FORM NO. 3318–419 EN

ENGLISH

TORO®

Recycler®

Walk-Behind Power Mower

Model No. 20441 — 5900001–6900001 & Up
Model No. 20442 — 5900001–6900001 & Up

Operator's Manual

IMPORTANT: Read this manual carefully. It contains information about your safety and the safety of others. Also become familiar with the controls and their proper use before you operate the product.

Introduction

Thank you for purchasing a Toro product.

All of us at Toro want you to be completely satisfied with your new product, so feel free to contact your local Authorized Service Dealer for help with service, genuine Toro parts, or other information you may require.

Whenever you contact your Authorized Service Dealer or the factory, always know the model and serial numbers of your product. These numbers will help the Service Dealer or Service Representative provide exact information about your specific product. You will find the model and serial number decal located in a unique place on the product as shown below.

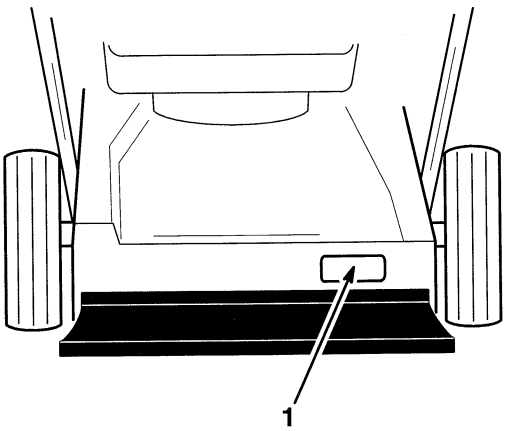

1064

1. Model and Serial Number Decal

For your convenience, write the product model and serial numbers in the space below.

Model No: _____

Serial No. _____

Read this manual carefully to learn how to operate and maintain your product correctly. Reading this manual will help you and others avoid personal injury and damage to the product. Although Toro designs, produces and markets safe, state-of-the-art products, you are responsible for using the product properly and safely. You are also responsible for training persons who you allow to use the product about safe operation.

The Toro warning system in this manual identifies potential hazards and has special safety messages that help you and others avoid personal injury, even death. DANGER, WARNING and CAUTION are signal words used to identify the level of hazard. However, regardless of the hazard, be extremely careful.

DANGER signals an extreme hazard that will cause serious injury or death if the recommended precautions are not followed.

WARNING signals a hazard that may cause serious injury or death if the recommended precautions are not followed.

CAUTION signals a hazard that may cause minor or moderate injury if the recommended precautions are not followed.

Two other words are also used to highlight information. "Important" calls attention to special mechanical information and "Note" emphasizes general information worthy of special attention.

The left and right side of the machine is determined by standing behind the handle in the normal operator's position.

⚠ WARNING: ⚠

The engine exhaust from this product contains chemicals known to the State of California to cause cancer, birth defects, or other reproductive harm.

©The Toro Company – 1995
All Rights Reserved

Printed in USA

Contents

	Page
Safety	2
Safe Operating Practices	2
Safety and Instruction Decals	5
Assembly	6
Handle	6
Before Starting	7
Oil Mix Ratio	7
Mixing Gasoline and Oil	7
Operation	9
Controls	9
Starting Engine	9
Stopping Engine	10
Self-propelled Drive	10
Pulling Mower Rearward	12
Adjusting Cutting Height	12
Recycling Tips	13
Adjusting Handle Height	14
Maintenance	15
Recommended Maintenance Schedule	15
Air Filter	16
Drain Gasoline	17
Spark Plug	17
Self-propelled Cable	17
Blade	18
Lubrication	20
Clean Mower Housing	20
Exhaust Ports	22
Troubleshooting	24
Storage	26
Fuel	26
Engine	26
Cleaning	26
General	27
Folding Handle	27
Removing From Storage	28
Warranty	Back Cover

Safety

This machine meets or exceeds CPSC blade safety requirements for walk-behind rotary mowers and the B71.1 specifications of the American National Standards Institute, in effect at time of production. However, improper use or maintenance by the operator or owner can result in injury. To reduce the potential for injury, comply with these safety instructions and always pay attention to the safety alert ⚠ symbol which means CAUTION, WARNING or DANGER—"personal safety instruction." Failure to comply with the instruction may result in personal injury.

Safe Operating Practices

This product is capable of amputating hands and feet and throwing objects. Always follow all safety instructions to avoid serious injury or death.

⚠ WARNING

POTENTIAL HAZARD
- **Engine exhaust contains carbon monoxide, which is an odorless, deadly poison.**

WHAT CAN HAPPEN
- **Carbon monoxide can kill you and is also known to the State of California to cause birth defects.**

HOW TO AVOID THE HAZARD
- **Do not run engine indoors or in an enclosed area.**

This mower is designed for cutting and recycling grass or, when equipped with a grass bag, for catching cut grass. Any use for purposes other than these could prove dangerous to user or bystanders.

Note: This engine is NOT equipped with a spark arrester muffler. Use or operation of this mower in the State of California on any forest-covered, brush-covered or unimproved grass-covered land, without an approved spark arrester muffler, is a violation of the law. Other states may have similar laws.

General Operation

1. Read this manual carefully before operating the mower. Become familiar with the controls and proper use of the mower. Never allow children under 16 years of age to operate the mower. Never allow adults to operate mower without proper instructions.

2. The operator of the mower is responsible for keeping everyone, especially children and pets, away from area of operation. The operator is responsible for accidents or hazards occurring to other people or their property.

3. Thoroughly inspect area where mower will be used and remove sticks, stones, wire, and debris that could be picked up and thrown by mower. Watch for foreign objects while mowing.

4. Wear long pants and substantial shoes. Do not operate mower while wearing open-toed shoes, jewelry, loose clothing or when barefoot.

5. Check fuel level before starting engine. Because fuel is highly flammable, handle it carefully.

   A. Use an approved fuel container.

   B. Fill fuel tank outdoors, not indoors. NEVER ADD FUEL TO AN ENGINE THAT IS RUNNING OR HOT.

   C. Install gas cap on fuel container and gas tank, and wipe up any spilled gasoline before starting engine.

D. Do not smoke while refueling.

6. Keep all guards, shields, safety devices, cover-deflector assembly, optional grass catcher, optional side discharge chute or optional discharge tunnel plug in place. Repair or replace damaged parts, including decals. Check all safety devices before each use.

7. Engine, blade and self–propelled drive (self-propelled model) are designed to stop when control bails are released. Ensure control and brake function properly before each use of mower.

8. Disengage the self-propelled mechanism or drive clutch (self-propelled model) before starting the engine.

9. Before using, always visually inspect to see that the blades, blade fasteners and cutter assembly are not worn or damaged. Replace worn or damaged blades and fasteners in sets to preserve balance.

While Operating

1. Do not run engine indoors.

2. Start the engine carefully according to instructions and with feet well away from the blade.

3. Always maintain secure footing. Keep a firm grip on the handle and walk; never run. Never operate mower in wet grass. Mow only in daylight or in good artificial light.

4. Mow across the face of slopes; never up and down. Use extreme caution when changing direction on slopes. Do not mow excessively steep slopes. Wear skid resistant shoes on slopes.

5. Always wear safety glasses or eye shields during operation to protect eyes from foreign objects that may be thrown from the machine.

6. Keep face, hands, and feet away from the mower housing and cutter blade when the engine is running. Blade can cause injury to hands and feet. Stay behind the handle until the engine stops.

7. Use extreme caution when reversing or pulling the mower towards you.

8. Since the blade rotates for a few seconds after the control bar is released, stay behind the handle until all moving parts stop.

9. After striking a foreign object or if mower vibrates abnormally, stop engine and remove wire from spark plug. Check mower for damage and make all repairs before using mower again. If major repairs are ever needed or if assistance is desired, contact your local Authorized TORO Service Dealer.

10. Stop the engine and wait for all moving parts to stop before adjusting the height-of-cut.

11. Stop the blade when pushing the mower outside the lawn area.

12. Stop engine before leaving the operator's position—behind the handle. Disconnect wire from spark plug if mower will be unattended.

13. Do not touch engine while it is running or shortly after it is stopped because engine will be hot enough to cause a burn.

14. Refuel only when engine is cool.

15. If mower must be lifted to be transported, turn off engine and stay behind the handle until all moving parts stop. Disconnect spark plug wire.

Maintenance And Storage

1. Perform only those maintenance instructions described in this manual. If major repairs are ever needed or if assistance is desired, contact your local Authorized TORO Service Dealer.

2. Before mower is cleaned, inspected, serviced, or adjusted, stop engine and disconnect wire from spark plug. Keep wire away from plug to prevent accidental starting.

3. To ensure the mower is in safe operating condition, frequently check and keep all nuts, bolts, and screws tight. Ensure blade bolt is tightened to 50 ft–lb (68 N·m).

4. When servicing blade, refer to blade maintenance section for correct installation and servicing procedures.

5. To reduce fire hazard, keep engine free of excessive grease, grass, leaves, and accumulations of dirt.

6. Allow engine to cool before storing mower in any enclosure. Do not store mower with gasoline in fuel tank near any open flame or where gasoline fumes may be ignited by a spark.

7. Do not overspeed the engine by changing governor settings.

8. At the time of manufacture, the mower conformed to the safety standards in effect for rotary mowers. To assure best performance and continued safety certification of the mower, use genuine TORO replacement parts and accessories. Replacement parts and accessories made by other manufacturers may result in non–conformance with the safety standards, and that could be dangerous.

Safety and Instruction Decals

Safety decals and instructions are easily visible to the operator and are located near any area of potential danger. Replace any decal that is damaged or lost.



ON MOWER HOUSING
(Part No. 39–5770)

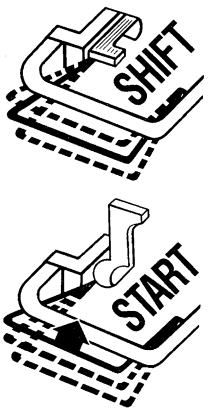

Self-propelled model only

ON TRACTION CONTROL LEVER
(Part No. 92–2292)



Self-propelled model only

ON TRACTION CONTROL LEVER
(Part No. 92–2280)

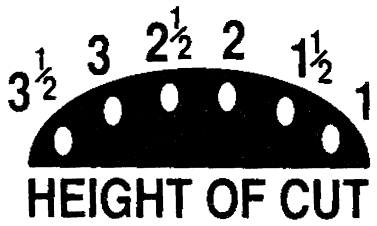

ON REAR HEIGHT ADJUSTER
(Part No. 92–2914 Right)
(Part No. 92–2915 Left)

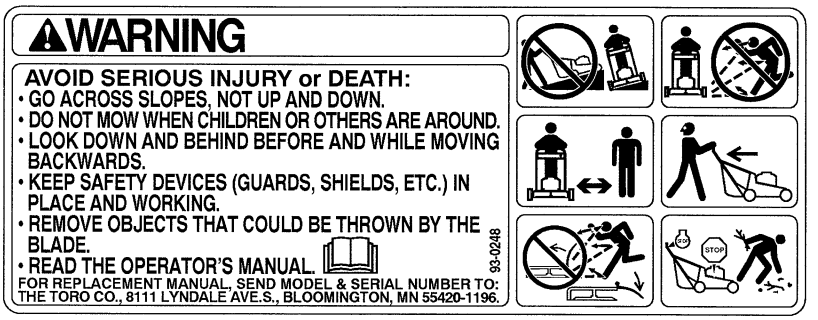

ON REAR OF MOWER HOUSING
(Part No. 93–0248)



ON DISCHARGE COVER
(Part No. 85–7060)

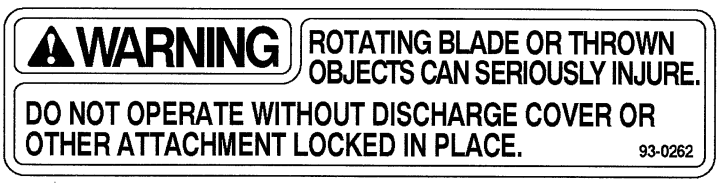

ON MOWER HOUSING
(Part No. 93–0262)

Assembly

Handle

Assembly

1. Loosen handle knobs and lift top handle half in an arc until handle halves are in line and nest together (Fig. 1).

   Note: Use care to prevent pinching or stretching of cables.

2. Tighten knobs securely.

3. Rotate handle toward rear of mower until it snaps into handle brackets (Fig. 1).

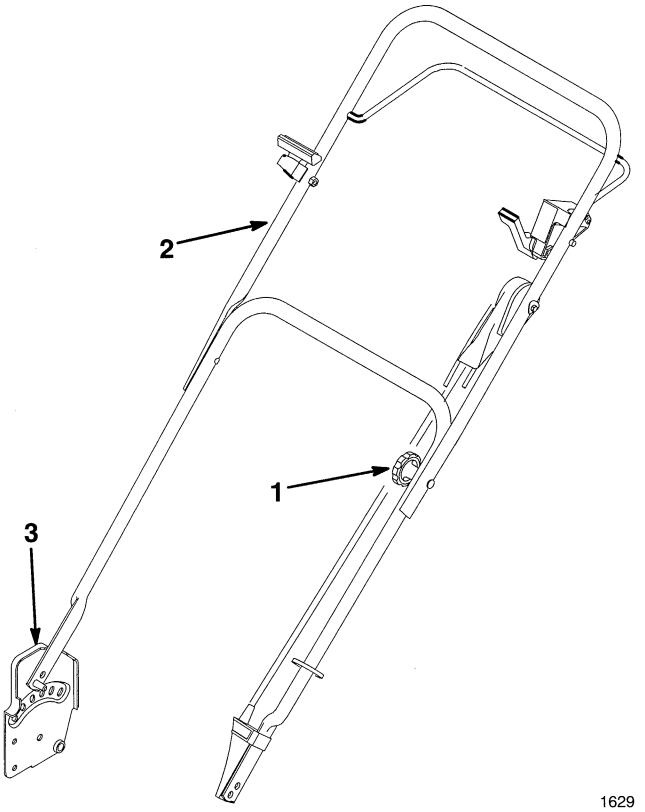

Figure 1

Self-propelled model

1. Knob
2. Top handle half
3. Handle bracket

Before Starting

Oil Mix Ratio

Your Toro mower is powered by a 2-cycle engine which requires a mixture of gasoline and oil; **32:1 with Toro 2-cycle premium ashless oil.** Failure to use the right mixture will result in serious engine damage.

Use Toro 2-cycle ashless oil which is available from your Toro retailer. Regular use of Toro 2-cycle ashless oil will help keep your engine clean, reduce spark plug fouling, piston ring sticking and pre-ignition. Toro 2-cycle ashless oil will also minimize varnish build-up, combustion chamber deposits and exhaust port blockage.

If Toro 2-cycle premium ashless oil is not available, other premium 2-cycle ashless oils can be substituted. Substitute oils may produce more exhaust smoke and require increased engine service including more frequent spark plug changes, exhaust port/cylinder decarbonizing and could reduce engine life.

Note: NEVER USE AUTOMOTIVE OIL (i.e. SAE 30, 10W30 etc.), OR THE WRONG MIX RATIO BECAUSE ENGINE DAMAGE MAY OCCUR. If engine failure occurs and it has been determined that Toro 2-cycle premium ashless oil was not used, the failure may not be covered the Toro warranty.

⚠ DANGER

POTENTIAL HAZARD
- **In certain conditions gasoline is extremely flammable and highly explosive.**

WHAT CAN HAPPEN
- **A fire or explosion from gasoline can burn you, others, and cause property damage.**

HOW TO AVOID THE HAZARD
- **Use a funnel and fill the fuel tank outdoors, in an open area, when the engine is cold. Wipe up any gasoline that spills.**
- **Do not fill the fuel tank completely full. Add gasoline to the fuel tank until the level is 1/4" to 1/2" (6 mm to 13 mm) below the bottom of the filler neck. This empty space in the tank allows gasoline to expand.**
- **Never smoke when handling gasoline, and stay away from an open flame or where gasoline fumes may be ignited by a spark.**
- **Store gasoline in an approved container and keep it out of the reach of children.**
- **Never buy more than a 30-day supply of gasoline.**

Mixing Gasoline and Oil

For simplicity and best engine performance, mix 8 ounces of Toro 2-cycle ashless oil with two gallons of fresh, unleaded regular gasoline. Pour one gallon of gasoline into an approved gasoline container and add the correct amount of 2-cycle oil. Install cap on gasoline container and shake to mix oil and gasoline thoroughly (Fig. 2). Slowly remove cap and add remaining gasoline.

Note: Do not mix gasoline and oil in the product fuel tank. Oil that is at room temperature mixes easily and more thoroughly than cold oil.

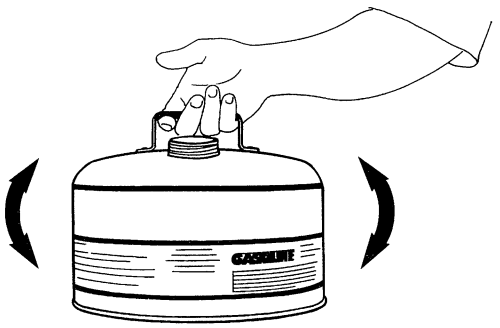

1682

Figure 2

Do not use gasoline that has been stored in an approved container from one season to the next. Use clean, fresh lead-free gasoline with an octane rating of 85 or higher. Purchase only the quantity of gasoline that can be used in 30 days to assure freshness. Use of lead-free gasoline results in fewer combustion chamber deposits and longer spark plug life. Leaded gasoline may be used if lead-free is not available.

Note: NEVER USE METHANOL, GASOLINE CONTAINING METHANOL, GASOHOL CONTAINING MORE THAN 10% ETHANOL, PREMIUM GASOLINE OR WHITE GAS BECAUSE ENGINE FUEL SYSTEM COULD BE DAMAGED.

1. Pull wire off spark plug wire (Fig. 3).

2. Clean around fuel cap before removing (Fig. 3). Fill fuel tank with gasoline/oil mix to within 1/4 inch (6.5 mm) of top of tank, not into filler neck. DO NOT OVER-FILL TANK. Reinstall fuel cap securely and wipe up any spilled fuel.

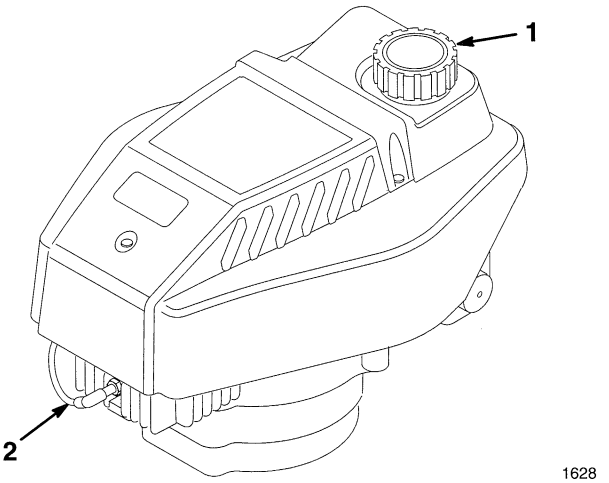

1628

Figure 3

1. Fuel tank cap
2. Spark plug wire

Toro recommends that Toro Stabilizer/Conditioner be used regularly during operation and storage. Toro Stabilizer/Conditioner cleans the engine during operation and prevents gum-like varnish deposits from forming in the engine during storage.

DO NOT USE FUEL ADDITIVES OTHER THAN THOSE MANUFACTURED FOR FUEL STABILIZATION DURING STORAGE, SUCH AS TORO STABILIZER/CONDITIONER OR A SIMILAR PRODUCT. TORO'S STABILIZER/CONDITIONER IS A PETROLEUM DISTILLATE BASED CONDITIONER/STABILIZER. TORO DOES NOT RECOMMEND STABILIZERS WITH AN ALCOHOL BASE SUCH AS ETHANOL, METHANOL OR ISOPROPYL. STABILIZERS SHOULD NOT BE USED TO TRY TO ENHANCE THE POWER OR PERFORMANCE OF MACHINE.

3. Connect spark plug wire (if disconnected) (Fig. 3).

Operation

Controls

Traction control lever (self–propelled model), throttle lever, control bar and recoil starter are on upper handle (Fig. 4).

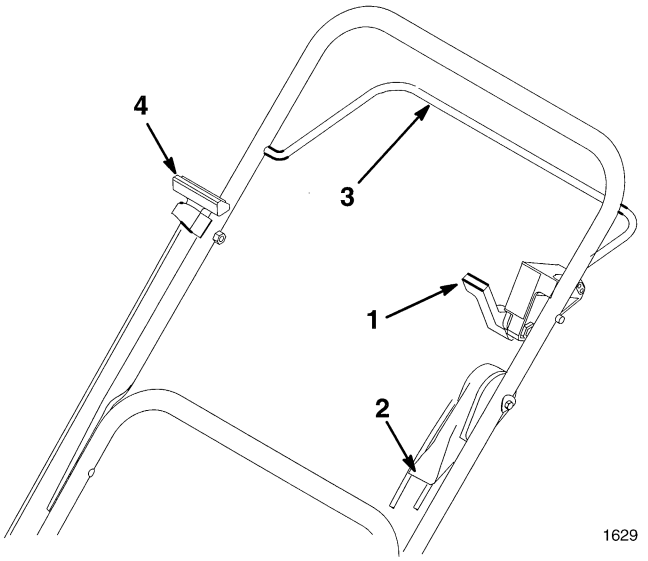

Figure 4

1. Traction control lever
2. Throttle lever
3. Control bar
4. Recoil starter

Starting Engine

1. Move throttle lever to 🐢 FAST position (Fig. 5).

2. SELF-PROPELLED MODELS ONLY–Move traction control lever forward (toward engine) (Fig. 8).

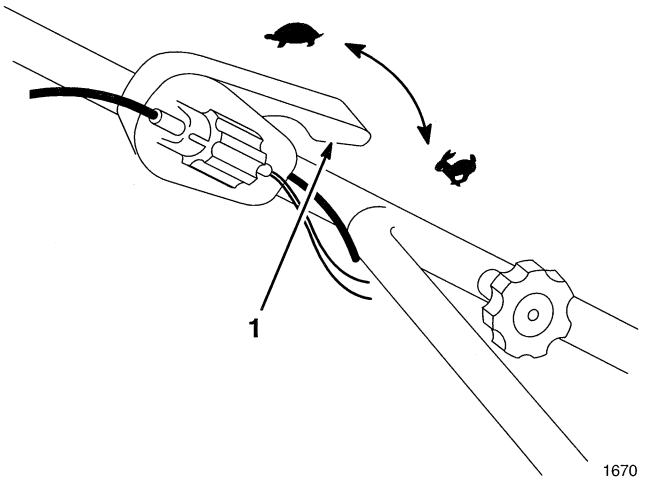

Figure 5

1. Throttle lever

3. Push primer three (3) times (Fig. 6). **<u>Wait</u> about two (2) seconds between each push.**

Note: Do not use primer to restart a warm engine after a short shutdown. However, cool weather may require priming to be repeated.

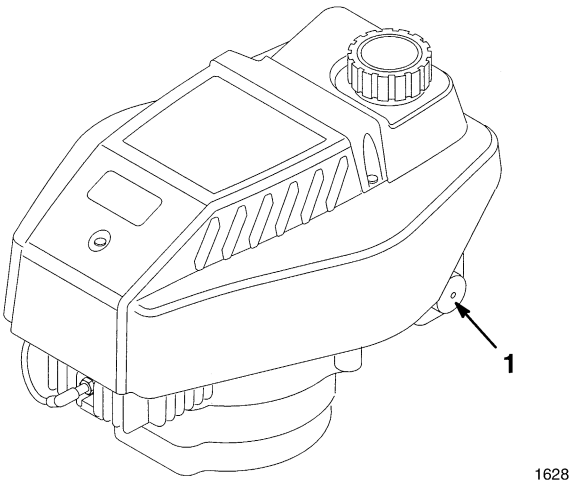

Figure 6

1. Primer

4. Squeeze control bar against handle (Fig. 7).

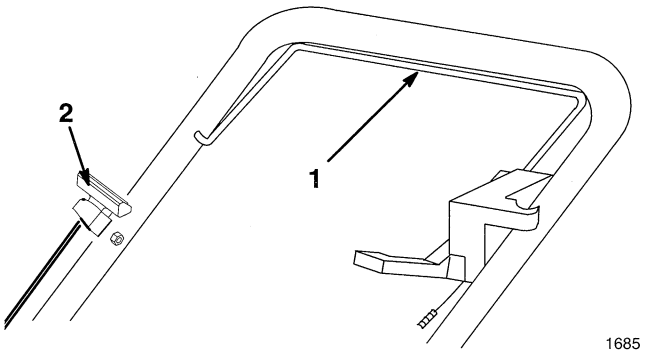

Figure 7

1. Control bar against handle
2. Recoil starter handle

5. Pull starter handle (Fig. 7) lightly until resistance is felt, then pull sharply. Let rope return to handle slowly.

   Note: If engine fails to start after three (3) pulls, repeat steps 2–4.

6. Regulate throttle as desired between (FAST) and (SLOW).

Stopping Engine

1. Release control bar. Engine, blade and traction will stop. See your dealer immediately if they do not. Stay behind the handle until all moving parts stop.

2. Pull wire off spark plug if mower will be unattended or not used.

To Restart Engine

1. Move throttle lever to FAST position and repeat steps 3 and 4 in STARTING ENGINE procedure.

2. If engine does not start after two attempts, repeat steps 2–4 in STARTING ENGINE procedure.

   Note: Do not use primer to restart a warm engine after a short shutdown.

Self-propelled Drive

(self-propelled models only)

1. Move traction control lever forward (toward engine) and squeeze control bar until it contacts handle (Fig. 8).

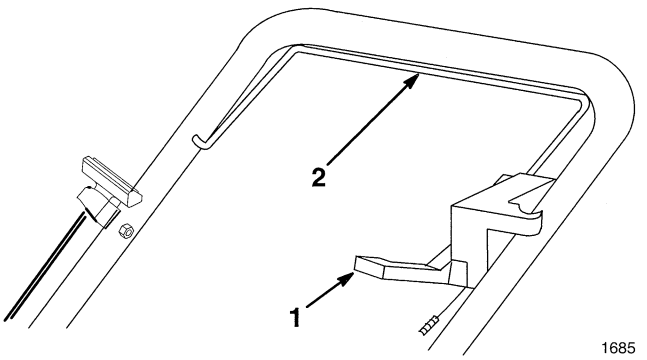

Figure 8

1. Traction control lever forward
2. Control bar against handle

2. Pull starter handle (Fig. 7) lightly until resistance is felt, then pull sharply. Let rope return to handle slowly.

3. Lower control bar halfway and move traction control lever backward (toward operator) (Fig. 9).

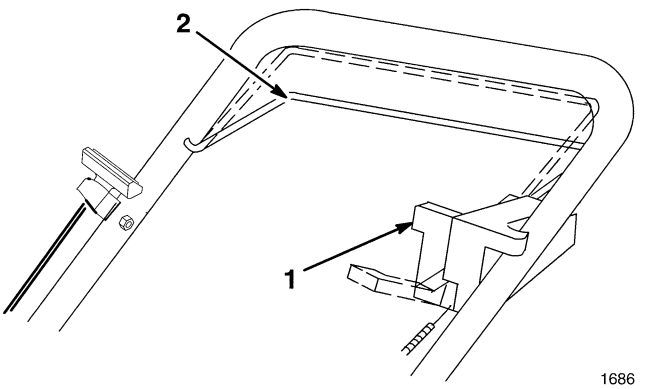

Figure 9

1. Traction control lever moved rearward
2. Control bar lowered halfway

4. Slowly squeeze control bar against handle to engage traction mechanism (Fig. 10).

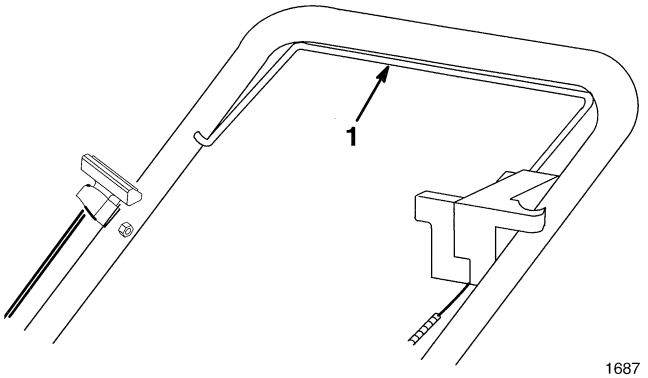

Figure 10

1. Control bar against handle

The mower is equipped with a single ground speed. However, the ground speed can be varied by increasing or decreasing the distance between the control bar and the handle. Lower the control bar to slow the mower when making a turn or if mower is moving too fast for you. If you lower the control bar too far, the safety mechanism will engage and the engine, traction and blade will stop. Squeeze the control bar closer to the handle to increase the ground speed. When the control bar is tight against the handle, the mower will self–propel at maximum ground speed.

5. To disengage self–propelled drive, lower control bar halfway and move traction control lever forward (toward engine) (Fig. 11).

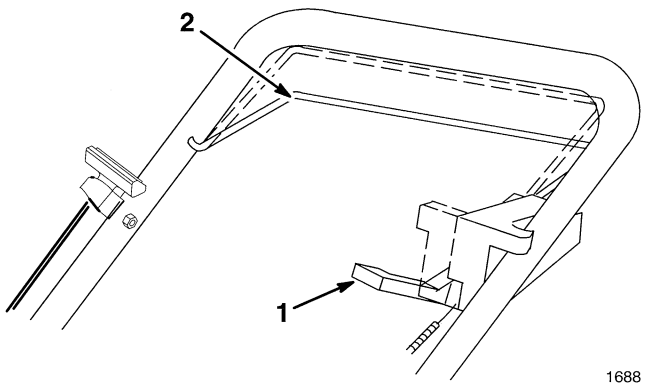

Figure 11

1. Traction control lever moved forward
2. Control bar lowered halfway

Pulling Mower Rearward

(self-propelled models only)

Your mower is equipped with free-wheeling clutches which make it easier to pull the mower rearward. The control bar must be lowered enough to disengage the self-propelled drive and disengage the clutches. The mower may need to be pushed forward one inch or more after control bar has been released to disengage the self-propelled drive and disengage the clutches.

For example, if you are approaching an object such as a tree or bush from which you want to pull back the mower, lower the control bar just enough to disengage the traction drive when the mower is about six inches away from the object. The momentum of the mower should carry it forward at least an inch which will disengage the clutches. Then you should be able to easily pull the mower rearward.

The self-propelled cable should be properly adjusted so that you can lower the control bar comfortably to stop the traction drive without stopping the engine. See Self-propelled Cable section in the Maintenance chapter for cable adjustment information. If you need help, see your Authorized Toro Service Dealer.

Adjusting Cutting Height

Each wheel is adjusted individually with a wheel height adjustment lever. Cutting heights are 1", 1-1/2", 2", 2-1/2", 3" and 3-1/2 inches (25, 38, 51, 64, 76 and 89 mm).

⚠ DANGER

POTENTIAL HAZARD
- **Adjusting height-of-cut levers could bring hands into contact with moving blade.**

WHAT CAN HAPPEN
- **Contact with rotating blade can cause serious injury.**

HOW TO AVOID THE HAZARD
- **Stop engine and wait for all movement to stop before adjusting cutting height.**
- **Do not put fingers under housing when adjusting height-of-cut.**

1. To change cutting height pull adjusting lever toward wheel and move to the desired position (Fig. 12).

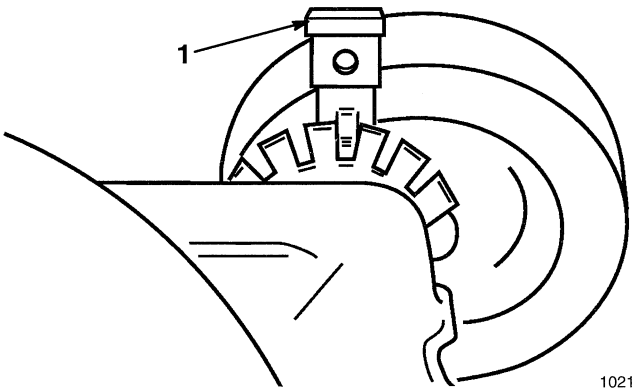

Figure 12

1. Wheel height adjustment lever

2. Release height adjust lever and seat securely in notch.

   Note: Set all four (4) wheels at the same height.

Recycling Tips

General Tips

Follow these instructions whether cutting grass or leaves for the best cutting results and lawn appearance:

- Maintain a **sharp blade** throughout the cutting season. Periodically file down nicks on blade.
- **Only mow dry grass or leaves.** Wet grass and leaves tend to clump on yard and may cause mower to plug or engine to stall. They may also be slippery to walk on and could cause you to slip and fall.

⚠ WARNING

POTENTIAL HAZARD
- **Wet grass or leaves can cause you to slip and contact blade.**

WHAT CAN HAPPEN
- **Blade contact can seriously injure you.**

HOW TO AVOID THE HAZARD
- **Mow only in dry conditions.**

- Set engine speed to fastest position. Maximum horsepower provides best cutting results.
- Clean clippings or leaves from underside of mower deck after each mowing.
- Keep engine in good running condition. Cutting and recutting requires more horsepower.
- Clean air filter more frequently. Cutting and recutting stirs up more clippings and dust which clogs the air filter and reduces engine performance.

Cutting Grass

- Grass grows at different rates at different times of the year. In the heat of summer, it is generally best to cut grass at the 2, 2.5 or 3 inch height-of-cut settings. Only about 1/3 of the grass blade should be cut off. Cutting below the 2 inch setting is not recommended unless grass is sparse or it is late fall when grass growth begins to slow down.
- When changing height-of-cut from the established setting (ex. 2", 2.5" or 3") to a new height, the grass may appear ragged or uneven until the grass adjusts to the new established height-of-cut and regains its normal appearance.
- When cutting grass over six inches tall, you may want to first mow using the highest height-of-cut setting and a slower walking speed; then mow again at a lower setting for best lawn appearance. If grass is too long and leaves clumps on top of lawn, mower may plug and cause engine to stall.
- Alternate mowing direction. This helps disperse clippings over lawn for even fertilization.

If the finished cut lawn appearance is unsatisfactory, try one or more of the following:

- Sharpen the blade.
- Walk at a slower pace while mowing.
- Raise the height-of-cut setting on your mower.
- Cut grass more frequently.
- Overlap cutting swaths instead of cutting a full swath with each pass.
- Set height-of-cut on front wheels one notch lower than rear wheels. (example: set front wheels at 2 inch setting and rear wheels at 2.5 inch setting)

Cutting Leaves

- When cutting is complete, always be sure that 50% of the lawn shows through the cut leaf cover. This may require one or more passes over the leaves.
- For light leaf coverage, position all wheels at the same height-of-cut setting.
- Walk at a slower mowing speed if leaves are not being cut up finely enough to be hidden down in the grass.
- If you cut up a lot of oak leaves, you might want to add lime to your grass in the spring. Lime reduces the acidity of oak leaves.

Adjusting Handle Height

The handle has two height adjustment positions. Select the handle height that is most comfortable for you.

1. Squeeze bottom handle sections together and slide off handle pins (Fig. 13).

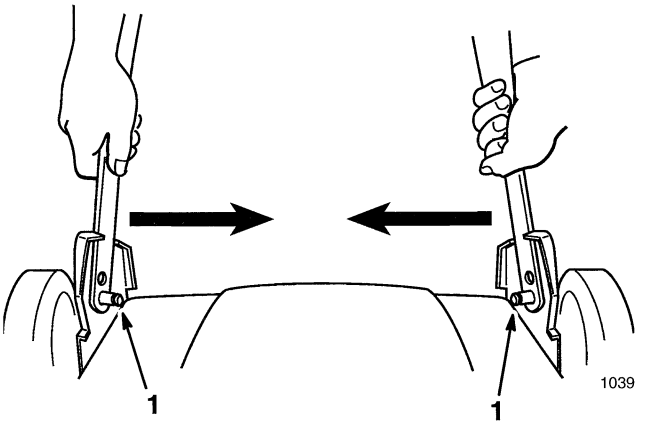

Figure 13

1. Handle pin

2. Reinsert handle pins through desired holes in lower handle section.

Self-propelled models only

1. When adjusting height, slide cable anchor on handle to align hole in cable anchor with desired hole in handle. Locate holes over pin inside handle bracket (Fig. 14).

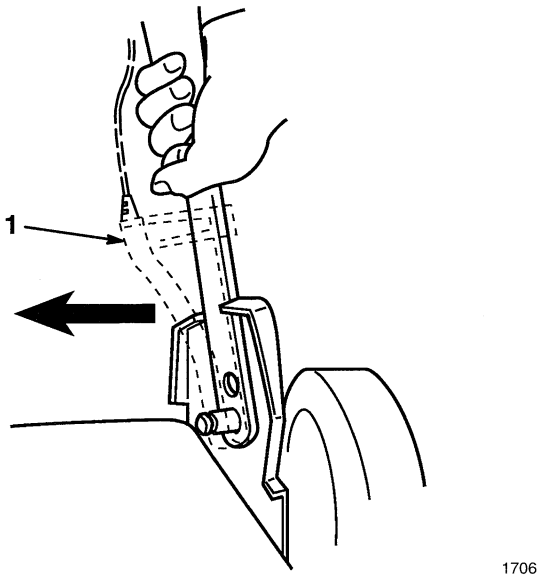

Figure 14

1. Cable anchor

2. Adjust self-propelled cable. See Maintenance section.

Maintenance

Continued safe and dependable operation requires routine maintenance.

Recommended Maintenance Schedule

Service Item	Service Operation	After every use	5 Hours	25 Hours	50 Hours	100 Hours
Housing	Clean built-up grass clippings and dirt.	X				
Fasteners	Check blade and engine mounting fasteners frequently. Keep all nuts, bolts and screws tight to be sure the mower is in safe working condition.		X			
Air Filter	Clean each mowing season or every 25 hours. **Clean more frequently if operating conditions are dusty.**			X		
Blade	Sharpen or replace; maintain more frequently if edge is dulled quickly in rough or sandy conditions.				X	
Blade Brake	Check stopping time every 50 hours or at start of each mowing season. Blade must stop within 3 seconds of releasing bail; if not see your Authorized Toro Service Dealer for repair.				X	
Lubrication	Grease rear height adjustor brackets (self-propelled models).				X	
Exhaust Ports	Clean every 50 hours or at least once each mowing season.				X	
Fuel System	Check for leakage and/or deterioration of fuel hose. Replace if necessary.				X	
Belt Cover	Remove and clean grass, clippings and debris from under cover.				X	
Spark Plug	Inspect and clean. Replace if necessary.			X		
Cooling System	Clean grass, clippings, debris or dirt that may clog engine air cooling fins and starter. Clean more frequently if operated under dirty or high chaff conditions.					X

⚠ CAUTION

POTENTIAL HAZARD
- **If you leave the wire on the spark plug, someone could start the engine.**

WHAT CAN HAPPEN
- **Accidental starting of engine could seriously injure you or other bystanders.**

HOW TO AVOID THE HAZARD
- **Pull wire off spark plug before you do any maintenance. Also push wire aside so it does not accidentally contact spark plug.**

Air Filter

Clean air filter once every season or every 25 hours; clean more frequently under dusty conditions.

IMPORTANT: Do not operate engine without air filter element; extreme engine wear or damage will occur.

1. Stop engine and pull wire off spark plug.
2. To remove air filter, snap cover latch open, swing to side and unhook (Fig. 15).

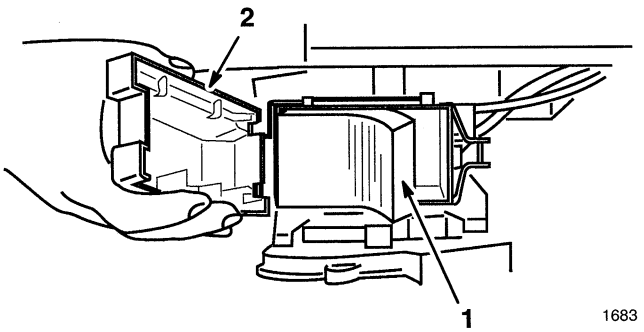

Figure 15

1. Filter 2. Cover

3. Remove cover and air filter.
4. Wash air filter in laundry detergent or kerosene (Fig. 16).
5. Squeeze filter to remove excess liquid and blot dry with a paper towel or rag.



Figure 16

6. Apply one tablespoon of SAE 30W oil to the air filter (Fig. 17).

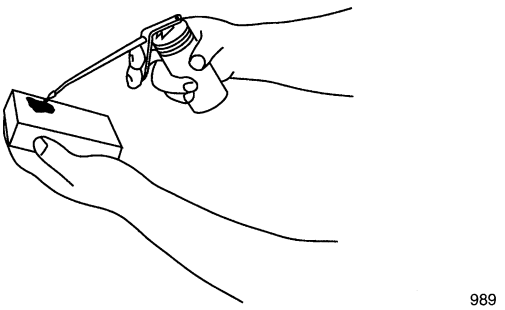

Figure 17

7. Squeeze until oil is distributed evenly throughout filter. Blot lightly with paper towel to remove excess oil.
8. Replace filter with cleaner side facing carburetor.

Note: Be sure filter is fully seated in air box and does not pucker, allowing direct passage of air and dirt.

Drain Gasoline

1. Stop engine and wait for engine to cool. Pull wire off spark plug.

   IMPORTANT: Drain gasoline from a cold engine only.

2. Remove cap from fuel tank and use a pump-type syphon to drain fuel into a clean gas can.

   Note: This is the only procedure recommended for draining fuel.

Spark Plug

Use a Champion RJ12C spark plug or equivalent. Correct air gap is 0.035" (0.89 mm). Remove plug after every 25 operating hours and check its condition.

1. Stop engine and pull wire off spark plug (Fig. 18).

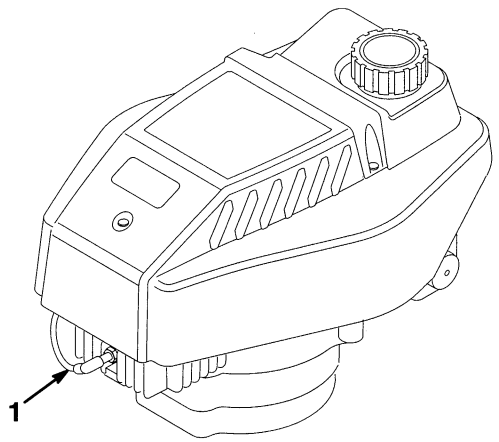

1628

Figure 18

1. Spark plug wire

2. Clean around spark plug and remove plug from cylinder head.

   IMPORTANT: Replace a cracked, fouled, or dirty spark plug. Do not sand blast, scrape, or clean electrodes because engine damage could result from grit entering cylinder.

3. Set air gap at 0.035" (0.89 mm) (Fig. 19). Install correctly gapped spark plug and gasket seal. Tighten plug firmly to 15 ft–lb (20 N·m).

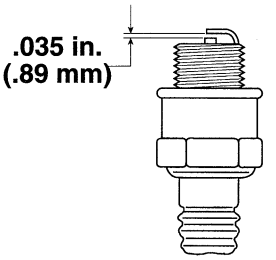

986

Figure 19

4. Reconnect spark plug wire when maintenance is completed.

Self-propelled Cable

(self–propelled models only)

If mower does not self-propel or has a tendency to creep forward when traction is not engaged, adjust traction control dial on upper handle (Fig. 20).

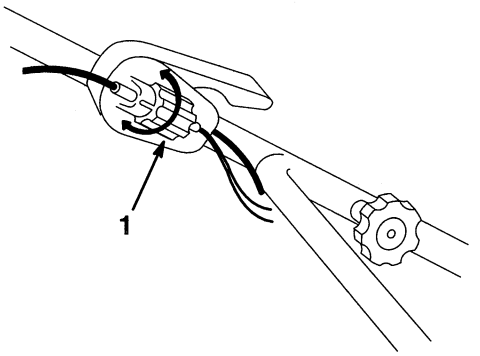

1670

Figure 20

1. Traction control dial

Note: Stand behind the handles in the operator's position to determine the correct direction to rotate traction control dial.

1. If mower creeps forward when traction drive is not engaged, rotate dial clockwise to loosen traction cable.

2. If mower does not self-propel, rotate control dial counterclockwise to tighten traction cable.

3. Adjustment is correct when:

   - mower does not creep forward when traction is disengaged
   - control bar is at a comfortable operating distance from the handle for operator's hand when disengaging and engaging the self-propelled drive

   Note: Do not overadjust cable. Cable should be just tight enough to make wheels turn when control bar is at a distance from the handle that is comfortable for operator's hand. Overadjusting may require excessive operator effort to engage or disengage self-propelled drive.

If you need help, see your Authorized Toro Service Dealer.

Blade

A straight, sharp blade provides maximum cutting performance. Regularly inspect and sharpen blade.

⚠ WARNING

POTENTIAL HAZARD
- **Blade is sharp.**

WHAT CAN HAPPEN
- **Contact with sharp blade can cause serious personal injury.**

HOW TO AVOID THE HAZARD
- **Wear gloves or wrap sharp edges of the blade with a rag.**

1. Stop engine and pull wire off spark plug (Fig. 18).

2. Drain gasoline from fuel tank. See Drain Gasoline section.

⚠ WARNING

POTENTIAL HAZARD
- **Gasoline is extremely flammable, highly explosive and under certain conditions can cause personal injury or property damage.**

WHAT CAN HAPPEN
- **Tipping mower may cause fuel leakage from carburetor or fuel tank.**

HOW TO AVOID THE HAZARD
- **Avoid fuel spills by running engine dry or remove gas with hand pump, never siphon.**

3. Tip mower on its right side (Fig. 21). Avoid rotating the blade because starting problems may result.

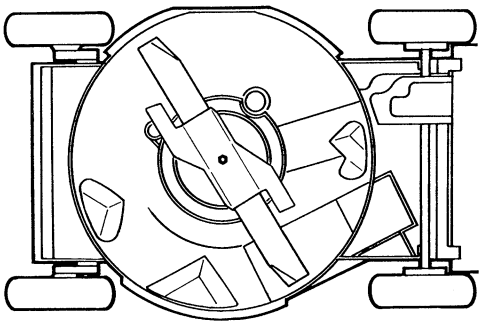

757

Figure 21

4. INSPECTING BLADE—Carefully examine blade for sharpness and wear, especially where flat and curved parts meet (Fig. 22A). Since sand and abrasive material can wear away the metal that connects the flat and curved parts of the blade, check blade before using the mower. If a slot or wear is noticed, (Fig. 22B & C), replace blade. Refer to step 5.

   Note: For best performance, install new blade before cutting season begins. During the year, file down small nicks to maintain the cutting edge.

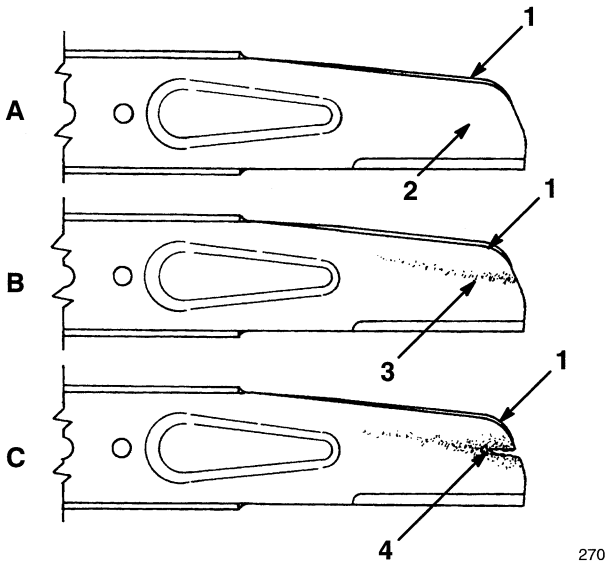

Figure 22

1. Sail
2. Flat part of blade
3. Wear
4. Slot formed

DANGER

POTENTIAL HAZARD

- **A worn or damaged blade could break and a piece of blade could be thrown into operator's or bystander's area.**

WHAT CAN HAPPEN

- **A thrown piece of blade could cause serious personal injury or death to operator or bystanders.**

HOW TO AVOID THE HAZARD

- **Inspect blade periodically for wear or damage.**
- **Replace a worn or damaged blade.**

5. REMOVING BLADE—Grasp end of blade using a rag or thickly padded glove. Remove blade bolt, lockwasher, blade accelerator, blade and retainer (Fig. 23).

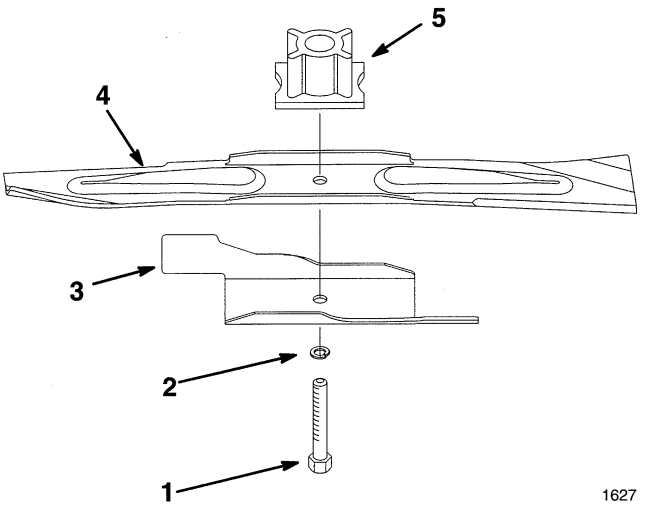

Figure 23

1. Blade bolt
2. Lock washer
3. Accelerator
4. Blade
5. Retainer

6. SHARPENING BLADE—Using a file, sharpen top side of blade and maintain original cutting angle (Fig. 24). The blade will remain balanced if same amount of material is removed from both cutting edges.

   IMPORTANT: Check balance of blade by putting it on a blade balancer. An inexpensive balancer can be purchased at a hardware store. A balanced blade stays in a horizontal position and an unbalanced blade settles to the heavy side. If blade is not balanced, file more metal off cutting edge on heavy end of blade.

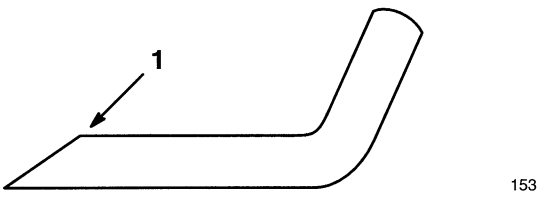

Figure 24

1. Sharpen at this angle only

⚠ WARNING

POTENTIAL HAZARD
- **When sharpening blade, pieces of blade could be accidentally thrown.**

WHAT CAN HAPPEN
- **Thrown objects can cause serious eye injury.**

HOW TO AVOID THE HAZARD
- **Wear proper eye protection when sharpening blade.**

7. Install retainer, sharp, balanced TORO blade, blade accelerator, lockwasher, and blade bolt. Sail part of blade must point toward top of mower housing to ensure correct installation. Tighten the blade bolt to 50 ft–lb (68 N·m).

⚠ WARNING

POTENTIAL HAZARD
- **Operating mower without accelerator in place could cause blade to flex, bend or break.**

WHAT CAN HAPPEN
- **A broken blade could cause serious injury or death to operator or bystanders.**

HOW TO AVOID THE HAZARD
- **Do not operate mower without accelerator.**

Lubrication

Rear Height Adjustors

(self–propelled models only)

1. Wipe grease fittings on rear height-of-cut adjustors (Fig. 25) with a clean rag.

2. Install grease gun onto fitting and gently apply 1 or 2 pumps of #2 multi-purpose lithium grease. Excess grease may damage seals and prevent proper wheel clutch operation.

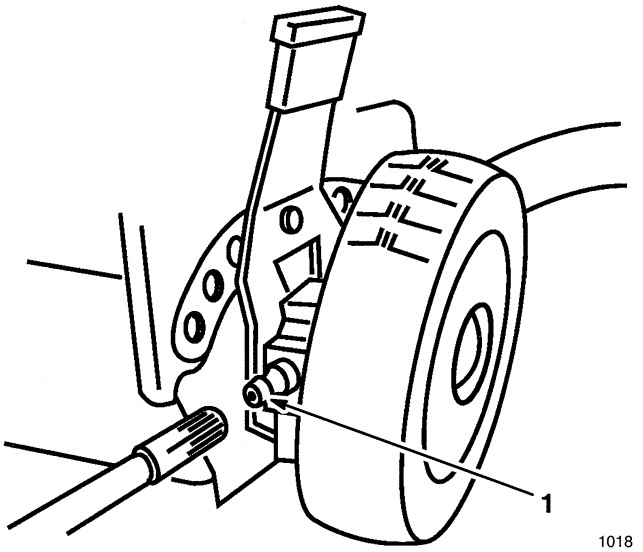

Figure 25

1. Grease fitting

Clean Mower Housing

Underside of Mower Housing

To ensure best performance, keep underside of mower housing clean. Be especially careful to keep kickers free of debris (Fig. 26).

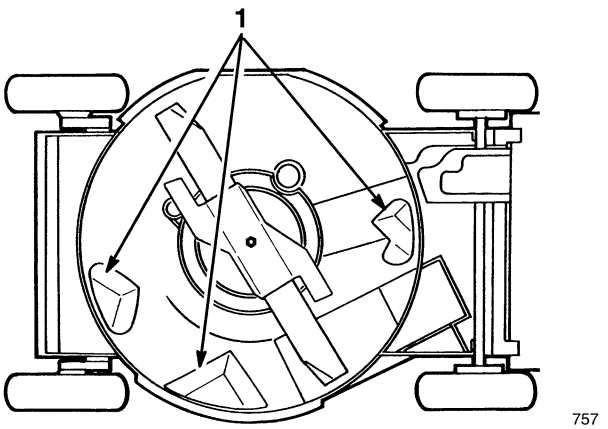

Figure 26

1. Kickers

Washing Method

Whenever the underside of the mower requires cleaning, follow this procedure for washing debris out from under deck.

1. Position mower on a flat, concrete or asphalt surface near a garden hose.
2. Start the engine.
3. Hold the running garden hose at handle level and direct water to flow on ground just in front of right rear tire (Fig. 27). The rotating blade will draw water under the housing and wash out clippings. Let the water run for a few minutes or until you no longer see clippings being washed out from under housing.

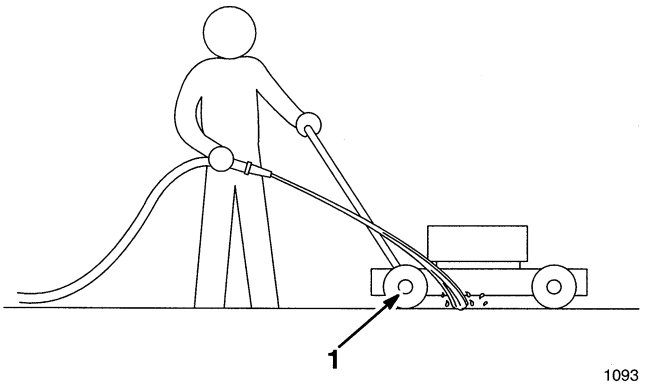

Figure 27

1. Rear right wheel

4. Stop the engine.
5. Turn off the garden hose.
6. Restart mower and let it run for a few minutes to dry out moisture on the mower and its components. While the engine is running, engage and disengage the traction drive several times to dry it out.

Scraping Method

If washing does not remove all debris from under deck, tip mower and scrape it clean.

1. Pull wire off spark plug.
2. Drain gasoline from fuel tank. See Drain Gasoline section.

⚠ WARNING

POTENTIAL HAZARD

- **Gasoline is extremely flammable, highly explosive and under certain conditions can cause personal injury or property damage.**

WHAT CAN HAPPEN

- **Tipping mower may cause fuel leakage from carburetor or fuel tank.**

HOW TO AVOID THE HAZARD

- **Avoid fuel spills by running engine dry or remove gas with hand pump, never siphon.**

3. Tip mower on its right side (Fig. 26).
4. Remove dirt and grass clippings with a hardwood scraper. Avoid burrs and sharp edges.
5. Turn mower upright.
6. Refill gas tank.
7. Reconnect spark plug wire.

Belt Cover

(self–propelled models only)

Keep area under belt cover free of debris.

1. With engine turned off, remove bolt securing belt cover (Fig. 28) to mower housing.

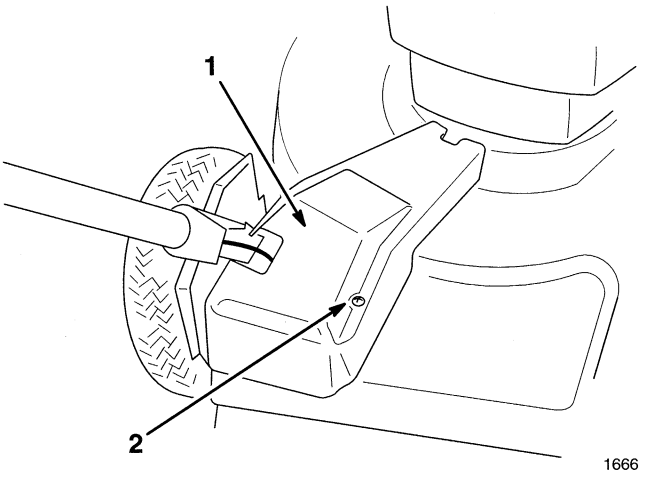

Figure 28

1. Belt cover
2. Bolt

2. Lift off cover and brush out all debris from belt area.

3. Reinstall belt cover.

Exhaust Ports

Carbon deposit build-up causes excessive wear and loss of power. Check and clean if necessary.

1. Pull wire off spark plug.

2. Drain gasoline from fuel tank. See Drain Gasoline section.

⚠ WARNING

POTENTIAL HAZARD

- **Gasoline is extremely flammable, highly explosive and under certain conditions can cause personal injury or property damage.**

WHAT CAN HAPPEN

- **Tipping mower may cause fuel leakage from carburetor or fuel tank.**

HOW TO AVOID THE HAZARD

- **Avoid fuel spills by running engine dry or remove gas with hand pump, never siphon.**

3. Tip mower on its right side.

4. Remove blade bolt, lockwasher, blade accelerator, blade and retainer (Fig. 29).

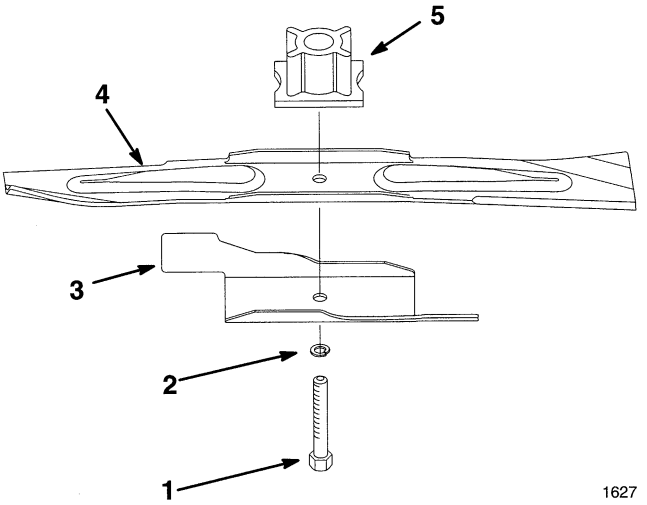

Figure 29

1. Blade bolt
2. Lock washer
3. Accelerator
4. Blade
5. Retainer

5. Remove bolts attaching muffler and crankshaft support (Fig. 30).

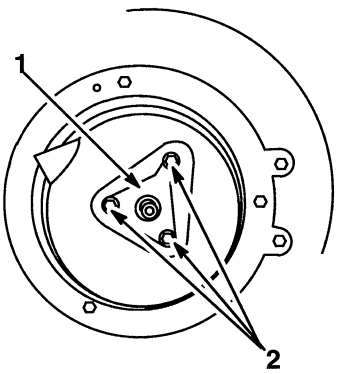

Figure 30

1. Crankshaft support
2. Bolts

6. Rotate crankshaft slowly until piston covers exhaust ports (Fig. 31).

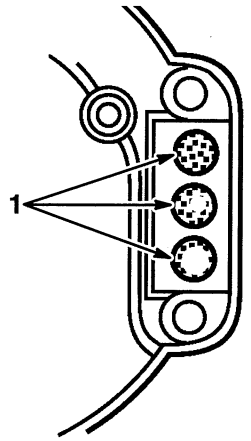

1030

Figure 31

1. Exhaust ports

7. Using a 3/8 inch wooden dowel loosen carbon deposits by inserting dowel into ports.

   Note: Do not use metal tools; they could scratch piston.

8. Set mower upright.

9. Holding control bar against handle pull starter rope several times to blow out loose carbon (Fig. 32).

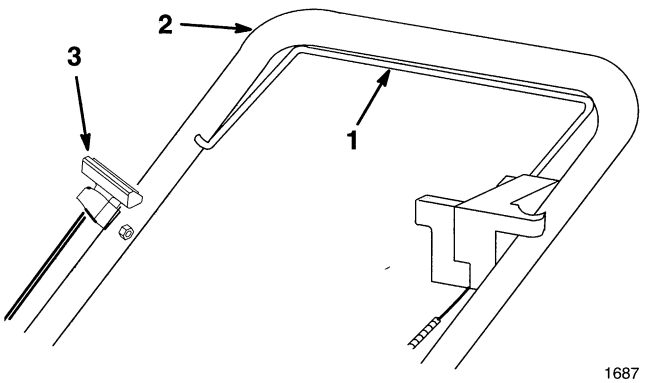

1687

Figure 32

1. Control bar
2. Upper handle
3. Starter handle

10. Clean carbon deposits from muffler and tube with wire brush and wood dowel (Fig. 33). Wipe muffler clean with paper towel or rag.

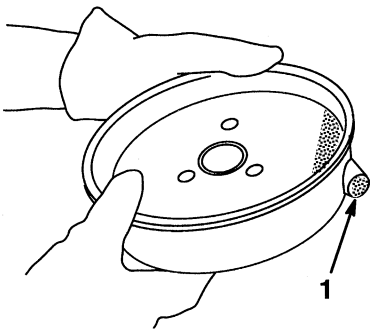

998

Figure 33

1. Tube

11. Tip mower on its right side.

12. Reinstall muffler and crankshaft support to engine mounting plate (Fig. 34).

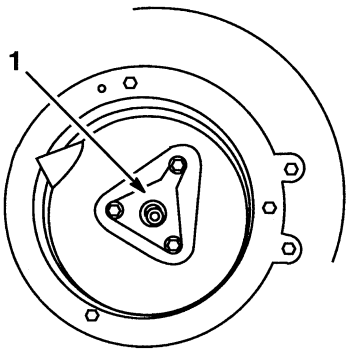

992

Figure 34

1. Crankshaft support

   Note: Crankshaft support must have equal clearance around crankshaft circumference to prevent contact with crankshaft.

13. Torque muffler bolts to 13 ft.–lbs. (18 N·m).

14. Reinstall retainer, blade, blade accelerator, lockwasher and blade bolt.

15. Tighten the blade bolt to 50 ft–lb (68 N·m).

16. Set mower upright.

17. Refill gas tank.

18. Connect spark plug wire when maintenance is completed.

Troubleshooting

Your mower was designed and built for trouble-free operation. Check the following components and items carefully. If a problem continues, see your Authorized Toro Service Dealer.

PROBLEM	CORRECTIVE ACTION
Engine will not start	1. Fill fuel tank with fresh gasoline 2. Move throttle lever to the FAST position 3. Press primer three (3) times 4. Spark plug • Connect spark plug wire • Clean spark plug, check spark plug gap, replace if damaged
Engine starts hard or loses power	1. Drain and refill fuel tank with fresh gasoline 2. Clean gas cap vent hole 3. Clean air filter element 4. Clean underside of mower deck 5. Clean spark plug, check spark plug gap, replace if damaged
Engine runs rough	1. Connect spark plug wire 2. Clean spark plug, check spark plug gap, replace if damaged 3. Move throttle lever from SLOW to FAST position 4. Clean air filter element
Mower or engine vibrates excessively	1. Balance blade. Or if blade is bent, straighten it. 2. Tighten blade mounting bolt 3. Clean mower discharge chute 4. Clean underside of mower deck 5. Tighten engine mounting bolts
Uneven cutting pattern	1. Place all four (4) wheels at same height 2. Sharpen and balance blade 3. Change mowing pattern 4. Clean underside of mower deck

PROBLEM	CORRECTIVE ACTION
Discharge chute plugs	1. Move throttle lever from SLOW to FAST position 2. Raise cutting height 3. Slow down 4. Allow grass to dry before mowing 5. Clean underside of mower deck
Will not self-propel	1. Adjust self-propelled cable 2. Clean debris from under belt cover.

Storage

To prepare lawn mower for off-season storage perform recommended maintenance procedures. See MAINTENANCE chapter.

Store mower in a cool, clean, dry place. Cover mower to keep it clean and protected.

Fuel

⚠ WARNING

POTENTIAL HAZARD
- **Gasoline can vaporize if stored over long periods of time.**

WHAT CAN HAPPEN
- **Vaporized fuel can explode if it comes into contact with open flame.**

HOW TO AVOID THE HAZARD
- **Do not store gasoline (fuel) over long periods of time.**
- **Do not store mower with fuel in the tank in an enclosure with an open flame. (Example: furnace or water heater pilot light.)**
- **Allow the engine to cool before storing in any enclosure.**

For long term storage, either drain gasoline from fuel tank or use a fuel additive before storing. To drain gasoline, see Drain Gasoline section. After fuel is drained, start engine and let it idle until all fuel is consumed and engine stops. Repeat the starting procedure two more times to ensure all gas is removed from the engine. If gasoline is not drained, gum-like varnish deposits will form and cause poor engine operation, even starting problems.

Note: If engine is operating on oxygenated or reformulated gasoline (gasoline blended with an alcohol or an ether), remove all fuel from tank and run engine until it stops from lack of fuel before storing.

Fuel can be left in gas tank only if a fuel additive, such as Toro's Stabilizer/Conditioner, is added to gasoline before storing. Toro's Stabilizer/Conditioner is a petroleum distillate based conditioner/stabilizer. Toro does not recommend stabilizers with an alcohol base, such as ethanol, methanol or isopropyl. Use fuel additive in recommended quantities as specified on container.

Engine

1. Remove spark plug. Using an oil can, squirt about one tablespoon of oil through spark plug hole (Fig. 35).
2. Slowly rotate engine several times, using starter rope, to distribute oil.

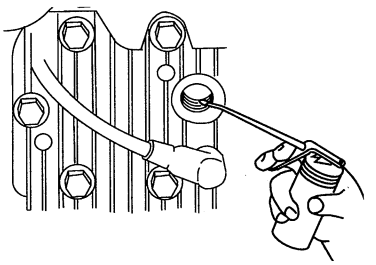

1009

Figure 35

3. Reinstall spark plug but DO NOT connect spark plug wire.

Cleaning

1. Clean mower housing. See Clean Mower section in Maintenance chapter.
2. Clean dirt and chaff from cylinder, cylinder head fins, and blower housing. Also remove grass clippings, dirt, and grime from external parts of the engine, shrouding, and top of mower housing.

3. Clean air filter. See Air Filter section in Maintenance chapter.

General

1. Check condition of blade. See Blade section in Maintenance chapter.
2. Tighten all nuts, bolts, and screws.
3. Lubricate the wheels. See Lubrication section in Maintenance chapter.
4. Touch up all rusted or chipped paint surfaces. Toro Re–Kote paint is available from an Authorized TORO Service Dealer.

Folding Handle

1. Push in right bottom handle section until handle slides past stops of handle brackets (Fig. 36).

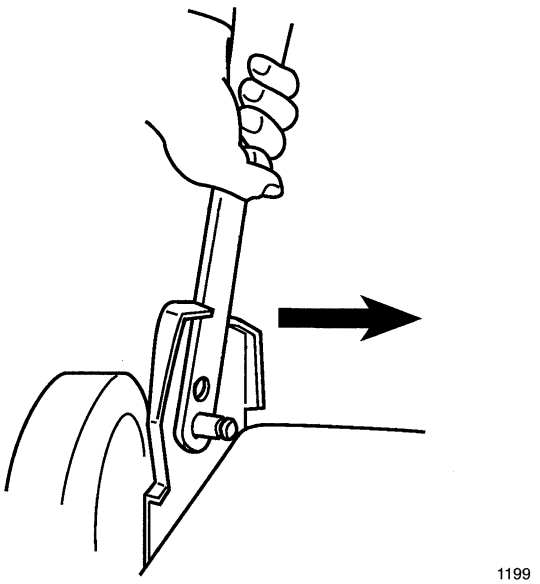

1199

Figure 36

2. Rotate handle toward front of mower (Fig. 38).
3. For short term storage, place handle in position shown in Figure 37.

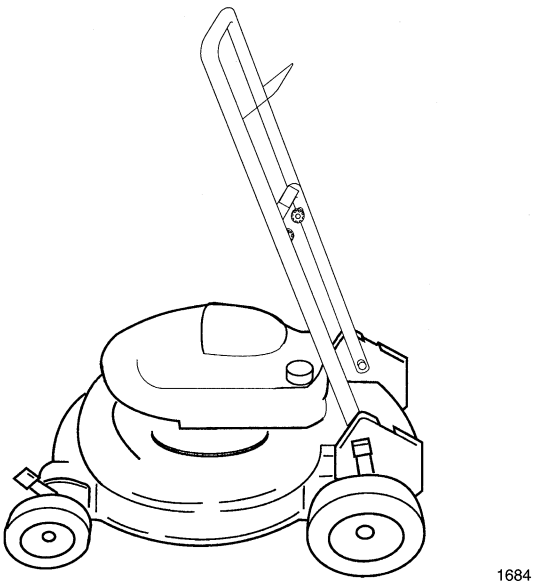

1684

Figure 37

4. For long term storage, fold handle as shown in Figure 38.

   Note: Fold handle only as illustrated. If handle is folded in opposite direction damage will occur to control cables.

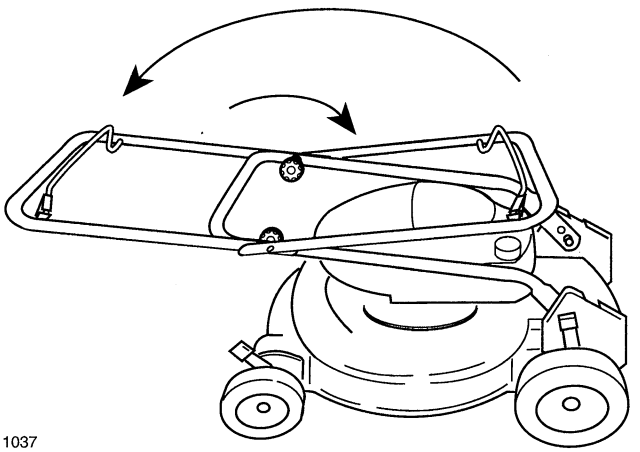

1037

Figure 38

5. Loosen knobs securing top handle section to bottom section and fold top handle section back towards rear of mower into storage position.

Removing From Storage

1. Unfold handle. See handle assembly instructions in ASSEMBLY section

2. Check and tighten all fasteners.

3. Remove spark plug (Fig. 39) and spin engine rapidly using starter to blow excess oil from the cylinder. Clean spark plug or replace if cracked, broken or electrodes are worn.

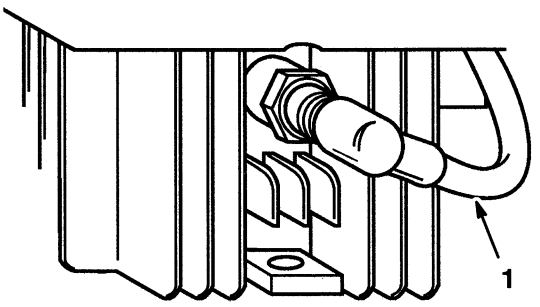

Figure 39

1. Spark plug wire

4. Install spark plug and torque to 15 ft.-lbs. (20 N·m).

5. Perform recommended maintenance procedures. See MAINTENANCE section.

6. Fill fuel tank (Fig. 40) with fresh, clean gasoline mix.

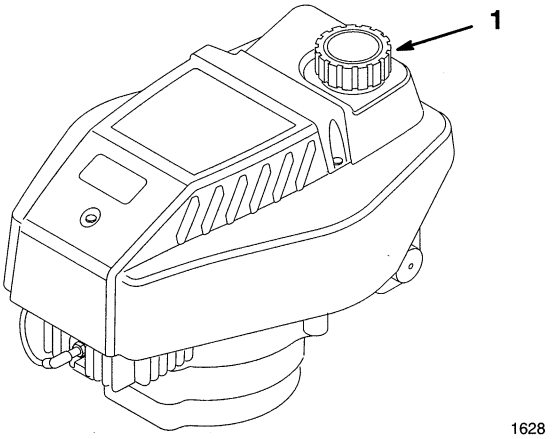

Figure 40

1. Fuel tank cap

7. Reconnect spark plug wire (Fig. 39).


TORO®

TORO Walk Mowers

THE TORO PERFORMANCE WARRANTY

A Full Warranty
(Limited Warranty for Commercial Use)

What Is Covered By This Express Warranty?

The Toro Company promises to repair any TORO Product used for normal residential purposes* if defective in materials or workmanship or if it stops functioning due to the failure of a component. The following time periods apply from the date of purchase:

- Super Recycler® Walk Mowers . 5 year full warranty
- All Others ..... 2 year full warranty

The cost of parts and labor is included, but the customer pays the transportation costs.

What Products Are Covered By This Warranty?

This warranty applies to all gasoline powered consumer walk power mowers. Riding products and wide area walk behind mowers are covered by separate warranty statements.

How About Commercial Use?

TORO Consumer Products used for commercial, institutional or rental use are warranted against defects in material or workmanship. Components failing due to normal wear are not covered by this warranty. The following time periods apply from the date of purchase:

Products	Warranty Period
• 21" Commercial Duty Walk Mowers	1 year limited warranty
• All Others	45 day limited warranty

How Do You Get Warranty Service?

Should you feel your TORO Product requires warranty service, contact the dealer who sold you the product or any Authorized TORO Service Dealer or TORO Master Service Dealer. The Yellow Pages of your telephone directory is a good reference source. The dealer will either arrange service at his/her dealership or recommend another Authorized Service Dealer who may be more convenient. You may need proof of purchase (copy of registration card, sales receipt, etc.) for warranty validation.

If for any reason you are dissatisfied with the Service Dealer's analysis of the defect in materials or workmanship or if you need a referral to a TORO Service Dealer, please feel free to contact us at the following address:

Toro Customer Service Department
8111 Lyndale Avenue South
Bloomington, MN 55420–1196
612–888–8801
800–348–2424

What Must You Do To Keep The Warranty In Effect?

You must maintain your TORO Product by following the maintenance procedures described in the operator's manual. Such routine maintenance, whether performed by a dealer or by you, is at your expense.

What Does This Warranty Not Cover? and How Does Your State Law Relate To This Warranty?

There is no other express warranty except the TORO Starting Guarantee on GTS Engines. This express warranty does not cover:

- Cost of regular maintenance service or parts, such as filters, fuel, lubricants, oil changes, spark plugs, blade sharpening, blade worn out, cable/linkage adjustments or brake and clutch adjustments.

- Any product or part which has been altered or misused or required replacement or repair due to accidents or lack of proper maintenance.

- Repairs necessary due to improper fuel, contaminants in the fuel system, or failure to properly prepare the fuel system prior to any period of non–use over three months.

- Pickup and delivery charges.

All repairs covered by this warranty must be performed by an Authorized TORO Service Dealer using Toro approved replacement parts.

Repair by an Authorized TORO Service Dealer is your sole remedy under this warranty.

The Toro Company is not liable for indirect, incidental or consequential damages in connection with the use of the TORO Products covered by this warranty, including any cost or expense of providing substitute equipment or service during reasonable periods of malfunction or non–use pending completion of repairs under this warranty. Some states do not allow exclusions of incidental or consequential damages, so the above exclusion may not apply to you.

This warranty gives you specific legal rights, and you may also have other rights which vary from state to state.

* Normal residential purposes means mowing the lawn on the same lot as your home. Use at more than one location is considered commercial use and the commercial use warranty would apply.

COUNTRIES OTHER THAN THE UNITED STATES OR CANADA

Customers who have purchased TORO products exported from the United States or Canada should contact their TORO Distributor (Dealer) to obtain guarantee policies for your country, province, or state. If for any reason you are dissatisfied with your Distributor's service or have difficulty obtaining guarantee information, contact the TORO importer. If all other remedies fail, you may contact us at The Toro Company.