Form No. 3393-517 Rev A

TORO®

Count on it.

Parts Catalog

MH-400EH2 Material Handler

Model No. 44954—Serial No. 315000001 and Up

Register at www.Toro.com.
Original Instructions (EN)

CE

3393-517 A

Ordering Replacement Parts

To order replacement parts, please supply the part number, the quantity, and the description of each part desired.

Understanding Reference Numbers

Each identified part in an illustration has a reference number. The reference number for a part also appears in the parts list, along with other information about the part.

This catalog uses two special reference number formats, one to indicate parts in a service assembly and another to indicate the quantity of a given part in an illustration.

Service Assembly Reference Numbers

Parts in service assemblies have reference numbers in the form a:b. The a represents the reference number of the entire service assembly and the b represents a sequential number unique to each part within the service assembly.

For example, a wheel assembly might be identified by reference number 6, the tire by 6:1, the valve by 6:2, and the wheel by 6:3. When you order the assembly identified by reference number 6, you receive all parts identified by reference numbers 6:1,6:2, and 6:3. However, you may also order any part individually. Reference numbers of this type appear in illustration and in parts lists.

Reference Numbers Indicating Quantity

In an illustration, if a reference number indicates more than one part, the reference number has the form nX y. The n represents the quantity of the part, the X is the multiplication symbol, and the y represents the reference number.

For example, in an illustration, the reference number 2X 37 means that two of the parts identified by reference number 37 are indicated.

List of Abbreviations

AR: as required

ASM: assembly

BBC: blade brake control

BHTF: button head thread forming

CARR: carriage

CCW: counter clockwise

CW: clockwise

DEG: degrees

DPA: Dual Point Adjustment

ECM: electronic control module

EXT: external

FH: flat head

GA: gauge

HD: heavy-duty

HF: hex flange

HH: hex head

HHF: hex head flange

HHFTF: hex head flange thread forming

HJ: hex jam

HLH: hex lag head

HOC: height-of-cut

HP: high pressure

HSBH: hex socket button head

HSFH: hex socket flat head

HSH: hex socket head

HWH: hex washer head

HWHTF: hex washer head thread forming

HYD: hydraulic

LH: left hand

LP: low pressure

LPG: Liquefied Petroleum Gas

NI: nylon insert

NPTF: national pipe thread fine

PFH: phillips flat head

PPH: phillips pan head

PPHTF: phillips pan head thread forming

PRH: phillips round head

PTH: phillips truss head

PTO: power-take-off

RH: right hand

ROPS: roll-over protection system

RRB: rear roller brush

SFH: slotted fillister head

SHH: slotted hex head

SHWH: slotted hex washer head

SPH: slotted pan head

SQH: square head

SRH: slotted round head

STD: standard

TAP: self tapping

TTH: torx truss head

Contents

Box Frame Assembly 4
Box Frame Decal Assembly No. 120-0890 5
Attachment Clamp Assembly No. T36015800 6
Guard Assembly 7
Hitch Assembly 8
Belt and Skirting Assembly 9
Skirting Assembly 10
Conveyor Assembly 11
Chain Drive Assembly 12
Chain and Sprocket Assembly 13
Wheel and Frame Assembly 14
RH Shaft Assembly No. 120-9401 15
LH Brake Assembly No. 120-9437 16
Hub Assembly No. 120-9404 17
LH Shaft Assembly No. 120-9402 18
RH Brake Assembly No. 120-9436 19
Hydraulic Manifold Block and Fitting Assembly 20
Hydraulic Block Assembly No. T0000-7792 21
Hydraulic Motor and Hose Assembly 22
Hydraulic Motor Assembly No. T0000-5303 23
Hydraulic Cylinder and Manifold Block Assembly 24
Block Guard and Hose Assembly 25
Brake Assembly 26
Wire Harness and Pocket Control Assembly 27
Wireless Remote Assembly 28
Attachments and Accessories 29

© 2015—The Toro® Company
8111 Lyndale Avenue South
Bloomington, MN 55420

Contact us at www.Toro.com.
Printed in the USA.
All Rights Reserved

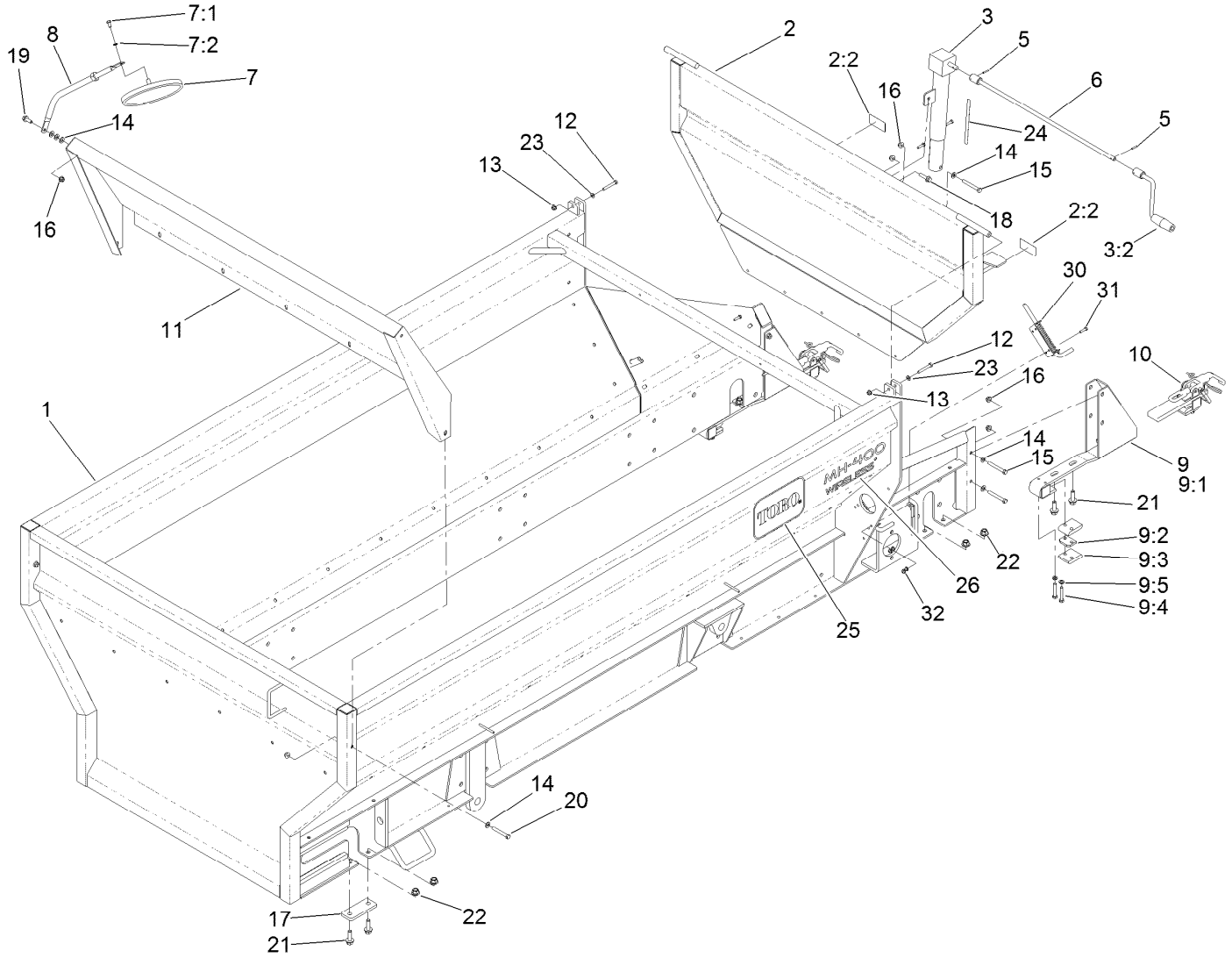

Box Frame Assembly

Ref.	Part Number	Qty.	Description
1	120-0890	1	Box Frame ASM
2	120-0891	1	Tailgate ASM
2:2	119-6838	2	Decal-Warning, Conveyor
3	T36031200	1	Jack-Tailgate
3:2	T36031210	1	Handle-Crank
5	32121-45	2	Pin-Spring
6	T36011220-01	1	Crank-Jack
7	92-2678	1	Mirror-Convex
7:1	322-2	1	Screw-HH
7:2	3253-4	1	Washer-Lock
8	125-0150	1	Mirror-Arm, Adjustable
9	T36015790	2	Attachment Bracket ASM
9:1	119-6872-01	1	Bracket-Attachment
9:2	T01-13489B	1	Tab-Spacer
9:3	T36015200	2	Bar-Bearing
9:4	323-10	2	Screw-HH
9:5	3253-21	2	Washer-Lock
10	T36015800	2	Attachment Clamp ASM
11	T36011550-01	1	Panel-Sloped

Ref.	Part Number	Qty.	Description
12	322-11	2	Screw-HH
13	104-8300	2	Nut-Flange, NI
14	3256-24	10	Washer-Flat
15	323-14	5	Screw-HH
16	104-8301	14	Nut-Flange, NI
17	T36011650	2	Bar-Bridge
18	114-4681	1	Screw-HHF
19	3234-42	6	Screw-HHF
20	323-13	2	Screw-HH
21	100-6116	8	Screw-HHF
22	99-5107	8	Nut-Lock
23	3256-23	2	Washer-Flat
24	119-6869	1	Decal-Tailgate Adjustment
25	66-6140	3	Decal
26	119-6803	3	Decal-Wireless
30	T62021030	2	Latch-Spring
31	321-6	8	Screw-HH
32	104-7201	8	Nut-Flange, NI

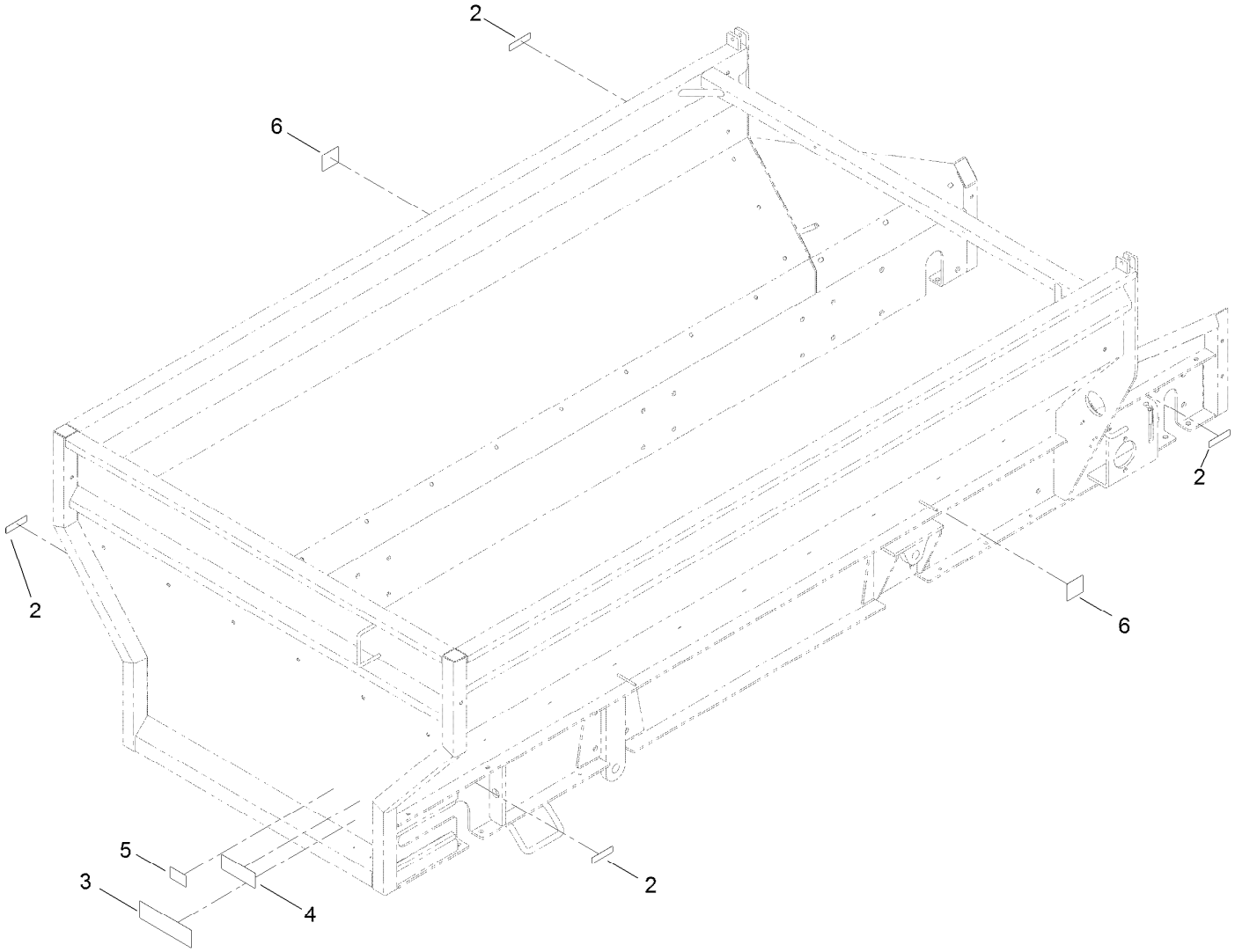

Box Frame Decal Assembly No. 120-0890

Ref.	*Part Number*	*Qty.*	*Description*
2	119-0217	4	Decal-Danger
3	119-6806	1	Decal-Danger
4	119-6812	1	Decal-Warning, Tipping Hazard
5	119-6833	1	Decal-Max Load
6	93-9899	2	Decal-Warning

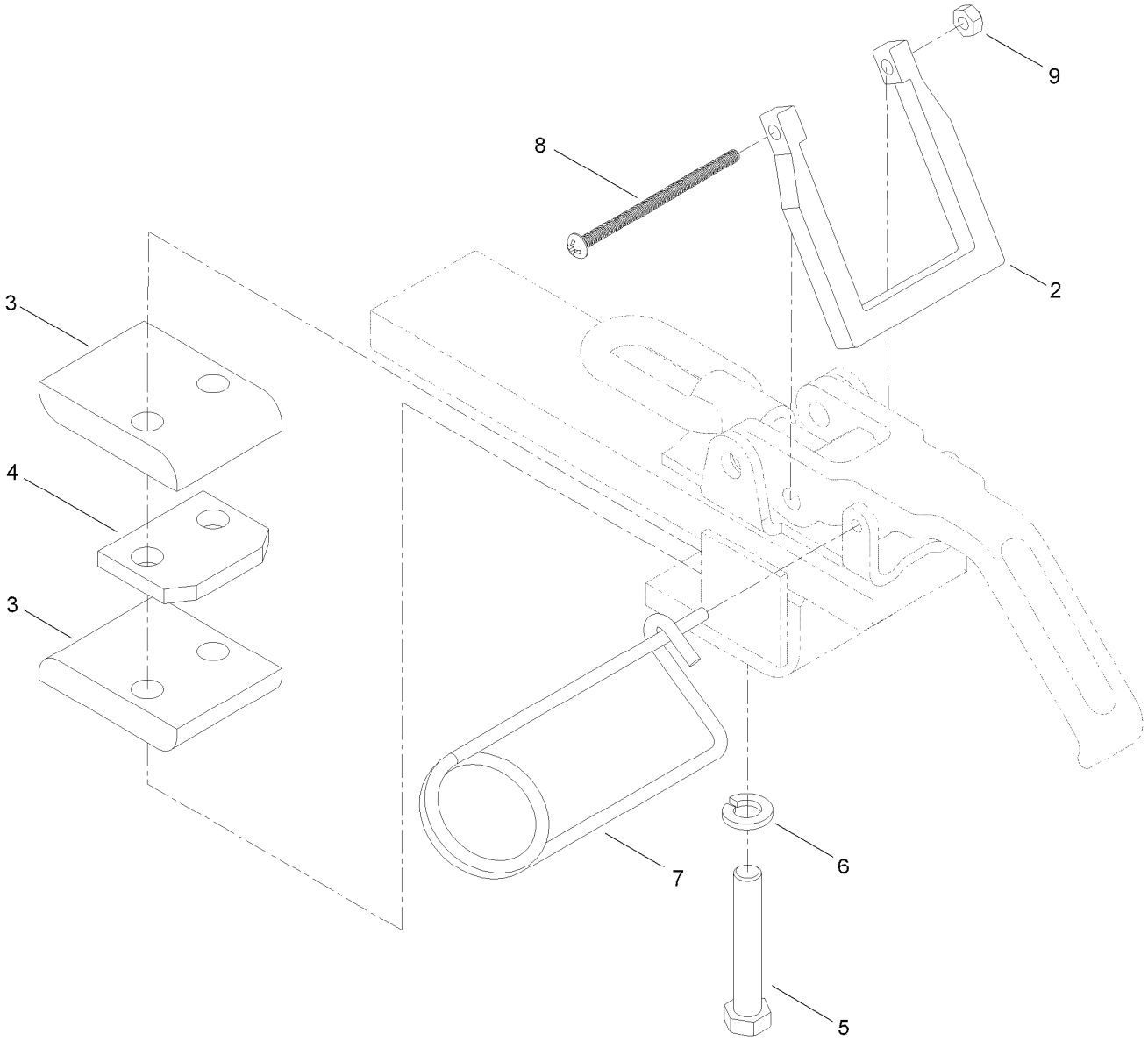

Attachment Clamp Assembly No. T36015800

Ref.	*Part Number*	*Qty.*	*Description*
2	T36015794	1	Lock-Attachment Clamp
3	T36015200	2	Bar-Bearing
4	T01-13489B	1	Tab-Spacer
5	323-11	2	Screw-HH
6	3253-21	2	Washer-Lock
7	T0000-3247	1	Pin-Lock
8	120-0884	1	Screw-PRH
9	3296-2	1	Nut-Lock, NI

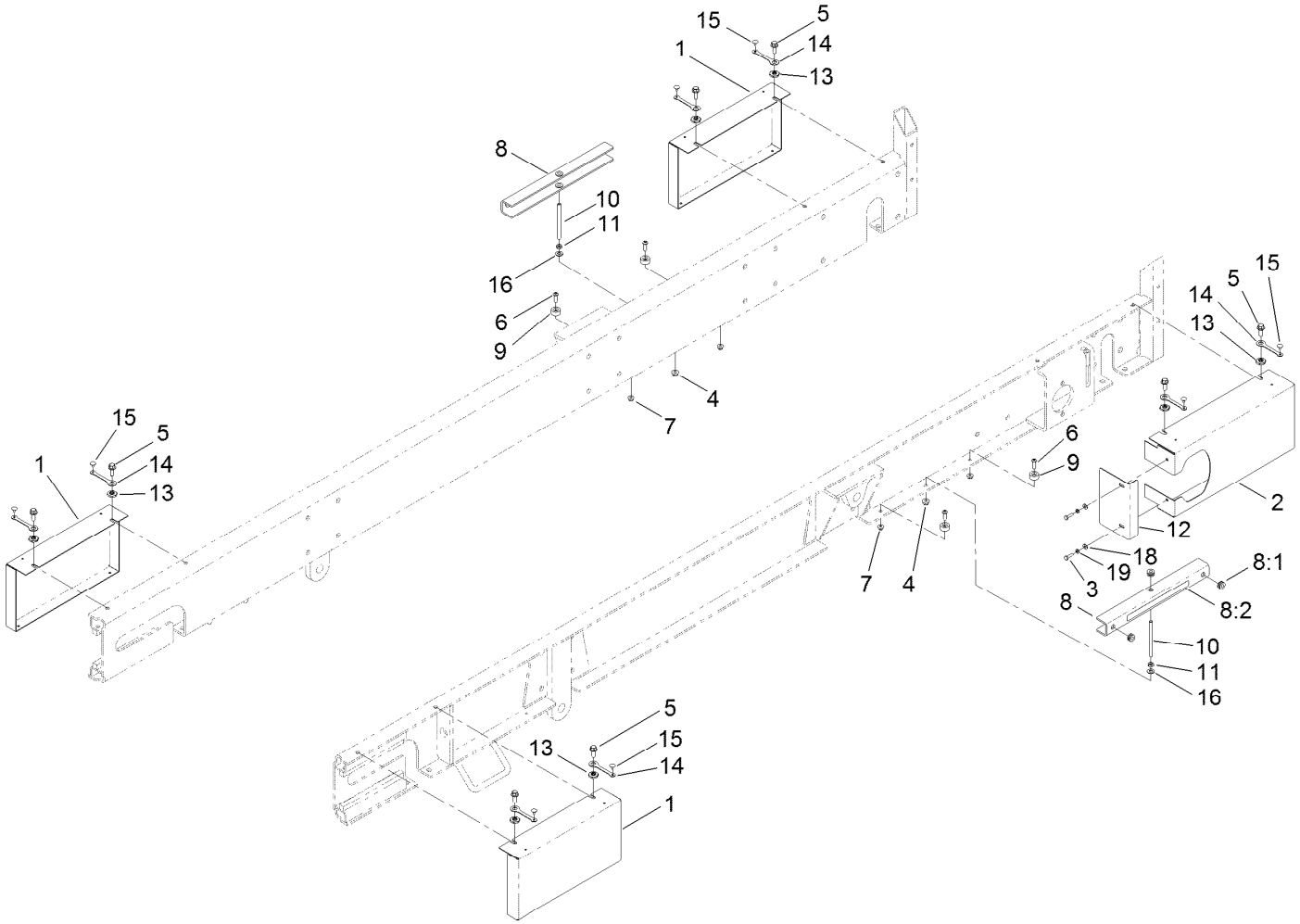

Guard Assembly

Ref.	Part Number	Qty.	Description
1	T36011630-03	3	Guard-Idler
2	T36011640-03	1	Guard-Drive
3	321-5	2	Screw-HH
4	104-8301	2	Nut-Flange, NI
5	3234-42	8	Screw-HHF
6	3274-104	4	Screw-HSBH
7	104-8300	4	Nut-Flange, NI
8	T36011580	2	Lift Cylinder Stop ASM
8:1	92-5972	4	Grommet-Rubber
8:2	93-9852	1	Decal-Warning

Ref.	Part Number	Qty.	Description
9	T0001-3570	4	Spacer-Stop, Lift Cylinder
10	T36011590	2	Pin-Lift Cylinder Stop
11	3218-3	2	Nut-Jam
12	T0000-5529-03	1	Guard-Motor, Drive
13	117-8347	8	Nut-Shoulder
14	117-8339	8	Lanyard-3 Inch
15	146489	8	Rivet
16	3256-24	2	Washer-Flat
18	3256-22	2	Washer-Flat
19	3253-3	2	Washer-Lock

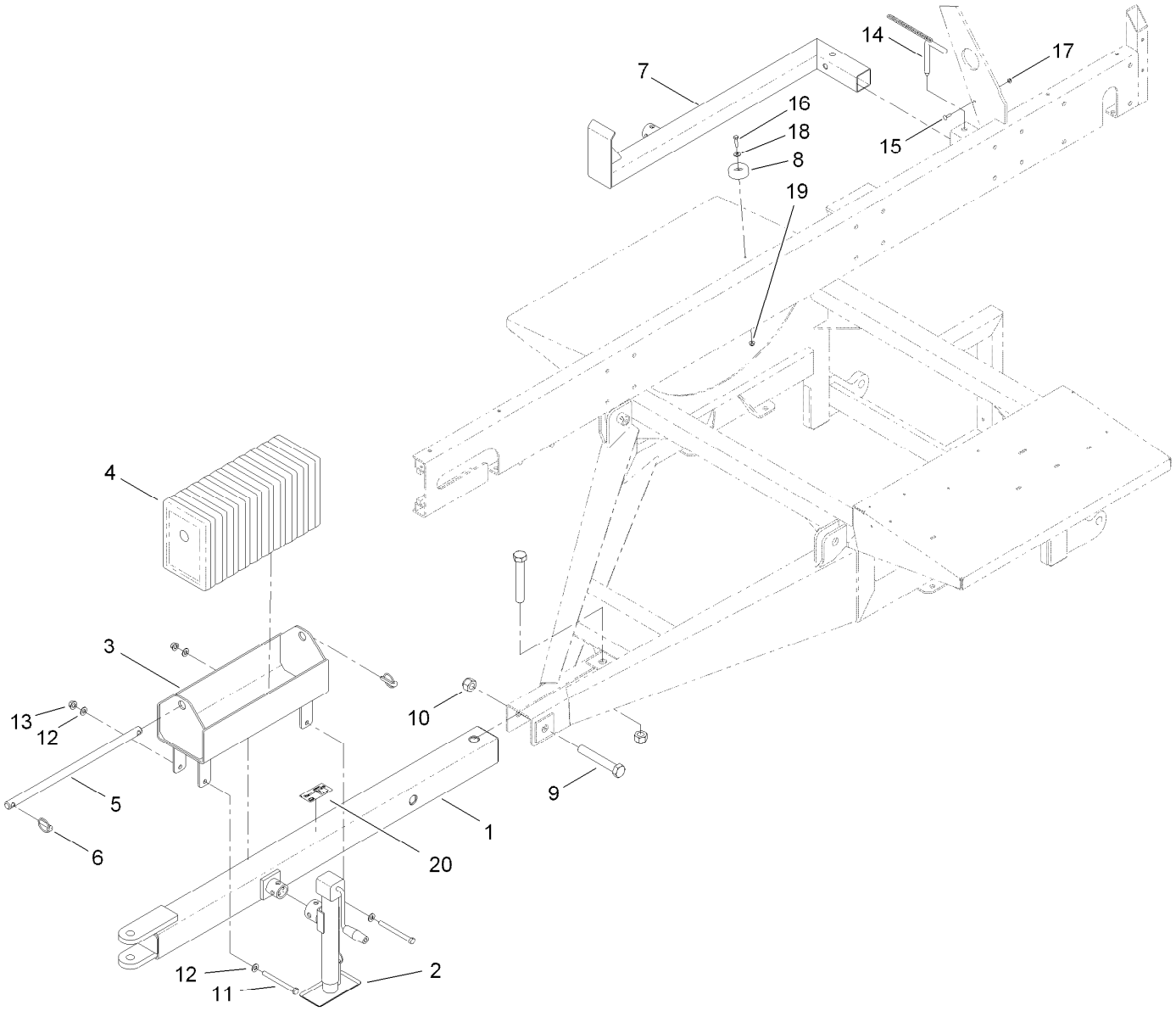

Hitch Assembly

Ref.	Part Number	Qty.	Description
1	T36012112-01	1	Tube-Hitch
2	T0000-3423	1	Jack-Sidewind
3	T36028000-01	1	Box-Weight
4	119-6860-01	10	Casting-Counterweight
5	T36028010-01	1	Shaft-Weight Box
6	283-71	2	Pin-Lynch
7	T36011190-01	1	Leg-Jack
8	108-1605	1	Bumper-Recess
9	120-0887	2	Screw-HH
10	120-0888	2	Nut-HH

Ref.	Part Number	Qty.	Description
11	325-22	2	Screw-HH
12	3256-26	4	Washer-Flat
13	99-5107	2	Nut-Lock
14	T36011195	1	Pin
15	3229-2	1	Screw-CARR
16	322-6	1	Screw-HH
17	104-7201	1	Nut-Flange, NI
18	3256-3	1	Washer-Flat
19	104-8300	1	Nut-Flange, NI
20	119-6836	1	Decal-Weight Case

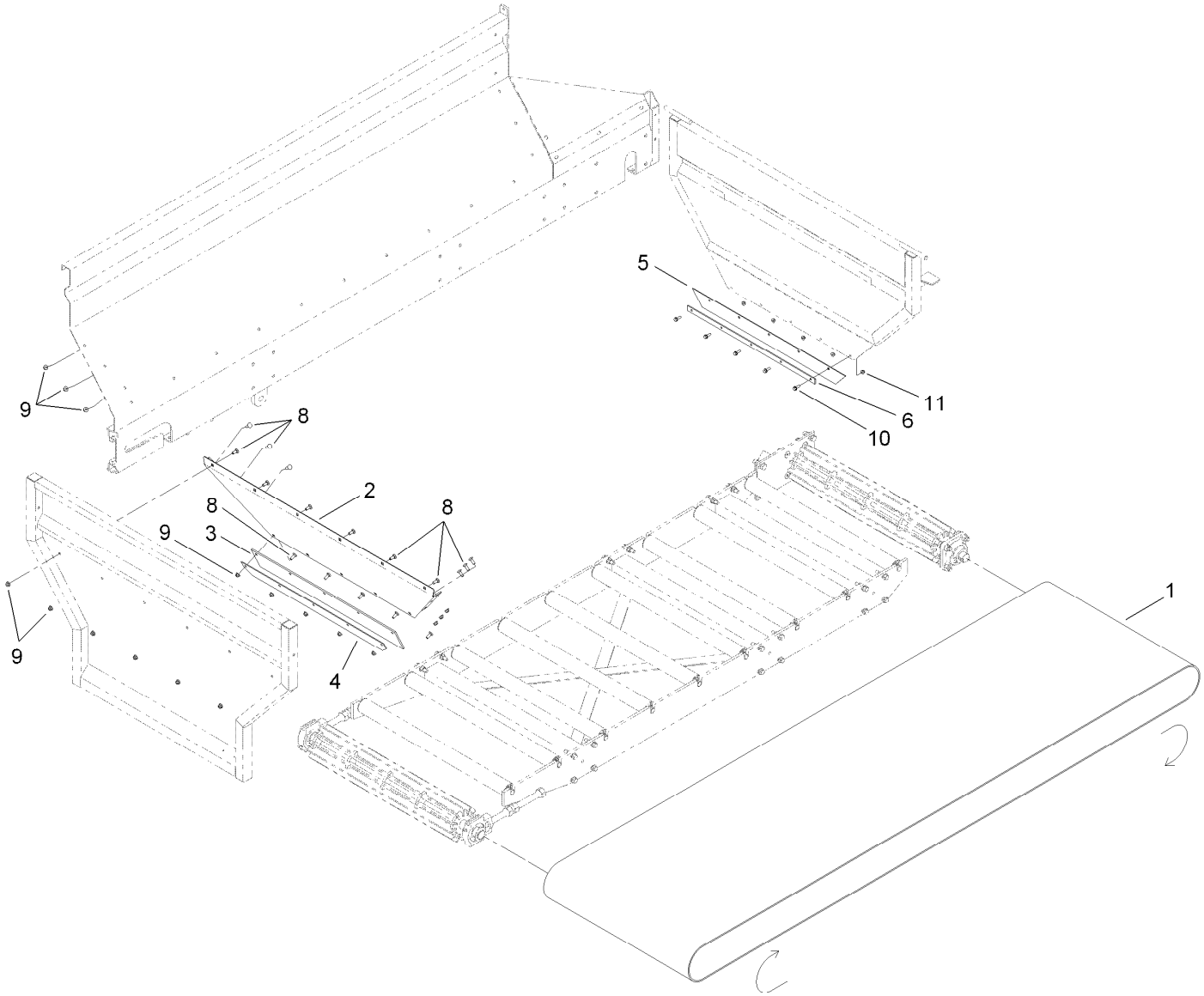

Belt and Skirting Assembly

Ref.	*Part Number*	*Qty.*	*Description*
1	T60191215	1	Belt-Endless
2	T36011525-01	1	Panel-Sloped
3	T01-22002B	1	Skirt-Front Seal, Rubber
4	T36011535-01	1	Bar-Front Seal
5	T36013010	1	Seal-Belt
6	T36011230-01	1	Retainer-Belt Seal
8	3231-22	17	Screw-CARR
9	104-8301	17	Nut-Flange, NI
10	3234-29	5	Screw-HHF
11	104-8300	5	Nut-Flange, NI

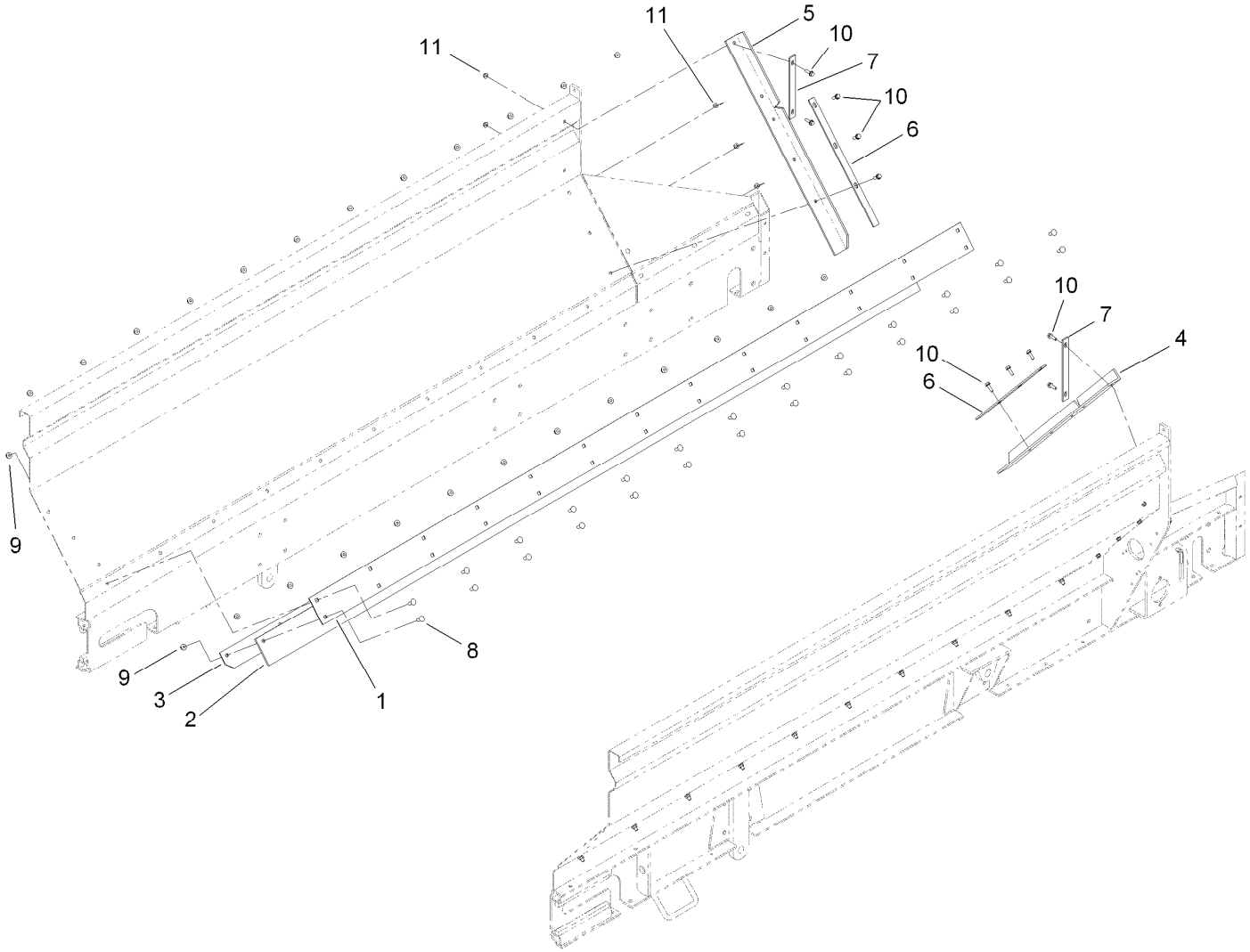

Skirting Assembly

Ref.	Part Number	Qty.	Description
1	T36011520-01	2	Panel-Side Seal
2	T01-22000B	2	Seal-Rubber, Side
3	T36011530-01	2	Bar-Side Seal
4	T36011260	1	Seal-Tailgate, LH
5	T36011270	1	Seal-Tailgate, RH
6	T36011280-01	2	Bar-Seal, Lower
7	T36011290-01	2	Bar-Seal, Upper
8	3231-22	52	Screw-CARR
9	104-8301	52	Nut-Flange, NI
10	3234-29	10	Screw-HHF
11	104-8300	10	Nut-Flange, NI

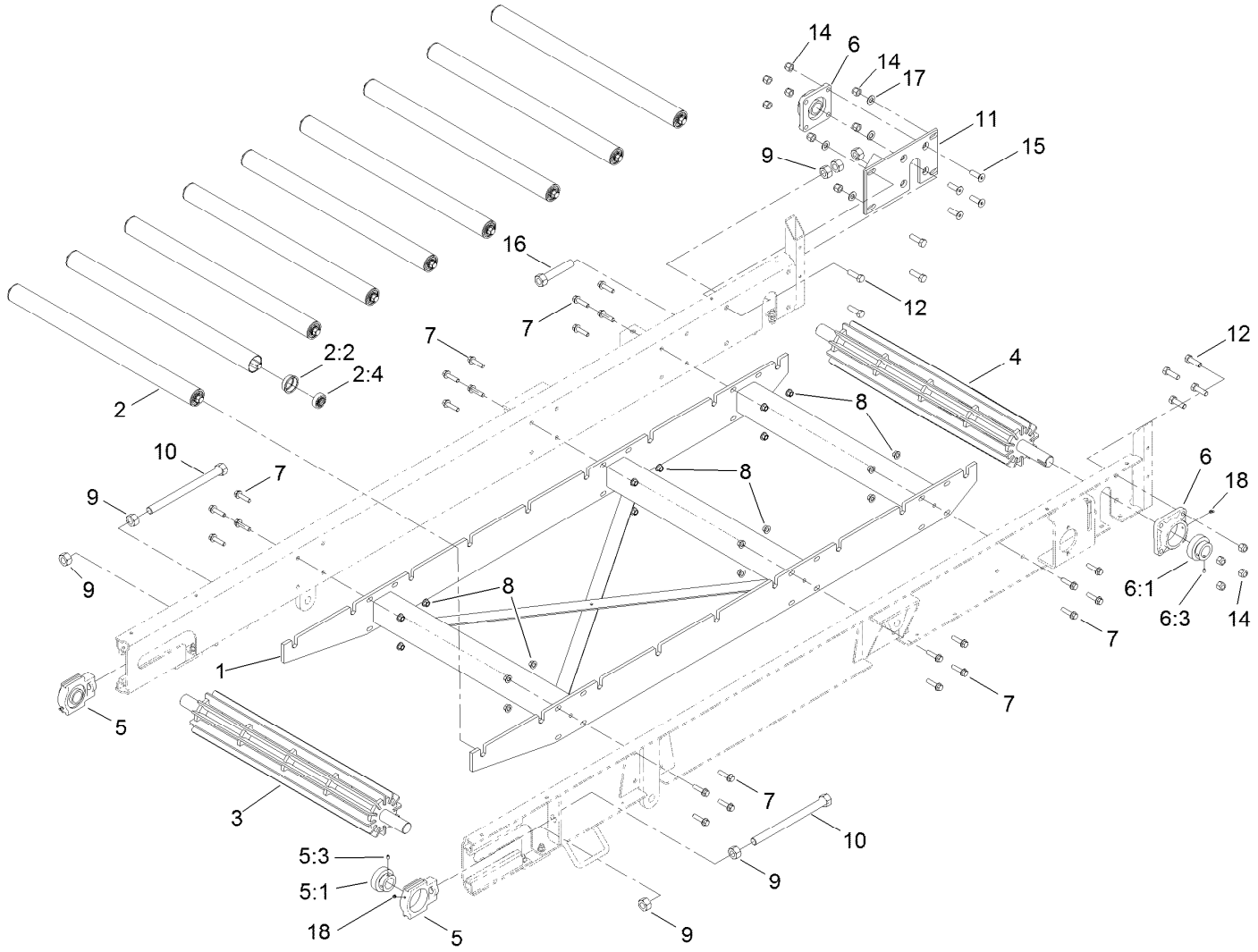

Conveyor Assembly

Ref.	Part Number	Qty.	Description
1	T36011600-01	1	Frame-Roller
2	T36011680	9	Belt Roller ASM
2:2	T36011685	2	Insert-Roller
2:4	T60111000	2	Bearing-Ball
3	T36011620-03	1	Idler Roller ASM
4	119-6892-03	1	Roller-Drive
5	T60114305	2	Take-Up Bearing ASM
5:1	120-0817	1	Bearing-Collar, Lock
5:3	3246-17	1	Setscrew-HSH
6	T60116355	2	4-Bolt Bearing ASM
6:1	120-0817	1	Bearing-Collar, Lock
6:3	3246-17	1	Setscrew-HSH

Ref.	Part Number	Qty.	Description
7	3234-27	24	Screw-HHF
8	99-5107	24	Nut-Lock
9	SG330081	7	Nut-Hex
10	T36011670	2	Rod-Tensioner
11	T36011690-01	1	Plate-Mounting
12	327-6	8	Screw-HH
14	3296-53	12	Nut-Lock, NI
15	120-0904	4	Screw-HSH
16	T36011675	1	Rod-Lock
17	3256-27	4	Washer-Flat
18	302-61	4	Fitting-Grease

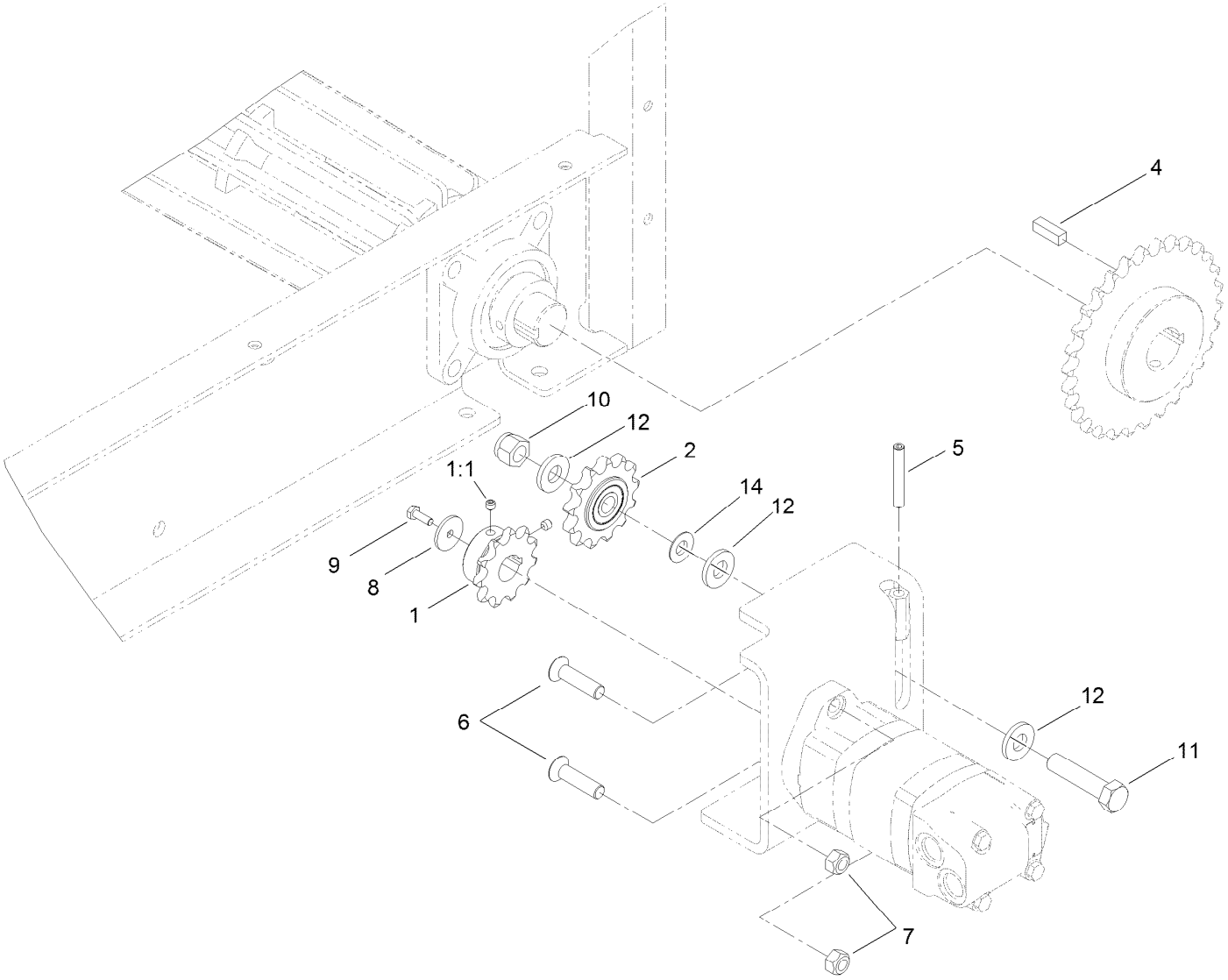

Chain Drive Assembly

Ref.	*Part Number*	*Qty.*	*Description*
1	T60135010	1	Sprocket
1:1	3246-2	2	Screw-Set, HSH
2	T60134090	1	Sprocket
4	T36011810	1	Key
5	120-0909	1	Screw-HSH
6	120-0898	2	Screw-Fhhs
7	97-1206	2	Locknut
8	103995	1	Washer
9	321-4	1	Screw-HH
10	3296-53	1	Nut-Lock, NI
11	327-8	1	Screw-HH
12	99-7667	3	Washer-Flat
14	3256-27	1	Washer-Flat

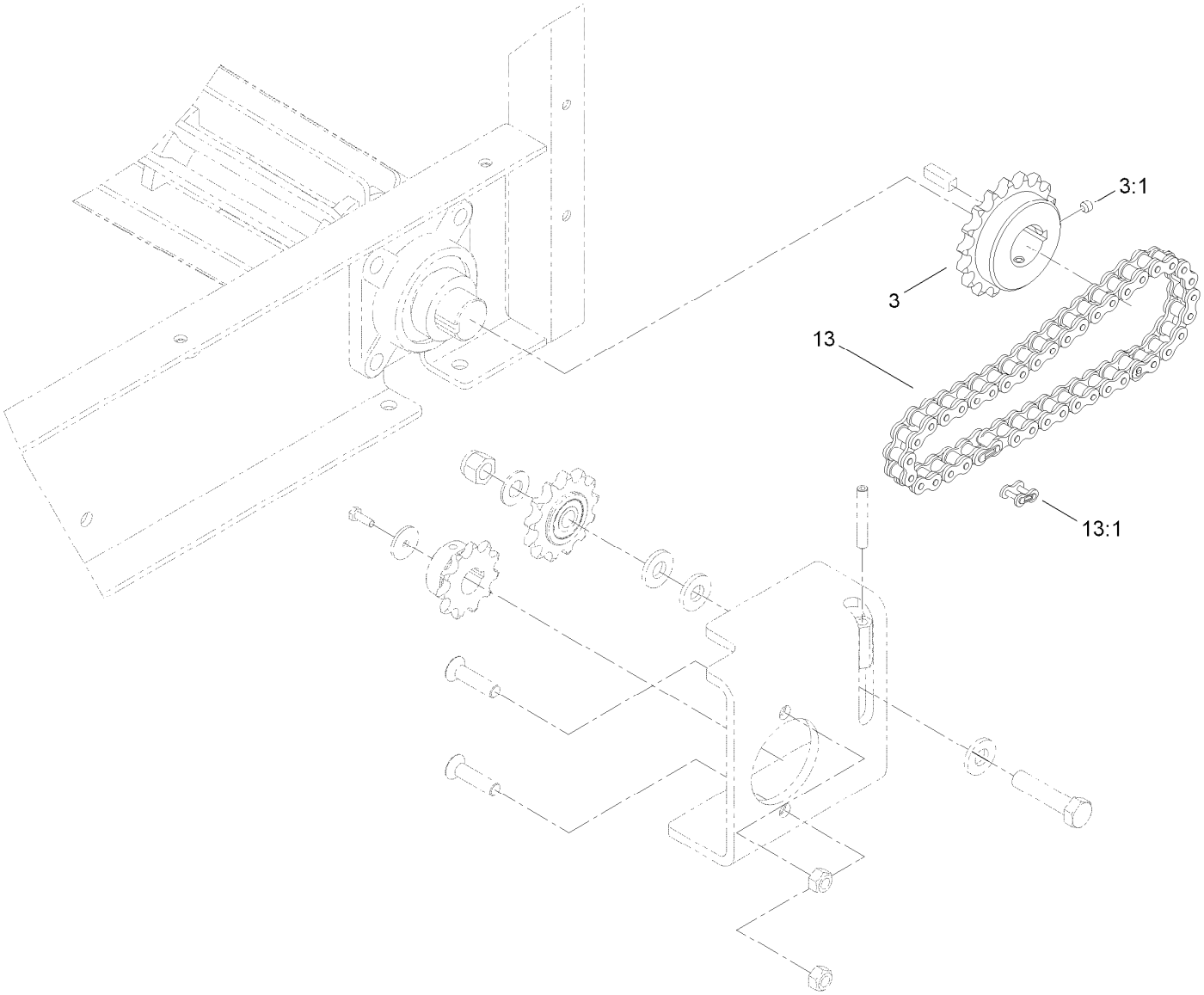

Chain and Sprocket Assembly

Ref.	*Part Number*	*Qty.*	*Description*
3	T0000-8137	1	Sprocket
3:1	3247-2	2	Screw-Set, HSH
13	T36011805	1	Chain-Drive, 33 Inch
13:1	T60151016	1	Link-Connecting, #60

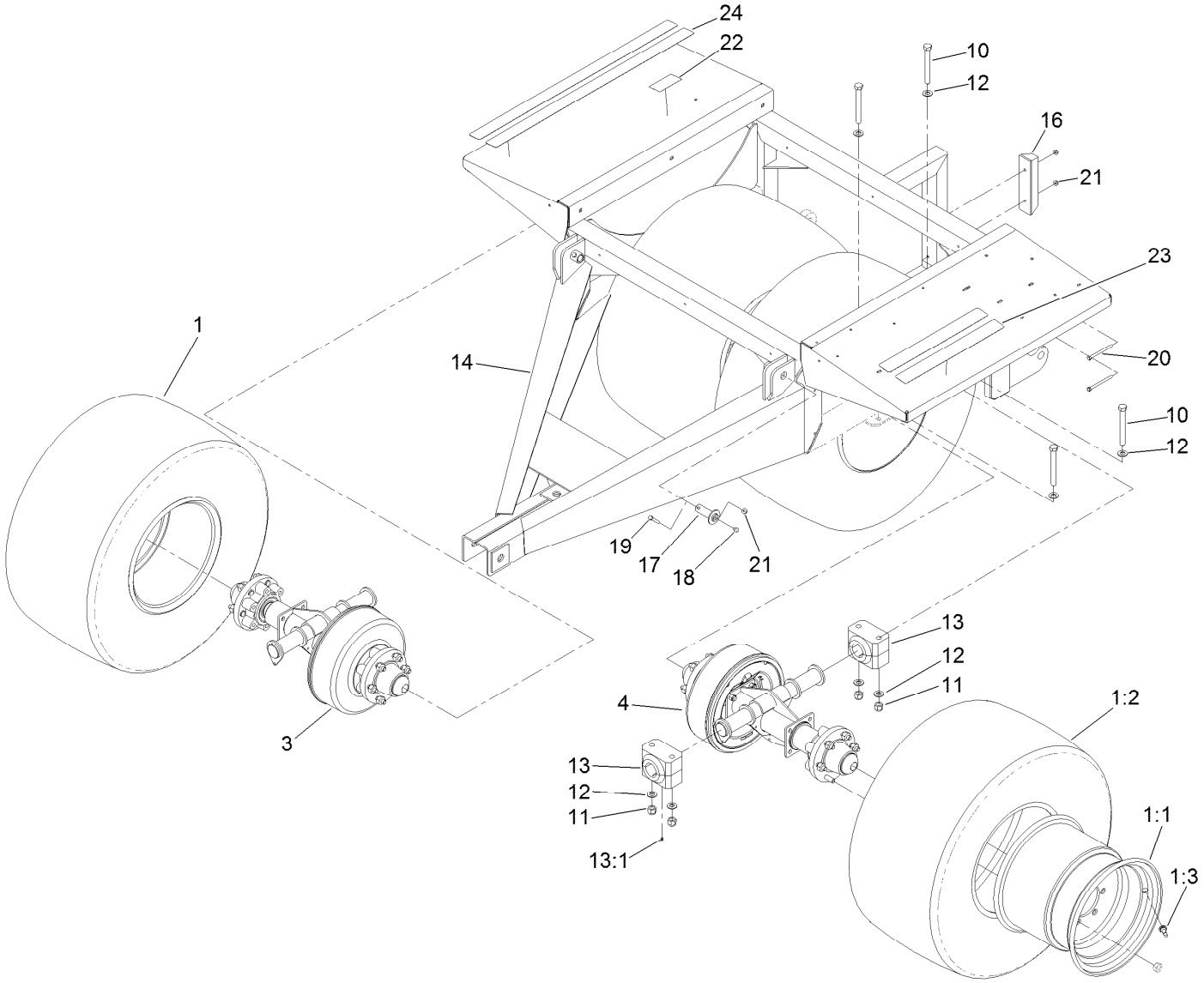

Wheel and Frame Assembly

Ref.	Part Number	Qty.	Description
1	120-9410	4	Wheel And Tire ASM
1:1	120-9411	1	Wheel-Turf
1:2	120-9412	1	Tire-Turf
1:3	232-24	1	Stem-Valve
3	120-9401	1	RH Shaft ASM
4	120-9402	1	LH Shaft ASM
10	120-0923	8	Screw-HH
11	120-0924	8	Nut-Lock, NI
12	119-1868	16	Washer
13	T60111196	4	Bearing-Polyurethane
13:1	302-19	1	Fitting-Grease

Ref.	Part Number	Qty.	Description
14	125-0166-01	1	Frame
16	T62011021	1	Bumper-Rubber
17	T36012070-01	2	Pin-Hinge
18	302-2	2	Fitting-Grease
19	322-10	2	Screw-HH
20	322-19	2	Screw-HH
21	104-8300	4	Nut-Flange, NI
22	119-6835	1	Decal-Jack
23	T36013050	2	Thread-Walk, Safety
24	T36013052	2	Thread-Walk, Safety

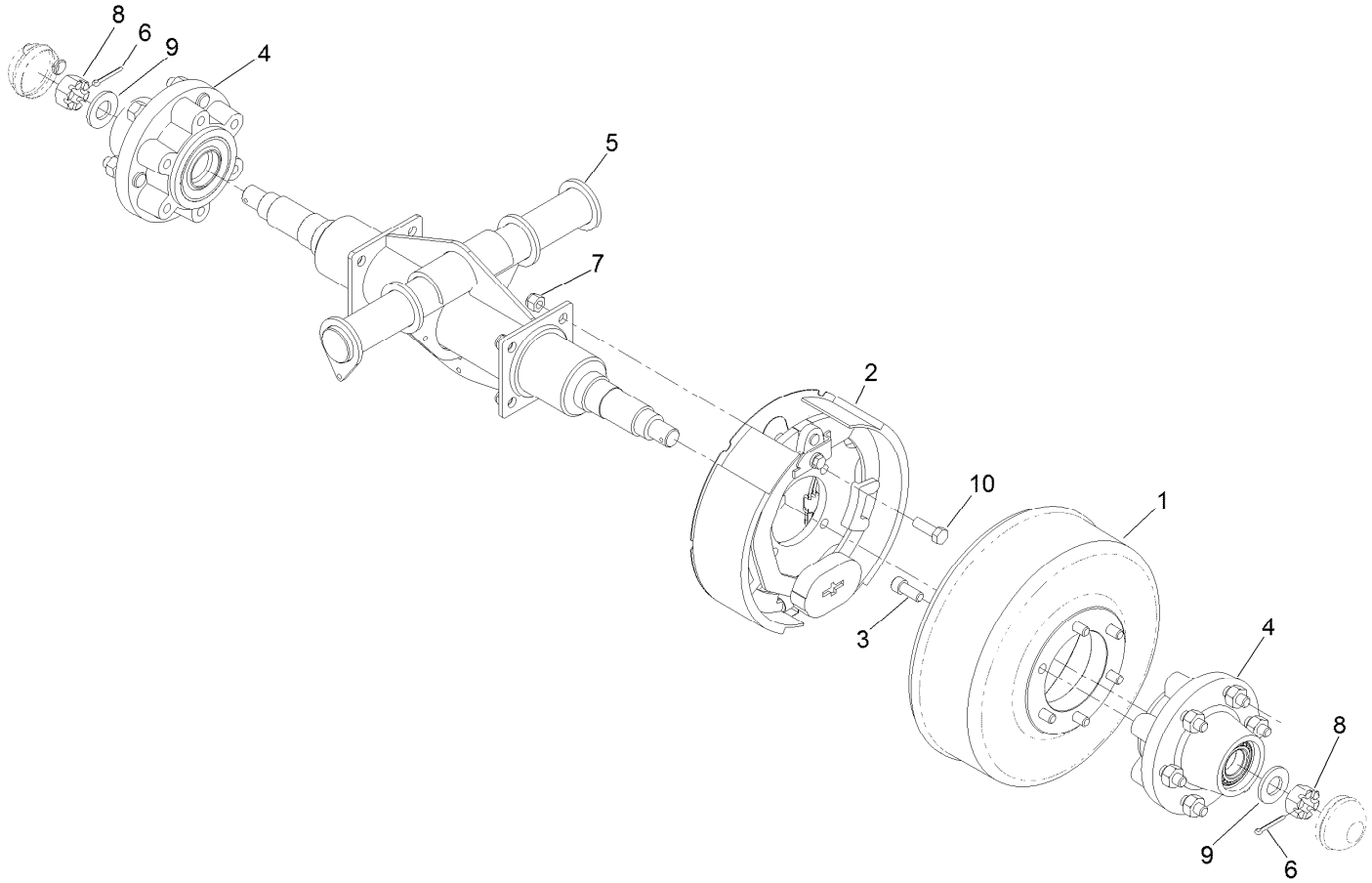

RH Shaft Assembly No. 120-9401

Ref.	*Part Number*	*Qty.*	*Description*
1	119-6871	1	Drum-Brake
2	120-9437	1	LH Brake ASM
3	120-0940	6	Screw-HSH
4	120-9404	2	Hub ASM
5	120-9405-03	1	Beam-Walking
6	3272-23	2	Pin-Cotter
7	3296-19	4	Nut-Hex
8	32136-11	2	Nut-Hex, Slot
9	T54051068	2	Washer-Spindle
10	325-6	4	Screw-HH

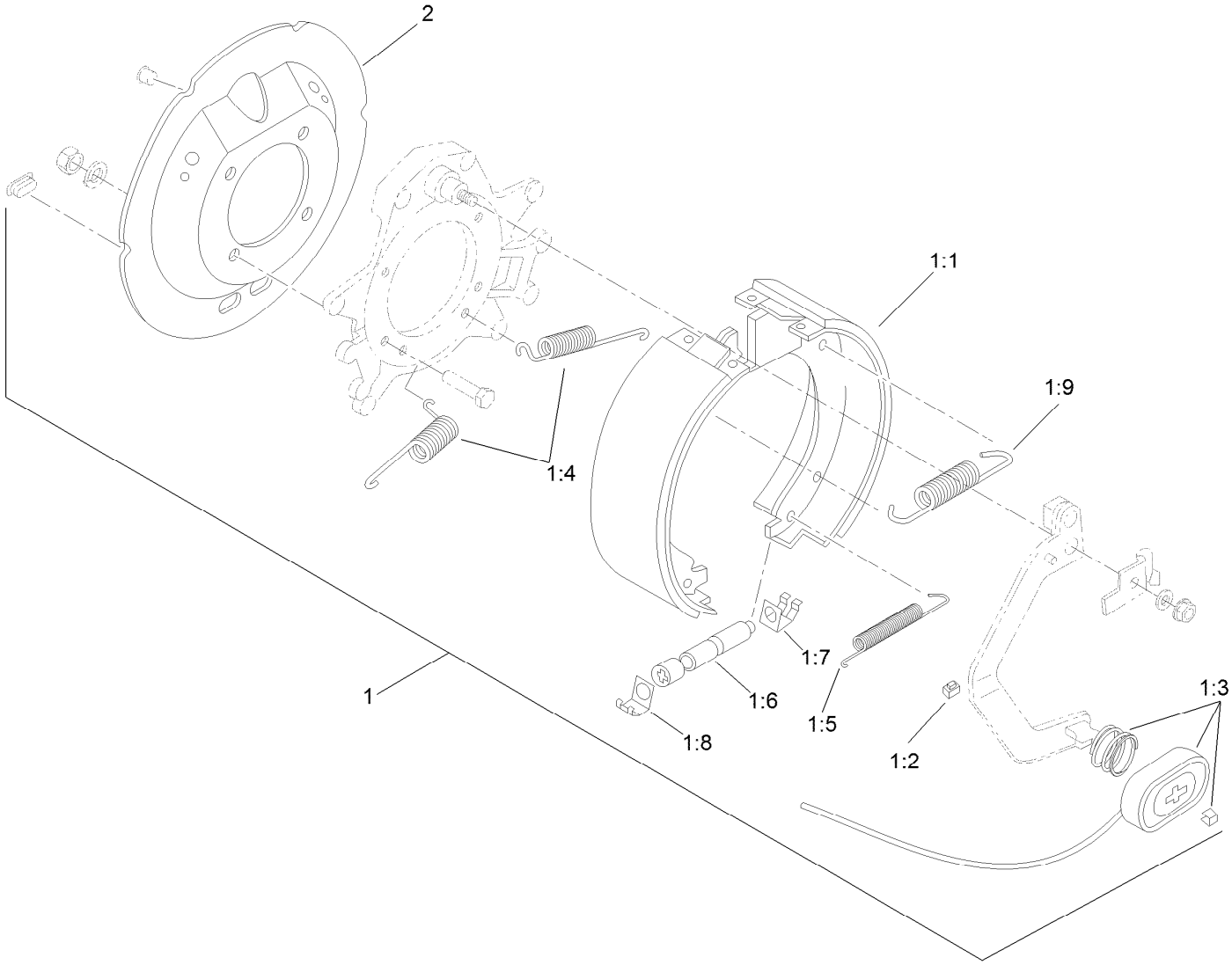

LH Brake Assembly No. 120-9437

Ref.	*Part Number*	*Qty.*	*Description*
1		1	Brake-LH ●
1:1	120-9441	1	LH Shoe And Lining Kit
1:2	120-9443	1	Clip-Wire
1:3	120-9444	1	Magnet Kit
1:4	120-9445	2	Spring-Centering
1:5	120-9446	1	Spring-Adjuster
1:6	120-9447	1	Adjuster Assembly
1:7	120-9448	1	Clip-Adjuster
1:8	120-9449	1	Clip-Adjuster
1:9	120-9396	1	Spring-Return
2	120-9433	1	Cover-Dust, Brake

● Not serviced separately

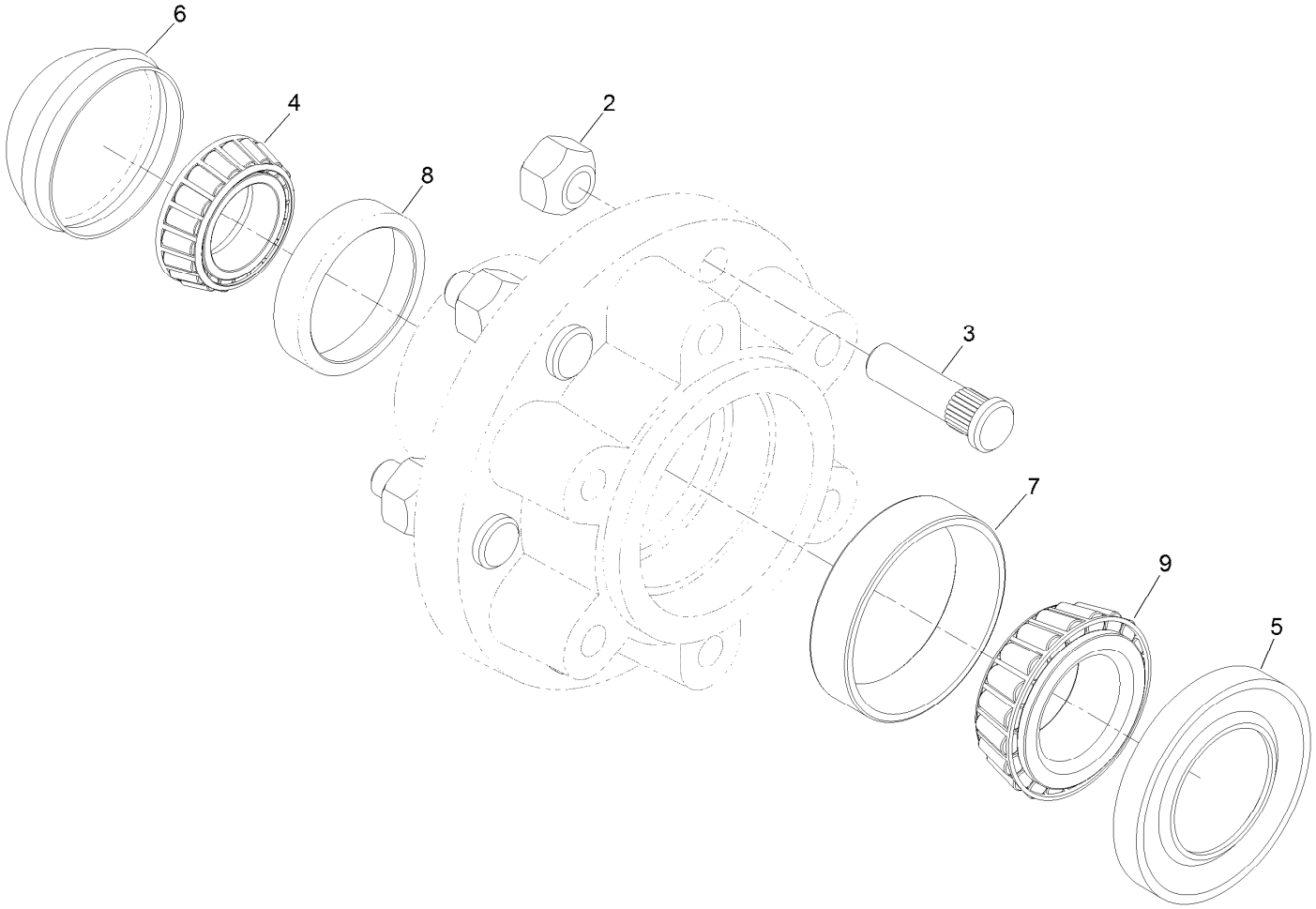

Hub Assembly No. 120-9404

Ref.	*Part Number*	*Qty.*	*Description*
2	T54031040	6	Nut-Wheel
3	T54031042	6	Stud-Wheel
4	T54051010	1	Bearing-Hub, Outer
5	T54051019	1	Seal-Bearing
6	T54051026	1	Cap-Hub (5000/6000 Lb.)
7	T54051037	1	Race-Bearing, Inner
8	T54051042	1	Races-Bearing, Outer
9	T54051100	1	Bearing-Hub, Inner

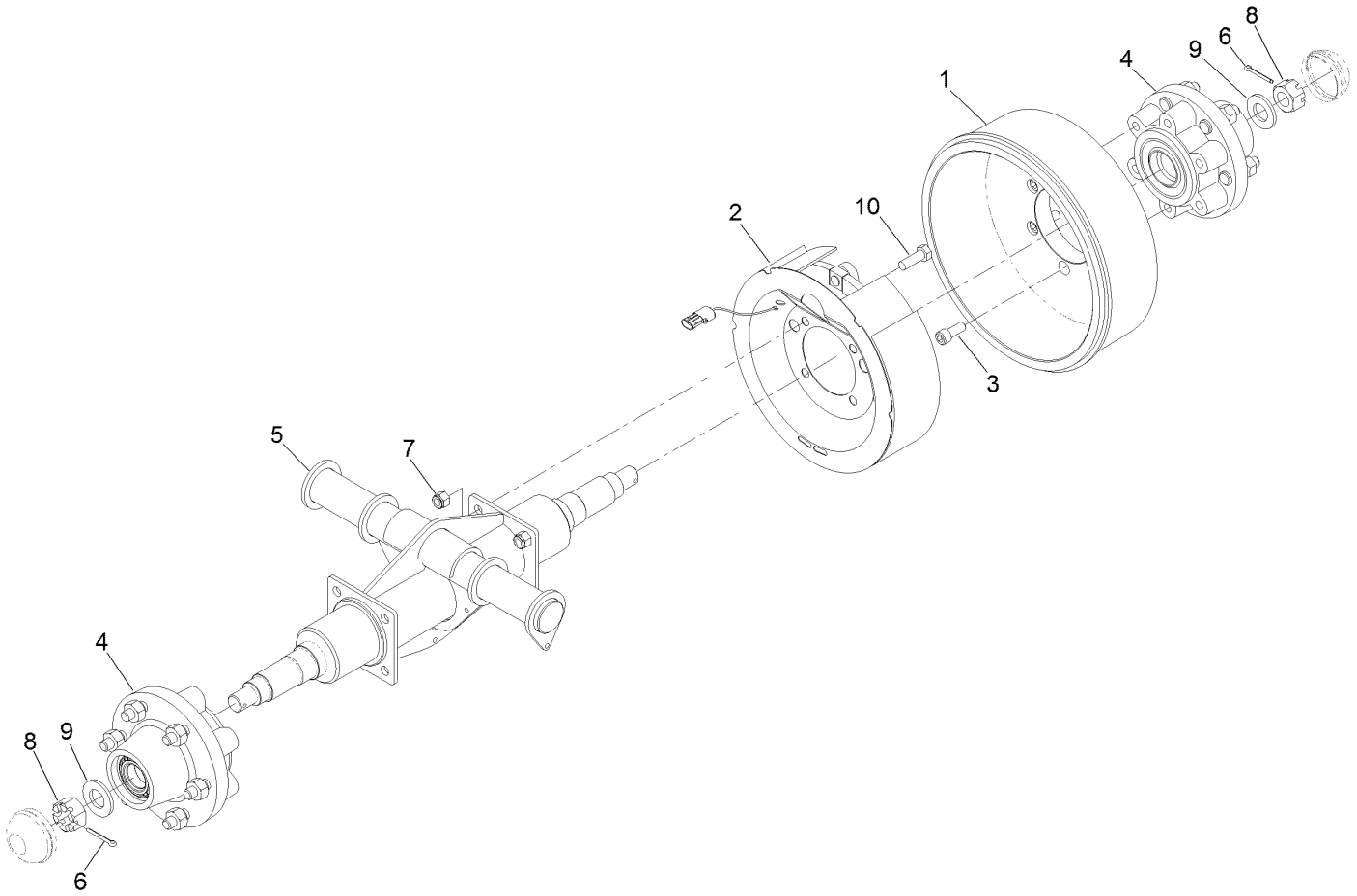

LH Shaft Assembly No. 120-9402

Ref.	*Part Number*	*Qty.*	*Description*
1	119-6871	1	Drum-Brake
2	120-9436	1	RH Brake ASM
3	120-0940	6	Screw-HSH
4	120-9404	2	Hub ASM
5	120-9405-03	1	Beam-Walking
6	3272-23	2	Pin-Cotter
7	3296-19	4	Nut-Hex
8	32136-11	2	Nut-Hex, Slot
9	T54051068	2	Washer-Spindle
10	325-6	4	Screw-HH

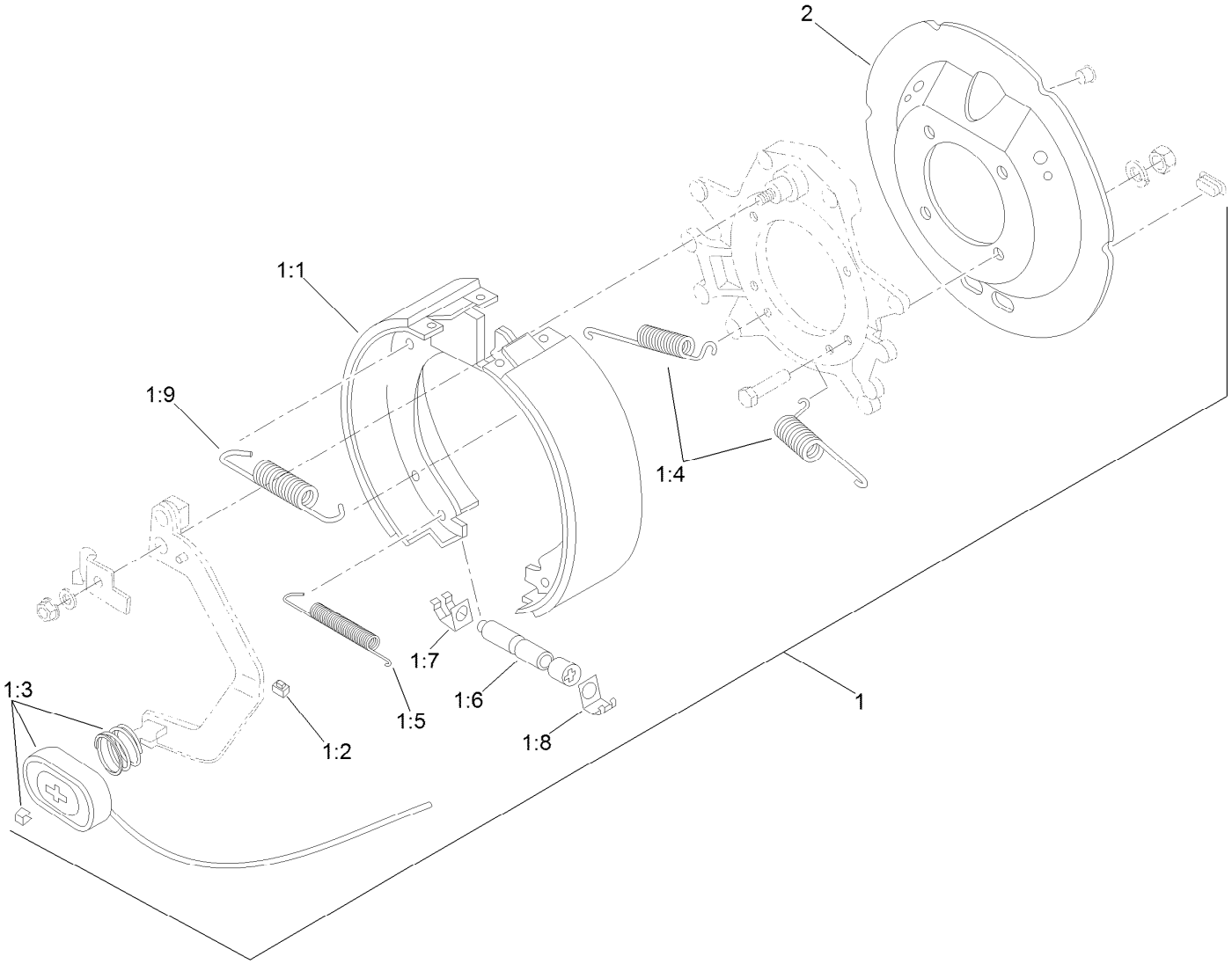

RH Brake Assembly No. 120-9436

Ref.	*Part Number*	*Qty.*	*Description*
1		1	Brake-RH ●
1:1	120-9442	1	RH Shoe And Lining Kit
1:2	120-9443	1	Clip-Wire
1:3	120-9444	1	Magnet Kit
1:4	120-9445	2	Spring-Centering
1:5	120-9446	1	Spring-Adjuster
1:6	120-9447	1	Adjuster Assembly
1:7	120-9448	1	Clip-Adjuster
1:8	120-9449	1	Clip-Adjuster
1:9	120-9396	1	Spring-Return
2	120-9433	1	Cover-Dust, Brake

● Not serviced separately

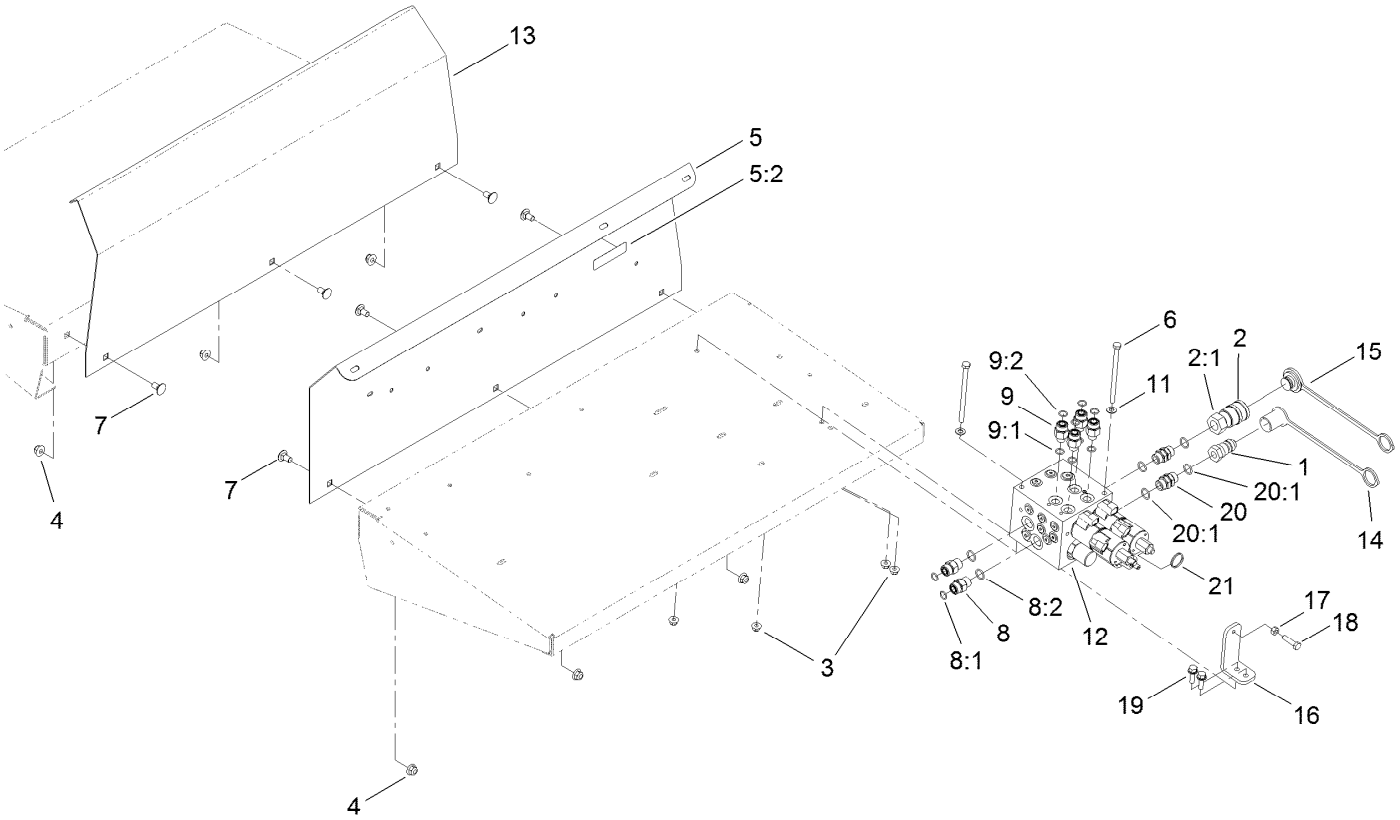

Hydraulic Manifold Block and Fitting Assembly

Ref.	Part Number	Qty.	Description
1	98-4698	1	Male-Disconnect, Quick
2	98-4699	1	Female-Disconnect, Quick
2:1	100-4165	1	Seal Kit
3	104-8300	4	Nut-Flange, NI
4	104-8301	6	Nut-Flange, NI
5	120-0921	1	LH Fender Guard Service ASM
5:2	119-0217	1	Decal-Danger
6	322-49	2	Bolt-HH
7	3231-1	6	Screw-CARR
8	340-4	2	Fitting-HYD, Straight
8:1	237-30	1	O-Ring
8:2	237-79	1	O-Ring
9	340-5	4	Fitting-Straight

Ref.	Part Number	Qty.	Description
9:1	237-42	1	O-Ring
9:2	237-30	1	O-Ring
11	3256-23	2	Washer-Flat
12	T0000-7792	1	HYD Block ASM
13	T36011720-01	1	Guard-Fender, RH
14	T56152152	1	Cap-Quick Connect
15	T56152150	1	Plug-Quick Connect
16	T0002-4579-01	1	Bracket-Override Manual
17	3217-6	1	Nut-Hex
18	322-6	1	Screw-HH
19	3234-29	2	Screw-HHF
20	95-3209	2	Fitting-Thread, Straight
20:1	237-79	2	O-Ring
21	106-1392	1	Ring-Retaining, Spiral (EXT)

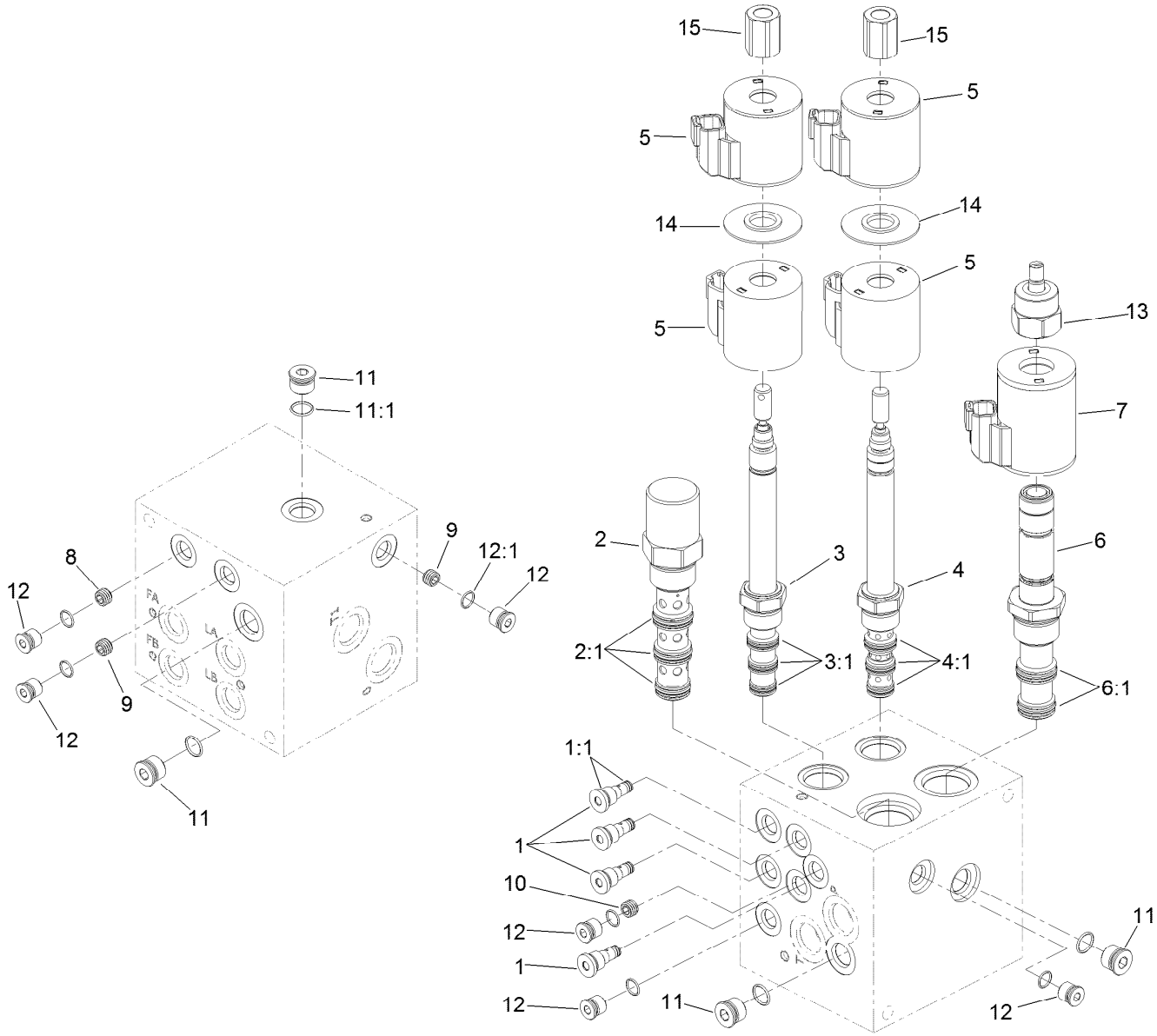

Hydraulic Block Assembly No. T0000-7792

Ref.	Part Number	Qty.	Description
1	120-9415	4	Valve-Check
1:1	125-0100	1	Seal Kit
2	120-9416	1	Valve-Pressure Compensator
2:1	110-6111	1	Seal Kit
3	120-9417	1	Valve-Solenoid
3:1	110-8908	1	Spool Valve Seal Kit
4	120-9418	1	Valve-Solenoid
4:1	110-8908	1	Spool Valve Seal Kit
5	119-4619	4	Coil-Solenoid
6	120-9420	1	Valve-Proportional Flow
6:1	114-5515	1	Seal Kit

Ref.	Part Number	Qty.	Description
7	120-0920	1	Coil-Valve
8	110-8883	1	Plug-Orifice (0.040)
9	110-8889	2	Plug-Orifice (0.020)
10	120-9422	1	Plug-Orifice (0.068)
11	353-508	4	Plug-HH
11:1	237-42	1	O-Ring
12	353-990	6	Plug ASM
12:1	237-78	1	O-Ring
13	125-0101	1	Nut-Coil
14	117-8316	2	Spacer-E Coil
15	125-0102	2	Nut-Coil

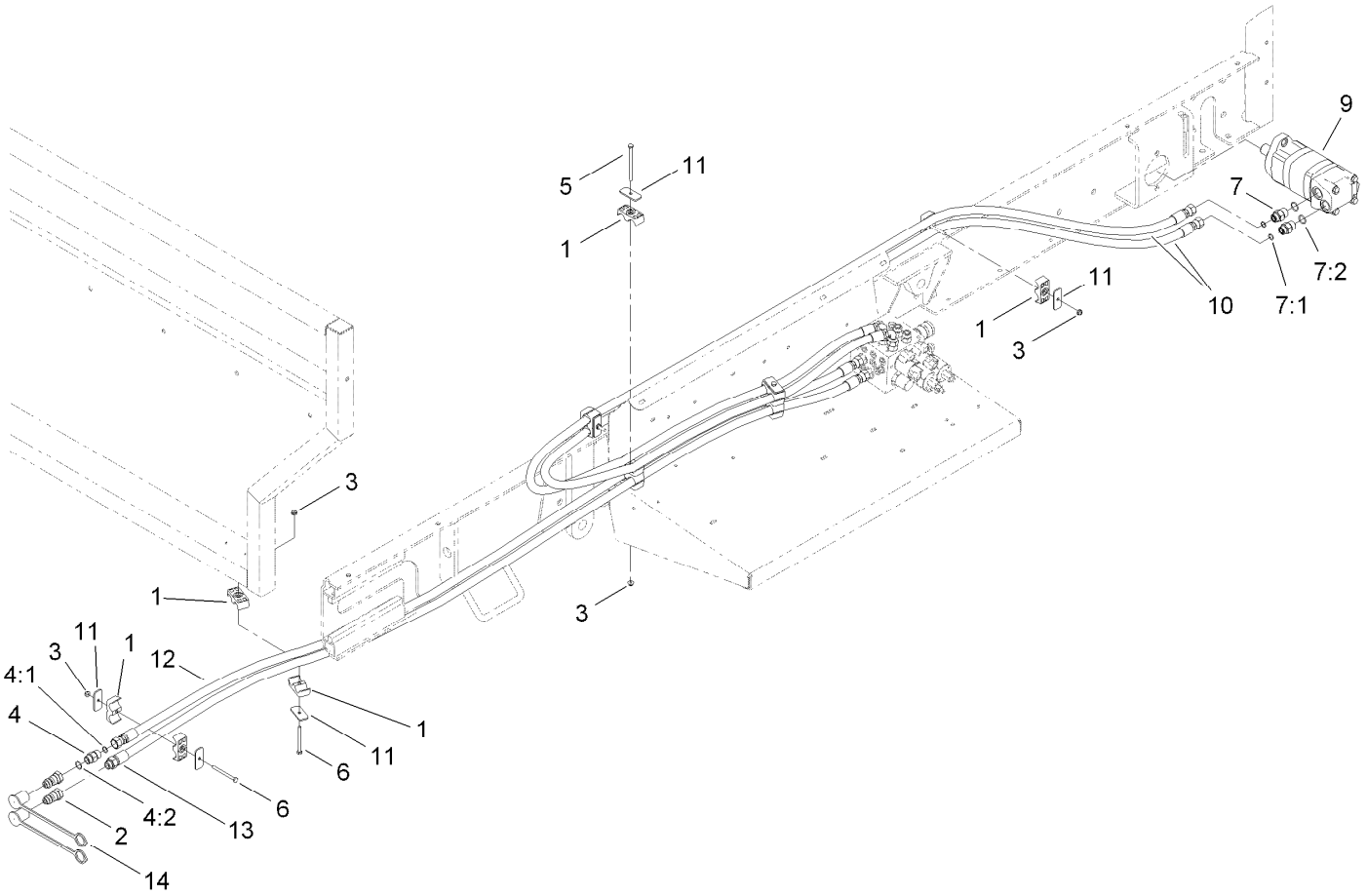

Hydraulic Motor and Hose Assembly

Ref.	Part Number	Qty.	Description
1	56-7974	16	Clamp-Tube
2	98-4698	2	Male-Disconnect, Quick
3	104-7201	6	Nut-Flange, NI
4	119-6898	1	Valve-Check, HYD
4:1	237-30	1	O-Ring
4:2	237-79	1	O-Ring
5	321-19	2	Screw-HH
6	321-18	2	Screw-HH
7	340-6	2	Fitting-HYD, Straight

Ref.	Part Number	Qty.	Description
7:1	237-30	1	O-Ring
7:2	237-80	1	O-Ring
9	T0000-5303	1	HYD Motor ASM
10	120-0865	2	Hose-HYD
11	T36033040	7	Plate-Clamp
12	120-0866	1	Hose-HYD
13	120-0867	1	Hose-HYD
14	T56152152	2	Cap-Quick Connect

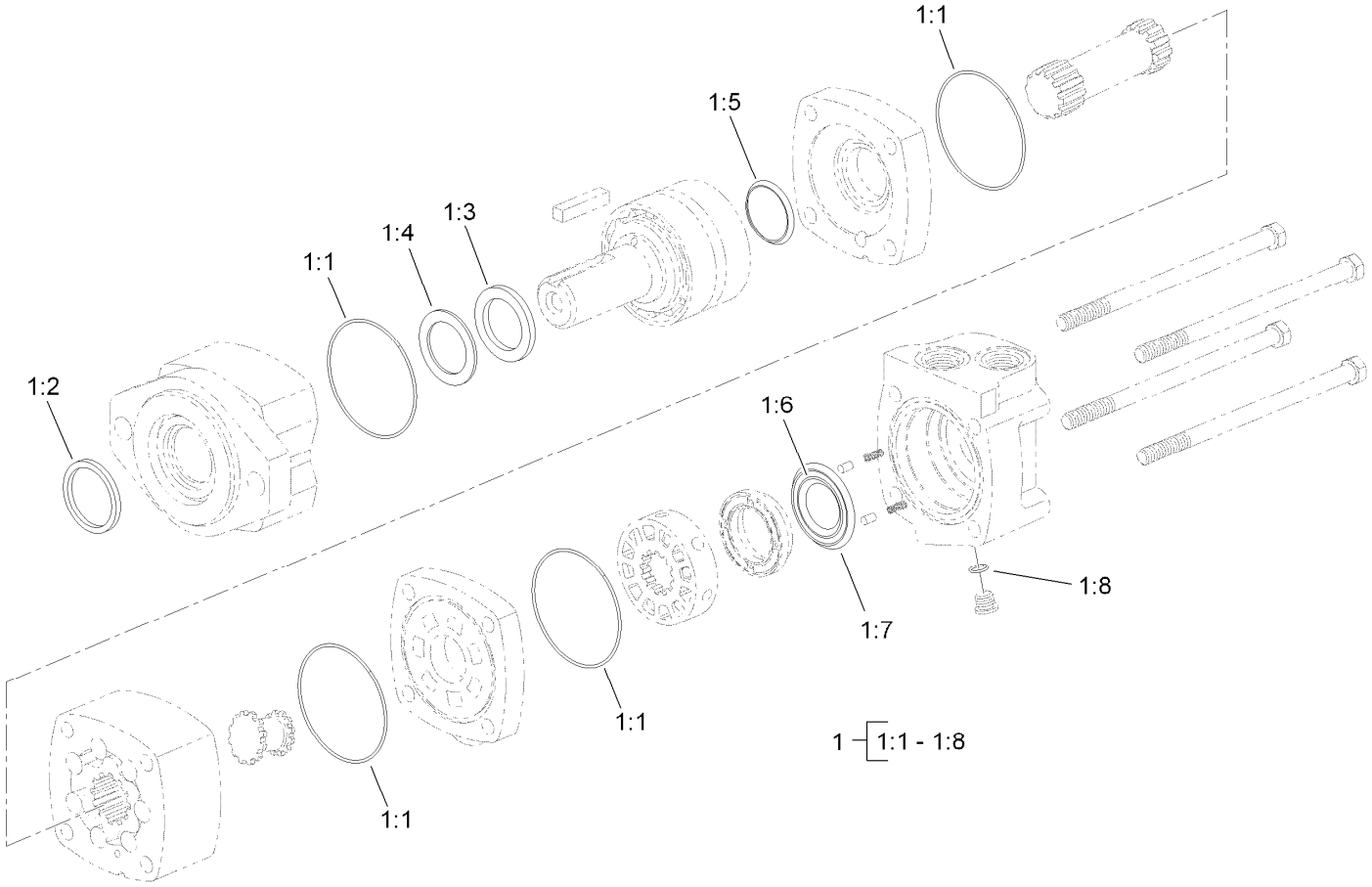

Hydraulic Motor Assembly No. T0000-5303

Ref.	*Part Number*	*Qty.*	*Description*
1	56-6890	1	Seal Kit
1:1		4	Seal ●
1:2		1	Exclusion Seal ●
1:3		1	Outer Face Seal ●
1:4		1	Inner Face Seal ●
1:5		1	Shaft Face Seal ●
1:6		1	Shaft Seal ●
1:7		1	Back-Up Washer ●
1:8		1	O-Ring ●

● Not serviced separately

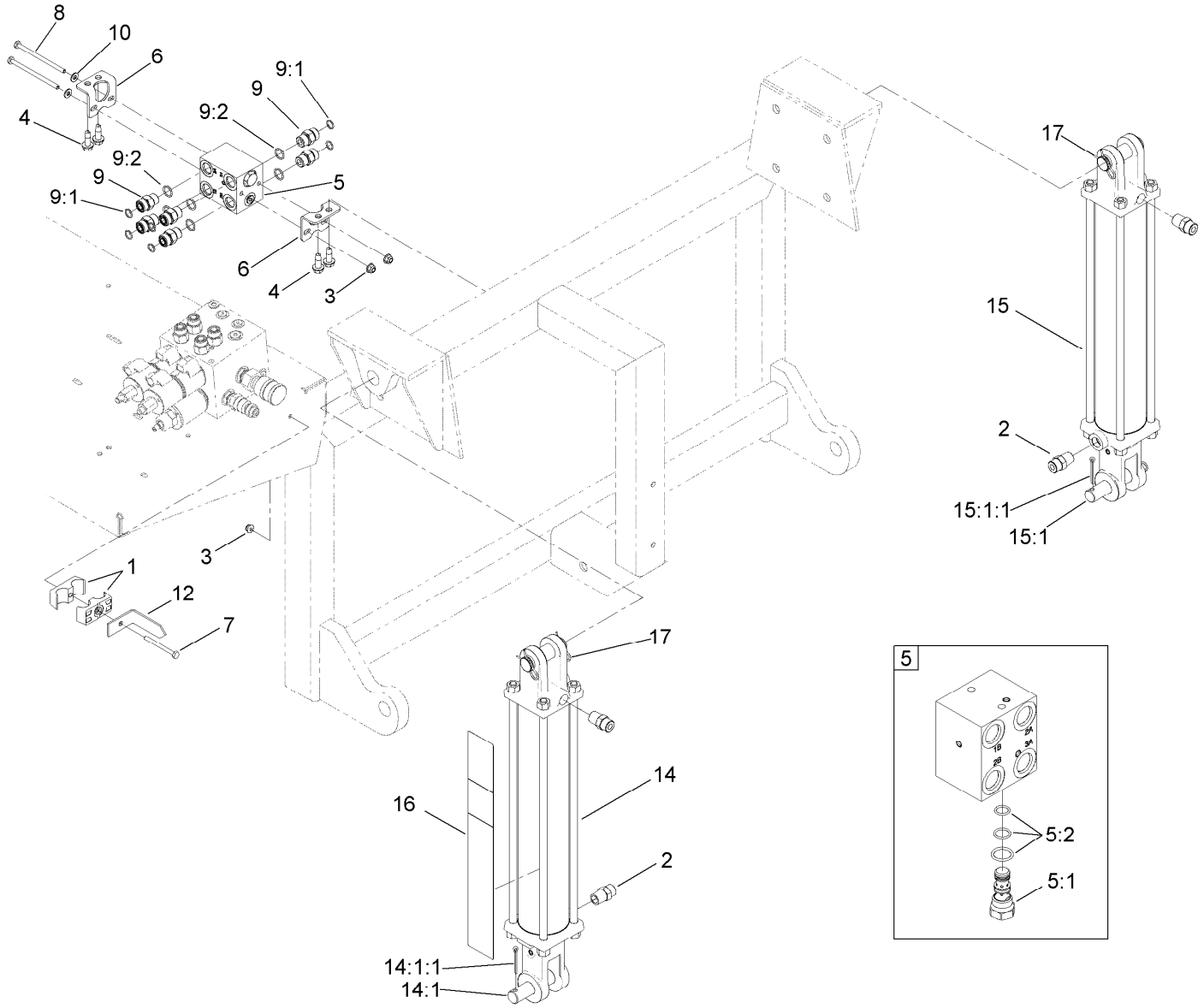

Hydraulic Cylinder and Manifold Block Assembly

Ref.	Part Number	Qty.	Description
1	56-7974	2	Clamp-Tube
2	93-5107	4	Fitting-Adapter
3	104-7201	3	Nut-Flange, NI
4	105-6245	4	Screw-Tapping
5	120-0849	1	Block-Manifold, Po Check
5:1	120-0873	1	Valve-Po Check
5:2	120-0886	1	Seal Kit
6	120-0875-03	2	Bracket-Mounting, Manifold
7	321-18	1	Screw-HH
8	321-34	2	Screw-HH
9	340-4	6	Fitting-HYD, Straight
9:1	237-30	1	O-Ring

Ref.	Part Number	Qty.	Description
9:2	237-79	1	O-Ring
10	3256-22	2	Washer-Flat
12	T36011570	1	Bar-Indicator, Lift
14	T56071160	1	HYD Cylinder ASM
14:1	125-0153	1	Pin Kit (Set Of Two)
14:1:1	3272-23	4	Pin-Cotter
15	T56071170	1	HYD Cylinder ASM
15:1	125-0153	1	Pin Kit (Set Of Two)
15:1:1	3272-23	4	Pin-Cotter
16	119-6863	1	Decal-Load Range
17	110-4439	2	Clip-Hairpin

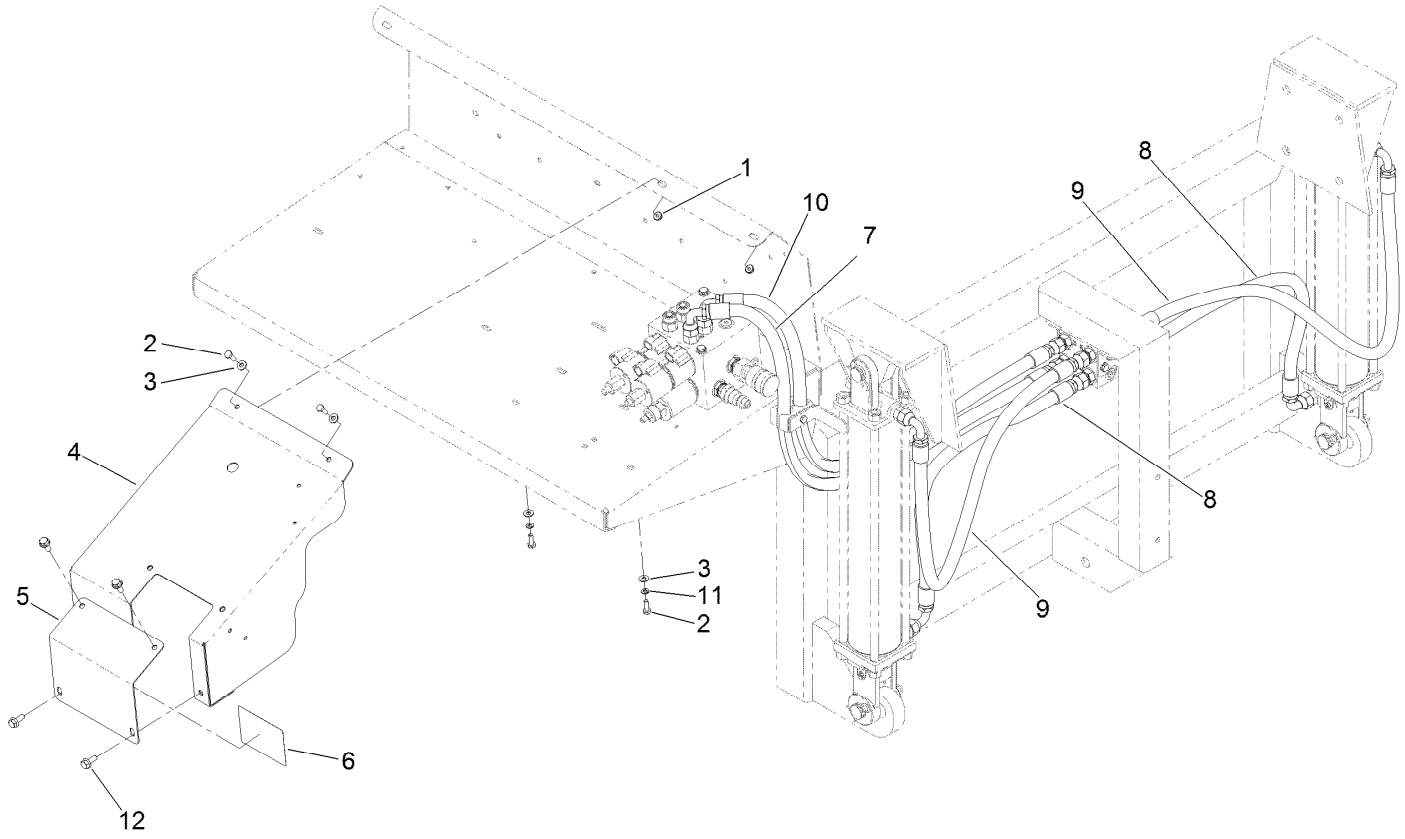

Block Guard and Hose Assembly

Ref.	Part Number	Qty.	Description
1	104-7201	2	Nut-Flange, NI
2	321-4	4	Screw-HH
3	3256-22	4	Washer-Flat
4	131-9367-01	1	Guard-Block
5	T0002-4578-01	1	Plate-Cover, Override
6	119-6832	1	Decal-Adjustment
7	120-0868	1	Hose-HYD
8	120-0869	2	Hose-HYD
9	120-0870	2	Hose-HYD
10	120-0872	1	Hose-HYD
11	3253-3	2	Washer-Lock
12	3234-47	4	Screw-HHF

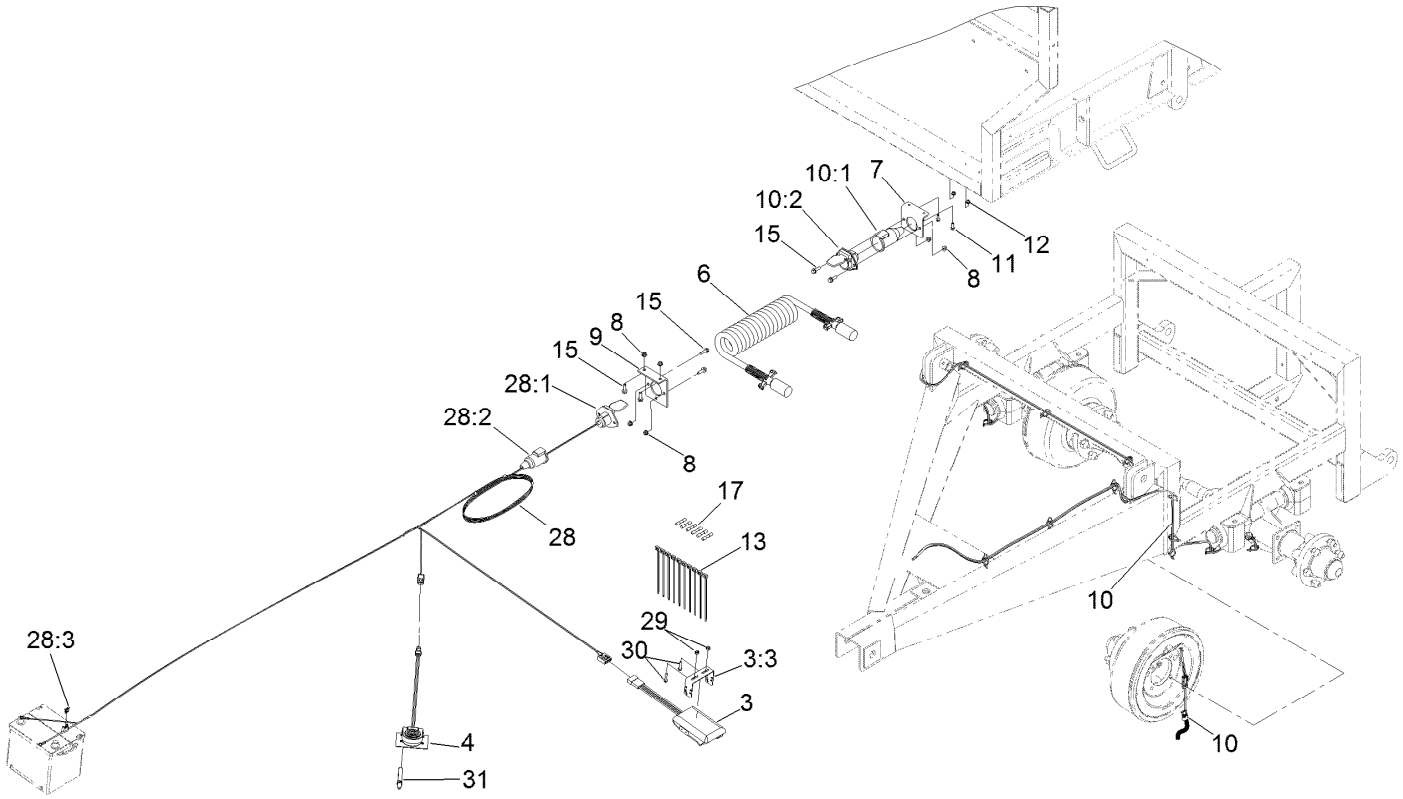

Brake Assembly

Ref.	Part Number	Qty.	Description
3	130-4230	1	Controller-Brake
3:3	125-0114	1	Bracket-Controller, Brake
4	125-0108	1	Control-Foot,
6	T58071132	1	Cable-Coil, 12 Ft.
7	120-0892	1	Bracket-Connector
8	104-8300	6	Nut-Flange, NI
9	T36016080	1	Bracket-Tractor
10	120-9438	1	Harness-Wire, Electric Brakes
10:1	120-0876	1	Boot-Socket
10:2	32160-322	1	Connector-Trailer, 7M
11	115-5103	2	Screw-HHF

Ref.	Part Number	Qty.	Description
12	104-7201	2	Nut-Flange, NI
13	3290-378	10	Tie-Cable
15	3234-29	6	Screw-HHF
17	32180-046	6	Splice-Heatshrink Covered
28	122-0075	1	Harness-Wire, Brake, Trailer
28:1	32160-322	1	Connector-Trailer, 7M
28:2	120-0876	1	Boot-Socket
28:3	218-578	1	Fuse-Blade, 10 Amp
29	3296-2	2	Nut-Lock, NI
30	106-9169	2	Screw-HWH
31	2412-42	1	Clamp-Hose

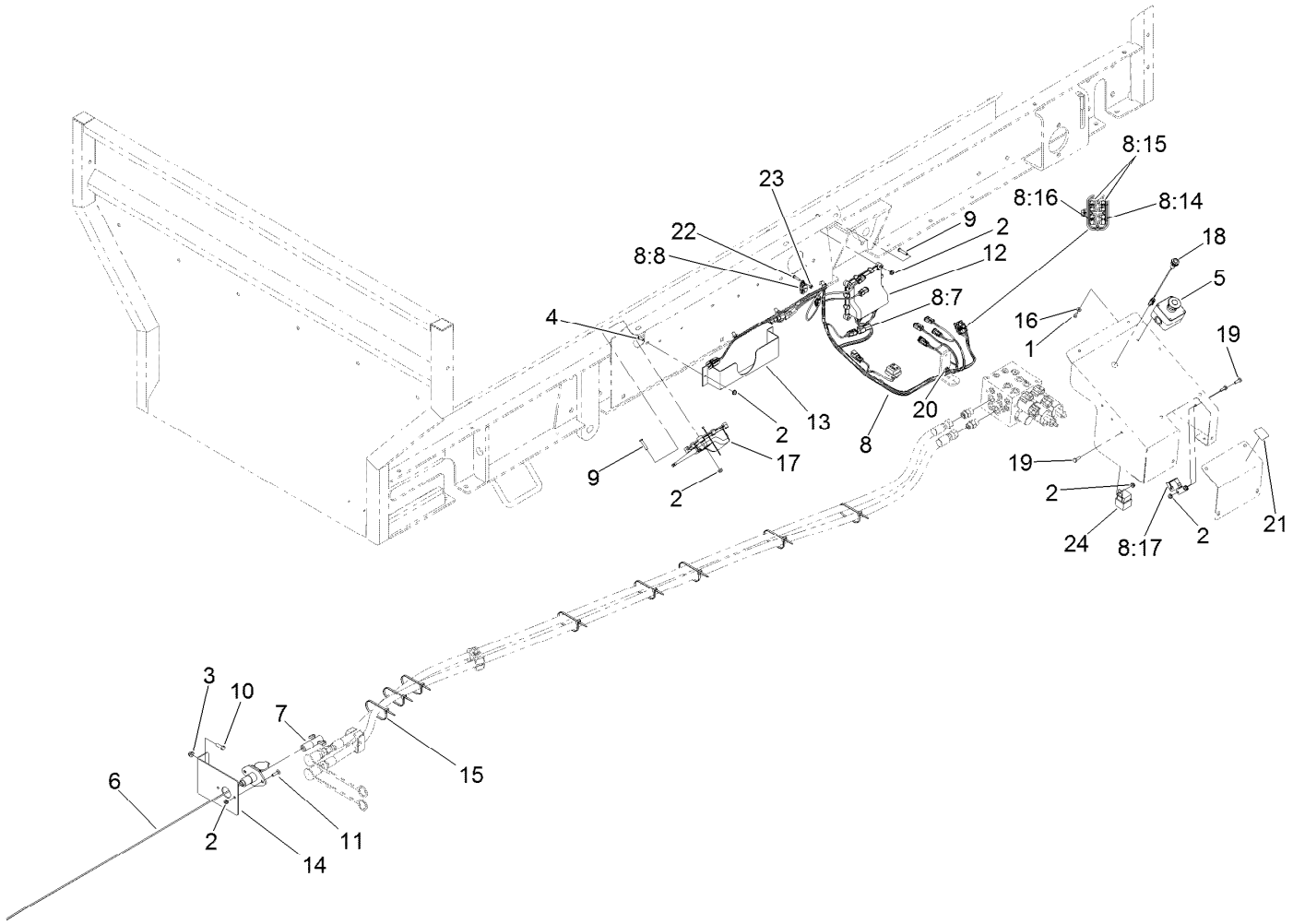

Wire Harness and Pocket Control Assembly

Ref.	Part Number	Qty.	Description
1	98-1375	2	Screw-HWH
2	104-7201	6	Nut-Flange, NI
3	104-8300	13	Nut-Flange, NI
4	119-6906	2	Screw-HSBH
5	119-6909	1	Stop-Emergency
6	120-0976	1	Harness-Wire, Power Lead
7	120-0926	1	Harness-Wire, Intermediate Power
8	122-0270	1	Harness-Wire
8:7	32180-043	2	Resistor-120 Ohm
8:8	32180-089	1	Cap-Plug, 3 Way
8:14	121-8861	1	Fuse-Mini Blade, 2 Amp
8:15	121-8865	2	Fuse-Mini Blade, 7.5 Amp
8:16	121-8867	1	Fuse-Mini Blade, 15 Amp
8:17	32180-179	1	Cover-Bussman
9	120-0834	8	Screw-HSBH
10	322-5	2	Screw-HH
11	3229-2	2	Screw-CARR
12	125-1360	1	Controller
13	T36016084	1	Pocket-Control, Wireless
14	T36054020	1	Bracket-Socket
15	3290-378	8	Tie-Cable
16	3256-14	2	Washer-Flat
17	125-1230	1	Controller
18	122-0630	1	Lamp-Led, Red Indicator
19	321-4	3	Screw-HH
20	32180-030	3	Clip-Tie
21	131-6766	1	Decal-Fuses
22	106-9169	1	Screw-HWH
23	3296-2	1	Nut-Lock, NI
24	99-7430	1	Relay

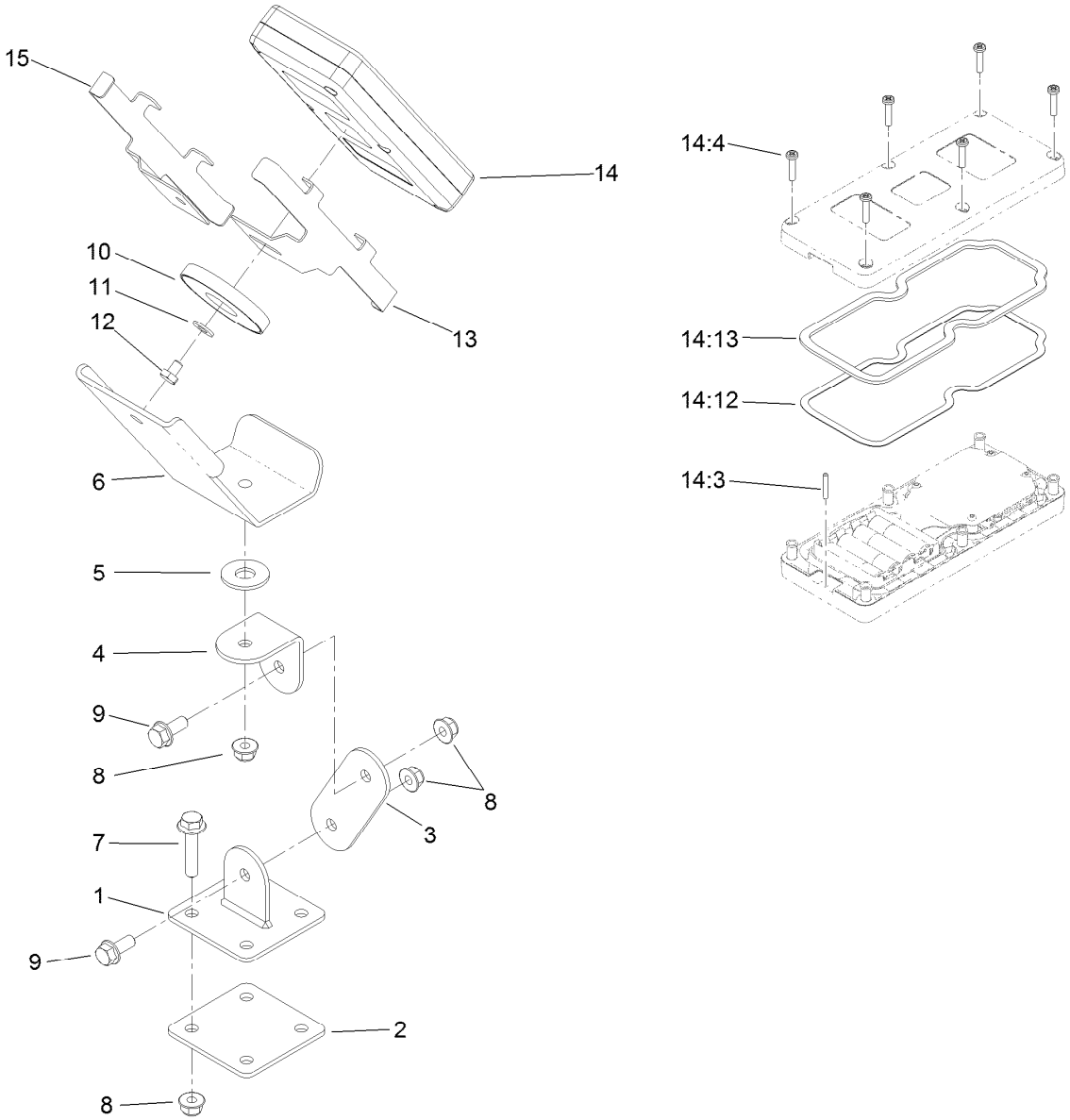

Wireless Remote Assembly

Ref.	Part Number	Qty.	Description
1	T0002-8707-01	1	Base-Swivel
2	T0002-8704-01	1	Plate-Base, Swivel
3	T0002-8710-01	1	Plate-Mount, Wireless
4	T0002-8712-01	1	Angle-Mount, Wireless
5	T0000-2623	1	Washer-Poly
6	T0002-8685-01	1	Mount-Controler
7	115-1794	4	Screw-HHF
8	104-8300	7	Nut-Flange, NI
9	3234-47	2	Screw-HHF
10	T0002-8729	1	Magnet-Ceramic, Encased

Ref.	Part Number	Qty.	Description
11	3256-22	1	Washer-Flat
12	321-1	1	Screw-HH
13	125-5962-03	1	Sleeve-Half
14	125-1200	1	Remote ASM
14:3	121-2818	1	Pin-Lanyard
14:4	119-6414	6	Screw-PPH
14:12	125-1225	1	Backer-Gasket, HH (Large)
14:13	125-1226	1	Gasket-HH (Large)
15	125-5960-03	1	Sleeve-Half

Attachments and Accessories

For 44954 MH-400EH2 Material Handler

Product Name	Model/Part
Material Delivery Unit	44935
Light Kit	44940
SH/EH Twin Spinner	44944
2-Wheel to 4-Wheel Brake Conversion Kit	44945

Notes:

Notes:

TORO®

Count on it.