FORM NO. 3318–529

TORO®

1232 Power Shift®

Snowthrower

Model No. 38590–7900001 & Up

Operator's Manual

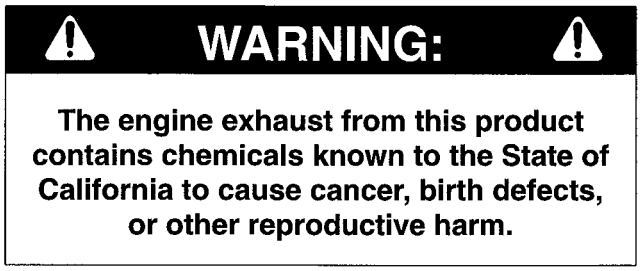
WARNING:
The engine exhaust from this product contains chemicals known to the State of California to cause cancer, birth defects, or other reproductive harm.

Figures

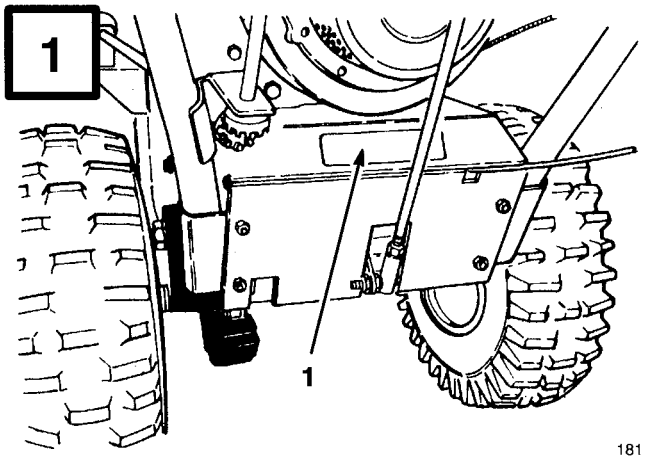

1. Model and serial number decal

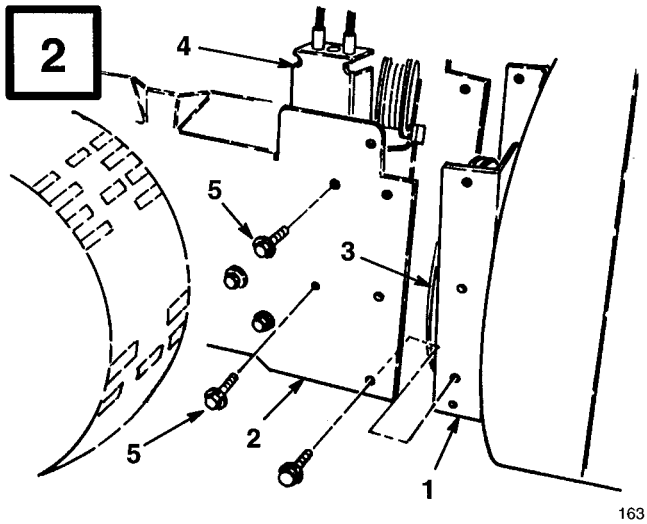

1. Auger housing
2. Engine frame
3. Impeller pulley
4. Idler pulley assembly
5. Mounting screws (2)

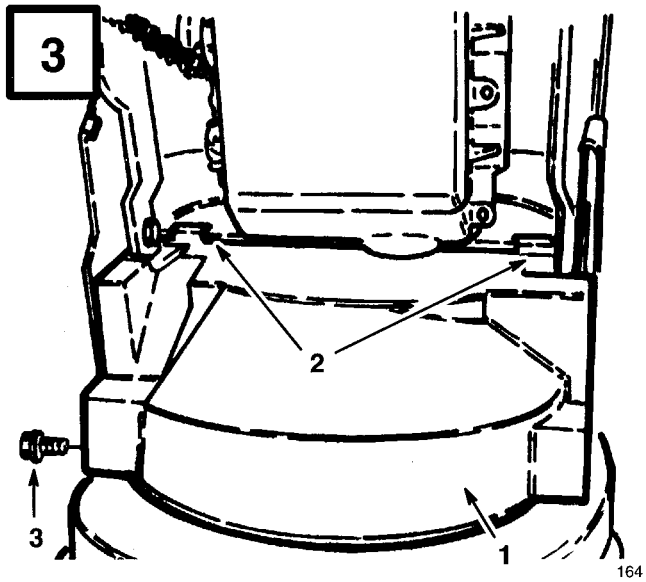

1. Lower belt cover (shown from bottom)
2. Mounting tabs
3. Flange head capscrew

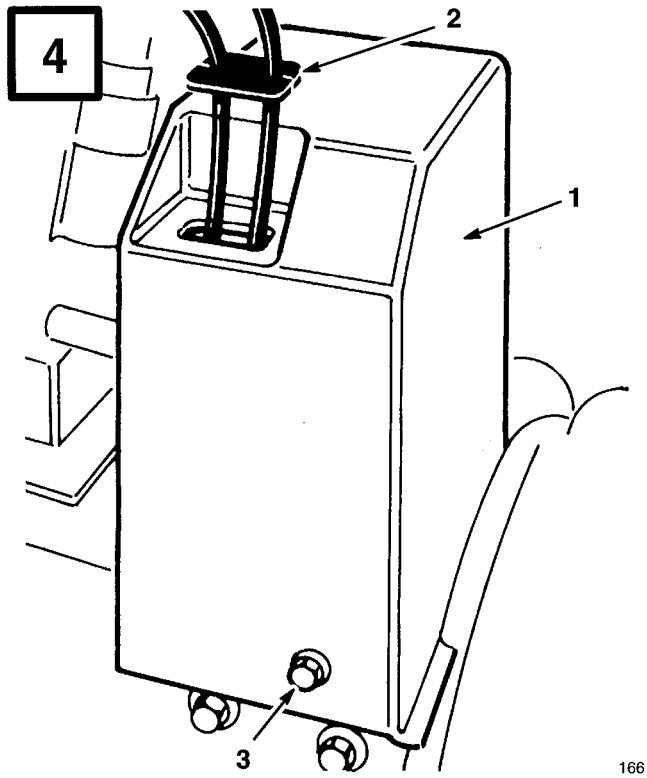

1. Upper belt cover
2. Cable cover
3. Flange head capscrew

©The Toro Company – 1996
All Rights Reserved

Printed in USA

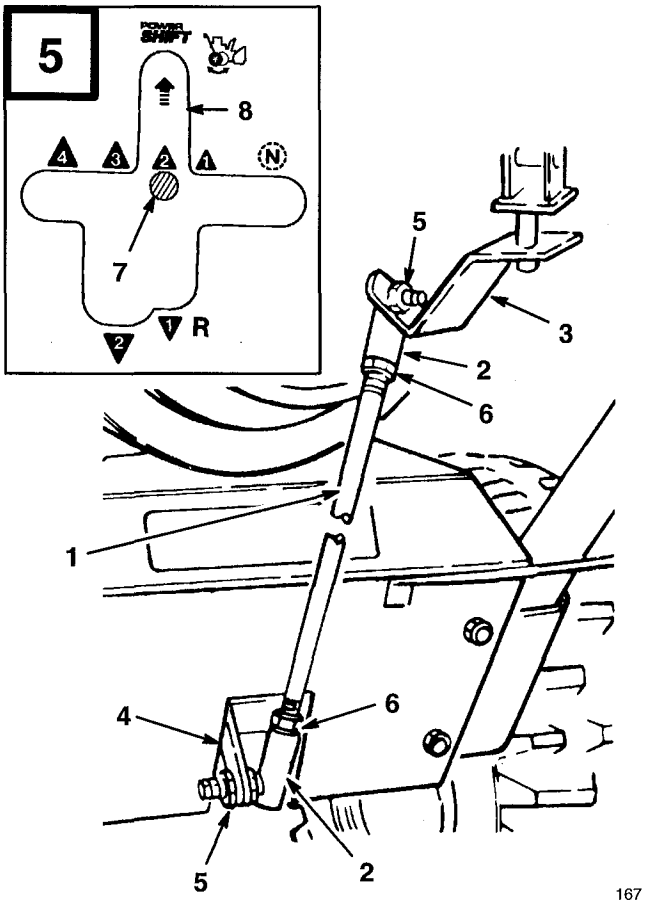

167

1. Shift rod
2. Ball joint
3. Shift bracket
4. Transmission lever
5. Locknut
6. Jam nut
7. Gear shift lever
8. Power Shift slot

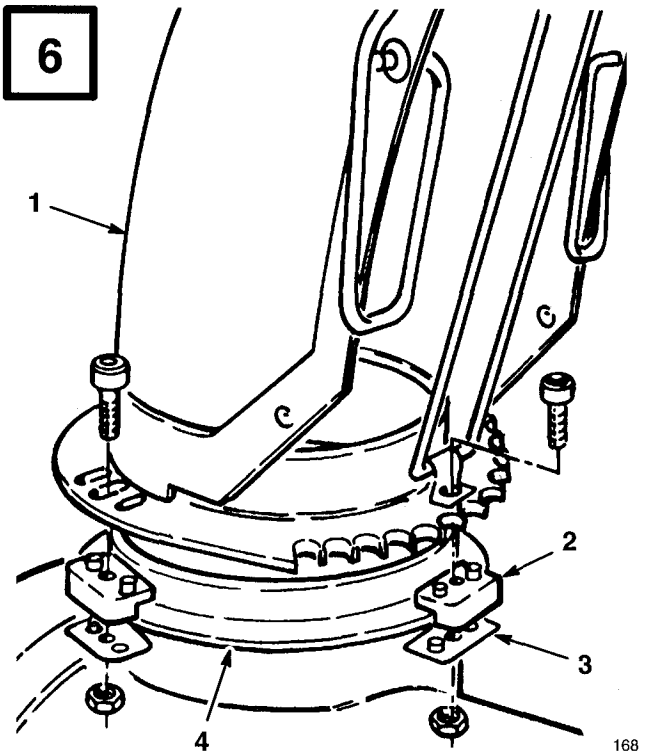

168

1. Discharge chute
2. Plastic chute retainer
3. Chute retainer plate
4. Chute ring

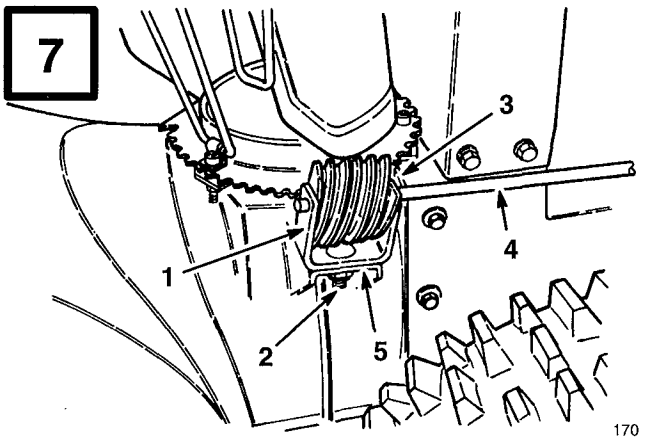

170

1. Gear bracket
2. Carriage bolt, flat washer & locknut
3. Worm gear
4. Chute gear rod
5. Mounting flange

8

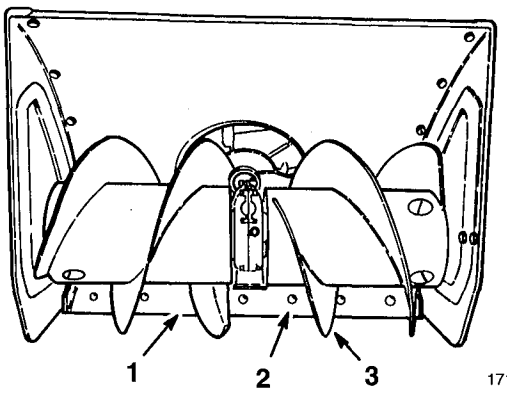

171

1. Scraper
2. Carriage bolt
3. Auger blades

9

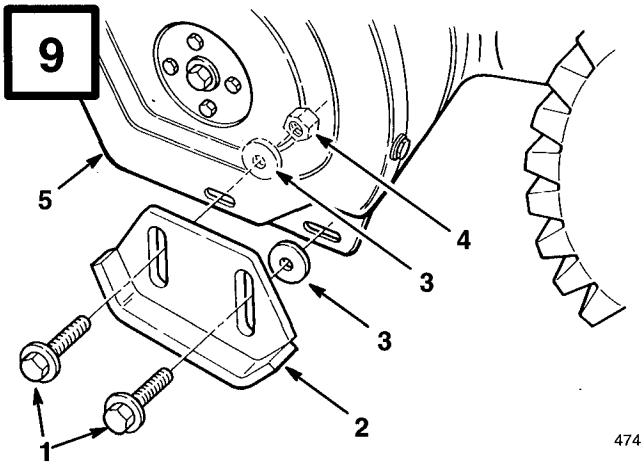

474

1. Flange bolts
2. Skid
3. Flat washers
4. Locknut
5. Sideplate

10

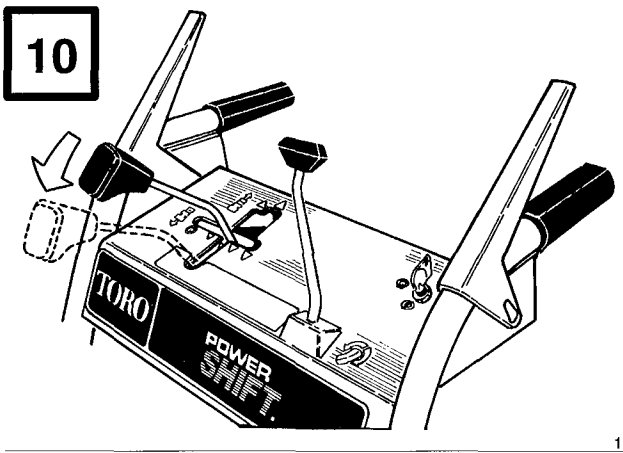

178

11

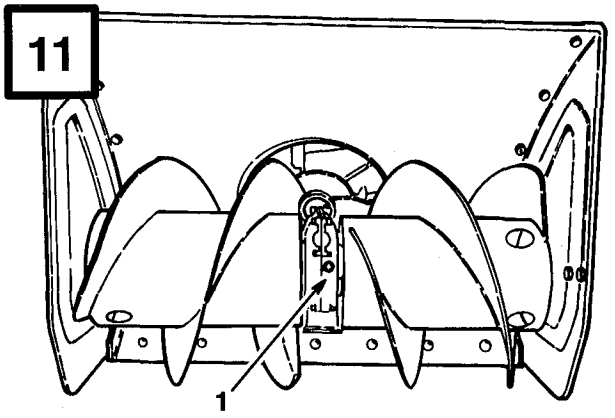

171

1. Pipe plug

12

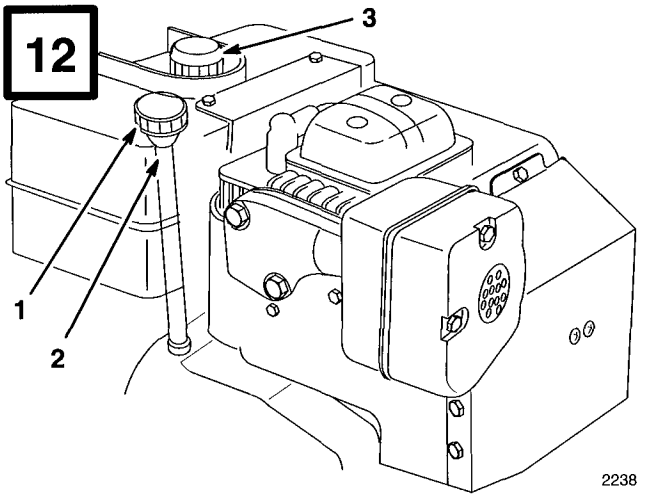

2238

1. Dipstick
2. Filler hole
3. Fuel tank cap

13

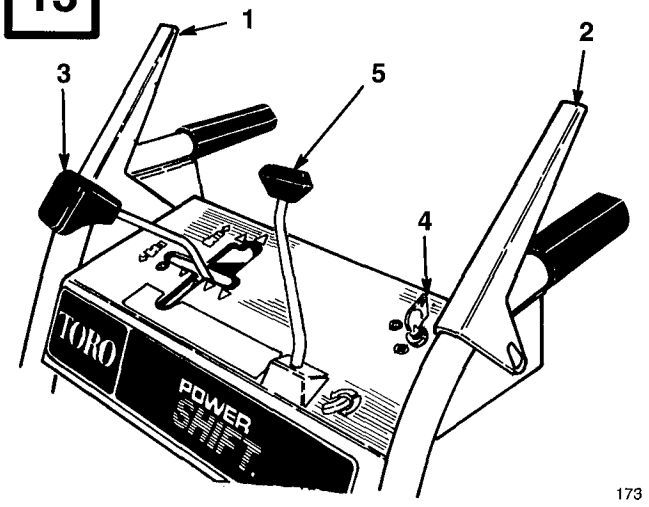

173

1. Auger/impeller control
2. Traction drive control
3. Speed shift control
4. Ignition switch
5. Discharge chute control

14

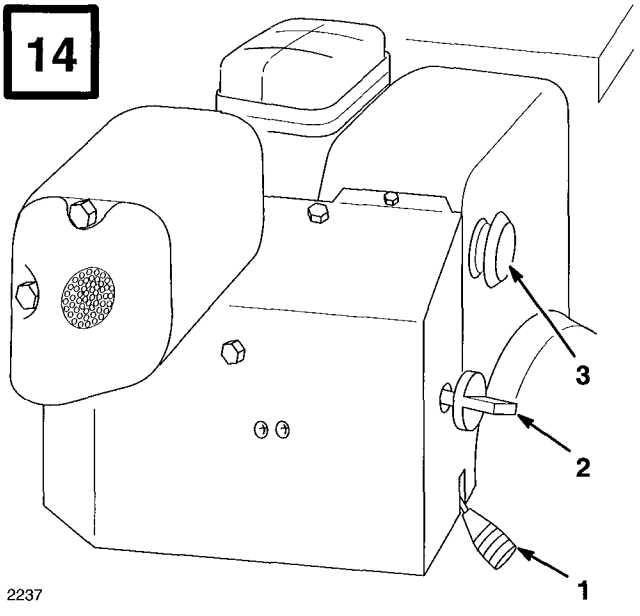

2237

1. Throttle
2. Choke
3. Primer

15

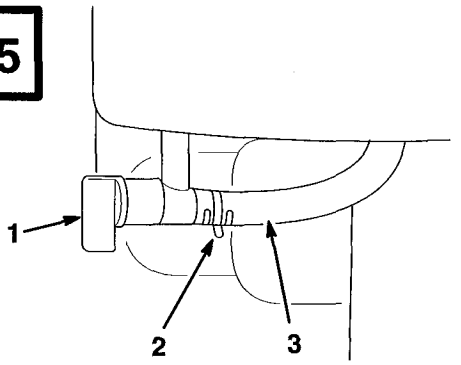

2236

1. Fuel shut-off valve
2. Hose clamp
3. Fuel line

16

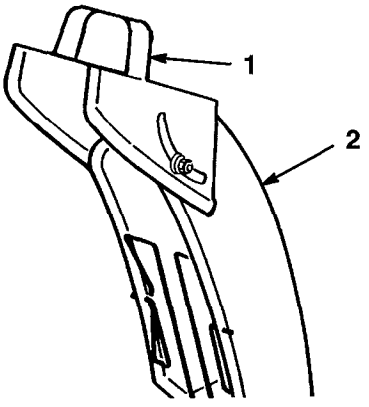

176

1. Deflector handle
2. Discharge chute

17

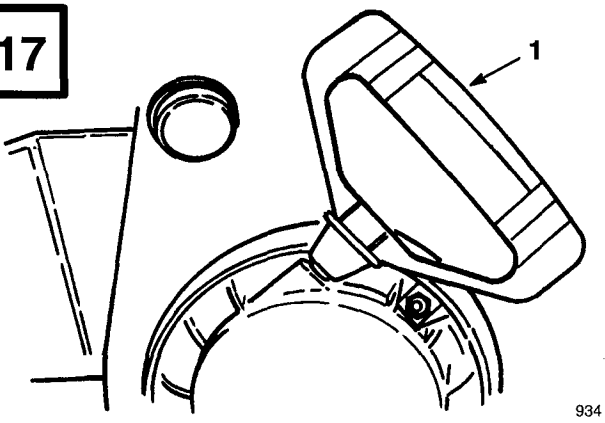

934

1. Recoil starter

18

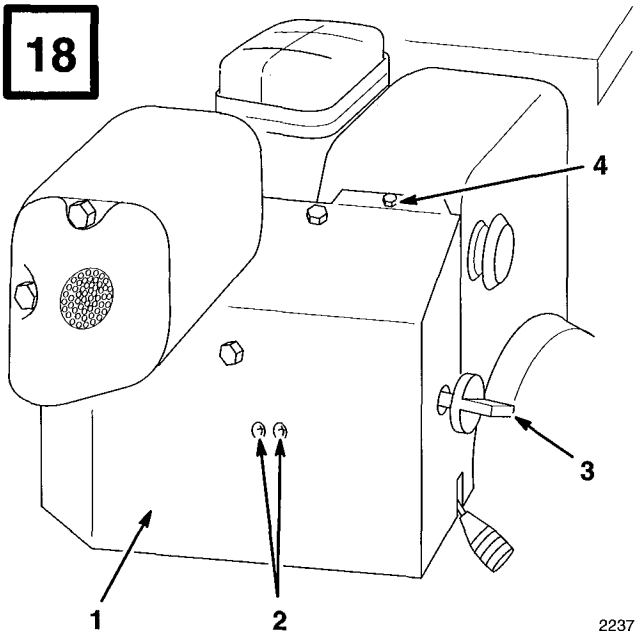

2237

1. Heater box
2. Phillips screw (2)
3. Choke knob
4. Hex head screw (1)

19

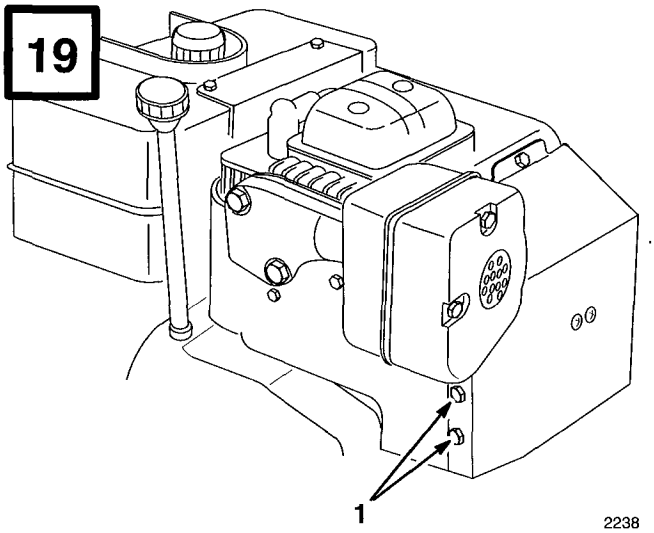

2238

1. Hex head screw (2)

20

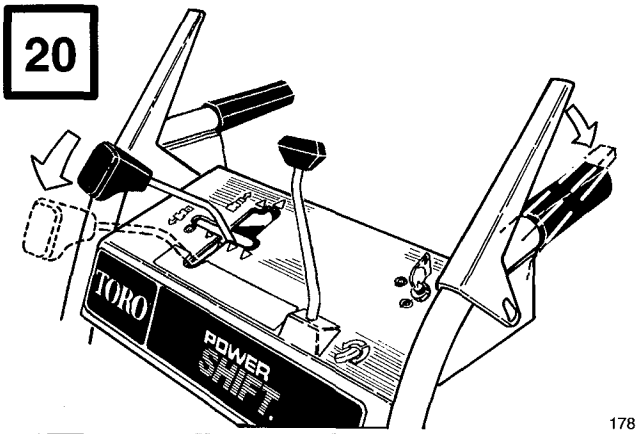

178

21

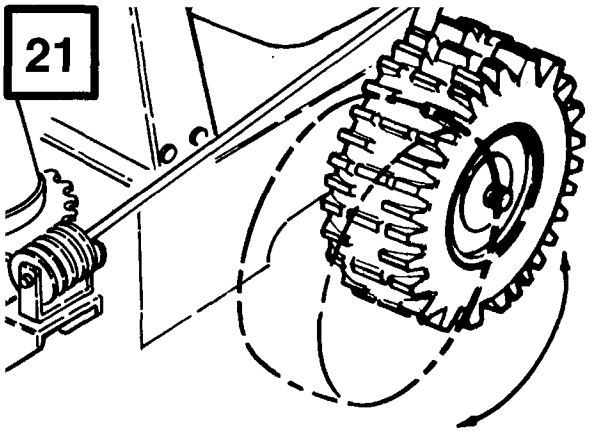

179

22

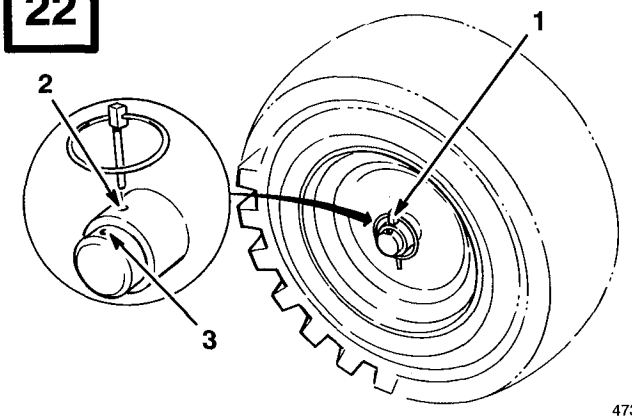

473

1. Axle pin
2. Inner axle hole
3. Outer axle hole and wheel hub

23

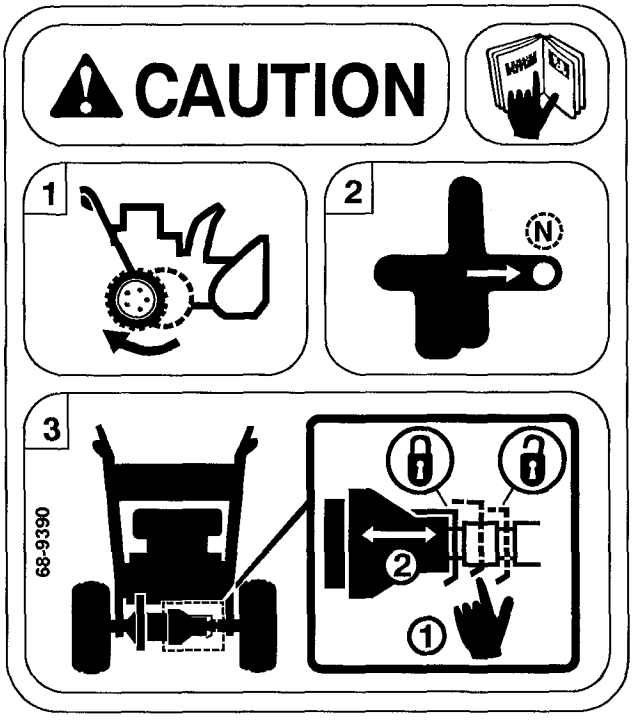

1. Move wheels to rear
2. Shift transmission to neutral
3. Push lock spring up to disengage from shaft groove; then slide coupling to desired position.

24

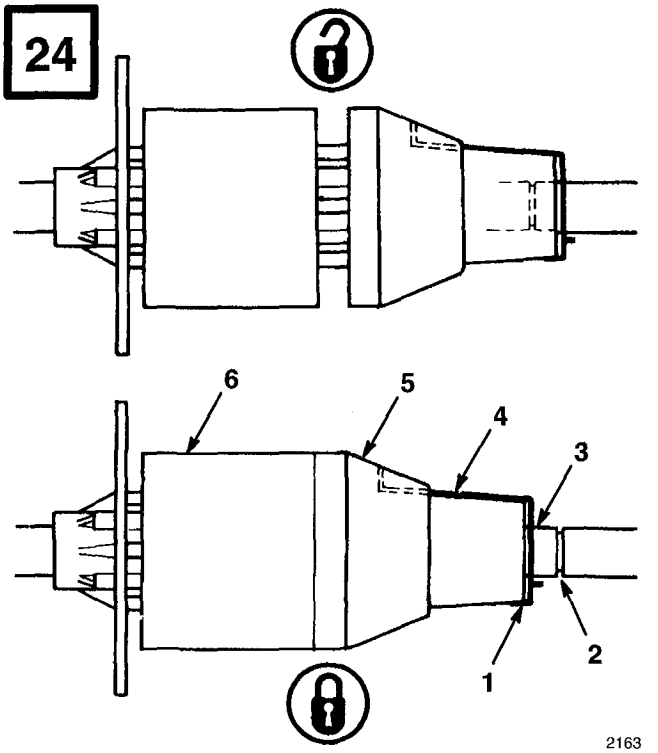

1. Release tab – lock spring
2. Right hand shaft groove (unlock position)
3. Left hand shaft groove (lock position)
4. Lock spring
5. Coupling
6. Differential

25

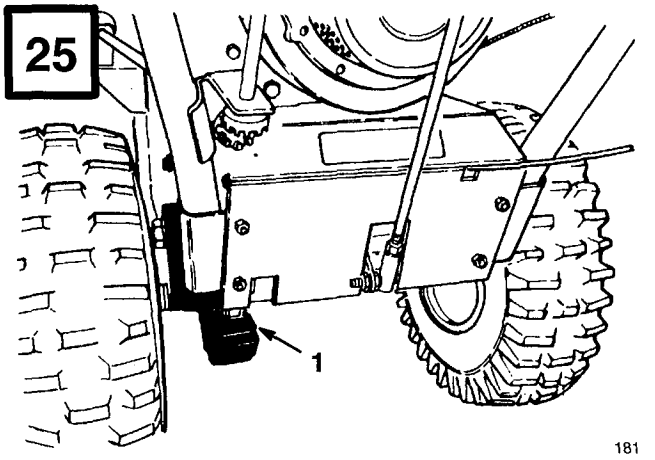

1. Drive chain

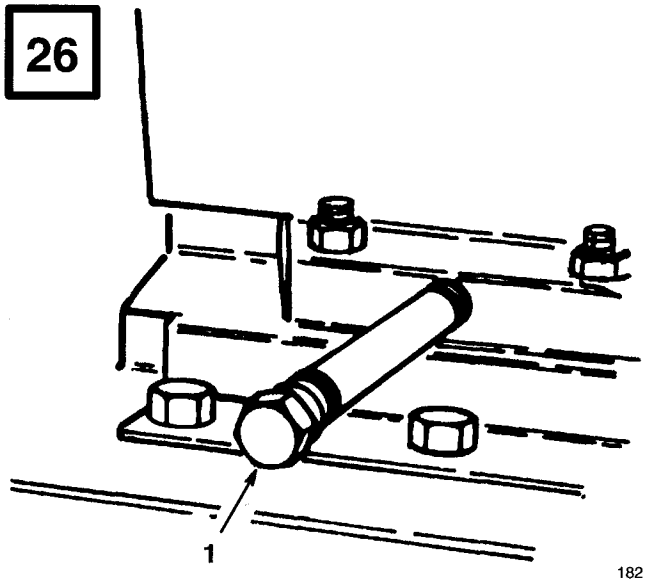

1. Drain cap

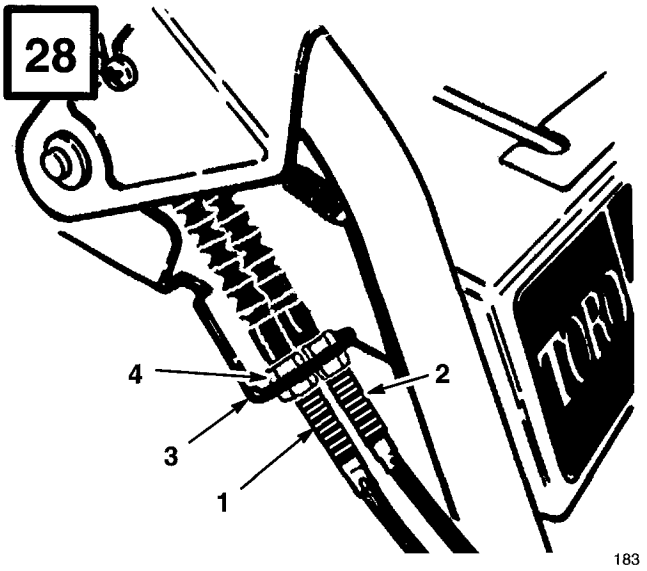

1. Auger/impeller cable (outer cable)
2. Traction cable (inner cable)
3. Mounting bracket
4. Jam nut

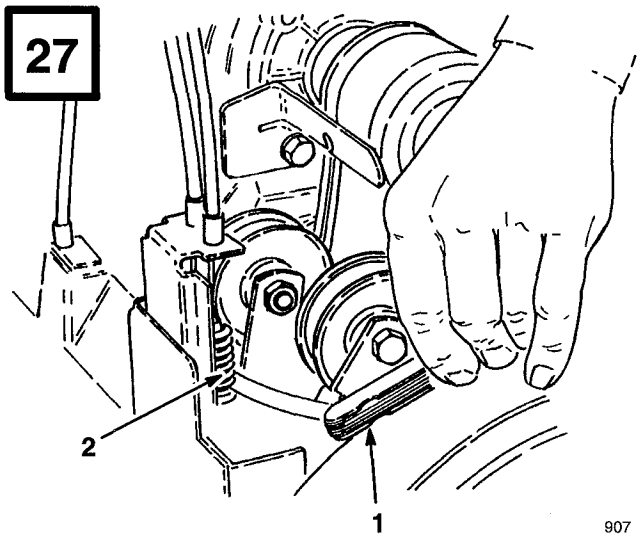

1. Feeler gauge
2. Center of spring

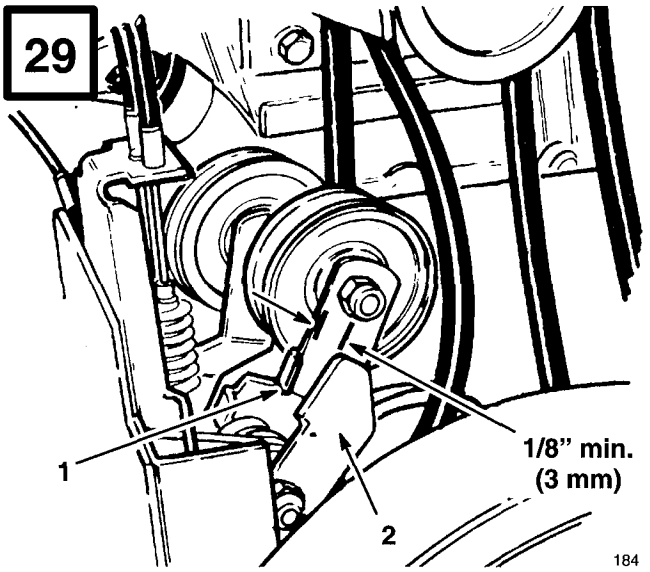

1. Impeller idler arm
2. Brake arm

30

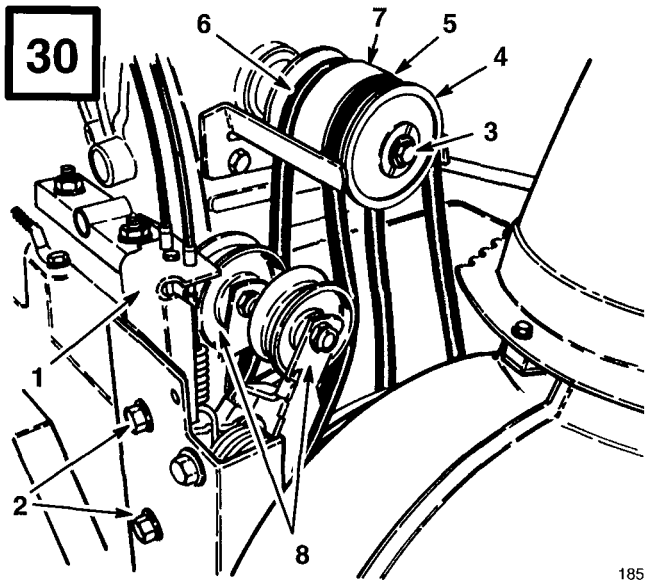

185

1. Idler pulley assembly
2. Flange head capscrews (2)
3. Capscrew & lockwasher
4. Half sheave
5. Auger/impeller belt
6. Traction belt
7. Middle pulley section
8. Idler pulley (2)

31

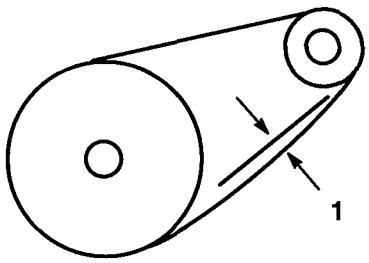

186

1. 1/8" – 3/8" deflection

32

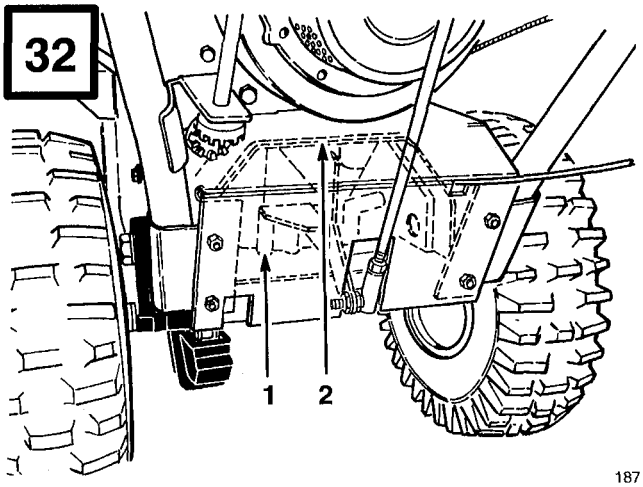

187

1. Transmission
2. Transmission frame

33

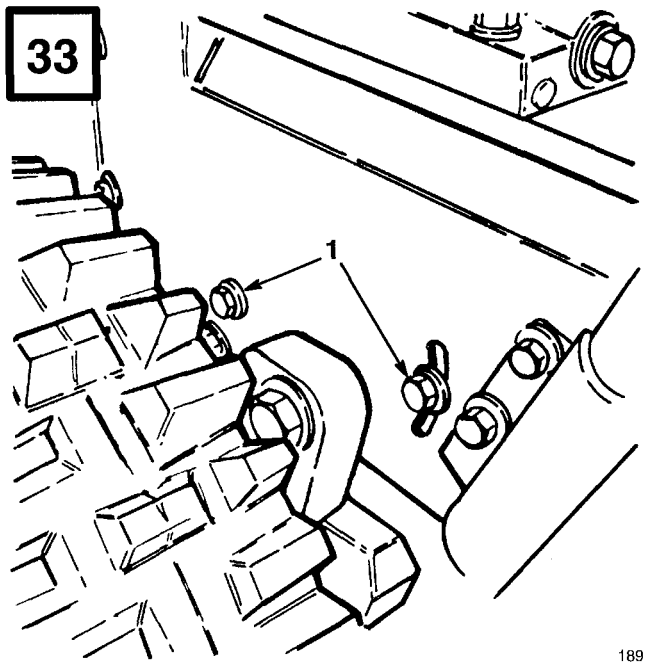

189

1. Flange head capscrews

34

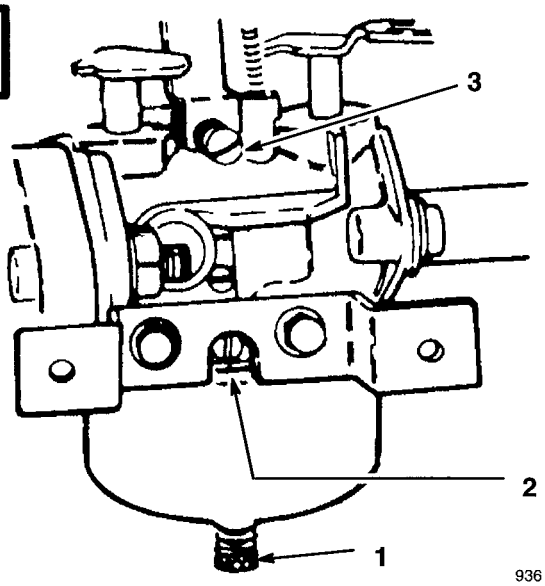

936

1. Power adjusting screw
2. Idle mixture screw
3. Idle speed screw

35

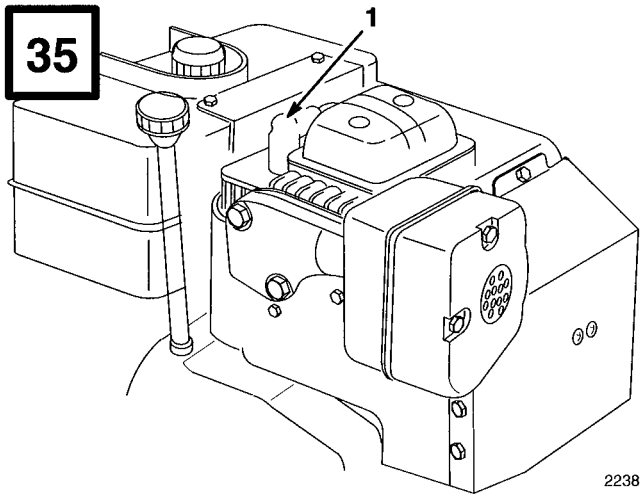

2238

1. Spark plug wire

36

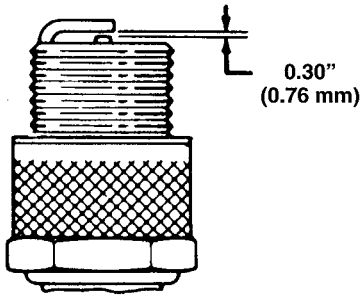

110

Contents

	Page
Introduction	1
Safety	2
Before Operating	2
While Operating	3
Maintaining Snowthrower	3
Safety Decals and Instructions	6
Loose Parts	7
Accessories	7
Assembly	8
Mount Auger Housing	8
Install Shift Rod	8
Install Discharge Chute	8
Install Chute Control Gear	8
Check Tire Pressure	9
Install Skids	9
Check Auger Gear Box Oil	9
Before Starting	9
Fill Crankcase With Oil	9
Fill Fuel Tank With Gasoline	10
Operation	11
Controls	11
Starting/Stopping Engine	12
Power Shift Operation	13
Free Wheeling Or Self-propelled Drive	13
Differential Operation	13
Operating Tips	13
Adjusting Scraper	14
Adjusting Skids	15
Maintenance	15
Draining Gasoline	15
Lubricating Snowthrower	16
Changing Crankcase Oil	16
Auger Gear Box Oil	16
Adjusting Auger/Impeller Drive Belt	16
Adjusting Traction Drive Belt	17
Replacing Drive Belts	17
Adjusting Drive Chain	18
Adjusting Carburetor	19
Replacing Spark Plug	20
Storage	20
Warranty	22

Introduction

Thank you for purchasing a Toro product.

All of us at Toro want you to be completely satisfied with your new product, so feel free to contact your local Authorized Service Dealer for help with service, genuine Toro parts, or other information you may require.

Whenever you contact your Authorized Service Dealer or the factory, always know the model and serial numbers of your product. These numbers will help the Service Dealer or Service Representative provide exact information about your specific product. You will find the model and serial number decal located in a unique place on the product (Fig. 1).

For your convenience, write the product model and serial numbers in the space below.

Model No. _____

Serial No. _____

Read this manual carefully to learn how to operate and maintain your product correctly. Reading this manual will help you and others avoid personal injury and damage to the product. Although Toro designs, produces and markets safe, state-of-the-art products, you are responsible for using the product properly and safely. You are also responsible for training persons who you allow to use the product about safe operation.

The Toro warning system in this manual identifies potential hazards and has special safety messages that help you and others avoid personal injury, even death. DANGER, WARNING and CAUTION are signal words used to identify the level of hazard. However, regardless of the hazard, be extremely careful.

DANGER signals an extreme hazard that will cause serious injury or death if the recommended precautions are not followed.

WARNING signals a hazard that may cause serious injury or death if the recommended precautions are not followed.

CAUTION signals a hazard that may cause minor or moderate injury if the recommended precautions are not followed.

Two other words are also used to highlight information. "Important" calls attention to special mechanical information and "Note" emphasizes general information worthy of special attention.

Safety

To ensure maximum safety, best performance, and to gain knowledge of the product, it is essential that you or any other operator of the snowthrower read and understand the contents of this manual before the motor is ever started. Pay particular attention to the safety alert symbol ⚠ which means CAUTION, WARNING OR DANGER — "personal safety instruction." Read and understand the instruction because it has to do with safety. Failure to comply with instruction may result in personal injury.

The following instructions are comparable to the Instructions For Safe Snowthrowing adopted by the American National Standards Institute (ANSI). The snowthrower is designed and tested to offer reasonably safe service; however, failure to comply with the following instructions **MAY RESULT IN PERSONAL INJURY.**

Before Operating

1. Read and understand the contents of this manual before operating the snowthrower. Become familiar with all controls and know how to stop the engine quickly.
2. Never allow children to operate the snowthrower. Adults should operate the snowthrower only after reading this manual.
3. Keep everyone, especially children and pets, away from snowthrower and area of operation.
4. Inspect area thoroughly where snowthrower will be used. Remove doormats, sleds, boards, sticks, wire, and any other foreign objects which might be picked up and thrown by the snowthrower.
5. Keep all shields and safety devices in place. If a shield, safety device or decal is illegible, damaged or lost, repair or replace it before beginning operation. Also, tighten any loose nuts, bolts or screws.
6. Wear adequate winter clothing and rubber boots that will ensure proper footing on slippery surfaces. Do not wear loose fitting clothing that could possibly get caught in moving parts.
7. Always wear safety glasses or eye shields during operation or while performing an adjustment or repair to protect eyes from foreign objects that may be thrown from the machine.
8. Adjust both skids so auger housing clears gravel or crushed rock surfaces.
9. Before starting the engine, move speed shift control to N (neutral) and ensure that auger/impeller control and traction drive control are in disengaged position.
10. Always use a grounded, three wire plug and cord to start snowthrower equipped with an electric starter. Extension cord must be connected to a properly grounded outlet.
11. Fill fuel tank with gasoline before starting the engine. Avoid spilling any gasoline. Because gasoline is highly flammable, handle it carefully. **DO NOT SMOKE WHILE HANDLING GASOLINE.**
    A. Use an approved gasoline container.
    B. Fill fuel tank outdoors, not indoors. **NEVER ADD FUEL TO AN ENGINE THAT IS RUNNING OR HOT.** Engine must be cool to reduce potential fire hazard.

C. Open doors if engine will be started in the garage because exhaust fumes are dangerous and could possibly be deadly. Do not run engine indoors.

D. Wipe up any spilled gasoline. Reinstall gasoline container cap and snowthrower fuel tank cap securely before starting the engine.

While Operating

12. **ROTATING IMPELLER OR AUGER CAN CUT OFF OR INJURE FINGERS OR HANDS. STAY BEHIND THE HANDLES AND AWAY FROM DISCHARGE OPENING WHILE OPERATING THE SNOWTHROWER. KEEP FACE, HANDS, FEET, AND ANY OTHER PART OF YOUR BODY OR CLOTHING AWAY FROM CONCEALED, MOVING OR ROTATING PARTS.**

13. **BEFORE ADJUSTING, CLEANING, REPAIRING, AND INSPECTING THE SNOWTHROWER, AND BEFORE UNCLOGGING THE DISCHARGE CHUTE, SHUT ENGINE OFF AND WAIT FOR ALL MOVING PARTS TO STOP. ALSO, PULL WIRE OFF SPARK PLUG AND KEEP WIRE AWAY FROM THE PLUG TO PREVENT ACCIDENTAL STARTING. USE A STICK, NOT YOUR HAND, TO REMOVE OBSTRUCTIONS FROM DISCHARGE CHUTE.**

14. Before leaving the operator's position (behind handles), rotate ignition key to OFF and wait for all moving parts to stop. Remove key from switch if snowthrower will be left unattended.

15. Allow engine to warm up outdoors before clearing snow.

16. Operate the snowthrower only when there is good visibility or light. Always maintain secure footing and balance and keep a firm grip on the handles, especially when operating in reverse. Walk; never run.

17. Be attentive when using the snowthrower, and stay alert for holes in the terrain and other hidden hazards. Be careful when clearing snow from a gravel drive because stones could be picked up and thrown if skids are not adjusted so auger housing clears all rocks.

18. Do not make any adjustments while the engine is running.

19. Never direct discharge of snow or operate snowthrower near bystanders, glass enclosures, automobiles and trucks, window wells or a drop-off without proper adjustment of the snow chute and deflector.

20. Clear snow from slopes by going up and down, never across the face. Use caution when changing directions. Use lower gear and rear wheel position when operating on slopes. Never clear snow from steep slopes.

21. Do not overload the snowthrower by clearing snow at too fast a rate.

22. **DO NOT USE SNOWTHROWER ON A ROOF.**

23. If a foreign object is hit or snowthrower vibrates abnormally, stop engine by turning key to OFF and wait for all moving parts to stop. Pull wire off spark plug and check snowthrower immediately for possible damage, an obstruction or loose parts. Vibration is generally a sign of trouble. Repair any damage before starting engine and operating snowthrower again.

24. Do not touch engine while it is running or soon after it is stopped because the engine will be hot enough to cause a burn. Do not add oil or check oil level in crankcase when engine is running.

25. Never operate snowthrower at high transport speeds on slippery surfaces. Use care when backing.

Maintaining Snowthrower

26. Perform only those maintenance instructions described in this manual. Shut engine off before performing any maintenance service or adjustment. Additionally, pull wire off spark plug and keep wire away from plug to prevent accidental starting. If major repairs are ever needed, contact your local Authorized TORO Service Dealer for assistance.

27. Keep snowthrower in safe operating condition by keeping nuts, bolts, and screws tight. Check engine mounting bolts frequently to ensure they are tight.

28. Maintain or replace safety and instruction labels, as necessary.

29. Do not overspeed the engine by changing governor settings.

30. Run the snowthrower a few minutes after throwing snow to prevent freeze-up of the collector/impeller.

31. Allow engine to cool before storing in an enclosure such as a garage or storage shed. **NEVER STORE SNOWTHROWER IN HOUSE (LIVING AREA) OR BASEMENT BECAUSE GASOLINE AND FUMES ARE HIGHLY FLAMMABLE, EXPLOSIVE, AND DANGEROUS IF INHALED.** Do not store snowthrower near any open flame or where gasoline fumes may be ignited by a spark.

32. When storing the snowthrower for an extended time—off-season storage or 30 days—drain gasoline from fuel tank to prevent a potential hazard. Store gasoline in a safety-approved red metal container. Remove key from ignition switch when storing snowthrower. Store key in a memorable place.

33. At the time of manufacture, the snowthrower conformed with or exceeded OPEI safety standards in effect for snowthrowers. Therefore, to ensure best performance and safety, purchase genuine TORO replacement parts and accessories to keep the TORO all TORO. **NEVER USE "WILL FIT" REPLACEMENT PARTS AND ACCESSORIES.** The TORO logo assures genuineness.

34. For safety reasons, use only those accessories and attachments recommended by The TORO Company to ensure continued safety certification of the product. Using unapproved accessories and attachments could contribute to a potential hazard.

BEFORE OPERATING

Read and understand the contents of this manual before operating the snowthrower. Become familiar with all controls and know how to stop the engine quickly.



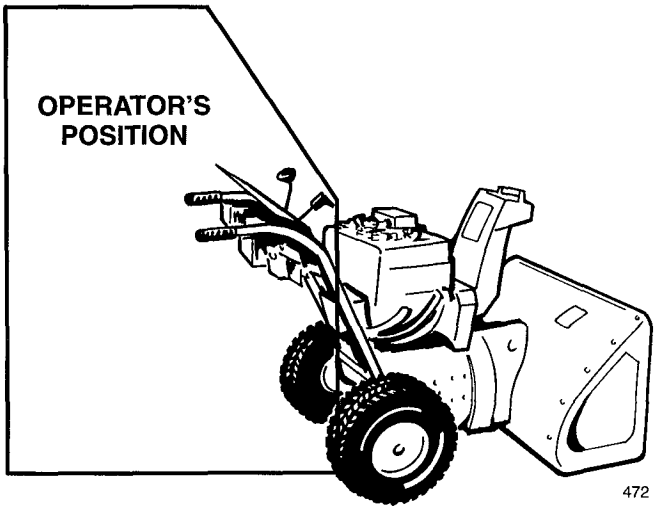

472

CAUTION: IMPROPER USE MAY RESULT IN LOSS OF FINGERS, HANDS OR FEET.

HIGH SPEED IMPELLER WITHIN 2 INCHES OF OPENING



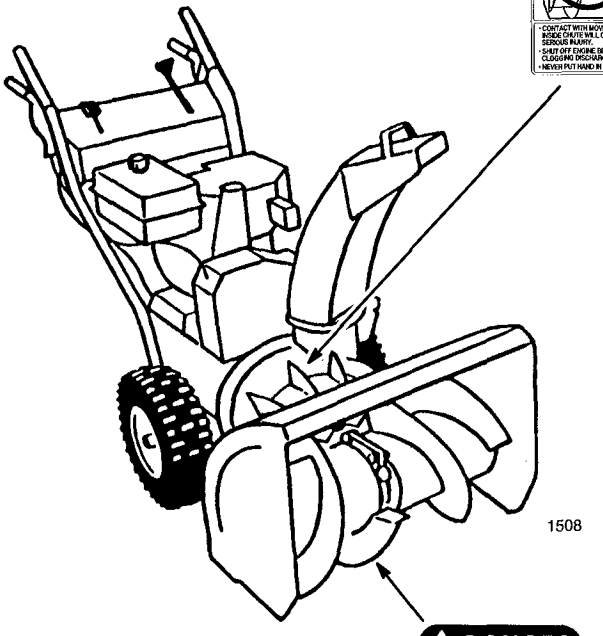

1508



LOW SPEED AUGER HAS MOVING PINCH POINT, CLOSE TO OPENING.

Safety Decals and Instructions



ON AUGER HOUSING
(Part No. 53-7670)

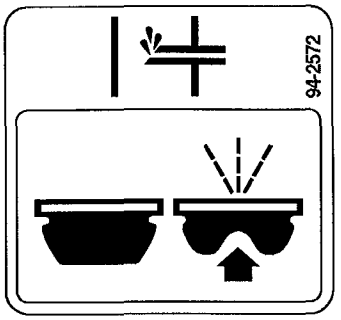

NEXT TO PRIMER
(Part No. 94–2572)



ON CHUTE
(Part No. 94–8079)

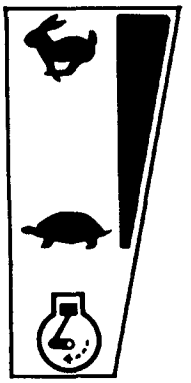

ALONGSIDE
THROTTLE
(Part No. 63-3190)

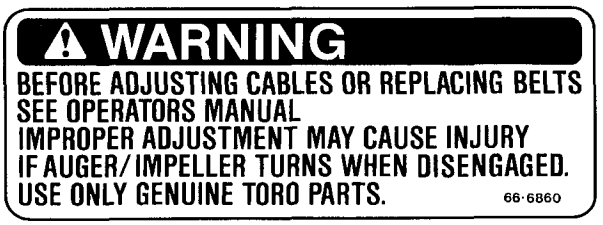

ON ENGINE BASE
(Part No. 66-6860)



ON ENGINE
(Part No. 66-6840)

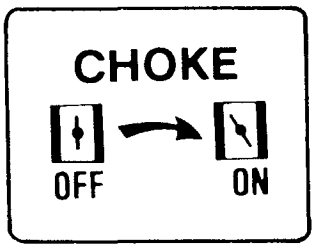

ON ENGINE
(Part No. 63-2400)

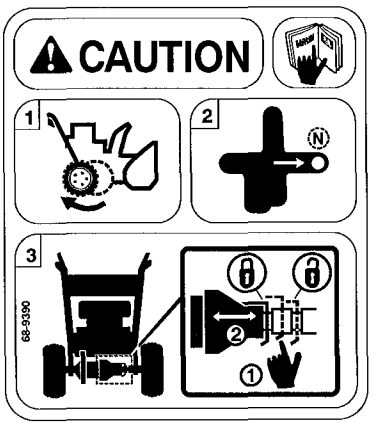

ON REAR OF TRACTION UNIT
(Part No. 68-9390)

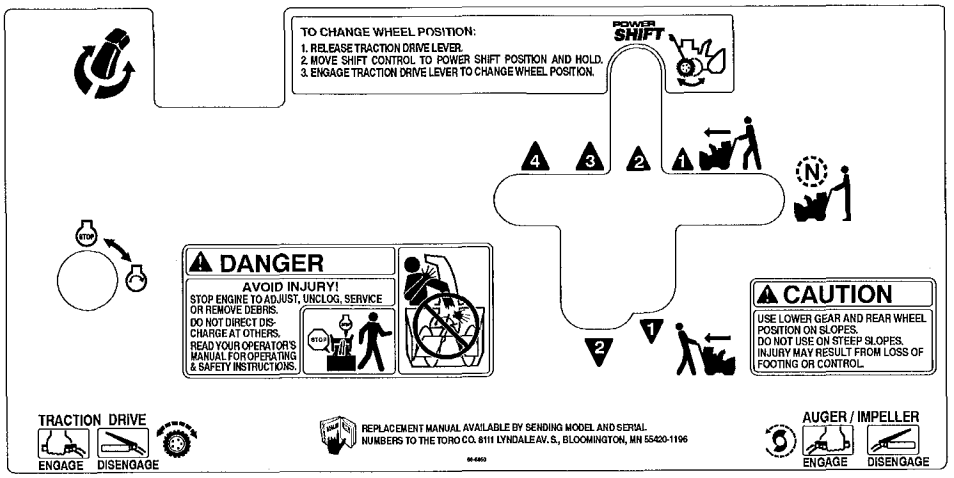

ON CONTROL PANEL
(Part No. 66-6850)



ON LEVER
(Part No. 63-3050)

Loose Parts

Part	Qty	Use
Flange head capscrew — 5/16-18 x 3/4" lg.	6	Mount Auger Housing, page 8
Lower belt cover	1	
Flange head capscrew — 1/4-20 x 1/2" lg.	5	
Cable cover	1	
Shift rod	1	Install Shift Rod, page 8
Locknut—3/8-16	2	
Discharge chute	1	Install Discharge Chute, page 8
Worm gear	1	Install Chute Control Gear, page 8
Gear bracket	1	
Carriage bolt—5/16-18 x 1" lg.	1	
Flat washer	1	
Locknut—5/16	1	
Skid	2	Install Skids, page 9
Flange head capscrew—5/16-18 x 3/4" lg.	2	
Flat washer	2	
Locknut—5/16	2	
Key	1	Use in Ignition Switch
Registration card	2	Use to register product with factory

Specifications and design subject to change without notice.

Accessories

Description	Part Number
110 Vac Electric Starter Kit	37-4810
Tire Chain Kit (for std. axle; not for use with Differential Kit)	63-3040
Snow Cab	68-9500
Weight Kit	74-1190
Drift Breaker	66-7970
Light Kit	66-7941

Assembly

Note: Determine left and right sides of snowthrower by standing in the normal operating position.

Mount Auger Housing

1. Remove (2) flange head capscrews securing idler pulley assembly to engine frame. Remove idler pulley assembly.
2. Align auger housing and engine frame mounting holes (Fig. 2).
3. Route impeller belt around impeller pulley.
4. Secure auger housing to engine frame with (6) 5/16-18x3/4" lg. flange head capscrews.
5. Reinstall idler pulley assembly. Make sure idler pulleys are aligned with belts when reinstalling idler pulley assembly.
6. Tip snowthrower up on front edge of auger housing.
7. Mount lower belt cover to underside of auger housing and engine frame with (2) 1/4-20x1/2" lg. flange head capscrews (Fig. 3). Make sure belt cover mounting tabs are positioned to rear of engine frame member.
8. Check adjustment of impeller cable; refer to step 3 of Adjusting Auger/Impeller Drive Belt, page 16.
9. Mount upper belt cover to engine frame with (3) 1/4-20x1/2" lg. flange head capscrews (Fig. 4).
10. Slide cable cover onto cables and into hole in belt cover (Fig. 4).

Install Shift Rod (Fig. 5)

1. Insert upper shift rod ball joint stud through front of shift bracket and secure with 3/8-16 locknut.

   Note: Shift rod to be positioned with bend rearward.
2. Insert bottom ball joint stud through right side of transmission lever and secure with 3/8-16 locknut.
3. Shift into 2nd gear and check shift rod alignment with Power Shift slot.

   Note: If gear shift lever is not aligned with Power Shift slot in control panel (Fig. 5, inset), shift rod length must be adjusted as follows:

   A. Disconnect ball joint from transmission lever and loosen jam nut.

   B. Rotate ball joint up or down, until gear shift lever is aligned with Power Shift slot.

   C. Reinstall ball joint to transmission lever and tighten jam nut.

Install Discharge Chute (Fig. 6)

Note: Before installing discharge chute, apply a light coat of low temperature grease to chute ring.

1. Set discharge chute—open side forward—onto auger discharge opening, so plastic chute retainers are positioned on chute ring. Make sure chute retainer guide pins are inserted into holes in chute gear.
2. Tighten machine screw and locknut, on left side, until chute retainer plate is positioned against plastic chute retainer and discharge chute is secured to chute ring.
3. Push chute retainers, on right side, toward discharge chute (slotted) and tighten machine screw.
4. Make sure chute rotates freely on ring. If chute binds, move right hand retainer outward to ease operation.

Install Chute Control Gear (Fig. 7)

1. Insert the 5/16-18 x 1" lg. carriage bolt into gear bracket mounting hole.

2. Position worm gear into bracket, align holes and insert chute gear rod through bracket and gear.

3. Loosely mount worm gear and bracket to mounting flange with carriage bolt, flat washer, and locknut.

4. Slide worm gear into teeth of chute gear and tighten locknut.

5. Check operation. Move gear slightly outward if binding is evident.

Check Tire Pressure

IMPORTANT: Check pressure of tires because they are over-inflated at the factory for shipping. Therefore, before the snowthrower is operated, reduce pressure in both tires to 7-15 psi equally.

Install Skids

1. Check tire pressure; refer to Check Tire Pressure, page 9.

2. Move the snowthrower onto a flat surface and check if scraper (Fig. 8) is parallel to the ground. If not, adjust scraper; refer to Adjusting Scraper, page 14.

3. Remove (2) flange bolts and washers securing ends of scraper to side plates (Fig. 9). Reinstall bolts through rear slots in skids. Assemble both skids so that washers are between skids and sideplates (Fig. 9). Do not tighten bolts.

4. Install (2) flange bolts thru front slots in skids and thru sideplates. Install flat washers and locknuts on inside of sideplates. Do not tighten bolts.

   Note: The following steps adjust the skids for paved surfaces. For gravel or crushed rock surfaces, refer to Adjusting Skids, page 15.

5. Manually move wheels to the rear Power Shift position by lifting up on handles and moving the shift control fully forward to Power Shift position (Fig. 10).

6. Support the scraper to be 1/8 inch above a level surface if the snowthrower is to be used on smooth pavement.

   Note: The scraper should be higher than 1/8 inch above the pavement if the pavement surfaces are cracked, rough or uneven.

7. Move the skids down to sit flat on the ground and tighten the (4) flange bolts securing both skids to the auger side plates.

Check Auger Gear Box Oil

1. Move snowthrower to a level surface.

2. Clean area around pipe plug so dirt is removed.

3. Remove pipe plug from gear box (Fig. 11).

4. Check oil level in gear box. Oil must be at point of overflowing in filler opening.

5. If level of oil is low, add GL-5 or GL-6 SAE 85-95 EP transmission oil to the gear box until point of overflow.

   Note: Do not use synthetic gear oil.

6. Reinstall pipe plug in gear box.

Before Starting

Fill Crankcase With Oil

The engine is shipped from the factory without oil in the crankcase. Therefore, before starting the engine, oil must be added to the crankcase.

IMPORTANT: Check level of oil every 5 operating hours or each time unit is used. Initially, change oil after the first 2 hours of

operation; thereafter, under normal conditions, change oil after every 25 hours of operation or annually, whichever comes first.

1. Move unit to a level surface to ensure an accurate oil level reading.
2. Clean area around dipstick to prevent foreign matter from entering filler hole when dipstick is removed.
3. Remove dipstick from crankcase (Fig. 12).
4. Slowly pour SAE 5W-30 or SAE 10 oil into the filler hole, using the filler chart below. The engine uses any high-quality detergent oil having the American Petroleum Institute (API) "service classification"—SE, SF or SG.

   Note: Dipstick must be fully installed to ensure accurate gauging of oil level. DO NOT OVERFILL.

OIL FILL CHART

1232 Snowthrower	24 ounces of oil

Fill Fuel Tank With Gasoline

⚠ DANGER

POTENTIAL HAZARD
- **In certain conditions gasoline is extremely flammable and highly explosive.**

WHAT CAN HAPPEN
- **A fire or explosion from gasoline can burn you, others, and cause property damage.**

HOW TO AVOID THE HAZARD
- **Use a funnel and fill the fuel tank outdoors, in an open area, when the engine is cold. Wipe up any gasoline that spills.**
- **Do not fill the fuel tank completely full. Add gasoline to the fuel tank until the level is 1/4" to 1/2" (6 mm to 13 mm) below the bottom of the filler neck. This empty space in the tank allows gasoline to expand.**
- **Never smoke when handling gasoline, and stay away from an open flame or where gasoline fumes may be ignited by a spark.**
- **Store gasoline in an approved container and keep it out of the reach of children.**
- **Never buy more than a 30-day supply of gasoline.**

Use clean, fresh lead-free gasoline, including *oxygenated* or *reformulated* gasoline, with an octane rating of 85 or higher. To ensure freshness, purchase only the quantity of gasoline that can be used in 30 days. Use of lead-free gasoline results in fewer combustion chamber deposits and longer spark plug life. Use of premium grade fuel is not necessary or recommended.

IMPORTANT: NEVER USE METHANOL, GASOLINE CONTAINING METHANOL, GASOHOL CONTAINING MORE THAN 10% ETHANOL, PREMIUM GASOLINE, OR WHITE GAS BECAUSE ENGINE FUEL SYSTEM DAMAGE COULD RESULT.

Toro also recommends that Toro Stabilizer/Conditioner be used regularly in all Toro gasoline powered products during operation and

storage seasons. Toro Stabilizer/Conditioner cleans the engine during operation and prevents gum-like varnish deposits from forming in the engine during periods of storage.

DO NOT USE FUEL ADDITIVES OTHER THAN THOSE MANUFACTURED FOR FUEL STABILIZATION DURING STORAGE SUCH AS TORO'S STABILIZER/CONDITIONER OR A SIMILAR PRODUCT. TORO'S STABILIZER/CONDITIONER IS A PETROLEUM DISTILLATE BASED CONDITIONER/STABILIZER. TORO DOES NOT RECOMMEND STABILIZERS WITH AN ALCOHOL BASE SUCH AS ETHANOL, METHANOL OR ISOPROPYL. ADDITIVES SHOULD NOT BE USED TO TRY TO ENHANCE THE POWER OR PERFORMANCE OF MACHINE.

1. Clean area around the fuel tank cap (Fig. 12). Remove cap from fuel tank. Using unleaded, regular gasoline, fill tank to within 1/4" to 1/2" (6 to 13 mm) from the top of the tank, not into the filler neck. This space is for expansion of fuel. Do not fill tank full. Reinstall fuel tank cap.

   Fuel tank capacity is 4 quarts.

Operation

Controls

Auger/Impeller Control (Fig. 13)—Control has two positions: ENGAGE and DISENGAGE. To engage both auger and impeller, compress lever against right handle grip. To disengage, release lever.

Traction Drive Control (Fig. 13)—To engage traction (wheel drive) or activate power shift system, lever must be compressed against left handle grip. To stop traction, release lever.

Speed Shift Control (Fig. 13)—The control has a neutral position, four speeds forward and two reverse, and also controls power shifting of wheels. To select speeds, move shift control to desired position.

Note: Before shifting gears into or out of reverse or when using the Power Shift feature, the traction drive control must be released. On-the-go shifting may be accomplished between any of the **FORWARD** speeds without releasing the traction drive control.

Auger Lock-Up (Fig. 13)—When the auger/impeller control and traction drive control are both compressed, the traction control locks the auger/impeller control down. Releasing the traction control releases the auger/impeller control.

Discharge Chute Control (Fig. 13)—Rotate discharge chute control clockwise to move discharge chute to the right and counterclockwise to move chute to the left.

Ignition Switch (Fig. 13)—Switch has two positions: ON and OFF. Rotate key to ON position before starting engine. To stop engine, rotate key to OFF.

Throttle (Fig. 14)—Move throttle upward to increase the engine speed.

Choke (Fig. 14)—Rotate choke to ON position to start a cold engine. As engine warms up, rotate choke gradually to OFF.

Primer (Fig. 14)—Press primer to pump a small amount of gasoline into engine for improved cold weather starting.

Fuel Shut-Off Valve (Fig. 15)—Valve is located under fuel tank. Close valve to stop fuel flow from fuel tank and open valve to allow fuel to flow to the carburetor. Close valve when snowthrower is not used.

Deflector Handle (Fig. 16)—Deflector handle on top of discharge chute is used to control the height of the snow stream.

Recoil Starter (Fig. 17)—Recoil starter is on back side of engine. Pull recoil starter to start engine.

Starting/Stopping Engine

Starting

Note: If engine is operated when temperature is +40°F (4°C) or higher, remove carburetor heater box. However, the heater box (Fig. 18) must be reinstalled when temperature falls below +40°F (4°C). To remove heater box:

A. Remove (2) Phillips screws and (3) hex head screws securing heater box in place (Fig. 18 & 19). Grasp choke knob and pull it off mounting pin (Fig. 18).

B. Lift heater box up and away from the engine, and reinstall choke knob on mounting pin.

IMPORTANT: Check auger and impeller to ensure that both parts are not frozen, but free to rotate. Also, make sure discharge chute is not obstructed. USE A STICK, NOT YOUR HAND, TO REMOVE ANY OBSTRUCTIONS.

1. Move speed shift control to N (neutral) and throttle to FAST (Fig. 13).

2. Ensure that auger/impeller control and traction drive control are in disengaged position.

3. Open fuel shut-off valve below fuel tank (Fig. 15).

4. Move choke to ON choke position (Fig. 14).

5. Rotate ignition key to ON (Fig. 13).

6. Cover hole in center of primer with thumb and push primer three times slowly. **DO NOT PRIME IF THE ENGINE HAS BEEN RUNNING AND IS HOT.**

   Note: Excessive priming may cause flooding of engine and failure to start.

7. Grasp recoil starter handle (Fig. 17) and pull it out slowly until positive engagement results; then pull vigorously to start the engine. Keep firm grip on starter handle and return the rope slowly.

   Note: If engine does not start or if temperature is -10° F or below, additional priming may be required. After each additional prime, try to start the engine before priming again.

8. After engine starts, immediately move choke (Fig. 14) to 3/4 position. As engine warms up, move choke to 1/2 position; then to OFF position. If engine falters, return choke to 1/2 position. When engine warms sufficiently, move choke to OFF position.

Before Stopping

1. Engage auger to clear any remaining snow from inside the housing.

2. Run engine for a few minutes to help dry off any moisture which may have accumulated on engine.

3. With engine running, pull recoil starter with a rapid, continuous full arm stroke three or four times. This helps prevent possible freeze-up of recoil starter due to extreme snow blowing conditions.

   Note: Pulling of recoil starter rope produces a loud, clattering sound. This is not harmful to the engine or the starter.

Stopping

1. Release traction and auger/impeller drive controls (Fig. 13).

2. Move throttle to slow and rotate ignition key to OFF.

3. Wait for all moving parts to stop before leaving the operator's position (behind the handles).

Power Shift Operation

Wheels will shift forward (or rearward) with every other movement of the shift control.

Move wheels to the rear Power Shift position in heavy and/or drifted snow.

Leave wheels in the front position for light snow or for transporting snowthrower.

1. Release traction drive lever.

2. To move wheels to front or rear position, move shift control fully forward to Power Shift position and hold (Fig. 20).

3. Fully engage traction drive lever to move wheels into alternate position (Figs. 20 & 21).

   Note: When power shifting it may be necessary to slightly raise handle to assist wheel movement.

   Note: To shift wheels manually if engine is not running, follow steps 1 and 2 and then lift up on handles to unlock wheels.

   Note: If wheels do not move in desired direction when power shifting, repeat procedure.

Free Wheeling Or Self-propelled Drive

The snowthrower can be free wheeled or engaged for self-propelled operation. There are two holes in each end of the axle. When axle pins are thru outer axle holes and not thru wheel hub (Fig. 22), snowthrower free wheels. By contrast, when both pins are installed thru holes in wheel hub and inner hole of axle (Fig. 22), snowthrower propels itself.

Differential Operation

For maximum maneuverability during normal snow removal, keep differential in unlocked position. When additional traction is needed, shift differential to lock position.

⚠ CAUTION

- **Make sure snowthrower is not on a steep slope or incline when performing this procedure.**

1. Move wheels to rear position (Fig. 23).

2. Shift transmission to neutral (Fig. 23).

3. Push lightly on release tab of lock spring to disengage from shaft groove and slide coupling to desired position (Fig. 23).

   Note: When sliding coupling from unlock to lock position, it may be necessary to swivel unit slightly to allow coupling to clear differential body bolt heads.

Lock position — Coupling lock spring in left hand shaft groove (Fig. 24).

Unlock position — Coupling lock spring in right hand shaft groove (Fig. 24).

Operating Tips

1. When snowthrower is not being used, close fuel shut-off valve and remove key from the switch.

2. Remove snow as soon as possible after it falls. This produces best snow removal results.

3. When in the rear Power Shift position, push down on handles to increase traction if necessary.

4. Discharge snow downwind whenever possible, and overlap each swath to ensure complete snow removal. If wheels slip, shift into a lower gear to reduce forward speed.

5. In some snow and cold weather conditions, some controls and moving parts may freeze. Therefore, when any control becomes hard to operate, stop the engine and wait for all moving parts to stop; then check all parts for freeze up. DO NOT USE EXCESSIVE FORCE AND TRY TO OPERATE THE CONTROLS WHEN FROZEN. Free all controls and moving parts before operating.

6. Adjust skids to match the type of surface being cleaned. Refer to Adjusting Skids, page 15.

7. Run snowthrower for a few minutes after clearing snow so moving parts do not freeze. Engage auger to clear any remaining snow from inside housing.

8. Do not overload snowthrower by clearing snow at too fast a rate. If engine slows down, shift to a lower gear to reduce forward speed.

9. Move wheels to the rear Power Shift position and shift to a lower gear in heavy and/or drifted snow to prevent the auger housing from riding up over the snow.

10. Always use full throttle (maximum engine speed) when throwing snow.

11. In wet or slushy conditions, clogging of the discharge chute will be reduced by maintaining maximum engine speed and by not overloading the engine.

⚠ DANGER

POTENTIAL HAZARD

- **When snowthrower is in operation, impeller and auger can be rotating.**

WHAT CAN HAPPEN

- **ROTATING IMPELLER OR AUGER CAN CUT OFF OR INJURE FINGERS OR HANDS.**

HOW TO AVOID THE HAZARD

- **Stay behind the handles and away from discharge opening while operating the snowthrower.**
- **Keep face, hands, feet and any other part of your body or clothing away from concealed, moving or rotating parts.**
- **Before adjusting, cleaning, repairing and inspecting the snowthrower, and before unclogging the discharge chute, SHUT ENGINE OFF AND WAIT FOR ALL MOVING PARTS TO STOP.**
- **Also, pull wire off spark plug and keep wire away from the plug to prevent accidental starting.**
- **Use a stick, not your hands, to remove obstructions from discharge chute.**

Adjusting Scraper (Fig. 8)

Adjust the scraper to compensate for wear and to ensure that the auger does not contact the pavement.

1. Pull wire off spark plug and make sure wire does not contact plug accidentally.
2. Check the tire pressure in both tires. Make sure that they are both inflated equally between 7 and 15 psi.
3. Move the snowthrower onto a flat surface and shift the wheels to the FRONT position.
4. Loosen the (4) flange bolts securing both skids to the auger side plates.
5. Next, loosen the carriage bolts securing the scraper to the auger housing.
6. Support the auger blades so that the auger is 1/8 - 1/4 inch off the ground.

7. Move the scraper so that it contacts the flat surface all the way across, then tighten the two rear flanged cap screws securing scraper and skids to the side plates. This temporarily locks the scraper in the proper position so that the remainder of the fasteners can be tightened without affecting adjustment.

8. Secure the scraper using carriage bolts and nylon locknuts.

9. Adjust the skids; refer to Adjusting Skids, page 15.

Adjusting Skids (Fig. 9)

For Concrete or Asphalt Surfaces

If the snowthrower is not cleaning up the snow close enough to the pavement, adjust the skids to lower the scraper.

If the scraper catches on cracks in the pavement, adjust the skids to raise the scraper.

1. Pull wire off spark plug and make sure wire does not contact plug accidentally.

2. Loosen the (4) flange bolts securing both skids to the auger side plates.

3. Check scraper adjustment to ensure that the auger does not contact the pavement; refer to Adjusting Scraper, page 14.

4. Move the wheels to the REAR Power Shift position.

5. Support the scraper to be 1/8 inch above a level surface if the snowthrower is to be used on smooth pavement.

   Note: The scraper should be higher than 3/16 inch above the pavement if the pavement surfaces are cracked, rough or uneven.

6. Move the skids down to sit flat on the ground and tighten the (4) flange bolts securing both skids to the auger side plates.

For Gravel Surfaces

For gravel or crushed rock surfaces, adjust the skids to prevent picking up rocks.

1. Pull wire off spark plug and make sure wire does not contact plug accidentally.

2. Loosen the (4) flange bolts securing both skids to auger side plates. Next, slide skids down as far as possible so auger will be supported as far from the level surface as skid adjustment allows: then tighten flange bolts.

Maintenance

⚠ WARNING

POTENTIAL HAZARD
- **If you leave the wire on the spark plug, someone could start the engine.**

WHAT CAN HAPPEN
- **Accidental starting of engine could seriously injure you or other bystanders.**

HOW TO AVOID THE HAZARD
- **Pull wire off spark plug and remove key from switch before you do any maintenance. Also push wire aside so it does not accidentally contact spark plug.**

Draining Gasoline

1. Close fuel shut-off valve located under fuel tank (Fig. 15).

⚠ WARNING

POTENTIAL HAZARD
- **Gasoline is highly flammable.**

WHAT CAN HAPPEN
- **Gasoline can be ignited and cause serious personal injury.**

HOW TO AVOID THE HAZARD
- **Drain gasoline outdoors.**
- **Drain gasoline from a cold engine only.**
- **Wipe up any gasoline that may have spilled.**
- **Do not drain gasoline near any open flame or where gasoline fumes may be ignited by a spark.**
- **DO NOT SMOKE a cigar, cigarette or pipe when handling gasoline.**

2. Place a clean drain pan under shut-off valve.
3. Loosen hose clamps securing fuel line to valve and slide line off valve (Fig. 15).
4. Open valve allowing fuel to flow into drain pan.
5. Reinstall fuel line and secure with hose clamp.

Lubricating Snowthrower

1. Annually lubricate drive chain with chain lubricant (Fig. 25). Wipe up any excess oil.

Changing Crankcase Oil

Initially, change oil after the first 2 hours of engine operation; thereafter, change oil after every 25 hours of engine operation or annually. If possible, run engine just before changing oil because warm oil flows better and carries more contaminants than cold oil.

1. Pull wire off spark plug and make sure wire does not contact plug accidentally.
2. Clean area around oil drain cap. Next, slide oil drain pan below drain extension; then remove oil drain cap (Fig. 26).
3. After all oil is drained, reinstall oil drain cap securely.
4. Position snowthrower on a level surface. Next, fill crankcase with oil: see Fill Crankcase With Oil, page 9. Wipe up any oil that may have spilled.

Auger Gear Box Oil

The auger gear box oil level must be checked at setup, after every 10 hours of use, and upon removal from annual storage. To check the auger gear box oil level:

1. Position snowthrower on a level surface.
2. Clean area around pipe plug so dirt is removed.
3. Remove pipe plug from gear box (Fig. 11).
4. Check level of oil in gear box. Oil must be at point of overflowing in filler opening.
5. If level of oil is low, add GL-5 or GL-6 SAE 85-95 EP transmission oil to the gear box until point of overflow.

   Note: Do not use synthetic gear oil.
6. Reinstall pipe plug in gear box.

Adjusting Auger/Impeller Drive Belt

If auger/impeller belt slips, resulting in decreased snowthrowing performance, an adjustment is required. **WHENEVER A NEW BELT IS INSTALLED, AN ADJUSTMENT IS REQUIRED. USE ONLY GENUINE TORO REPLACEMENT PARTS.**

1. Pull wire off spark plug and make sure wire does not contact plug accidentally.

2. Remove (3) flange head capscrews securing belt cover to engine frame and slide belt cover up cables (Fig. 4).

3. Depress the auger/impeller control lever on the right hand grip. Hold the lever and insert a .010" (.25 mm) feeler gauge between a coil in the center of the spring (Fig. 27). Adjust the cable to achieve .010" (.25 mm) gap between the coils.

4. Loosen upper jam nut securing auger/impeller cable to mounting bracket (Fig. 28).

5. Rotate bottom jam nut upward to increase belt tension.

6. Tighten upper jam nut against bracket.

7. Recheck idler adjustment: refer to step 3.

8. Check impeller brake arm clearance by releasing the auger/impeller lever. With the lever released, there should be more than 1/8" clearance between tab on impeller idler arm and brake arm (Fig. 29). **If there is less than 1/8" clearance, belt must be replaced.**

⚠ DANGER

POTENTIAL HAZARD
- **Improper adjustment may cause injury if auger/impeller turns when disengaged.**

WHAT CAN HAPPEN
- **Rotating impeller or auger can cut off or injure fingers or hands.**

HOW TO AVOID THE HAZARD
- **Keep face, hands, feet and any other part of your body or clothing away from concealed, moving or rotating parts.**
- **Make certain that impeller brake arm clearance is maintained.**
- **Do not adjust the auger/impeller drive belt too tight because it may cause the auger/impeller to turn when the control lever is in the disengaged position. If this occurs, decrease belt tension.**

9. Reinstall belt cover and cable cover.

10. Check tension of belt by operating the auger. **If belt still slips, replace the belt.**

Adjusting Traction Drive Belt (Fig. 28)

If the wheels do not turn when the traction lever is depressed, the traction belt tension should be increased. **Whenever the belt is replaced, an adjustment is required.**

1. Loosen upper jam nut securing traction cable to mounting bracket.

2. Rotate bottom jam nut upward to increase belt tension.

   Note: When adjusting cable, always rotate nut one full turn at a time.

3. Tighten upper jam nut against bracket.

4. Check tension of belt by operating machine. Machine should begin to move forward when traction lever is depressed approximately halfway down toward handle grip. Turn engine off and repeat steps until proper adjustment is achieved.

   IMPORTANT: Do not adjust the belt too tight because it may cause snowthrower to creep when traction lever is in disengaged position. If this occurs, decrease belt tension.

Replacing Drive Belts (Fig. 30)

If auger/impeller belt or traction belt becomes worn, glazed, stretched, oil-soaked or otherwise defective, belt replacement is required.

1. Pull wire off spark plug and make sure it does not contact the plug accidentally.

2. Remove (3) flange head capscrews holding belt cover in place, and slide belt cover up cables (Fig. 4).

3. Move speed shift control to N (neutral).
4. Remove (2) flange head capscrews securing idler pulley assembly to engine frame. Remove idler pulley assembly.
5. Remove capscrew and lockwasher securing half sheave to front of pulley assembly.
6. Slide half sheave and auger/impeller belt off crankshaft and remove belt from impeller pulley.
7. If replacing traction belt, slide middle pulley section and belt off crankshaft and remove belt from transmission pulley.
8. On control cable which corresponds to belt being replaced, loosen jam nuts securing cable to bracket (Fig. 28). Cable must be free to slide in bracket when changing belt(s).
9. Reinstall belts by reversing procedure. **Make sure tabs in half sheave are inserted into mounting grooves in middle pulley section when reinstalling.**

   Note: Make sure idler pulleys are aligned with belts when reinstalling idler pulley assembly.
10. Readjust belts, refer to Adjusting Auger/Impeller Drive Belt or Adjusting Traction Drive Belt.

⚠ DANGER

POTENTIAL HAZARD
- **Improper adjustment may cause injury if auger/impeller turns when disengaged.**

WHAT CAN HAPPEN
- **Rotating impeller or auger can cut off or injure fingers or hands.**

HOW TO AVOID THE HAZARD
- **Keep face, hands, feet and any other part of your body or clothing away from concealed, moving or rotating parts.**
- **Make certain that impeller brake arm clearance is maintained.**
- **Do not adjust the auger/impeller drive belt too tight because it may cause the auger/impeller to turn when the control lever is in the disengaged position. If this occurs, decrease belt tension.**

Adjusting Drive Chain (Fig. 31-33)

The drive chain must be adjusted to maintain 1/8-3/8 of an inch deflection mid span between transmission and axle sprocket. Check chain deflection after every 25 hours of operation.

1. Pull wire off spark plug and make sure wire does not contact plug accidentally (Fig. 35).
2. Make sure wheels are positioned in rear position, **move shift control into 2nd gear**, and tip snowthrower up onto front edge of auger housing.

   IMPORTANT: To adjust drive chain, the snowthrower must be tipped up on front edge of auger housing. However, before the snowthrower is tipped, drain all gasoline from fuel tank. Refer to Draining Gasoline, page 15.
3. Check deflection of chain by lifting up on chain with moderate pressure at mid span. There should be 1/8-3/8" deflection (Fig. 31). If deflection is not as specified, an adjustment is required.
4. Loosen (4) flange head capscrews (2 each side) securing transmission frame to engine frame (Fig. 33).
5. Pivot rear of transmission frame until 1/8-3/8" chain deflection is attained. Retighten flange head capscrews.
6. Recheck chain deflection.

   IMPORTANT: Excessive chain tension may cause transmission damage.

7. Chain adjustment will affect gearshift lever alignment. If gear shift lever is not aligned with Power Shift slot in control panel (Fig. 5, inset), shift rod length must be adjusted as follows:

   A. Disconnect ball joint from transmission lever and loosen jam nut.

   B. Rotate ball joint up or down until gear shift lever is aligned with Power Shift slot.

   C. Reinstall ball joint to transmission lever and tighten jam nut.

Adjusting Carburetor

The carburetor has been adjusted at the factory, but an occasional adjustment may be required.

1. Remove carburetor heater box: see Starting, paragraph one, steps A & B, page 12.

   Note: Skip steps 2 and 3 if the engine will start and run.

2. Power Adjusting Screw (Fig. 34)—Close screw by gently rotating it clockwise until a slight seating resistance is felt. Next, rotate power adjusting screw 1 full turn—360°—counterclockwise.

   IMPORTANT: Do not close power adjusting screw or idle mixture screw too tight because the screw and seat will likely be damaged.

3. Idle Mixture Screw (Fig. 34)—Close screw by gently rotating it clockwise until a slight seating resistance is felt. Next, rotate idle mixture screw 1-1/2 full turns counterclockwise.

4. Start engine and let it warm up for approximately 3 to 5 minutes; then move throttle to FAST.

⚠ WARNING

POTENTIAL HAZARD
- **Engine must be running so final adjustment of the carburetor can be performed.**

WHAT CAN HAPPEN
- **Personal injury is possible.**

HOW TO AVOID THE HAZARD
- **Move auger drive and traction drive controls to DISENGAGE.**
- **Remember to keep hands, feet, face, and other parts of your body or clothing away from muffler, auger, discharge chute, and any moving part(s).**

⚠ WARNING

POTENTIAL HAZARD
- **Engine exhaust contains carbon monoxide.**

WHAT CAN HAPPEN
- **Carbon monoxide is an odorless, deadly poison.**

HOW TO AVOID THE HAZARD
- **Do not run engine indoors or in an enclosed area.**

5. Rotate power adjusting screw (Fig. 34) clockwise-in 1/8-turn at a time until engine misses because of a lean gasoline mixture. Then rotate screw counterclockwise-out 1/8-turn at time until engine runs unevenly because of a rich gasoline mixture. Next, rotate power adjusting screw clockwise, back to the midpoint between the rich and lean setting, so engine runs smoothly.

   Note: Wait several seconds between each 1/8-turn setting so engine can adjust to the new fuel mixture.

6. Move throttle to idle speed. Next, rotate idle speed screw until engine idles fast—1750 rpm.

7. Rotate idle mixture screw (Fig. 34) clockwise-in 1/8-turn at a time until engine begins to miss because of a lean mixture. Then rotate screw

counterclockwise-out 1/8-turn at a time until engine runs unevenly because of rich mixture. Next, rotate idle mixture screw clockwise, back to the mid-point between rich and lean settings.

Note: Wait several seconds between each 1/8-turn setting so engine can adjust to the new fuel mixture.

8. Again, rotate idle speed screw (Fig. 34) until engine idles at 1750 rpm.

9. Check carburetor adjustment by quickly moving throttle from low speed to high speed. Engine should accelerate without hesitation or sputtering. If engine does not accelerate properly, adjust carburetor to a slightly richer mixture. Also, if engine falters under load, open power adjusting screw 1/8 turn counterclockwise.

10. After carburetor is adjusted, shut engine off before replacing carburetor heater box.

Replacing Spark Plug

Use a Champion RJ-19LM spark plug or equivalent. Set air gap at 0.030" (0.76 mm). Since air gap between center and side electrodes of the spark plug increases gradually during normal engine operation, install a new plug after every 25 hours of engine operation.

1. Clean area around spark plug so foreign matter cannot fall into cylinder when plug is removed.

2. Pull wire off spark plug (Fig. 35) and remove plug from cylinder head.

   IMPORTANT: A cracked, fouled or dirty spark plug must be replaced. Do not sand blast, scrape or clean electrodes because grit may eventually release from the plug and fall into the cylinder. The result will likely be engine damage.

3. Set air gap between electrodes of new spark plug at 0.030" (0.76 mm) (Fig. 36). Next, install spark plug in cylinder head. Tighten plug to 15 ft-lb (20.4 N·m).

4. Push the wire onto the spark plug.

Storage

1. FUEL SYSTEM PREPARATION–

- Add Toro Stabilizer/Conditioner to the fuel tank (one ounce per gallon of fuel).
- Run engine for five minutes to distribute conditioned fuel through fuel system.
- Stop engine, allow it to cool, and drain fuel tank or run engine until it stops.
- Restart the engine again and run it until it stops.
- Either choke or prime the engine, restart it a third time and run engine until it will not restart.
- Dispose of fuel properly. Recycle per local codes.
- **DO NOT store STABILIZED gasoline over 90 days.**

2. Remove spark plug from cylinder head. Next, pour two teaspoons of engine oil into spark plug hole in cylinder head. Install spark plug in cylinder head, but do not install wire on the plug. Then pull recoil starter slowly to distribute oil on inside of cylinder.

3. Lubricate the snowthrower: refer to Lubricating Snowthrower, page 16. Change crankcase oil: see Changing Crankcase Oil, page 16.

4. Clean the snowthrower. Touch up chipped surfaces with paint. Toro Re-Kote paint is available from an Authorized TORO Service Dealer. Sand affected areas before painting, and use a rust preventative to prevent metal parts from rusting.

5. Tighten all screws and nuts. If any part is damaged, repair or replace it.

6. Store snowthrower in a clean, dry place, and cover it for protection.

TORO

Gas Powered Consumer Products Except WPM

THE TORO TOTAL COVERAGE GUARANTEE

A Full Two-Year Warranty
(Limited Warranty for Commercial Use)

What Is Covered By This Express Warranty?

The Toro Company promises to repair any TORO Product used for normal residential purposes* if defective in materials or workmanship for a period of two years from the date of purchase. The cost of parts and labor is included, but the customer pays the transportation costs.

Transportation within a 15 mile radius of the servicing dealer is covered under this warranty for two–stage snowthrowers, walk behind debris equipment and all TORO Wheel Horse riding products. Single stage snowthrowers, and other products not specifically covered, are excluded from the transportation coverage provided by this warranty.

What Products Are Covered By This Warranty?

This warranty applies to all gasoline powered consumer products except walk power mowers. ProLine riding products, wide area walk behind mowers and 18" and 21" mowers are covered by separate warranty statements.

How About Commercial Use?

TORO Consumer Products used for commercial, institutional or rental use are covered by a limited warranty for the following time periods from the date of purchase:

Products	Warranty Period
• 300, 400 and 500 Series Lawn and Garden Tractors	
Chassis	1 year limited warranty
Engine	2 year limited warranty
• 260 Series Lawn and Garden Tractors, XL Lawn Tractors, Rear Engine Riders, Straight Shaft Trimmers, and Backpack Blowers	90 day limited warranty
• All Others	45 day limited warranty

How Do You Get Warranty Service?

Should you feel your TORO Product contains a defect in material or workmanship, contact the dealer who sold you the product or any Authorized TORO Service Dealer or TORO Master Service Dealer. The Yellow Pages of your telephone directory is a good reference source. The dealer will either arrange service at his/her dealership or recommend another Authorized Service Dealer who may be more convenient. You may need proof of purchase (copy of registration card, sales receipt, etc.) for warranty validation.

If for any reason you are dissatisfied with the Service Dealer's analysis of the defect in materials or workmanship or if you need a referral to a TORO Service Dealer, please feel free to contact us at the following address:

Toro Customer Service Department
8111 Lyndale Avenue South
Bloomington, MN 55420–1196
612–888–8801
800–348–2424

What Must You Do To Keep The Warranty In Effect?

You must maintain your TORO Product by following the maintenance procedures described in the operator's manual. Such routine maintenance, whether performed by a dealer or by you, is at your expense.

What Does This Warranty Not Cover? and How Does Your State Law Relate To This Warranty?

There is no other express warranty except the TORO Starting Guarantee on GTS Engines. This express warranty does not cover:

- Cost of regular maintenance service or parts, such as filters, fuel, lubricants, tune–up parts, blade sharpening, brake and clutch adjustments.
- Any product or part which has been altered or misused or required replacement or repair due to normal wear, accidents, or lack of proper maintenance.
- Repairs necessary due to improper fuel, contaminants in the fuel system, or failure to properly prepare the fuel system prior to any period of non–use over three months.
- Pickup and delivery charges for distances beyond a 15 mile radius from an Authorized TORO Service Dealer (covered products only).

All repairs covered by this warranty must be performed by an Authorized TORO Service Dealer using Toro approved replacement parts.

Repair by an Authorized TORO Service Dealer is your sole remedy under this warranty.

The Toro Company is not liable for indirect, incidental or consequential damages in connection with the use of the TORO Products covered by this warranty, including any cost or expense of providing substitute equipment or service during reasonable periods of malfunction or non–use pending completion of repairs under this warranty. Some states do not allow exclusions of incidental or consequential damages, so the above exclusion may not apply to you.

This warranty gives you specific legal rights, and you may also have other rights which vary from state to state.

* Normal residential purposes means mowing the lawn on the same lot as your home. Use at more than one location is considered commercial use and the commercial use warranty would apply.

COUNTRIES OTHER THAN THE UNITED STATES OR CANADA

Customers who have purchased TORO Products exported from the United States or Canada should contact their TORO Distributor (Dealer) to obtain guarantee policies for your country, province, or state. If for any reason you are dissatisfied with your Distributor's service or have difficulty obtaining guarantee information, contact the TORO importer. If all other remedies fail, you may contact us at The Toro Company.