FORM NO. 3318–555

TORO®

CCR™ 3000 GTS®

Snowthrower

Model No. 38430–7900001 & Up
Model No. 38435–7900001 & Up

Operator's Manual

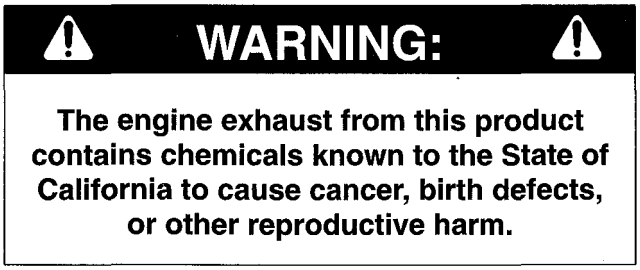
WARNING:
The engine exhaust from this product contains chemicals known to the State of California to cause cancer, birth defects, or other reproductive harm.

Figures

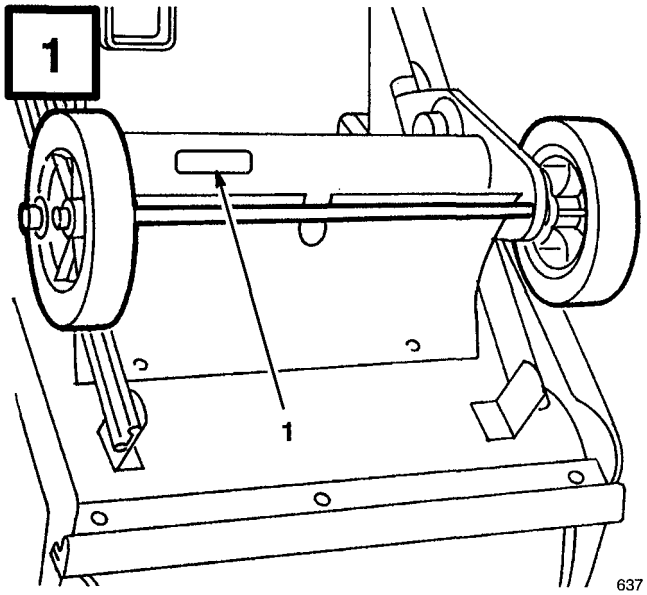

1. Model and serial number decal

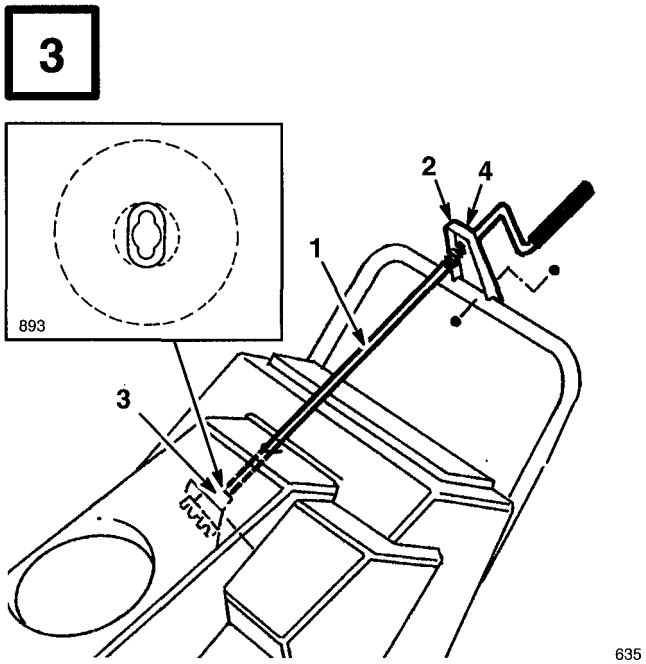

1. Chute crank
2. Mounting bracket
3. Gear
4. Plastic bushing

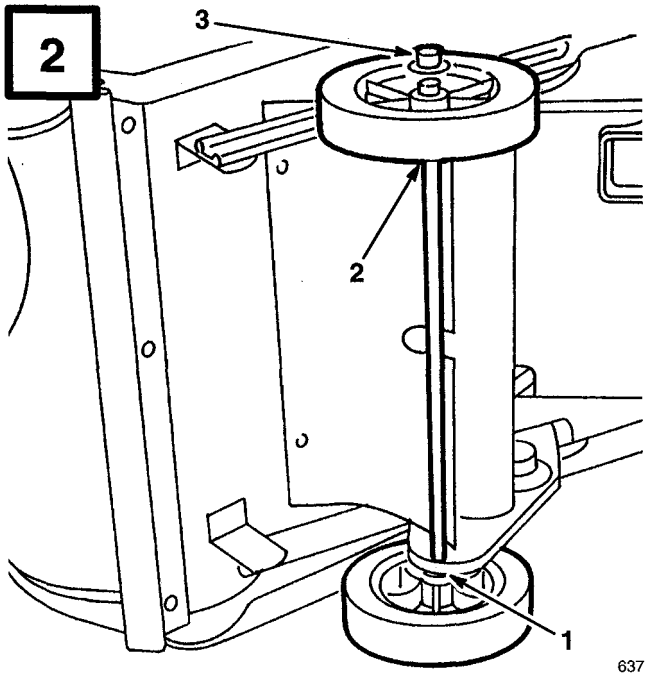

(Unit shown on right side)

1. Short spacer
2. Long spacer
3. Pushnut

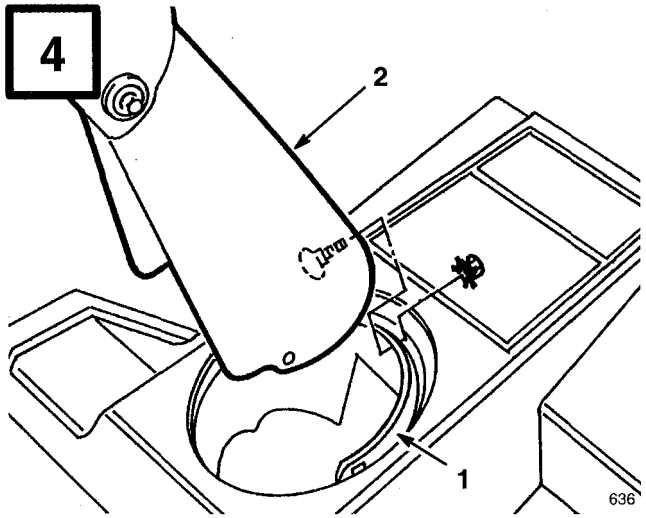

1. Chute ring
2. Discharge chute

©The Toro Company – 1996
All Rights Reserved

Printed in USA

5

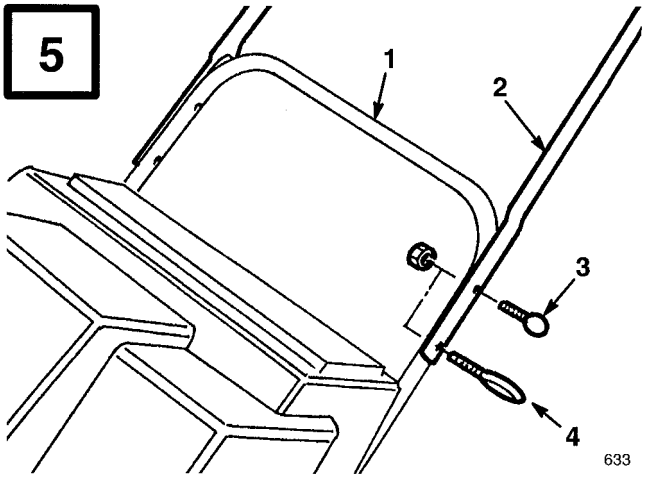

1. Lower handle
2. Upper handle
3. Handle bolt
4. Eyebolt

6

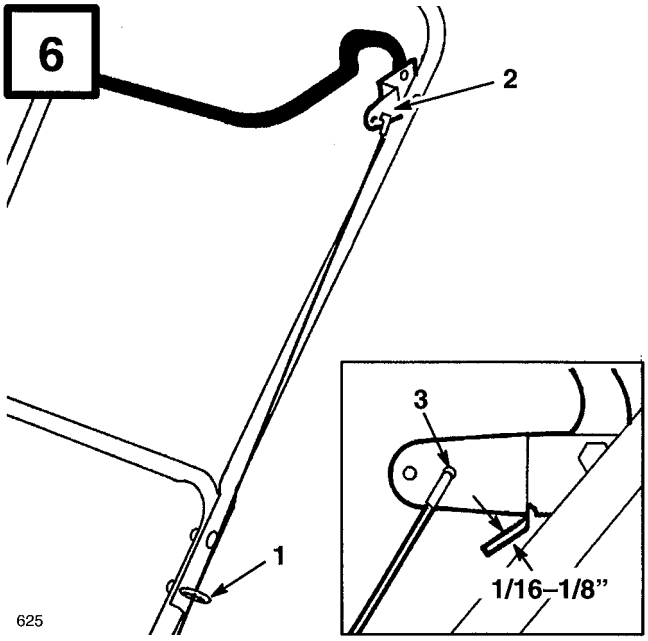

1. Eyebolt
2. Control bar bracket
3. Rear hole

7

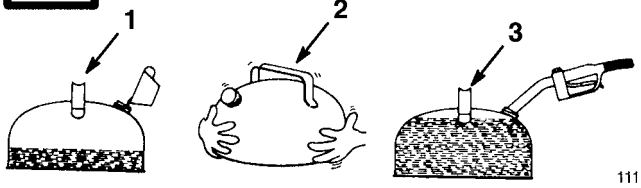

1. Add oil to small amount of gasoline
2. Install cap and shake can to mix
3. Add remaining amount of gasoline

8

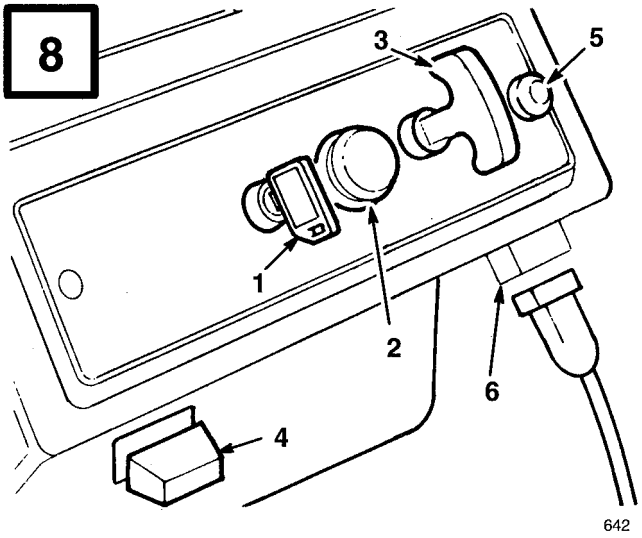

1. Key switch
2. Primer
3. Recoil start
4. Choke
5. Elec. start button*
6. Cord connection*

* ELEC. START MODEL

9

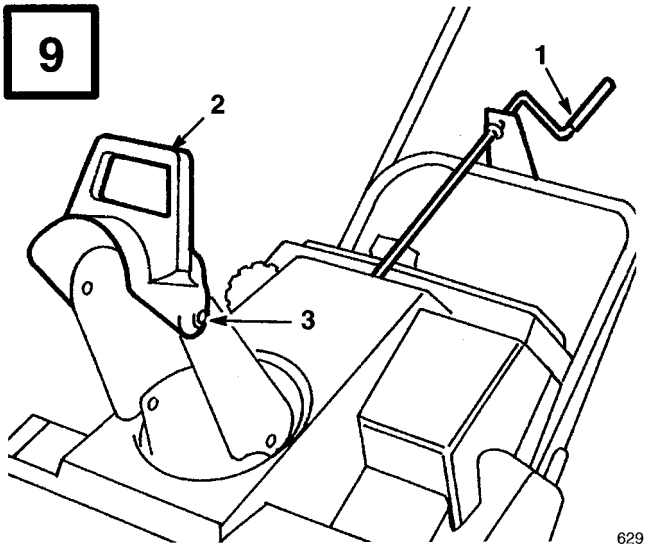

1. Chute crank
2. Chute deflector handle
3. Deflector mounting nuts

10

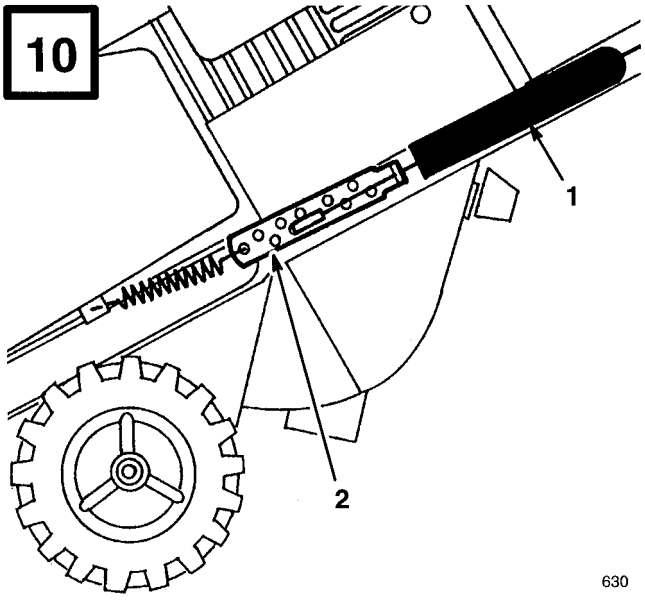

1. Spring cover
2. Cable adjuster

11

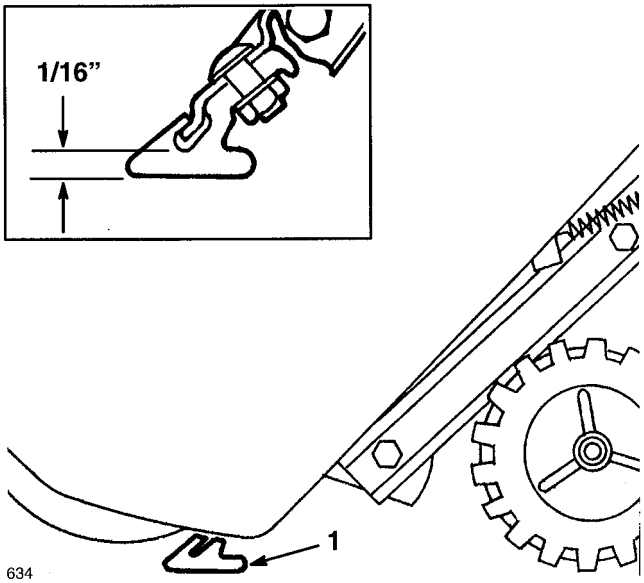

1. Scraper

12

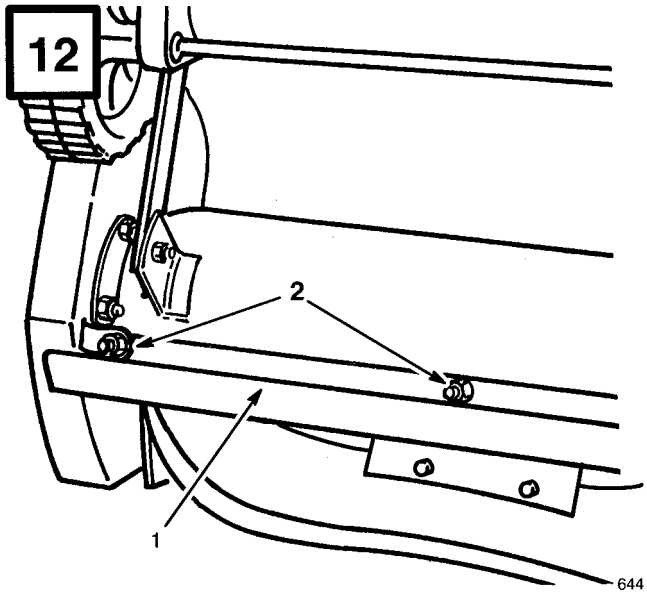

1. Scraper
2. Carriage bolts & locknuts

13

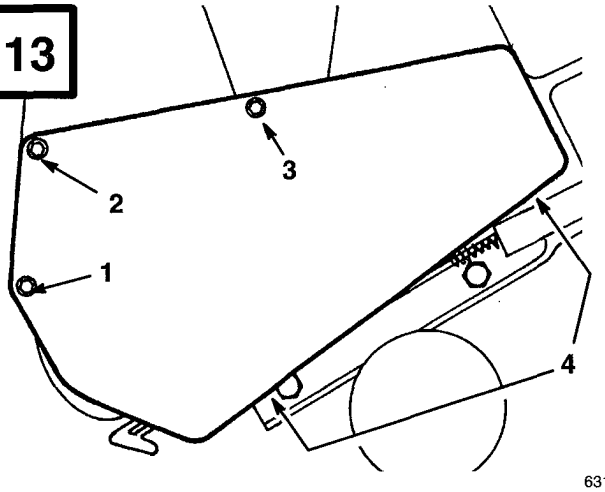

631

1. Cap screw, nut
2. Capscrew, nut, washer
3. Long self tapping screw
4. Short self tapping screws

14

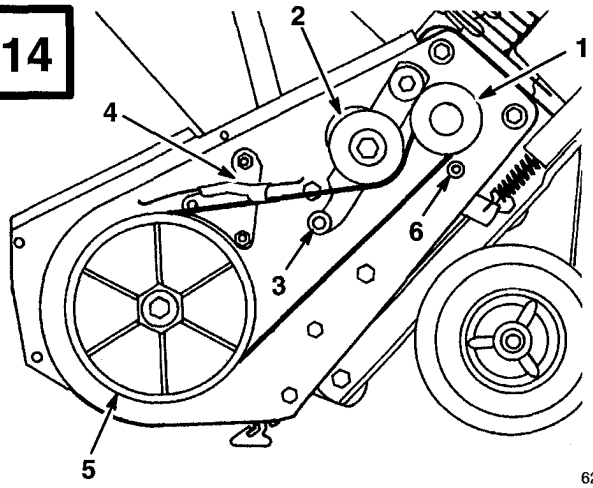

626

1. Engine pulley
2. Idler pulley
3. Roller
4. Brake arm assembly
5. Rotor pulley
6. Belt guide

15

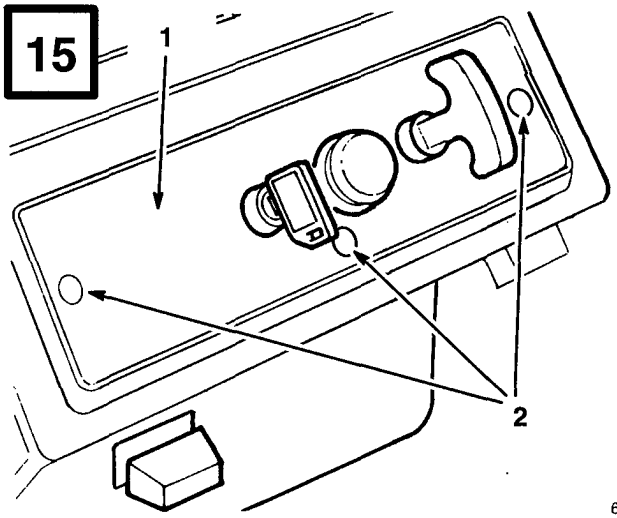

643

1. Control panel
2. Mounting screws

16

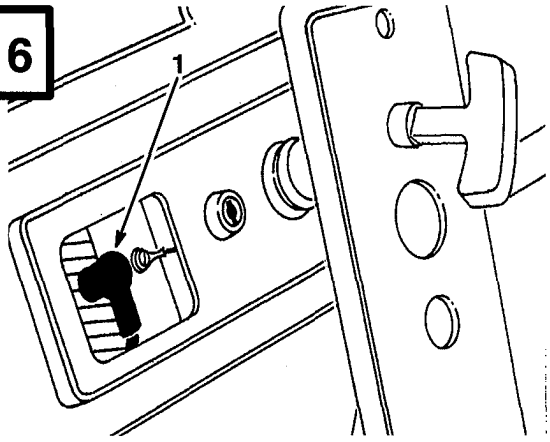

628

1. Spark plug wire

17

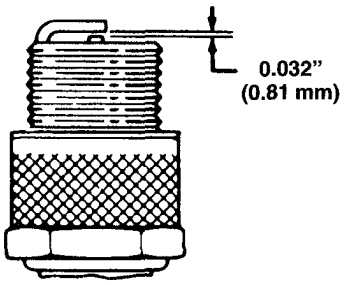

110

18

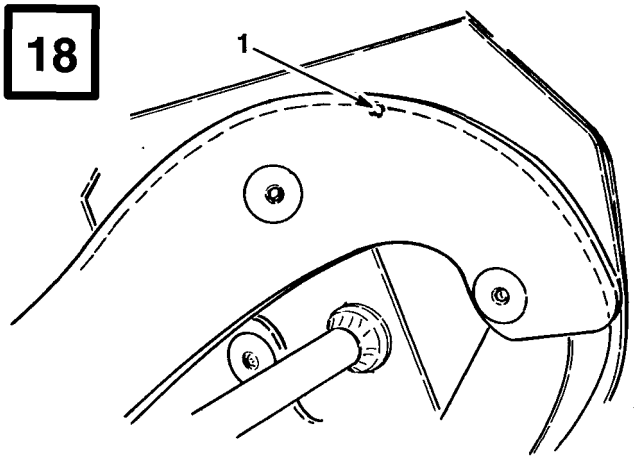

1. Wear indicator hole

19

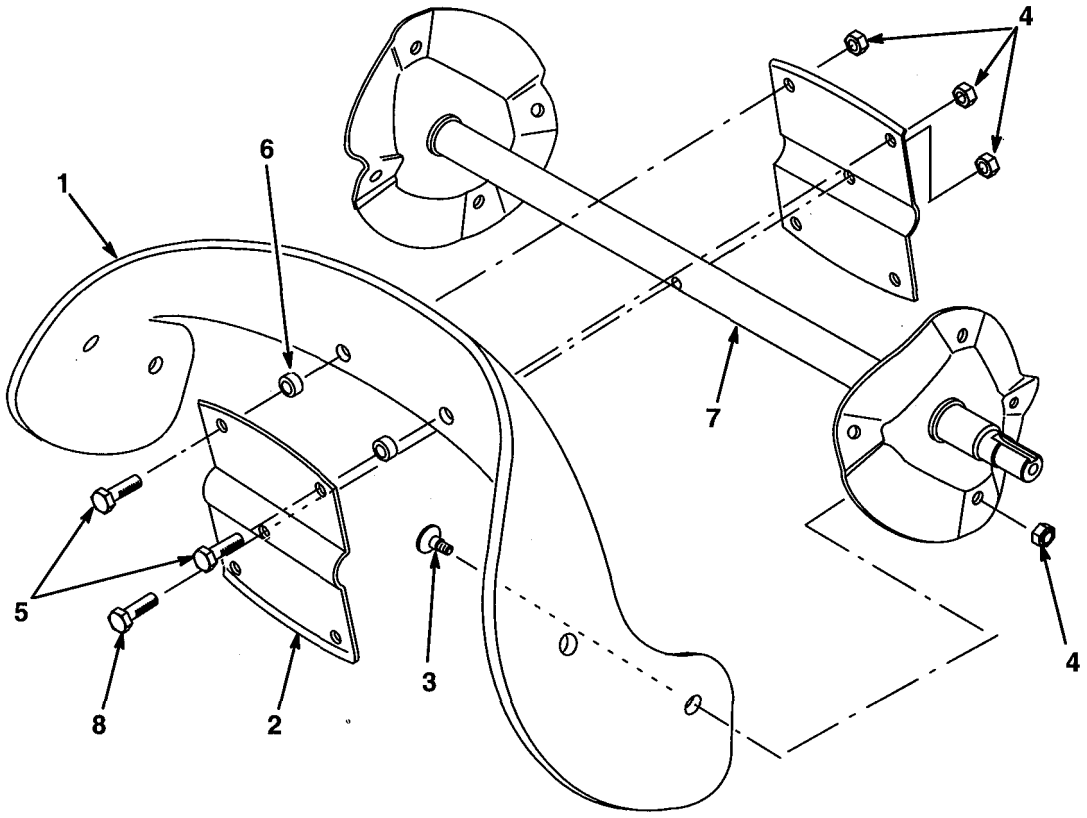

680

1. Rotor blade (2)
2. Rotor half (2)
3. Torx screw (8)
4. Locknut (13)
5. Hex–head capscrew (4)
6. Spacer (4)
7. Auger shaft assembly
8. Hex–head screw

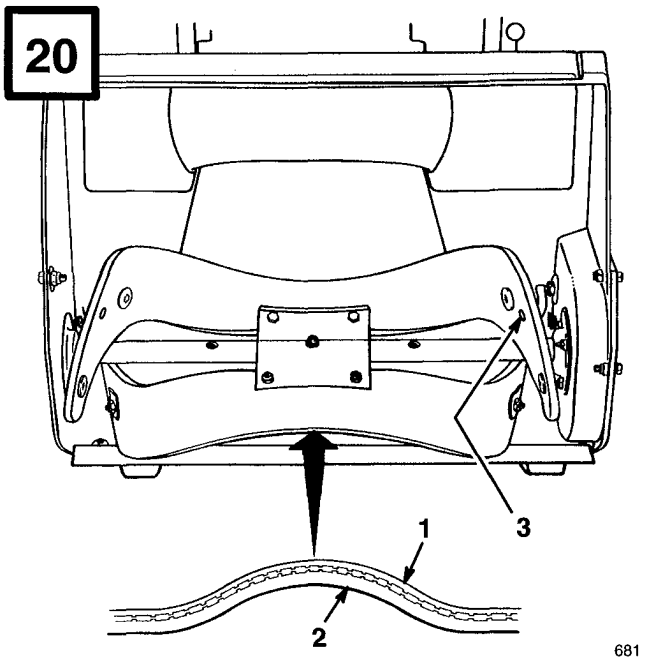

1. Thin layer
2. Thick layer
3. Wear indicator hole

Contents

	Page
Introduction	1
Safety	2
Before Operating	2
While Operating	2
Maintaining Snowthrower	3
Safety and Instruction Decals	4
Assembly	4
Install Wheels	4
Install Chute Crank	4
Install Discharge Chute	5
Install Handle	5
Install Control Cable	5
Before Starting	5
Mix Gasoline And Oil	5
Operation	6
Starting/Stopping Engine	6
Operating Tips	7
Maintenance	8
General Maintenance	8
Adjusting Control Bar	8
Draining Gasoline	8
Replacing Scraper	8
Replacing Drive Belt	9
Replacing Spark Plug	9
Adjusting Carburetor	9
Replacing Rotor Blades	9
Storage	10
The Toro Starting Guarantee	11
Guaranteed To Start Maintenance Record	13
Warranty	16

Introduction

Thank you for purchasing a Toro product.

All of us at Toro want you to be completely satisfied with your new product, so feel free to contact your local Authorized Service Dealer for help with service, genuine Toro parts, or other information you may require.

Whenever you contact your Authorized Service Dealer or the factory, always know the model and serial numbers of your product. These numbers will help the Service Dealer or Service Representative provide exact information about your specific product. You will find the model and serial number decal located in a unique place on the product (Fig. 1).

For your convenience, write the product model and serial numbers in the space below.

Model No: _____

Serial No. _____

Read this manual carefully to learn how to operate and maintain your product correctly. Reading this manual will help you and others avoid personal injury and damage to the product. Although Toro designs, produces and markets safe, state-of-the-art products, you are responsible for using the product properly and safely. You are also responsible for training persons who you allow to use the product about safe operation.

The Toro warning system in this manual identifies potential hazards and has special safety messages that help you and others avoid personal injury, even death. DANGER, WARNING and CAUTION are signal words used to identify the level of hazard. However, regardless of the hazard, be extremely careful.

DANGER signals an extreme hazard that will cause serious injury or death if the recommended precautions are not followed.

WARNING signals a hazard that may cause serious injury or death if the recommended precautions are not followed.

CAUTION signals a hazard that may cause minor or moderate injury if the recommended precautions are not followed.

Two other words are also used to highlight information. "Important" calls attention to special mechanical information and "Note" emphasizes general information worthy of special attention.

The left and right side of the machine is determined by standing behind the handle in the normal operator's position.

Safety

To ensure maximum safety, best performance, and to gain knowledge of the product, it is essential that you or any other operator of the snowthrower read and understand the contents of this manual before the motor is ever started. Pay particular attention to the safety alert symbol ⚠ which means CAUTION, WARNING OR DANGER — "personal safety instruction." Read and understand the instruction because it has to do with safety. Failure to comply with instruction may result in personal injury.

This snowthrower is designed and tested to offer safe and effective service, provided it is operated in strict accordance with the following Safety Instructions. Failure to comply with the following instructions **MAY RESULT IN PERSONAL INJURY.**

Before Operating

1. Read and understand the contents of this manual before operating the snowthrower. Become familiar with all controls and know how to stop engine and snowthrower quickly.
2. Never allow children to operate the snowthrower. Adults should operate the snowthrower only after reading this manual.
3. Keep everyone, especially children and pets, away from snowthrower and area of operation.
4. Inspect area thoroughly where snowthrower will be used. Remove doormats, sleds, boards, sticks, wire and any other foreign objects which might be picked up and thrown by the snowthrower.
5. Keep all shields and safety devices in place. If a shield, safety device or decal is illegible, damaged or lost, repair or replace it before beginning operation. Also, tighten any loose nuts, bolts or screws.
6. Wear adequate winter clothing and rubber boots that will ensure proper footing on slippery surfaces. Do not wear loose–fitting clothing that could possibly get caught in moving parts.
7. Always wear safety glasses or eye shields during operation or while performing an adjustment or repair to protect eyes from foreign objects that may be thrown from the machine.
8. Fill fuel tank with gasoline before starting the engine. Avoid spilling any gasoline. Because fuel is highly flammable, handle it carefully. **DO NOT SMOKE WHILE HANDLING GASOLINE.**
   A. Use an approved gasoline container.
   B. Fill fuel tank outdoors, not indoors. **NEVER ADD FUEL TO AN ENGINE THAT IS RUNNING OR HOT.** Engine must be cool to reduce potential fire hazard.
   C. Open doors if engine will be started in the garage because exhaust fumes are dangerous and could possibly be deadly. Do not run engine indoors.
   D. Wipe up any spilled gasoline. Reinstall gasoline container cap and snowthrower fuel tank cap securely before starting the engine.
9. Allow engine to warm up outdoors before operating. Do not run engine indoors.

While Operating

10. Use only the extension cord provided with the CCR™ 3000 Electric Start Model. Do not plug the extension cord into outlet while standing in

water or when hands are wet. Do not use cord if gasoline has been spilled. If extension cord is damaged, replace immediately (Part No. 28–9170).

11. Never direct discharge toward or operate snowthrower near bystanders, glass enclosures, automobiles and trucks, window wells or a drop–off. Never allow anyone in front of snowthrower.

12. Keep people and pets a safe distance away from the snowthrower and area of operation.

13. Operate the snowthrower only when there is good visibility or light. Always maintain secure footing and balance and keep a firm grip on the handle. Walk; never run.

14. **DO NOT USE SNOWTHROWER ON A ROOF.**

15. Be attentive when using the snowthrower, and stay alert for holes in the terrain and other hidden hazards.

16. **STAY AWAY FROM DISCHARGE OPENING WHILE OPERATING THE SNOWTHROWER.** Keep face, hands, feet, and any other part of your body or clothing away from concealed, moving, or rotating parts.

17. Never clear snow off steep slopes or across the faces of slopes. Exercise extreme caution when changing direction on slopes.

18. Do not overload the snowthrower by clearing snow at too fast a rate.

19. Use extreme caution when crossing or operating snowthrower on walks, roads or gravel or crushed rock drives. Refer to Operating Tips, page 7, item 4 for correct operating procedure.

20. If a foreign object is hit or snowthrower vibrates abnormally, stop engine by turning key to OFF and wait for all moving parts to stop. Check snowthrower immediately for possible damage, an obstruction or loose parts. Vibration is generally a sign of trouble. Repair any damage before operating snowthrower again.

21. Before adjusting, cleaning, repairing or inspecting the snowthrower, or before unclogging the discharge chute, stop engine by turning key to OFF and wait for all moving parts to stop. Do not make adjustments while engine is running.

22. **WHENEVER YOU LEAVE THE OPERATING POSITION, STOP ENGINE BY TURNING KEY TO OFF. REMOVE KEY FROM SWITCH IF UNIT WILL BE UNATTENDED.**

23. Let snowthrower run for a few minutes after clearing snow so moving parts do not freeze.

Maintaining Snowthrower

24. REMOVE KEY FROM SWITCH when storing snowthrower. Store key in a memorable place.

25. Never store snowthrower with fuel in fuel tank inside a building where open flame or sparks are present. Allow engine to cool before storing. **NEVER STORE SNOWTHROWER IN HOUSE (LIVING AREA) OR BASEMENT BECAUSE GASOLINE AND FUMES ARE HIGHLY FLAMMABLE, EXPLOSIVE, AND DANGEROUS IF INHALED.**

26. Perform only those maintenance instructions described in this manual. Remove key from switch before performing maintenance procedures to prevent the possibility of accidental starting. If major repairs are ever needed, contact your local Authorized TORO Service Dealer for assistance.

27. Keep snowthrower in safe operating condition by keeping nuts, bolts, and screws tight. Check all fasteners frequently to ensure they are tight.

28. Maintain or replace safety and instruction labels, as necessary.

29. To ensure best performance and safety, purchase genuine TORO replacement parts and accessories to keep your TORO all TORO. **NEVER USE "WILL FIT" REPLACEMENT PARTS AND ACCESSORIES.** The TORO logo ensures genuineness.

Safety and Instruction Decals

Safety decals and instructions are easily visible to the operator and are located near any area of potential danger. Replace any decal that is damaged or lost.

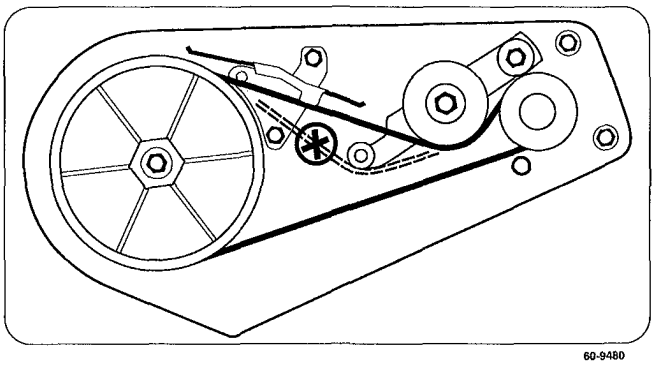

ON INSIDE OF BELT COVER
(Part No. 60–9480)



ON HANDLE
(Part No. 66–6870)

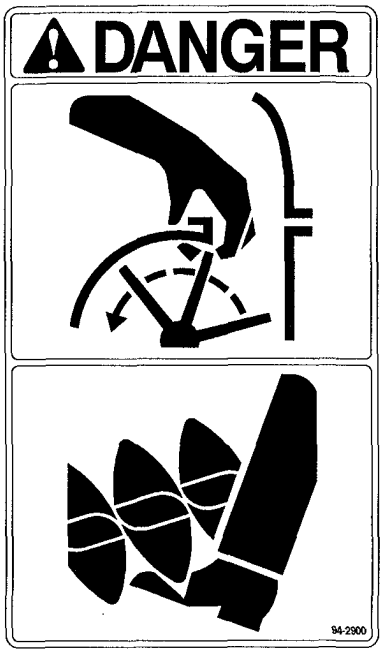

ON CHUTE
(Part No. 94–2900)

Assembly

Note: Determine left and right sides of the snowthrower by standing behind it while it is in the normal operating position.

Install Wheels (Fig. 2)

1. Carefully turn machine onto its left side. Place a wood block under the left axle end.
2. Slide the **short** spacer and a wheel onto the right axle end. The side of the wheel with six spokes must face the center of the machine.
3. Slide a pushnut onto the end of the axle.
4. Using a hammer, strike the pushnut to seat the nut **FIRMLY** in place.
5. Turn the machine over on its right side so that the left axle end is pointing up.
6. For the left side, slide the **long** spacer and a wheel onto the left axle end. The side of the wheel with six spokes must face the center of the axle.
7. Place a wood block under the right axle end. Repeat steps 3 and 4.

Install Chute Crank (Fig. 3)

1. Insert flattened end of chute crank through hole in shroud while aligning mounting bracket with holes in lower handle. Slowly rotate crank until flattened end fits into hidden gear opening and

chute ring turns with crank. Make sure plastic bushing is fully inserted into hole in mounting bracket, then secure mounting bracket to handle with (2) capscrews and locknuts.

Install Discharge Chute (Fig. 4)

1. Set discharge chute onto chute ring. Align hole in back of chute with center hole in ring and install a carriage bolt and sems locknut. Position nut on outside of chute.

   Note: Chute ring may be rotated to ease assembly of discharge chute.

2. Secure chute to remaining holes in chute ring and tighten all nuts **SECURELY**.

Install Handle (Fig. 5)

1. Remove tie securing control cable to lower handle.

2. Position upper handle so that curved control bar is on top of handle, not underneath it.

3. Secure upper and lower handle in place with (3) handle bolts, (1) eyebolt, and (4) locknuts. Use eyebolt to mount lower left side of handle. Eyebolt must be positioned perpendicular to handle when tightened.

Install Control Cable (Fig. 6)

1. Route control cable through eyebolt and hook upper end in rear hole (hole with arrow) in control bar bracket.

2. Move control bar back toward handle until slack in cable is removed. The gap between the control bar bracket and handle should be approximately 1/16"–1/8". See insert, Figure 6. If an adjustment is required, refer to Adjusting Control Bar, page 8.

Note: The control cable must always have slack in it when in the disengaged position.

Before Starting

⚠ DANGER

POTENTIAL HAZARD
- **In certain conditions gasoline is extremely flammable and highly explosive.**

WHAT CAN HAPPEN
- **A fire or explosion from gasoline can burn you, others, and cause property damage.**

HOW TO AVOID THE HAZARD
- **Use a funnel and fill the fuel tank outdoors, in an open area, when the engine is cold. Wipe up any gasoline that spills.**
- **Do not fill the fuel tank completely full. Add gasoline to the fuel tank until the level is 1/4" to 1/2" (6 mm to 13 mm) below the bottom of the filler neck. This empty space in the tank allows gasoline to expand.**
- **Never smoke when handling gasoline, and stay away from an open flame or where gasoline fumes may be ignited by a spark.**
- **Store gasoline in an approved container and keep it out of the reach of children.**
- **Never buy more than a 30-day supply of gasoline.**

Mix Gasoline And Oil (Fig. 7)

Use clean, fresh lead-free gasoline, including *oxygenated* or *reformulated* gasoline, with an octane rating of 85 or higher. To ensure freshness, purchase only the quantity of gasoline that can be used in 30 days. Use of lead-free gasoline results in fewer combustion chamber deposits and longer spark plug life. Use of premium grade fuel is not necessary or recommended.

1. APPROVED OIL—For simplicity and best engine performance, mix the contents of one 5.2–ounce bottle of Toro 50:1 Two–Cycle Oil

with two gallons of fresh, unleaded regular gasoline. You can also use Toro "Easy Mix" Two–Cycle Oil (3.2 ounce bottle mixed one per gallon of gasoline; 40:1 ratio) in this Toro two–cycle engine. Leaded regular gasoline may be used if unleaded regular is not available.

Toro Two–Cycle Oil is specially formulated to provide superior lubrication, make starting easy, and prolong engine life. If Toro Two–Cycle Oil is not available, mix two gallons of gasoline and 5.2 ounces of another high grade two–cycle oil that has the NMMA or BIA–TCW certification printed on the label.

NEVER USE AUTOMOTIVE OIL (i.e. SAE 30, 10W30 etc.), TWO–CYCLE OIL THAT IS NOT CERTIFIED NMMA/BIA–TCW, OR THE WRONG MIX RATIO BECAUSE THE ENGINE CAN BE DAMAGED, AND IT WOULD NOT BE COVERED BY THE TORO WARRANTY.

2. Mixing Gasoline and Oil—Pour a half gallon of gasoline into an approved gasoline container (preferably plastic, not metal) and add the correct amount of two–cycle oil. Reinstall cap on gasoline container and shake the container to mix oil and gas thoroughly. Remove cap and add remaining amount of gasoline.

Toro also recommends that Toro Stabilizer/Conditioner be used regularly in all Toro gasoline powered products during operation and storage seasons. Toro Stabilizer/Conditioner cleans the engine during operation and prevents gum–like varnish deposits from forming in the engine during periods of storage.

IMPORTANT: NEVER USE METHANOL, GASOLINE CONTAINING METHANOL, GASOHOL CONTAINING MORE THAN 10% ETHANOL, PREMIUM GASOLINE, OR WHITE GAS BECAUSE ENGINE FUEL SYSTEM DAMAGE COULD RESULT.

DO NOT USE FUEL ADDITIVES OTHER THAN THOSE MANUFACTURED FOR FUEL STABILIZATION DURING STORAGE SUCH AS TORO'S STABILIZER/CONDITIONER OR A SIMILAR PRODUCT. TORO'S STABILIZER/CONDITIONER IS A PETROLEUM DISTILLATE BASED CONDITIONER/STABILIZER. TORO DOES NOT RECOMMEND STABILIZERS WITH AN ALCOHOL BASE SUCH AS ETHANOL, METHANOL OR ISOPROPYL. ADDITIVES SHOULD NOT BE USED TO TRY TO ENHANCE THE POWER OR PERFORMANCE OF MACHINE.

Note: Do not mix gasoline and oil in the product fuel tank. Oil that is at room temperature mixes easier and more thoroughly than cold oil.

50:1 GAS/OIL Mixing Chart

U.S. GALLON	
Gasoline	**Oil**
1 gallon	2.6 oz.
1.5 gallons	3.9 oz.
2 gallons	5.2 oz.

Operation

Starting/Stopping Engine (Fig. 8)

1. CONTROLS—Key switch, primer, recoil starter, and electric start button are located on the control panel. The choke is just below the control panel.

2. Turn key to ON and pull choke out.

3. Cover hole in center of primer with thumb and push once. An additional prime may be necessary in extremely cold temperatures.

   Note: Choke and primer are usually not necessary when starting a warm engine.

4. ELECTRIC STARTING—Connect extension cord to snowthrower and standard household power outlet. Push starter button.

   IMPORTANT: Excessive running of the electric starter could damage the starter due to overheating. To prevent possible damage, do not run electric starter more than 10 times at intervals of 5 seconds ON, 5 seconds OFF. Then wait more than 40 minutes to allow starter to cool before continuing to run starter. Before repeating engine starting procedure, check that ignition key switch is ON, and make sure there is fresh fuel in fuel tank. If engine continues to fail to start, servicing may be needed.

5. RECOIL STARTING—Hold snowthrower with one hand and pull recoil starter vigorously with other hand.

6. When engine starts, push in choke slowly.

7. TO ENGAGE ROTOR—Squeeze control bar to handle. When the control bar handle is released, the rotor blades stop, but the engine continues to run.

8. TO STOP ENGINE—Release control bar to stop rotor, turn key to OFF, and wait for all moving parts to stop before leaving operator's position.

Operating Tips (Fig. 9)

1. **ADJUSTING DISCHARGE CHUTE** — Rotate chute crank clockwise to move discharge chute to the right and counterclockwise to move chute to the left. The chute deflector handle on top of the discharge chute controls the height of the snow stream. Do not overtighten the chute deflector mounting nuts so excessive force is required to adjust the deflector.

2. **SELF-PROPELLING ACTION** — The snowthrower clears down to the ground and propels itself forward when the handle is raised and the snowthrower is tilted **slightly** forward so rotor blades strike the ground. The wheels do not have to touch the ground in order to self-propel. The further you tilt the handle forward, the faster the snowthrower self-propels. However, depth and height of snow affects forward speed. Always overlap each swath and discharge downwind whenever possible.

⚠ WARNING

POTENTIAL HAZARD
- **When engine is running, discharge rotor is turning.**

WHAT CAN HAPPEN
- **Objects thrown from discharge chute can cause personal injury.**

HOW TO AVOID THE HAZARD
- **Keep yourself and other people away from discharge opening when engine is running.**
- **Before leaving operating position, stop engine by turning key to OFF.**

3. Keep the area to be cleared free of stones, toys or other foreign objects which may be picked up and thrown by the rotor blades. Such items could be covered by snowfall and, therefore, unnoticed until struck by the rotor blades. Always be sure to keep children and pets away from area of operation.

4. Should you find it necessary to clear snow from crushed rock or gravel, push down on handle to raise rotor blades clear of loose material that could be thrown by the blades.

5. In some snow and cold weather conditions, some controls and moving parts may freeze solid. Therefore, when any control becomes hard to operate, stop the engine. Check all parts for excessive freeze up. **DO NOT USE EXCESSIVE FORCE WHEN TRYING TO OPERATE FROZEN CONTROLS.** Free all controls and moving parts before operating.

6. **AFTER CLEARING SNOW** — Let engine run for a few minutes so ice does not freeze moving parts solid. After engine is shut off, wipe ice and snow off entire unit. Operate chute crank several times to clear mechanism of snow.

IMPORTANT: STORE SNOWTHROWER IN OPERATING POSITION ON ITS WHEELS. TIPPING OR STORING UNIT FORWARD ONTO FRONT HOUSING MAY CAUSE HARD STARTING.

Maintenance

General Maintenance

Normally, the only maintenance required is cleaning the unit and tightening nuts, bolts, and screws. However, the scraper, drive belt, rotor blades, and spark plug should be checked once a year.

Adjusting Control Bar

Periodically check control bar for proper adjustment.

1. Turn ignition key to OFF.

2. CHECK ADJUSTMENT (Fig. 9)—Move control bar back toward handle until slack in cable is removed. Gap between control bar bracket and handle should be approximately 1/16"–1/8". If cable is too loose or too tight, proceed to step 3 for adjustment procedure.

   Note: The control cable must always have slack in it when in the disengaged position.

3. ADJUST CABLE—Unhook upper cable end from hole in control bar bracket (Fig. 6). Slide spring cover up cable to expose cable adjuster (Fig. 10). Unhook lower cable end from adjuster. Reposition cable end in a higher or lower hole on adjuster to obtain a gap of 1/16"–1/8" between control bar bracket and handle. (Positioning cable end in a lower hole decreases gap; positioning cable end in a higher hole increases gap.) Reinstall upper cable end into rear hole in control bar bracket (hole with arrow) (Fig. 6). Slide spring cover over cable adjuster and recheck adjustment. Repeat procedure until the proper gap of 1/16"–1/8" between control bar bracket and handle is obtained.

4. After extended use the drive belt may wear and proper belt tension may not be maintained. Improper belt tension causes belt slippage and decreases the snowthrower's performance under a heavy load. Belt slippage may occur after 2–3 seasons of normal usage (10–15 hours). If drive belt slips (continuous squealing noise) under heavy load, increase belt tension by repositioning spring end into forward hole in control bar bracket. Readjust cable (see steps 2–3).

   IMPORTANT: Unnecessary use of forward adjusting hole in control bar bracket reduces drive belt life. Occasional belt slippage (squealing) may occur in extremely wet conditions due to moisture in drive system. To remove moisture, start rotor and operate under no load for 30 seconds. Once moisture is removed, belt should not slip.

Draining Gasoline

1. Stop engine. Remove key from switch.

2. Remove cap from fuel tank and use a pump type syphon to drain fuel into a clean gas can.

   Note: This is the only procedure recommended for draining fuel.

Replacing Scraper (Fig. 11-12)

Before each season, inspect scraper for wear. If thickness of bottom of scraper is less than 1/16" (1.6 mm), replace scraper (Fig. 11).

1. Turn ignition key to OFF.

2. Drain gasoline from fuel tank; refer to Draining Gasoline, page 8.

3. Tip snowthrower forward onto front housing.

4. Remove (3) carriage bolts and locknuts holding scraper in place (Fig. 12). Remove scraper by sliding it to right and down.

5. Install new scraper to housing using carriage bolts and nuts.

Replacing Drive Belt (Fig. 13-14)

Inspect drive belt before each season. If ribs on inside of belt are damaged or belt is worn, replacement is necessary.

1. Turn ignition key to OFF.

2. Remove (3) self tapping screws, (2) capscrews, (1) washer and (2) nuts securing belt cover to snowthrower frame (Fig. 13). Set belt cover aside.

3. REMOVING BELT (Fig. 14)—Push down on idler pulley allowing belt to be removed from rotor pulley, brake arm assembly, and engine pulley.

4. INSTALLING BELT (Fig. 14)—Loop belt around engine pulley, under idler pulley, over roller, through brake assembly, and around rotor pulley.

   IMPORTANT: Belt must be on top of roller as shown.

5. Reinstall belt cover. Tighten fasteners securely, but DO NOT OVERTIGHTEN.

Replacing Spark Plug (Fig. 15-17)

Before each snow season, check the spark plug. If electrodes in center of plug are dark or have deteriorated, install a new plug. Use an NGK BPMR4A spark plug and set gap at .032" (.81 mm).

1. REMOVE CONTROL PANEL (Fig. 15)—Remove (3) capscrews securing control panel to housing. Remove ignition key and lift off panel, allowing it to hang on recoil rope.

2. REMOVE SPARK PLUG (Fig. 16)—Pull wire off spark plug and remove plug. Examine the plug and replace if cracked, fouled or dirty. **DO NOT SANDBLAST, SCRAPE OR CLEAN SPARK PLUG BECAUSE DIRT MAY RELEASE AND FALL INTO CYLINDER CAUSING ENGINE DAMAGE.**

3. INSTALL SPARK PLUG—Set air gap (Fig. 17) between electrodes at .032" (.81 mm). Install plug and tighten to 15 ft–lb (20.4 N·m). If torque wrench is not used, tighten plug firmly. Push wire onto spark plug and reinstall control panel with (3) capscrews.

Adjusting Carburetor

The carburetor has been factory set, and no adjustment is required. However, when operating snowthrower at altitudes of 5000 feet above sea level or higher, carburetor jets may have to be changed. Contact your local Authorized Toro Service Dealer for assistance.

Replacing Rotor Blades (Fig. 18-20)

Before each snow season, inspect rotor blades for wear. When blade edge has worn to the wear indicator hole (Fig. 18), the blades must be replaced to ensure proper performance and prevent damage to underside of snowthrower. Always replace both blades at the same time.

Note: Whenever rotor blades are replaced, scraper should also be replaced to ensure proper snowthrower operation and performance.

Removing Old Blade

1. Remove (4) torx screws and (4) locknuts securing outer edges of rotor blade to rotor shaft assembly (Fig. 19).

2. Next, remove (2) hex–head capscrews, spacers and locknuts securing center of blade to rotor halves (Fig. 19).

3. Loosen the hex–head screw securing the rotor halves to the auger shaft assembly (Fig. 19).

4. Slide the blade out from between the rotor halves (Fig. 19).

Installing New Blade

1. The rotor blades are made of laminated rubber. Examine the edge of a blade to see the difference in layer thicknesses (Fig. 20). (Some blades have a part number on the thick side of the blade.)

   Both blades must be installed with the thick layer on the **inside** of the curve. If one blade is installed with the thick layer on the outside of the curve and the other blade installed with the thick layer on the inside of the curve, the blades will be unbalanced, causing the snowthrower to "hop" or "bounce."

2. Insert the new blade between the rotor halves. Secure it to the rotor halves with (2) hex–head capscrews, (2) spacers and (2) locknuts (Fig. 19). Position bolt heads on thick (bottom) side of blade. Curve the blade, and secure it with the remaining (4) torx screws and locknuts (position screw heads on thick side of blade). Tighten all screws and nuts securely.

Storage

1. FUEL SYSTEM PREPARATION–

- Add Toro Stabilizer/Conditioner to the fuel tank (one ounce per gallon of fuel).
- Run engine for five minutes to distribute conditioned fuel through fuel system.
- Stop engine, allow it to cool, and drain fuel tank or run engine until it stops.
- Restart the engine again and run it until it stops.
- Either choke or prime the engine, restart it a third time and run engine until it will not restart.
- Dispose of fuel properly. Recycle per local codes.
- **DO NOT store STABILIZED gasoline over 90 days.**

2. CYLINDER/PISTON CARE—Slowly pull recoil starter until resistance is felt due to compression pressure, then stop. Release starter tension slowly to prevent engine from reversing due to compression pressure. This position closes both the intake and exhaust ports which prevents corrosion of the cylinder bore.

3. TIGHTEN FASTENERS AND CLEAN—Tighten screws, bolts, and nuts if necessary. Repair or replace damaged parts. Clean unit thoroughly.

4. STORE SNOWTHROWER—Cover snowthrower and store in a clean, dry place. **NEVER STORE SNOWTHROWER IN THE HOUSE OR BASEMENT.**

It is Toro's policy to design and produce high quality products. To ensure customer satisfaction, Toro has extensive warranty coverage on its products. Your TORO GTS Engine powered product has two warranty statements covering it. The Toro Total Coverage Guarantee is our standard warranty statement and is printed on the last page of this manual.

In addition to The Toro Total Coverage Guarantee, we are so confident that the TORO GTS Engine will provide a high level of performance and durability that we are providing a *Starting Guarantee!* Please read the details of this additional warranty coverage printed below.

THE TORO STARTING GUARANTEE

A Five Year Limited Warranty
On All Toro GTS-5 Engines

What Is Covered?

The Toro Company guarantees that your TORO GTS-5 Engine will start on the first or second pull for five years from the date of purchase—if you provide the routine maintenance it requires—or we will fix it. The cost of parts and labor are included, but you must pay transportation costs.

What Must You Do To Keep The Warranty In Effect?

You must maintain your TORO GTS-5 Engine by following the maintenance schedule detailed in the operator's manual, at your expense. You must record this work in the maintenance chart provided in your owner's manual and keep your proof of purchase.

How Do You Get Service?

If the starting performance of your TORO GTS-5 Engine should diminish to the point where it will not start in one or two pulls by a normal, able-bodied adult, you should follow the procedures below:

1. Contact any Authorized TORO Service Dealer, TORO Master Service Dealer, or TORO Distributor (listed in the Yellow Pages under "Lawn" or "Lawn Mowers").

2. He will either instruct you to return the product to him or recommend another Authorized TORO Service outlet which might be more convenient.

3. Bring the product, your maintenance records, and proof of purchase to the Service Dealer.

If, for any reason, you are dissatisfied with the Dealer's analysis of your engine's starting condition, or the assistance provided, please feel free to contact us:

TORO Customer Service Department
8111 Lyndale Avenue South
Bloomington, Minnesota 55420-1196

What Does This Warranty Not Cover?

This Warranty does not cover:

1. Any repairs on products used commercially.
2. Normal maintenance including replacement of spark plugs, air filter, fuel filter, and carburetor adjustments.
3. Oil change and lubrication.
4. Repairs or adjustments due to:
   a. Failure to follow proper maintenance procedures;
   b. Rotary mower blade or snowthrower auger/paddles striking an object;
   c. Contaminants in the fuel system;
   d. Improper fuel or fuel mixture (consult your owner's manual if in doubt);
   e. Failure to drain the fuel system prior to any period of non-use over three months;
   f. Operation misuse, neglect or accidents;
   g. Repairs or attempted repairs by anyone other than an Authorized TORO Service Dealer.
5. Special operational conditions where starting may require more than two pulls, including:
   a. First time starts after extended period of non-use or seasonal storage;
   b. Cool temperature starts of rotary mowers such as those found in early spring and late fall may require an additional pull or two;
   c. Improper starting procedures. If you are having difficulty starting your unit, please check the operator's manual to ensure you are using the correct starting procedures. This can save an unnecessary visit to a Service Dealer.

All warranty repairs reimbursable under this warranty must be performed by an Authorized TORO Service Dealer using Toro approved replacement parts.
The above remedy through repair by an Authorized TORO Service Dealer is the purchaser's sole remedy.

How Does State Law Relate To This Warranty?

There is no other express warranty except for The Toro Total Coverage Guarantee. All implied warranties of merchantability (that the product is fit for ordinary use) and fitness for use (that the product is fit for a particular purpose) are limited to the duration of the express warranty.

Some states do not allow limitation on how long implied warranties last, so the above exclusion may not apply to you.

The Toro Company is not liable for indirect, incidental or consequential damages in connection with the use of the product, including any cost or expense of providing substitute equipment or service during periods of malfunction or non-use.

Some states do not allow exclusions of incidental or consequential damages, so the above exclusion may not apply to you.

This warranty gives you specific legal rights, and you may also have other rights which vary from state to state.

GUARANTEED TO START MAINTENANCE RECORD

To keep the starting guarantee in effect, you must perform the following maintenance after every 25 operating hours, more often in dusty and dirty conditions. Follow the procedures in this Operator's Manual and record information on this chart.

Date	Hours Used	Air Cleaner Service (Mowers only)	Change Oil Doesn't Apply to 2–Cycle	Lubricate Wheels (Mowers only)	Check Spark Plug	Storage

TORO

Gas Powered Consumer Products Except WPM

THE TORO TOTAL COVERAGE GUARANTEE

A Full Two–Year Warranty
(Limited Warranty for Commercial Use)

What Is Covered By This Express Warranty?

The Toro Company promises to repair any TORO Product used for normal residential purposes* if defective in materials or workmanship for a period of two years from the date of purchase. The cost of parts and labor is included, but the customer pays the transportation costs.

Transportation within a 15 mile radius of the servicing dealer is covered under this warranty for two–stage snowthrowers, walk behind debris equipment and all TORO Wheel Horse riding products. Single stage snowthrowers, and other products not specifically covered, are excluded from the transportation coverage provided by this warranty.

What Products Are Covered By This Warranty?

This warranty applies to all gasoline powered consumer products except walk power mowers. ProLine riding products, wide area walk behind mowers and 18" and 21" mowers are covered by separate warranty statements.

How About Commercial Use?

TORO Consumer Products used for commercial, institutional or rental use are covered by a limited warranty for the following time periods from the date of purchase:

Products	Warranty Period
• 300, 400 and 500 Series Lawn and Garden Tractors	
Chassis	1 year limited warranty
Engine	2 year limited warranty
• 260 Series Lawn and Garden Tractors, XL Lawn Tractors, Rear Engine Riders, Straight Shaft Trimmers, and Backpack Blowers	90 day limited warranty
• All Others	45 day limited warranty

How Do You Get Warranty Service?

Should you feel your TORO Product contains a defect in material or workmanship, contact the dealer who sold you the product or any Authorized TORO Service Dealer or TORO Master Service Dealer. The Yellow Pages of your telephone directory is a good reference source. The dealer will either arrange service at his/her dealership or recommend another Authorized Service Dealer who may be more convenient. You may need proof of purchase (copy of registration card, sales receipt, etc.) for warranty validation.

If for any reason you are dissatisfied with the Service Dealer's analysis of the defect in materials or workmanship or if you need a referral to a TORO Service Dealer, please feel free to contact us at the following address:

Toro Customer Service Department
8111 Lyndale Avenue South
Bloomington, MN 55420–1196
612–888–8801
800–348–2424

What Must You Do To Keep The Warranty In Effect?

You must maintain your TORO Product by following the maintenance procedures described in the operator's manual. Such routine maintenance, whether performed by a dealer or by you, is at your expense.

What Does This Warranty Not Cover? and How Does Your State Law Relate To This Warranty?

There is no other express warranty except the TORO Starting Guarantee on GTS Engines. This express warranty does not cover:

- Cost of regular maintenance service or parts, such as filters, fuel, lubricants, tune–up parts, blade sharpening, brake and clutch adjustments.

- Any product or part which has been altered or misused or required replacement or repair due to normal wear, accidents, or lack of proper maintenance.

- Repairs necessary due to improper fuel, contaminants in the fuel system, or failure to properly prepare the fuel system prior to any period of non–use over three months.

- Pickup and delivery charges for distances beyond a 15 mile radius from an Authorized TORO Service Dealer (covered products only).

All repairs covered by this warranty must be performed by an Authorized TORO Service Dealer using Toro approved replacement parts.

Repair by an Authorized TORO Service Dealer is your sole remedy under this warranty.

The Toro Company is not liable for indirect, incidental or consequential damages in connection with the use of the TORO Products covered by this warranty, including any cost or expense of providing substitute equipment or service during reasonable periods of malfunction or non–use pending completion of repairs under this warranty. Some states do not allow exclusions of incidental or consequential damages, so the above exclusion may not apply to you.

This warranty gives you specific legal rights, and you may also have other rights which vary from state to state.

* Normal residential purposes means mowing the lawn on the same lot as your home. Use at more than one location is considered commercial use and the commercial use warranty would apply.

COUNTRIES OTHER THAN THE UNITED STATES OR CANADA

Customers who have purchased TORO Products exported from the United States or Canada should contact their TORO Distributor (Dealer) to obtain guarantee policies for your country, province, or state. If for any reason you are dissatisfied with your Distributor's service or have difficulty obtaining guarantee information, contact the TORO importer. If all other remedies fail, you may contact us at The Toro Company.