FORM NO. 3318–573 Rev. A

TORO®

824 XL Power Throw™

Snowthrower

Model No. 38083 – 7900001 & Up

Operator's Manual

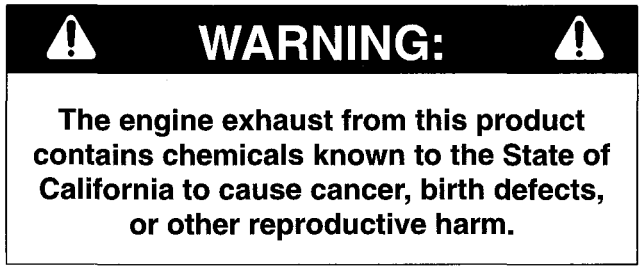
WARNING:
The engine exhaust from this product contains chemicals known to the State of California to cause cancer, birth defects, or other reproductive harm.

Figures

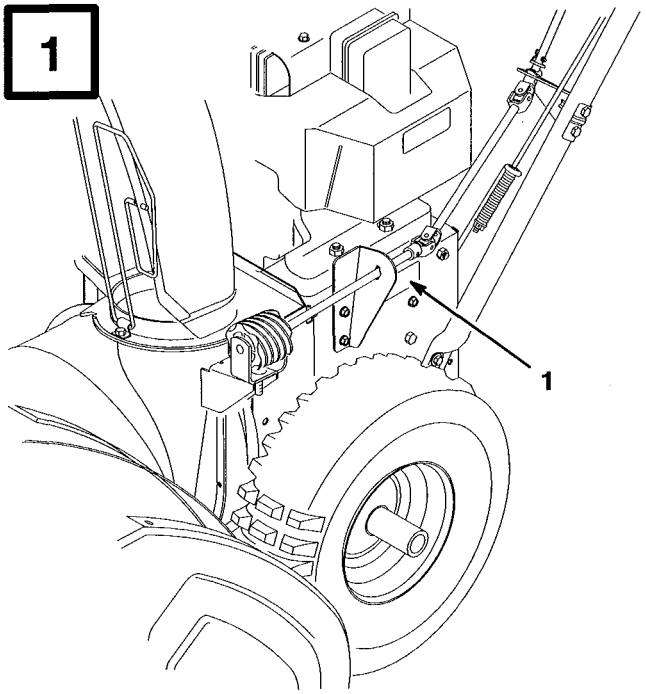

1. Model and serial number decal

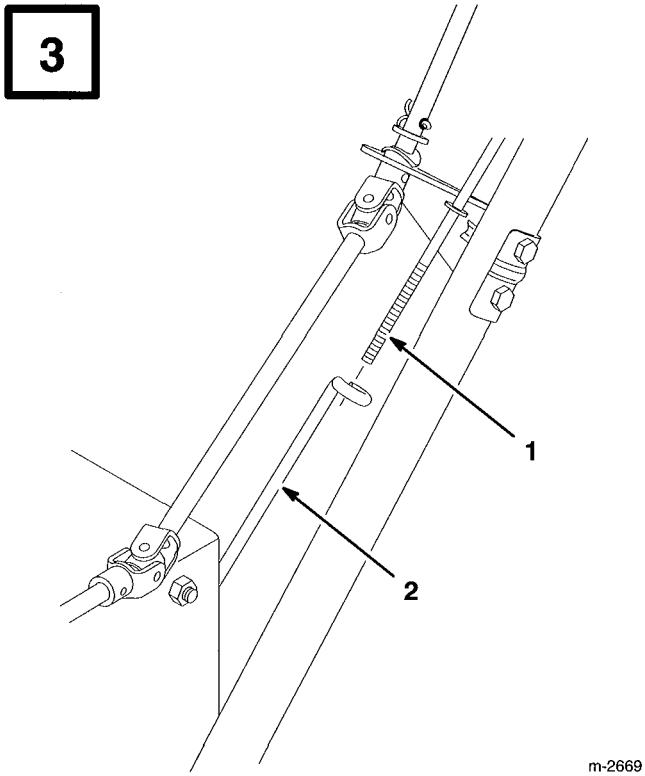

1. Traction rod
2. Lower traction rod

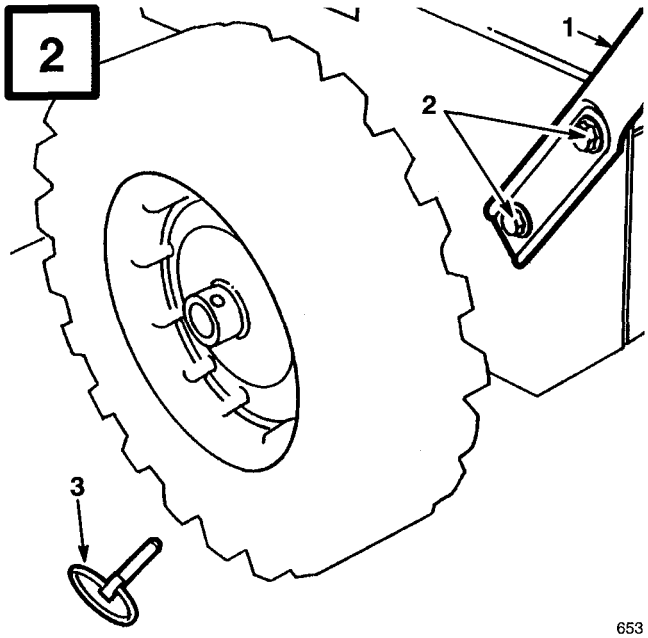

1. Handle
2. Capscrews and curved washers
3. Axle pin

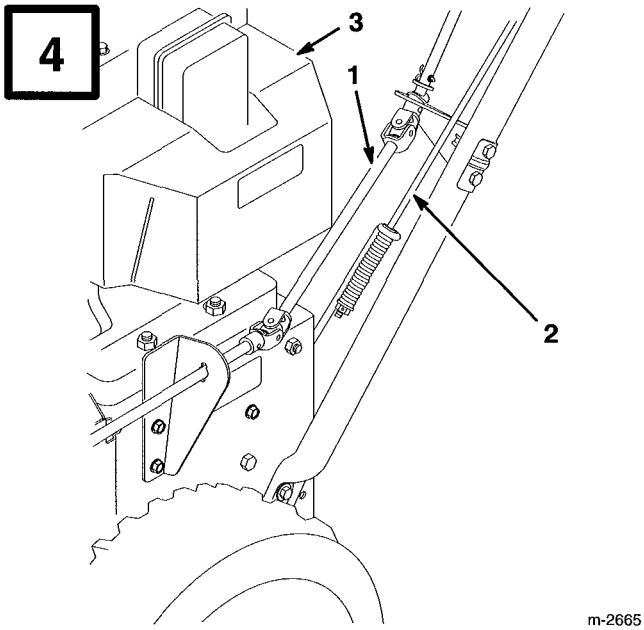

1. Chute control rod
2. Traction rod
3. Engine

©The Toro Company – 1996
All Rights Reserved

Printed in USA

5

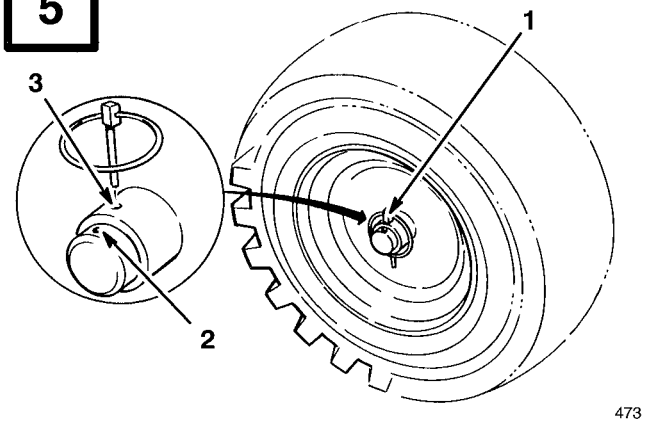

473

1. Axle pin
2. Outer axle hole
3. Inner axle hole and wheel hub

6

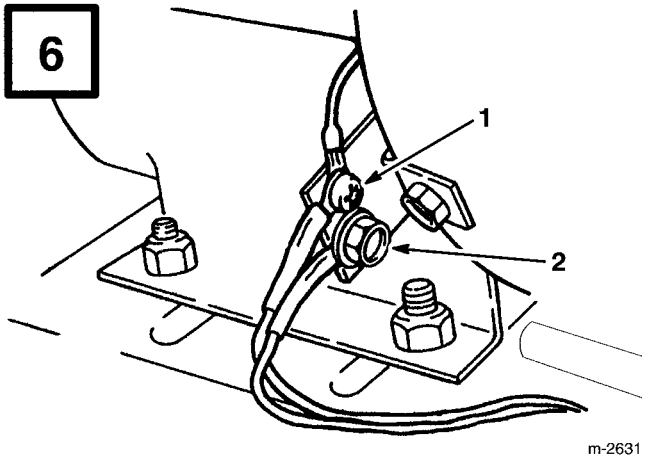

m-2631

1. Small wire connector and Phillips head screw
2. Flange head capscrew and large wire connector

7

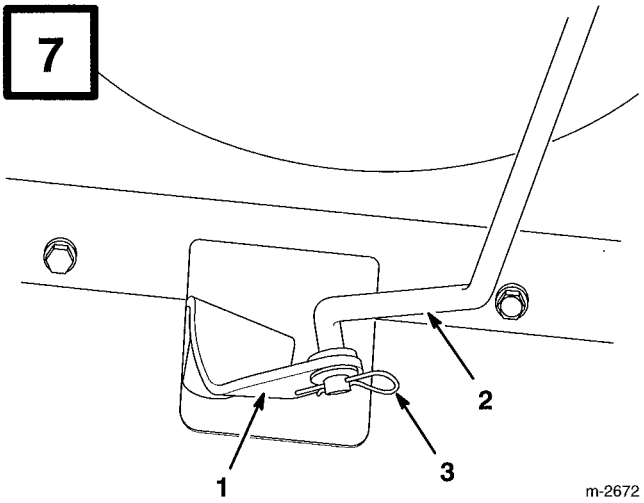

m-2672

1. Speed selector arm
2. Speed selector rod
3. Flat washer and cotter pin

8

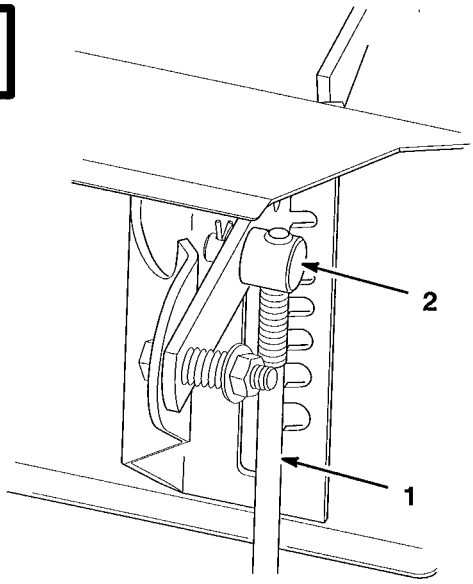

m-2670

1. Speed selector rod
2. Trunnion

9

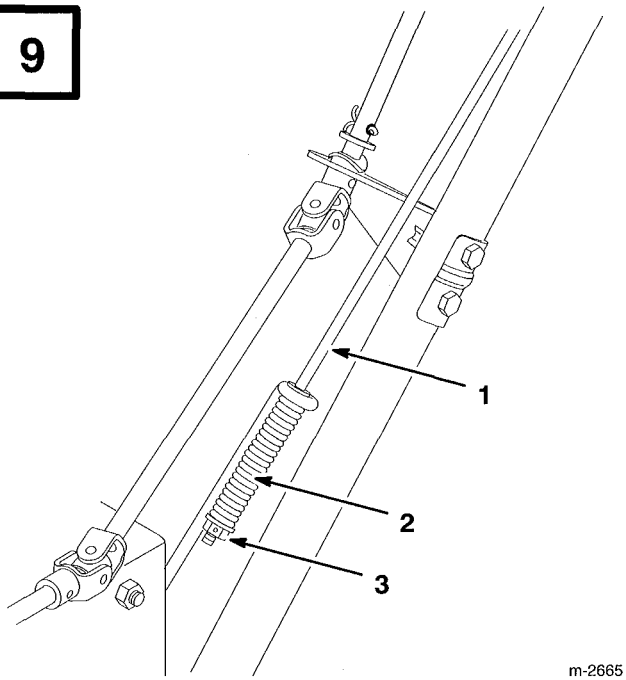

1. Traction control rod
2. *Spring*
3. Flange lock nut

11

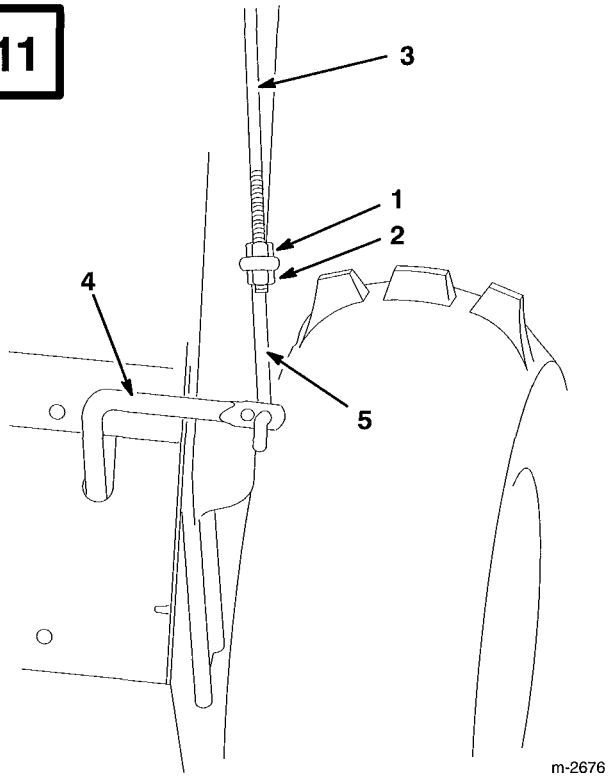

1. Hex flange nut
2. Flange lock nut
3. Upper control rod
4. Lower control rod
5. Lower link

10

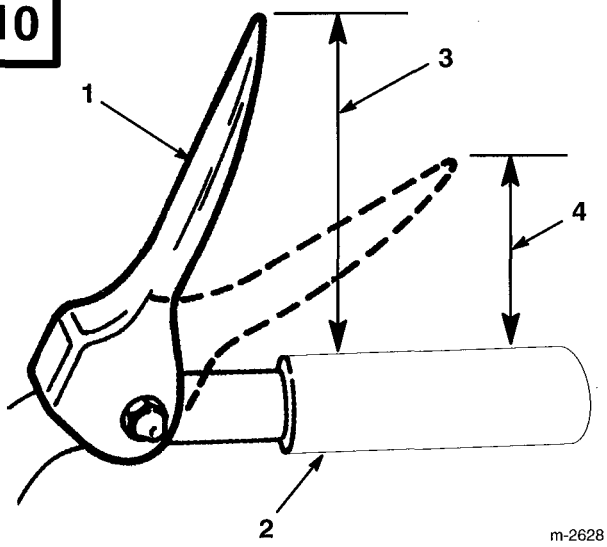

1. Traction control lever
2. Handgrip
3. Approximately 5 inches
4. Three to four inches

12

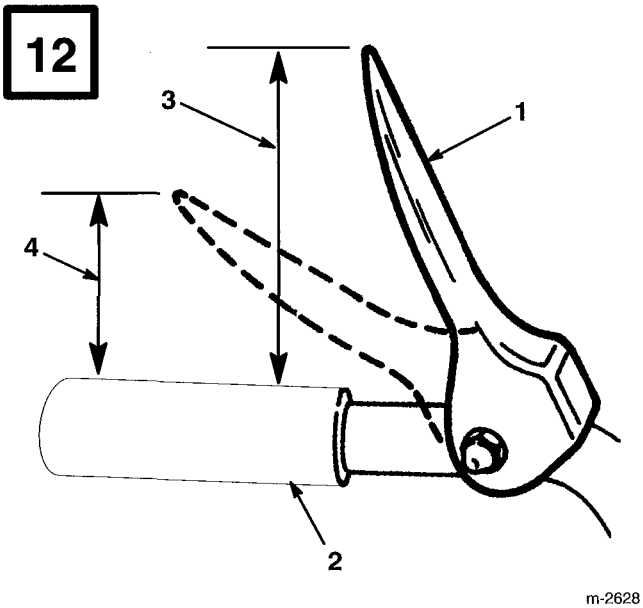

1. Auger/impeller control lever
2. Handgrip
3. Approximately four inches
4. Two inches

13

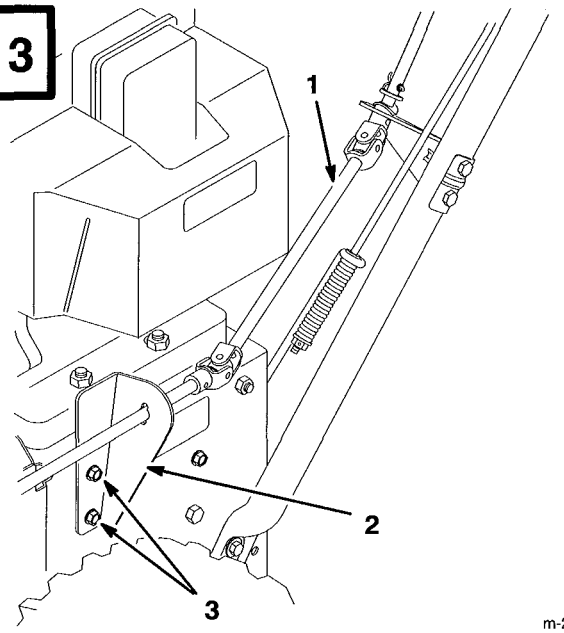

m-2665

1. Chute control rod
2. Chute control rod bracket
3. Screw (2)

14

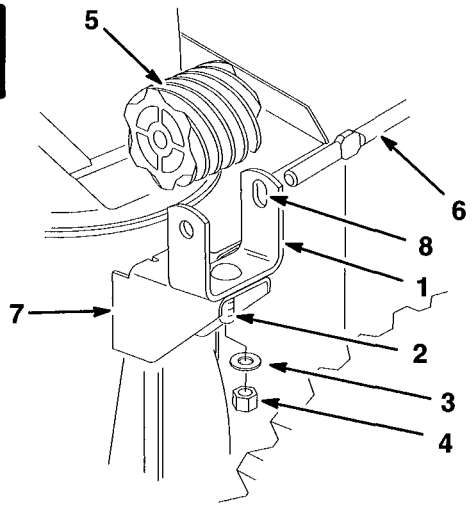

m-2666

1. Worm gear bracket
2. Carriage screw
3. Flat washer
4. Lock nut
5. Worm gear
6. Chute gear rod
7. Mounting flange
8. Slotted hole

15

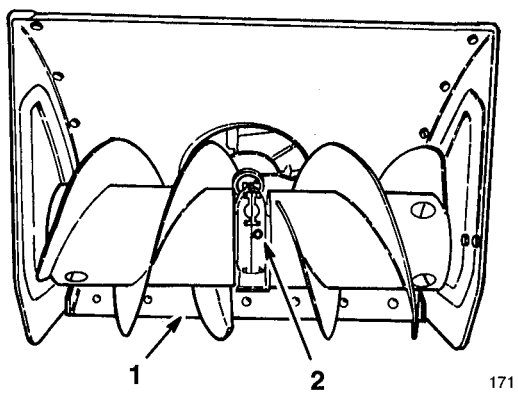

171

1. Scraper
2. Pipe plug

16

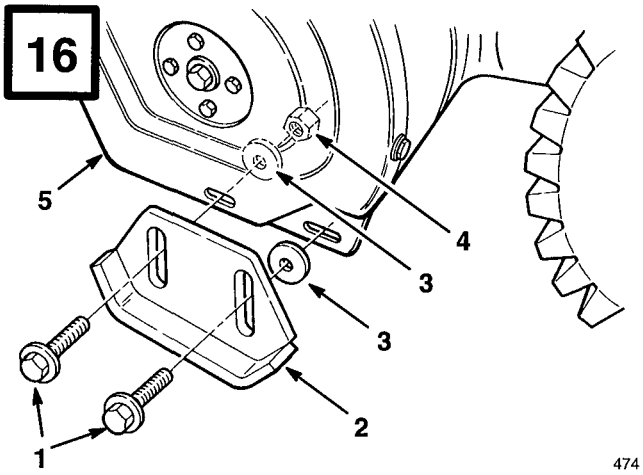

474

1. Flange bolt (2)
2. Skid
3. Flat washer (2)
4. Lock nut
5. Sideplate

17

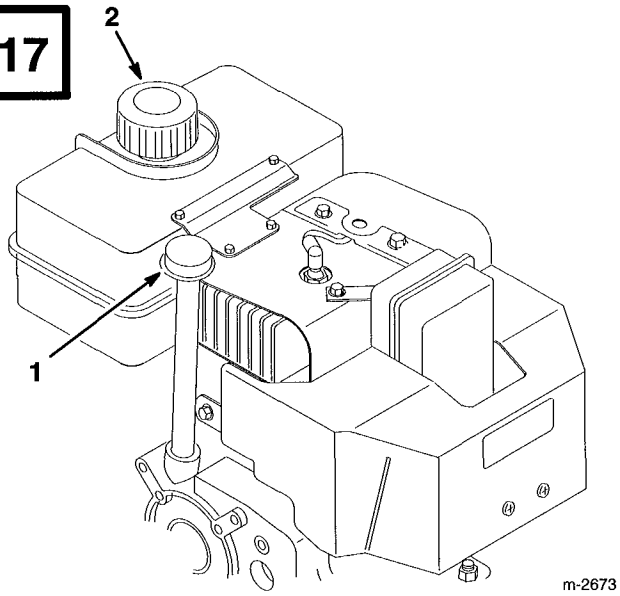

m-2673

1. Dipstick
2. Fuel tank cap

18

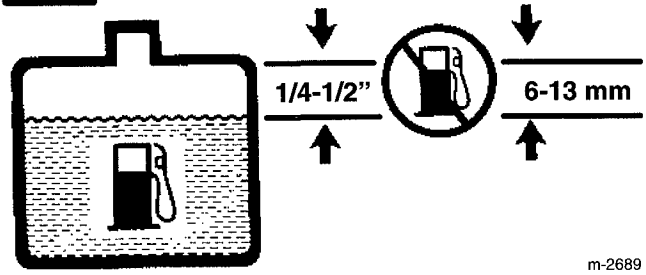

m-2689

19

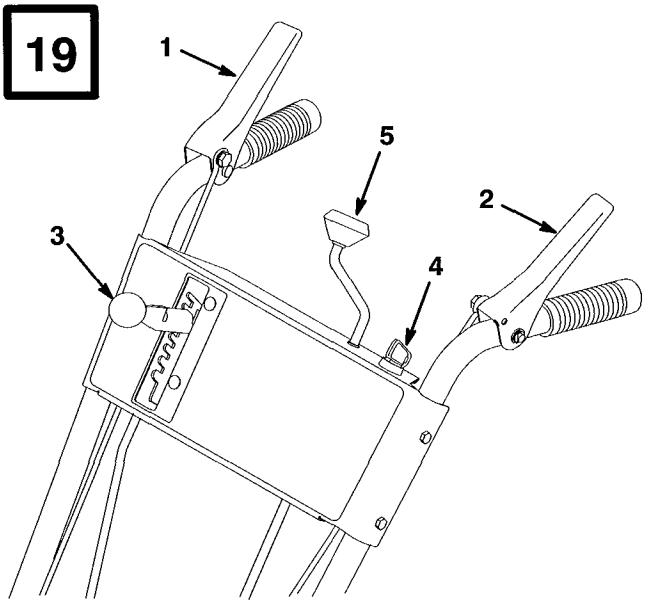

m-2668

1. Auger/impeller control lever
2. Traction control lever
3. Speed selector
4. Ignition switch
5. Discharge chute control

20

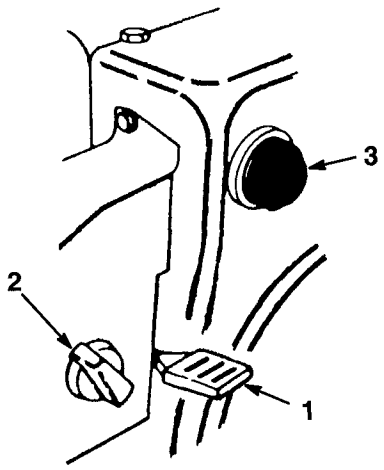

935

1. Throttle
2. Choke
3. Primer

21

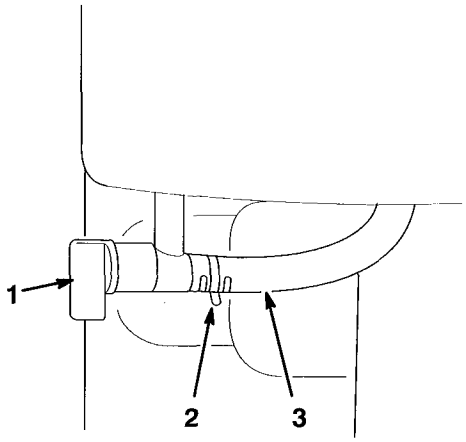

m-2236

1. Fuel shut–off valve
2. Hose clamp
3. Fuel line

22

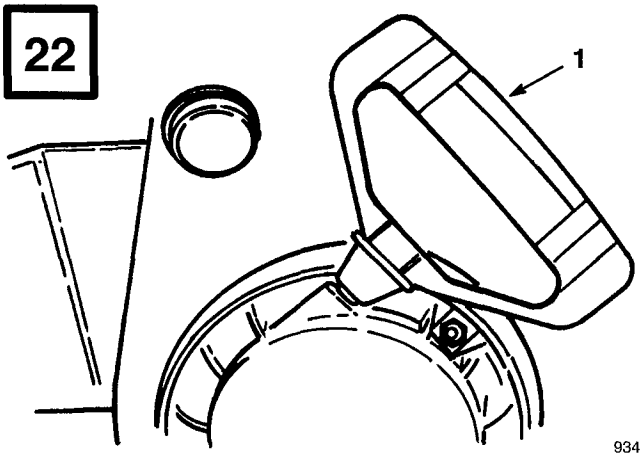

934

1. Recoil starter

23

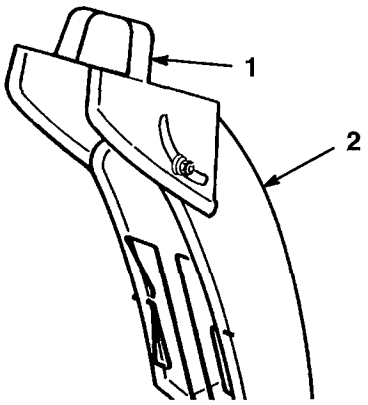

176

1. Chute deflector handle
2. Discharge chute

24

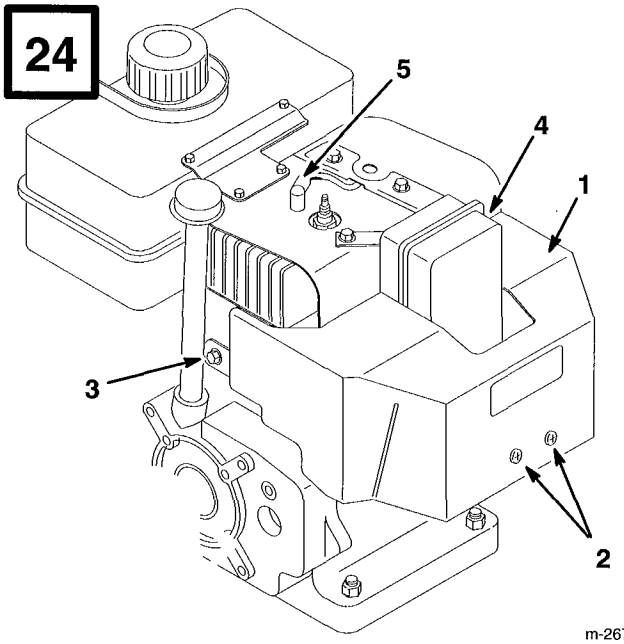

m-2675

1. Carburetor heater box
2. Phillips screw (2)
3. Hex head screw and lock washer
4. Hex head screw
5. Spark plug wire

25

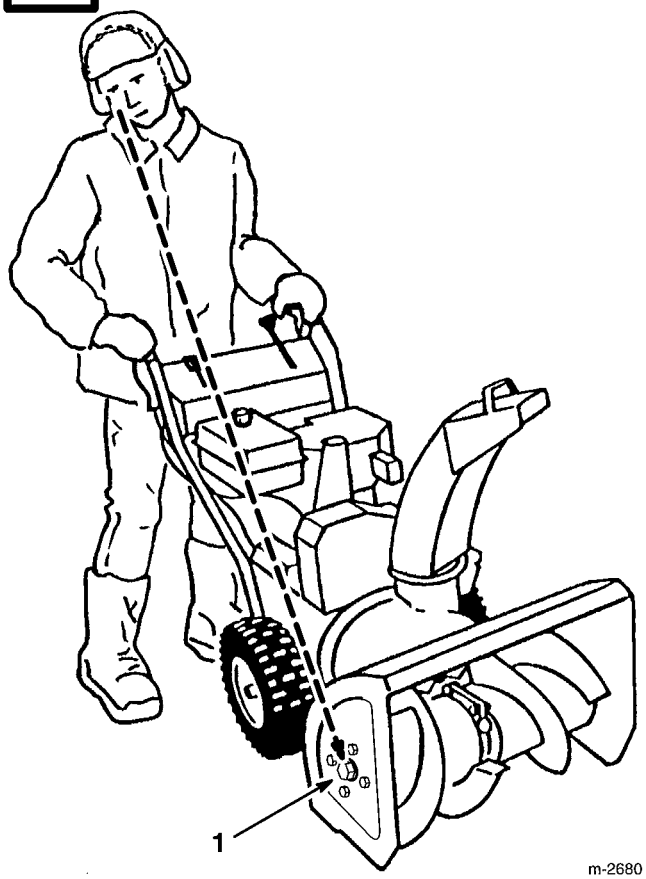

m-2680

1. Large screw head

26

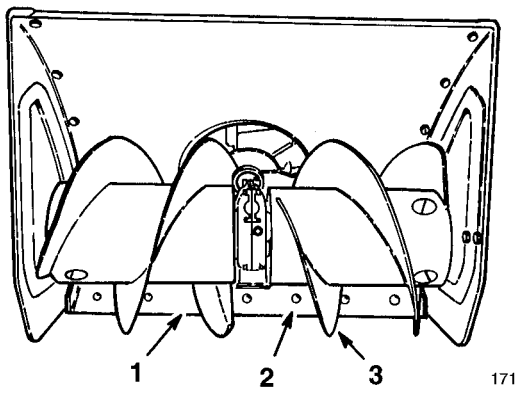

171

1. Scraper
2. Carriage screw
3. Auger blades

27

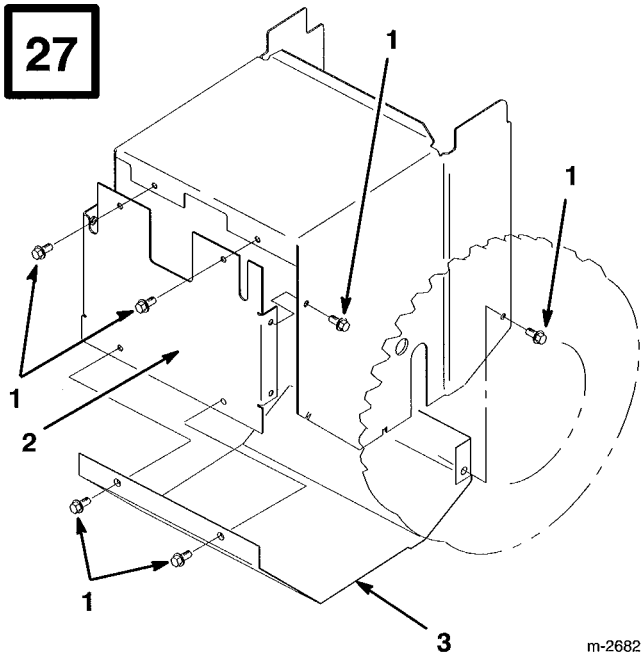

m-2682

1. Screw (8)
2. Back cover
3. Bottom cover

28

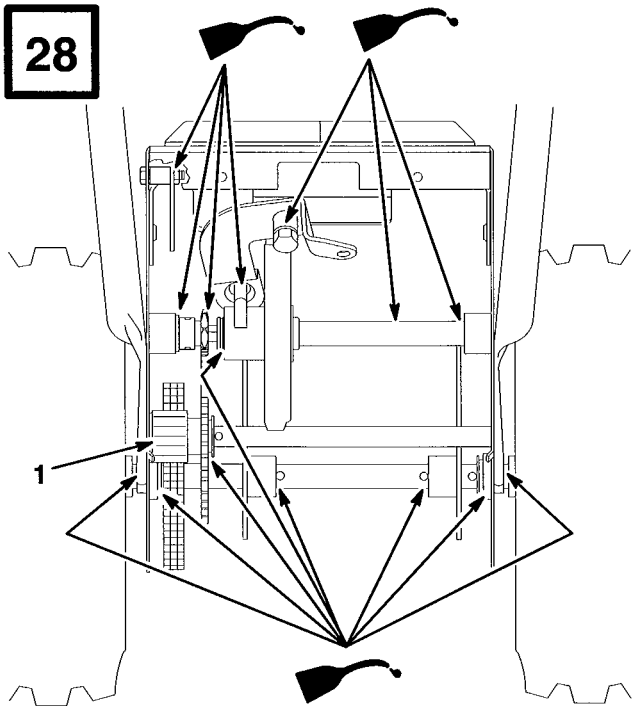

m-2679

1. Axle gear

29

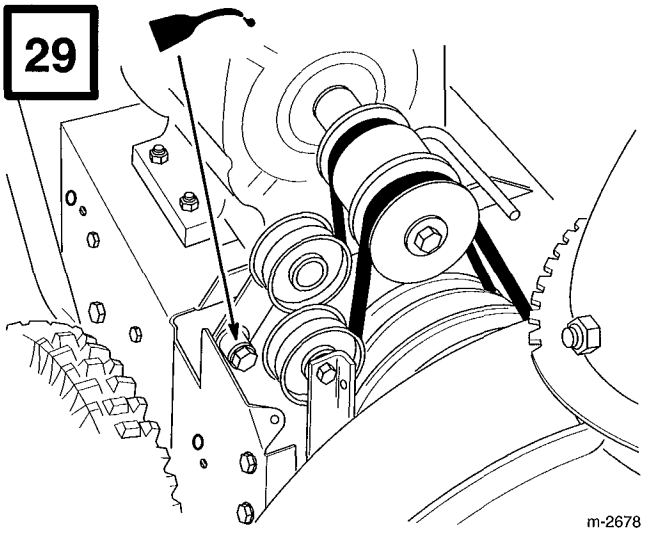

m-2678

30

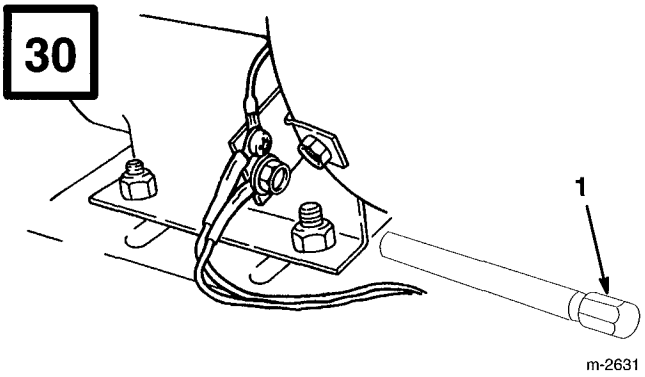

m-2631

1. Drain plug

31

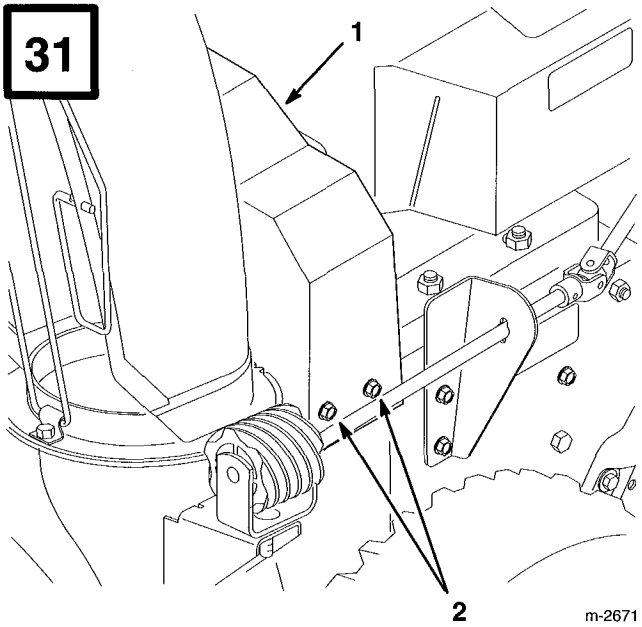

m-2671

1. Upper belt cover
2. Screw (3)

32

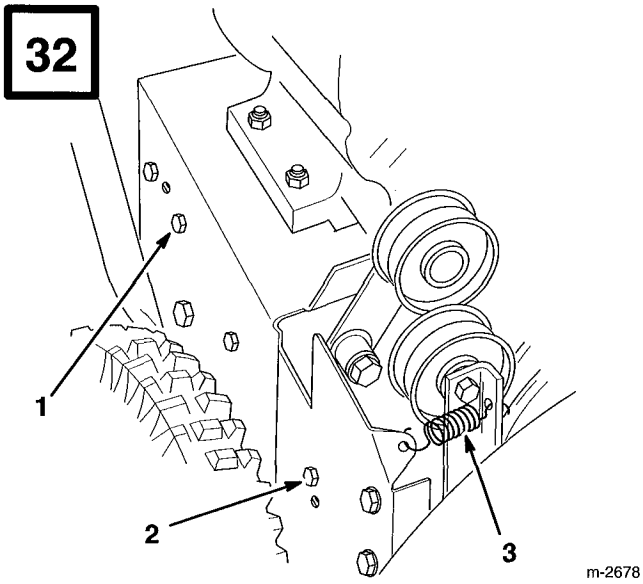

m-2678

1. Rear screw
2. Front screw
3. Idler pulley spring

33

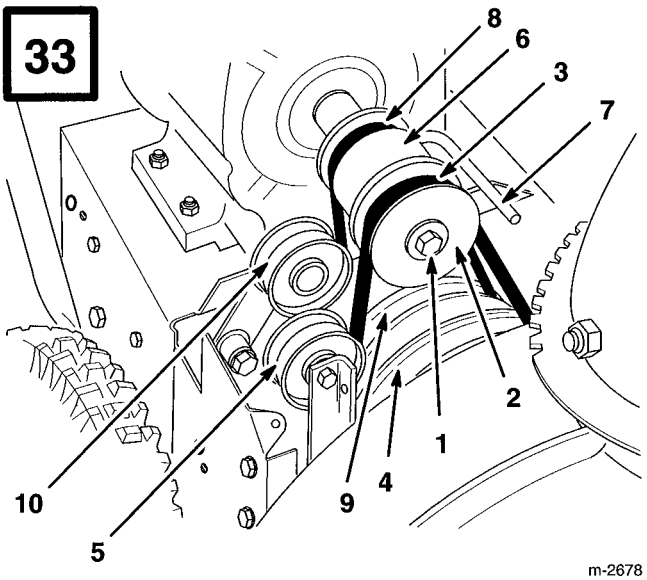

m-2678

1. Engine crankshaft screw, lock washer and washer
2. Engine pulley sheave
3. Auger/impeller drive belt
4. Large auger/impeller pulley
5. Idler pulley
6. Center engine pulley
7. Belt guide
8. Traction belt
9. Traction pulley
10. Traction idler pulley

34

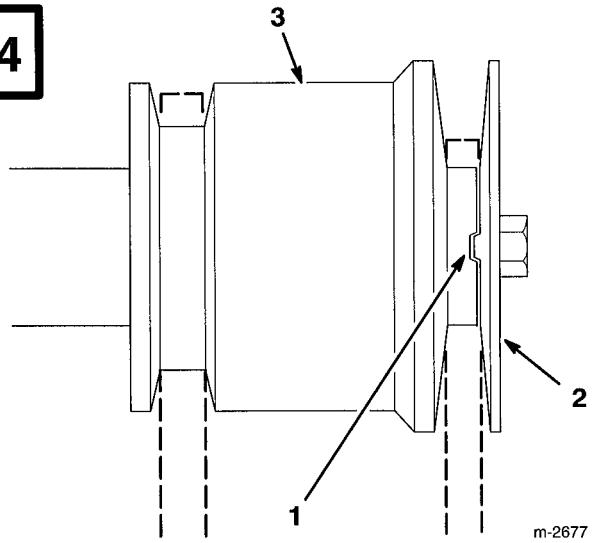

m-2677

1. Indexing rib in indexing notch
2. Engine pulley sheave
3. Center engine pulley

35

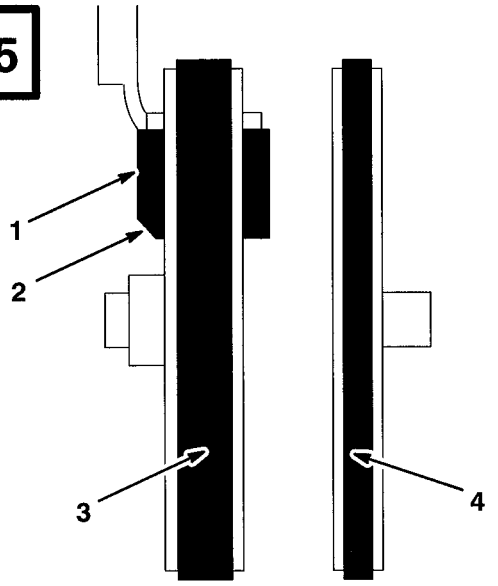

m-2681

View from left side of unit

1. Brake pad
2. Angled cut-off
3. Auger/impeller drive belt
4. Traction drive belt

36

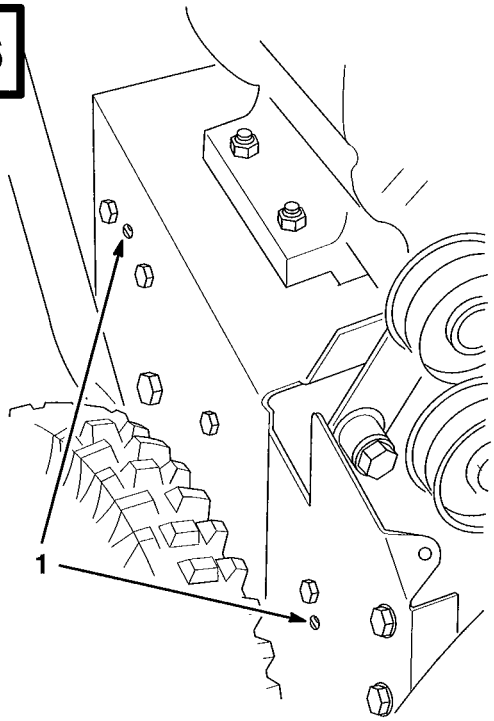

m-2678

1. Tabs in holes

37

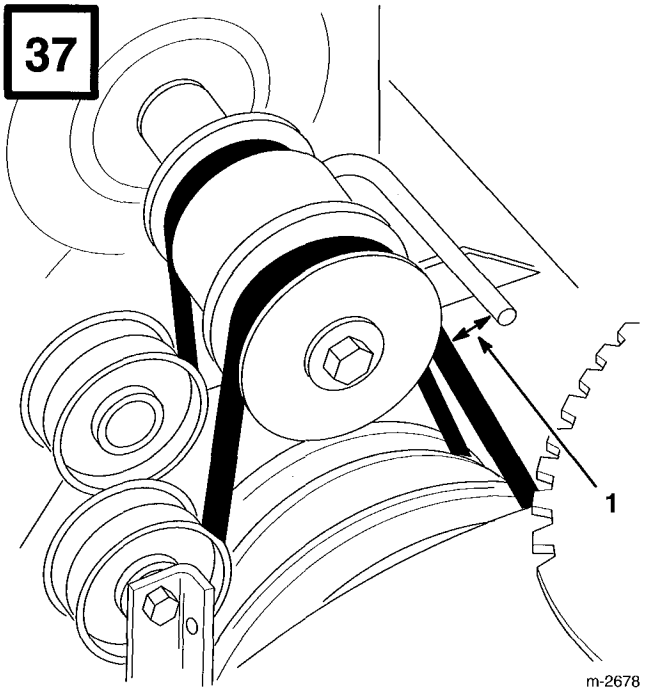

1. .03"-.06"

38

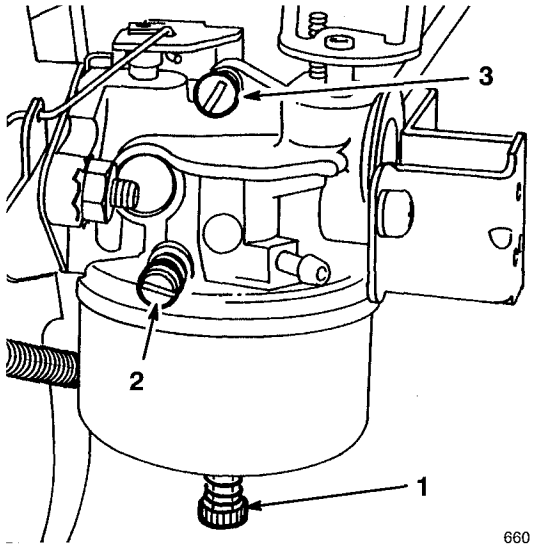

1. Power adjusting screw
2. Idle mixture screw
3. Idle speed screw

39

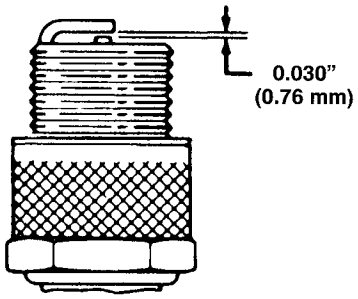

Contents

	Page
Introduction	1
Safety	2
Before Operating	2
While Operating	3
Maintaining Snowthrower	4
Safety Decals and Instructions	6
Loose Parts	7
Accessories	7
Assembly	8
Install Handle	8
Connect Ignition Wires	8
Install Speed Selector Rod	8
Install Traction Rod	8
Install Auger/Impeller Drive Control Linkage	9
Install Chute Control Gear	9
Check Tire Pressure	10
Install Skids	10
Check Auger Gear Box Oil	10
Before Starting	10
Fill Crankcase With Oil	10
Fill Fuel Tank With Gasoline	11
Operation	12
Controls	12
Starting/Stopping Engine	12
Free Wheeling Or Self–propelled Drive	14
Operating Tips	14
Adjusting Scraper	14
Adjusting Skids	15
Maintenance	16
Draining Gasoline	16
Lubricating Snowthrower	16
Changing Crankcase Oil	17
Auger Gear Box Oil	17
Adjusting Auger/Impeller Drive Belt	17
Replacing Auger/Impeller Drive Belt	18
Replacing Traction Drive Belt	18
Adjusting Traction Drive	19
Adjusting Speed Selector	19
Adjusting Carburetor	20
Replacing Spark Plug	21
Storage	21
Warranty	24

Introduction

Thank you for purchasing a Toro product.

All of us at Toro want you to be completely satisfied with your new product, so feel free to contact your local Authorized Service Dealer for help with service, genuine Toro parts, or other information you may require.

Whenever you contact your Authorized Service Dealer or the factory, always know the model and serial numbers of your product. These numbers will help the Service Dealer or Service Representative provide exact information about your specific product. You will find the model and serial number decal located in a unique place on the product (Fig. 1).

For your convenience, write the product model and serial numbers in the space below.

Model No: _____

Serial No. _____

Read this manual carefully to learn how to operate and maintain your product correctly. Reading this manual will help you and others avoid personal injury and damage to the product. Although Toro designs, produces and markets safe, state-of-the-art products, you are responsible for using the product properly and safely. You are also responsible for training persons who you allow to use the product about safe operation.

The Toro warning system in this manual identifies potential hazards and has special safety messages that help you and others avoid personal injury, even death. DANGER, WARNING and CAUTION are signal words used to identify the level of hazard. However, regardless of the hazard, be extremely careful.

DANGER signals an extreme hazard that will cause serious injury or death if the recommended precautions are not followed.

WARNING signals a hazard that may cause serious injury or death if the recommended precautions are not followed.

CAUTION signals a hazard that may cause minor or moderate injury if the recommended precautions are not followed.

Safety

To ensure maximum safety, best performance, and to gain knowledge of the product, it is essential that you or any other operator of the snowthrower read and understand the contents of this manual before the motor is ever started. Pay particular attention to the safety alert symbol ⚠ which means CAUTION, WARNING OR DANGER — "personal safety instruction." Read and understand the instruction because it has to do with safety. Failure to comply with instruction may result in personal injury.

This snowthrower is designed and tested to offer safe and effective service, provided it is operated in strict accordance with the following Safety Instructions. Failure to comply with the following instructions **MAY RESULT IN PERSONAL INJURY.**

Before Operating

1. Read and understand the contents of this manual before operating the snowthrower. Become familiar with all controls and know how to stop the engine quickly.
2. Keep everyone, especially children and pets, away from snowthrower and area of operation. Never allow children to operate the snowthrower. Adults should operate the snowthrower only after reading this manual.
3. Thoroughly inspect area thoroughly where snowthrower will be used. Remove doormats, sleds, boards, sticks, wire, and any other foreign objects which might be picked up and thrown by the snowthrower.
4. Keep all shields and safety devices in place. If a shield, safety device or decal is illegible, damaged or lost, repair or replace it before beginning operation. Also, tighten any loose nuts, bolts or screws.
5. Wear adequate winter clothing and rubber boots that will ensure proper footing on slippery surfaces. Do not wear loose fitting clothing that could possibly get caught in moving parts.
6. Always wear safety glasses or eye shields during operation or while performing an adjustment or repair to protect eyes from foreign objects that may be thrown from the machine.
7. Adjust both skids so auger housing clears gravel or crushed rock surfaces.
8. Before starting the engine, ensure auger drive control and traction (wheel drive) control are in disengaged position.
9. Use extension cords and receptacles
10. Always use a grounded, three wire plug and cord to start snowthrower equipped with an electric starter. Extension cord must be connected to a properly grounded outlet.
11. Fill fuel tank with gasoline before starting the engine. Avoid spilling any gasoline. Because gasoline is highly flammable, handle it carefully. **DO NOT SMOKE WHILE HANDLING GASOLINE.**

    A. Use an approved gasoline container.

B. Fill fuel tank outdoors, not indoors. **NEVER ADD FUEL TO AN ENGINE THAT IS RUNNING OR HOT.** Engine must be cool to reduce potential fire hazard.

C. Open doors if engine will be started in the garage because exhaust fumes are dangerous and could possibly be deadly. Do not run engine indoors.

D. Wipe up any spilled gasoline. Reinstall gasoline container cap and snowthrower fuel tank cap securely before starting the engine.

While Operating

12. **ROTATING IMPELLER OR AUGER CAN CUT OFF OR INJURE FINGERS OR HANDS. STAY BEHIND THE HANDLES AND AWAY FROM DISCHARGE OPENING WHILE OPERATING THE SNOWTHROWER. KEEP FACE, HANDS, FEET, AND ANY OTHER PART OF YOUR BODY OR CLOTHING AWAY FROM CONCEALED, MOVING OR ROTATING PARTS.**

13. **BEFORE ADJUSTING, CLEANING, REPAIRING, AND INSPECTING THE SNOWTHROWER, AND BEFORE UNCLOGGING THE DISCHARGE CHUTE, SHUT ENGINE OFF AND WAIT FOR ALL MOVING PARTS TO STOP. ALSO, PULL WIRE OFF SPARK PLUG AND KEEP WIRE AWAY FROM THE PLUG TO PREVENT ACCIDENTAL STARTING. USE A STICK, NOT YOUR HAND, TO REMOVE OBSTRUCTIONS FROM DISCHARGE CHUTE.**

14. Before leaving the operator's position—behind the handles—rotate ignition key to OFF and wait for all moving parts to stop. Remove key from switch if snowthrower will be left unattended.

15. Allow engine to warm up outdoors before clearing snow.

16. Operate the snowthrower only when there is good visibility or light. Always maintain secure footing and balance and keep a firm grip on the handles, especially when operating in reverse. Walk; never run.

17. Be attentive when using the snowthrower, and stay alert for holes in the terrain and other hidden hazards. Be careful when clearing snow from a gravel drive because stones could be picked up and thrown if skids are not adjusted so auger housing clears all rocks.

18. Do not make any adjustments while the engine is running, with the exception of carburetor adjustments.

19. Never direct discharge of snow or operate snowthrower near bystanders, glass enclosures, automobiles and trucks, window wells or a drop–off without proper adjustment of the snow chute and deflector angle.

20. Clear snow from slopes by going up and down, never across the face. Use caution when changing directions. Use lower gear when operating on slopes. Never clear snow from steep slopes.

21. Do not overload the snowthrower by clearing snow at too fast a rate.

22. Do not use snowthrower on a roof.

23. If a foreign object is hit or snowthrower vibrates abnormally, stop engine by turning key to OFF and wait for all moving parts to stop. Pull wire off spark plug and check snowthrower immediately for possible damage, an obstruction or loose parts. Vibration is generally a sign of trouble. Repair any damage before starting engine and operating snowthrower again.

24. Do not touch engine while it is running or soon after it is stopped because the engine will be hot enough to cause a burn. Do not add oil or check oil level in crankcase when engine is running.

25. Never operate snowthrower at high transport speeds on slippery surfaces. Use care when backing.

26. Disengage power to the collector/impeller when snowthrower is transported or not in use.

Maintaining Snowthrower

27. Perform only those maintenance instructions described in this manual. Shut engine off before performing any maintenance service or adjustment. Additionally, pull wire off spark plug and keep wire away from plug to prevent accidental starting. If major repairs are ever needed, contact your local Authorized TORO Service Dealer for assistance.

28. Keep snowthrower in safe operating condition by keeping nuts, bolts, and screws tight. Check engine mounting bolts frequently to assure they are tight.

29. Maintain or replace safety and instruction labels, as necessary.

30. Do not overspeed the engine by changing governor settings. Recommended maximum engine speed is 3450 rpm. To assure safety and accuracy, check maximum engine speed (3450 rpm) with a tachometer.

31. Run the machine a few minutes after throwing snow to prevent freeze-up of the collector/impeller.

32. Allow engine to cool before storing in an enclosure such as a garage or storage shed. **NEVER STORE SNOWTHROWER IN HOUSE (LIVING AREA) OR BASEMENT BECAUSE GASOLINE AND FUMES ARE HIGHLY FLAMMABLE, EXPLOSIVE, AND DANGEROUS IF INHALED.** Do not store snowthrower near any open flame or where gasoline fumes may be ignited by a spark.

33. When storing the snowthrower for an extended time—off season storage or 30 days—drain gasoline from fuel tank to prevent a potential hazard. Store gasoline in a safety–approved fuel container. Remove key from ignition switch when storing snowthrower. Store key in a memorable place.

34. At the time of manufacture, the snowthrower conformed with or exceeded OPEI safety standards in effect for snowthrowers. Therefore, to ensure best performance and safety, purchase genuine TORO replacement parts and accessories to keep the TORO all TORO. **NEVER USE "WILL FIT" REPLACEMENT PARTS AND ACCESSORIES.**

35. For safety reasons, use only those accessories and attachments recommended by The TORO Company to ensure continued safety certification of the product. Using unapproved accessories and attachments could contribute to a potential hazard.

BEFORE OPERATING

Read and understand the contents of this manual before operating the snowthrower. Become familiar with all controls and know how to stop the engine quickly.



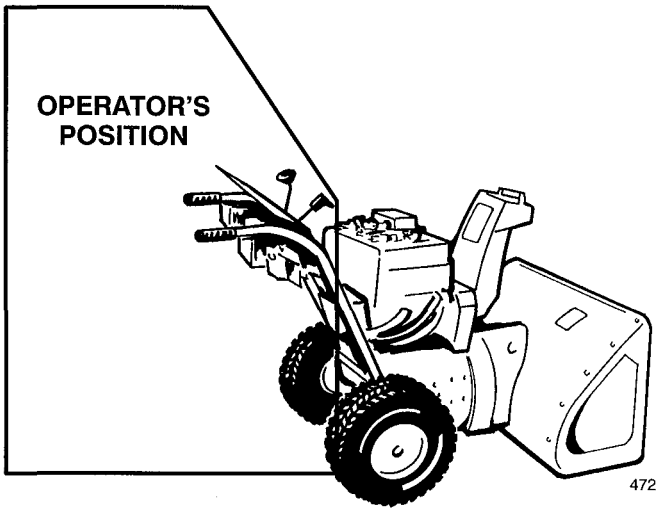

CAUTION: IMPROPER USE MAY RESULT IN LOSS OF FINGERS, HANDS OR FEET.



HIGH SPEED IMPELLER WITHIN 2 INCHES OF OPENING

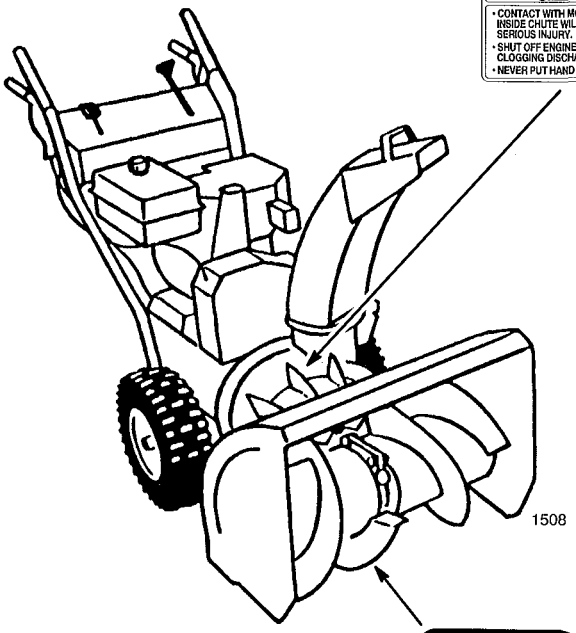



LOW SPEED AUGER HAS MOVING PINCH POINT, CLOSE TO OPENING.

Safety Decals and Instructions

Safety decals and instructions are easily visible to the operator and are located near any area of potential danger. Replace any decal that is damaged or lost.



ON CONTROL PANEL
(Part No. 93–8033)

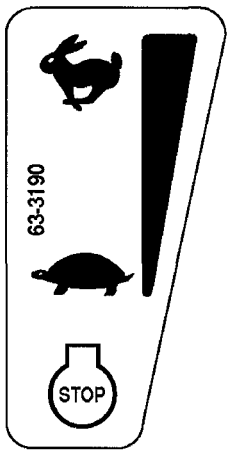

ALONGSIDE
THROTTLE
(Part No. 63–3190)



ON AUGER HOUSING
(Part No. 53–76 70)

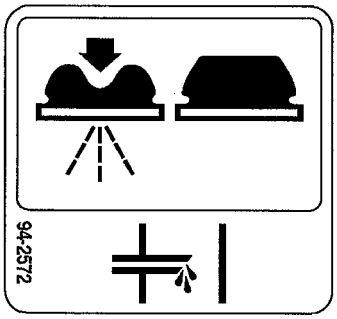

NEXT TO PRIMER
(Part No. 94–2572)



ON ENGINE
(Part No. 66–6840)

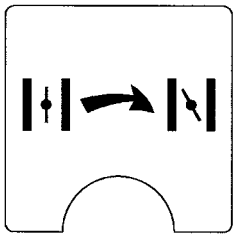

ON ENGINE
(Part No. 63-2410)



ON DISCHARGE CHUTE
(Part No. 94–8079)

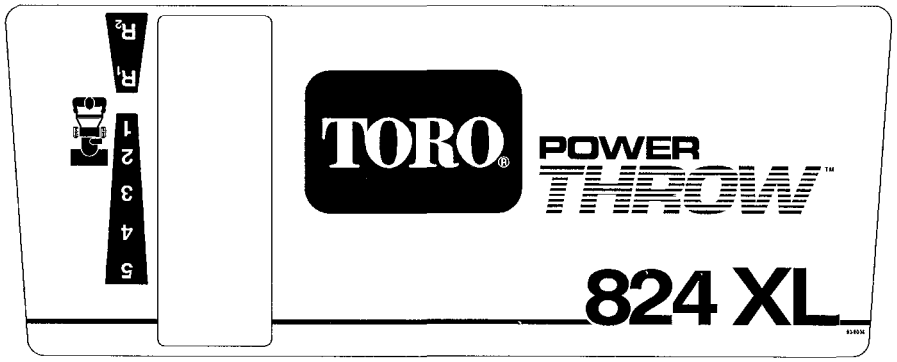

ON CONTROL PANEL
(Part No. 93–8034)

Loose Parts

Part	Qty	Use
Cotter Pin	1	Install Speed Selector Rod
Flat Washer	1	
Capscrews & Curved Washers	4	Install Handle
Lower Link	1	Install Auger & Traction Drive Control Rod
Hex Flange Nut	1	
Flange Lock Nut	2	
Compression Spring	1	
Worm Gear	1	Install Chute Control Rod
Bracket	1	
Carriage Screw	1	
Flat Washer	1	
Lock Nut	1	
Flange Head Capscrew	1	Connect Wires
Skid	2	Install Skids
Flange Head Screw 5/16-18 x 3/4 lg.	2	
Flat Washer	2	
Lock Nut	2	
Key	1	Use in Ignition Switch
Registration Card	1	Used to Validate Product Warranty
Operator's Manual	1	Operator Instructions

Specifications and design subject to change without notice.

Accessories

Description	Part Number
110 Vac Electric Starter Kit	38039
Tire Chain Kit	56–2700
Drift Breaker Kit	37–7020
Cab Kit	95–2650

Assembly

Note: Determine left and right sides of snowthrower by standing in the normal operating position.

Install Handle

1. Remove tie straps securing control rods to handle.
2. Remove the axle pins from both wheels (Fig. 2) and slide the wheels outward on the axle approximately one inch to make clearance for assembly of handles.
3. Hold handles in installation position and insert traction rod through loop in lower traction rod (Fig. 3).

   IMPORTANT: Make sure chute control rod assembly is between engine and traction rod (Fig. 4).
4. Position left handle against side of unit, align handle mount holes with holes in side plate, and secure with two capscrews and curved washers until finger tight (Fig. 2).

   Note: Concave side of curved washer goes against outside of handle.

   Repeat procedure on right side. Make sure handles are at same height before tightening handle screws on both sides of unit.
5. Reinstall the wheels. Note that there are two holes in each end of the axle. Axle pins are installed through holes in the wheel hub and through inner hole of axle (Fig. 5).

   Note: If snowthrower is to be equipped with optional tire chains, wheels must be pinned through outer axle holes.

Connect Ignition Wires

1. Remove Phillips head screw from engine bracket, install wire with smaller connector and reassemble to engine bracket (Fig. 6).
2. Insert flange head capscrew through large connector on remaining wire and install in lower hole in engine bracket (Fig. 6). Make sure wire connectors do not touch each other after tightening.

Install Speed Selector Rod

1. Pull speed selector arm (Fig. 7) to the fully "out" position and move speed selector (Fig. 19) on control panel to the R_2 (REVERSE) position to ease assembly.
2. Rotate speed selector rod in trunnion (Fig. 8) until bottom end of rod can be slipped into hole in speed selector arm (Fig. 7).
3. Install speed selector rod into selector arm, add one flat washer on the rod and secure with cotter pin (Fig. 7).

   Note: If speed selector will not move into fifth gear, an adjustment is necessary: refer to Adjusting Speed Selector, page 19.

   If unit speed does not meet your preference once you have started unit, additional adjustment of the speed selector is needed. Refer to Adjusting Speed Selector, page 19.

Install Traction Rod

1. Slide spring onto bottom of traction control rod (Fig. 9).
2. Thread a flange lock nut (flange side up) onto bottom of traction control rod below spring (Fig. 9).

3. Adjust flange lock nut up or down on traction control rod until the distance between the top of the handgrip and the bottom of the traction control lever (Fig. 19) is approximately five inches (Fig. 10). **This is a preliminary setting only.**

4. Move speed selector (Fig. 19) into fifth gear.

5. Slowly pull machine backward while slowly depressing traction control lever toward handle. Adjustment is correct when wheels stop turning and the distance between the top of the handgrip and the bottom of the traction control lever is three to four inches (Fig. 10). Readjust flange lock nut, if necessary, to obtain this dimension and then tighten flange lock nut securely.

Install Auger/Impeller Drive Control Linkage

1. Thread a hex flange nut (flange side down) onto upper control rod located on right handle (Fig. 11).

2. Install lower link through outer hole in lower control rod (Fig. 11).

3. Insert upper control rod through loop in lower link control rod (Fig. 11).

4. Thread a flange lock nut (flange side up) onto bottom of upper control rod below loop in lower link (Fig. 11).

5. Check the distance between the top of the handgrip and the bottom of the auger/impeller control lever (Fig. 19). Distance should be approximately four inches (Fig. 12). **This is a preliminary setting only.**

6. Compress auger/impeller control lever slowly toward handgrip. The amount of force to compress the lever will increase noticeably when slack is removed from the drive belt (approximately one-half of lever movement). Adjustment is correct when the force begins to increase and the distance between the top of the handgrip and the bottom of the auger/impeller control lever is two inches.

   Note: If force does not noticeably increase, remove the belt cover (refer to Replacing Auger/ Impeller Drive Belt, steps 1-2, page 18) and measure the one to two inch dimension above the handgrip at the point where the slack is removed from the auger drive belt.

7. Readjust the two nuts, if necessary, to obtain this dimension then tighten the two nuts securely (Fig. 11).

Install Chute Control Gear

1. Remove (2) screws from chute control rod bracket on left side of frame, remove bracket, insert chute control rod through hole in bracket and reinstall bracket with two screws (Fig. 13).

2. Insert carriage screw into worm gear bracket mounting hole (Fig. 14).

3. Position worm gear into bracket, align slotted holes in worm gear and bracket and insert chute gear rod through slotted holes in bracket and gear (Fig. 14).

4. Loosely mount worm gear and bracket to mounting flange with carriage screw, flat washer and lock nut (Fig. 14).

5. Slide worm gear into teeth of chute gear and tighten lock nut.

6. Check operation of discharge chute control (Fig. 19). Move worm gear slightly outward if binding is evident.

Check Tire Pressure

IMPORTANT: Check pressure of tires because they are over-inflated at the factory for shipping. Therefore, before the snowthrower is operated, reduce pressure in both tires to 7-15 psi equally.

Install Skids

1. Check tire pressure; refer to Check Tire Pressure, page 10.
2. Move the snowthrower onto a flat surface and check if scraper (Fig. 15) is parallel to the ground. If not, adjust scraper; refer to Adjusting Scraper, page 14.
3. Remove (2) flange bolts and flat washers securing ends of scraper to side plates (Fig. 16). Reinstall bolts through rear slots in skids. Assemble both skids so that washers are between skids and sideplates (Fig. 16). Do not tighten bolts.
4. Install (2) flange bolts through front slots in skids and through sideplates. Install flat washers and lock nuts on inside of sideplates. Do not tighten bolts.

   Note: The following steps adjust the skids for paved surfaces. For gravel or crushed rock surfaces, refer to Adjusting Skids, page 15.

5. Support the scraper to be 1/8 inch above a level surface if the snowthrower is to be used on smooth pavement.

   Note: The scraper should be higher than 1/8 inch above the pavement if the pavement surfaces are cracked, rough or uneven.

6. Move the skids down to sit flat on the ground and tighten the (4) flange bolts securing both skids to the auger side plates.

Check Auger Gear Box Oil

1. Move snowthrower to a level surface.
2. Clean area around pipe plug so dirt is removed.
3. Remove pipe plug from gear box (Fig. 15).
4. Check oil level in gear box. Oil must be at point of overflowing in filler opening.
5. If level of oil is low, add GL–5 or GL–6 SAE 85–95 EP transmission oil to the gear box until point of overflow.

   Note: Do not use synthetic gear oil.

6. Reinstall pipe plug in gear box.

Before Starting

Fill Crankcase With Oil

The engine is shipped from the factory without oil in the crankcase. Therefore, before starting the engine, oil must be added to the crankcase.

IMPORTANT: Check level of oil every 5 operating hours or each time unit is used. Initially, change oil after the first 2 hours of operation; thereafter, under normal conditions, change oil after every 25 hours of operation or annually, whichever comes first.

1. Move unit to a level surface to ensure an accurate oil level reading.
2. Clean area around dipstick to prevent foreign matter from entering filler hole when dipstick is removed (Fig. 17).
3. Remove dipstick from crankcase.
4. Slowly pour 26 ounces of SAE 5W–30 or SAE 10 oil into the filler hole. The engine uses any high–quality detergent oil having the American Petroleum Institute (API) "service classification"—SF, SG or SH.

Note: Dipstick must be fully installed to ensure accurate gauging of oil level. DO NOT OVERFILL. POUR OIL SLOWLY.

Fill Fuel Tank With Gasoline

⚠ DANGER

POTENTIAL HAZARD

- **In certain conditions gasoline is extremely flammable and highly explosive.**

WHAT CAN HAPPEN

- **A fire or explosion from gasoline can burn you, others, and cause property damage.**

HOW TO AVOID THE HAZARD

- **Use a funnel and fill the fuel tank outdoors, in an open area, when the engine is cold. Wipe up any gasoline that spills.**
- **Do not fill the fuel tank completely full. Add gasoline to the fuel tank until the level is 1/4" to 1/2" (6 mm to 13 mm) below the bottom of the filler neck. This empty space in the tank allows gasoline to expand.**
- **Never smoke when handling gasoline, and stay away from an open flame or where gasoline fumes may be ignited by a spark.**
- **Store gasoline in an approved container and keep it out of the reach of children.**
- **Never buy more than a 30-day supply of gasoline.**

Use clean, fresh lead-free gasoline, including *oxygenated* or *reformulated* gasoline, with an octane rating of 85 or higher. To ensure freshness, purchase only the quantity of gasoline that can be used in 30 days. Use of lead-free gasoline results in fewer combustion chamber deposits and longer spark plug life. Use of premium grade fuel is not necessary or recommended.

IMPORTANT: NEVER USE METHANOL, GASOLINE CONTAINING METHANOL, GASOHOL CONTAINING MORE THAN 10% ETHANOL, PREMIUM GASOLINE OR WHITE GAS BECAUSE ENGINE FUEL SYSTEM DAMAGE COULD RESULT.

Toro also recommends that Toro Stabilizer/ Conditioner be used regularly in all Toro gasoline powered products during operation and storage seasons. Toro Stabilizer/Conditioner cleans the engine during operation and prevents gum–like varnish deposits from forming in the engine during periods of storage.

DO NOT USE FUEL ADDITIVES OTHER THAN THOSE MANUFACTURED FOR FUEL STABILIZATION DURING STORAGE SUCH AS TORO'S STABILIZER/CONDITIONER OR A SIMILAR PRODUCT. TORO'S STABILIZER/CONDITIONER IS A PETROLEUM DISTILLATE BASED CONDITIONER/STABILIZER. TORO DOES NOT RECOMMEND STABILIZERS WITH AN ALCOHOL BASE SUCH AS ETHANOL, METHANOL OR ISOPROPYL. ADDITIVES SHOULD NOT BE USED TO TRY TO ENHANCE THE POWER OR PERFORMANCE OF MACHINE.

1. Clean area around the fuel tank cap (Fig. 17). Remove cap from fuel tank.
2. Using unleaded, regular gasoline, fill tank to within 1/4" to 1/2" (6 to 13 mm) from the top of the tank, not into the filler neck (Fig. 18). This space is for expansion of fuel. Do not fill tank full. Fuel tank capacity is 4 quarts.
3. Wipe up any spilled gasoline.
4. Reinstall fuel tank cap.

Operation

Controls

Auger/Impeller Control Lever (Fig. 19)—Control has two positions: ENGAGE and DISENGAGE. To engage both auger and impeller, compress lever against right handgrip. To disengage, release lever.

Traction Control Lever (Fig. 19)—To engage traction (wheel drive), lever must be compressed against left handgrip. To stop traction, release lever.

Speed Selector (Fig. 19)—The selector has five speeds forward and two reverse speeds. To select speeds, move speed selector to desired position.

Note: Before shifting gears into or out of reverse, the traction control lever must be released. On–the–go shifting may be accomplished between any of the **FORWARD** speeds without releasing the traction control lever.

Ignition Switch (Fig. 19)—Switch has two positions: ON and OFF (STOP). Rotate key to ON position before starting engine with the recoil starter. To stop engine, rotate key to OFF (STOP).

Discharge Chute Control (Fig. 19)—Rotate discharge chute control clockwise to move discharge chute to the right and counterclockwise to move chute to the left.

Throttle (Fig. 20)—Moving throttle upward increases engine speed and downward decreases engine speed. Moving throttle completely downward stops the engine.

Choke (Fig. 20)—Rotate choke to ON choke position to start a cold engine. As engine warms up, move choke gradually to OFF.

Primer (Fig. 20)—Press primer to pump a small amount of gasoline into engine for improved cold weather starting.

Fuel Shut–Off Valve (Fig. 21)—Valve is located under fuel tank. Close valve to stop fuel flow from fuel tank and open valve to allow fuel to flow to the carburetor. Close valve when snowthrower is not in use.

Recoil Starter (Fig. 22)—Recoil starter is on back side of engine. Pull recoil starter to start engine.

Chute Deflector Handle (Fig. 23)—Deflector handle is on top of discharge chute, and it is used to control height of the snow stream.

Starting/Stopping Engine

If engine is operated when temperature is +40°F (4°C) or higher, remove carburetor heater box (Fig. 24). However, the heater box must be reinstalled when temperature falls below +40°F (4°C). To remove heater box:

1. Pull wire off spark plug and make sure wire does not contact plug accidentally (Fig. 24).
2. Remove (2) Phillips screws, (2) hex head screws and (1) lock washer securing heater box in place (Fig. 24). Pull choke knob off choke rod (Fig. 20).
3. Lift heater box up and away from the engine, and reinstall choke knob on mounting pin.

Starting

IMPORTANT: Make sure auger, impeller, and discharge chute contain no obstructions before operating unit. USE A STICK, NOT YOUR HAND, TO REMOVE ANY OBSTRUCTIONS.

1. Place spark plug wire on spark plug (Fig. 24).
2. Move throttle (Fig. 20) to FAST position.
3. Ensure that auger/impeller control lever and traction control lever are in disengaged position (Fig. 19).

4. Open fuel shut–off valve below fuel tank (Fig. 21).

5. Rotate choke (Fig. 20) to ON position.

6. Rotate ignition key (Fig. 19) to ON position.

7. Cover hole in center of primer (Fig. 20) with thumb and push primer slowly three times. **DO NOT PRIME IF THE ENGINE HAS BEEN RUNNING AND IS HOT.**

   Note: Excessive priming may cause flooding of engine and failure to start.

8. Grasp recoil starter handle (Fig. 22) and pull it out slowly until positive engagement results; then pull vigorously to start the engine. Keep firm grip on starter handle and return the rope slowly.

   Note: If engine does not start or if temperature is –10°F (–23°C) or below, additional priming may be required. After each additional prime, try to start the engine before priming again.

9. After engine starts, immediately rotate choke (Fig. 20) to 3/4 position. As engine warms up, rotate choke to 1/2 position; then to OFF position. If engine falters, return choke to 1/2 position. When engine warms sufficiently, rotate choke to OFF position.

10. Move speed selector (Fig. 19) to first gear, squeeze traction control lever to handgrip, and then release the traction control lever. If the unit moves forward (walks) before engaging traction control lever or after releasing lever, see Adjusting Traction Drive, page 19.

11. Make sure that auger and impeller are not rotating when auger/impeller control lever is disengaged. While standing in the operator position behind the handles, look around to the side of the auger housing (Fig. 25). If the auger and impeller are rotating, a large screw head on the side of the auger housing will be rotating (Fig. 25). **If the auger and impeller are rotating when the the engine is running and the auger/impeller control lever is not engaged, immediately stop the unit.** Refer to Adjusting Auger/Impeller Drive Belt, page 17. If the problem persists, bring unit to an Authorized Toro Service Dealer for repair.

    IMPORTANT: Do not operate unit if auger and impeller rotate when auger/impeller control lever is not engaged.

Before Stopping

1. Engage auger to clear any remaining snow from inside the housing.

2. Run engine for a few minutes to help dry off any moisture which may have accumulated on engine.

3. With engine running, pull recoil starter with a rapid, continuous full arm stroke three or four times. This helps prevent possible freeze–up of recoil starter due to extreme snow blowing conditions.

   Note: Pulling of recoil starter rope produces a loud, clattering sound. This is not harmful to the engine or the starter.

Stopping

1. Release traction and auger/impeller control levers (Fig. 19).

2. Move throttle (Fig. 20) to SLOW and rotate ignition key (Fig. 19) to OFF (STOP).

3. Wait for all moving parts to stop before leaving the operator's position (behind the handles).

4. Remove key from ignition switch to prevent unauthorized use of snowthrower. Store key in a memorable place.

Free Wheeling Or Self–propelled Drive

The snowthrower can be free wheeled or engaged for self–propelled operation. There are two holes in each end of the axle. When axle pins are through outer axle holes and not through wheel hub (Fig. 5), snowthrower free wheels. By contrast, when both pins are installed through holes in wheel hub and inner hole of axle (Fig. 5), snowthrower propels itself.

Operating Tips

1. When snowthrower is not being used, close fuel shut–off valve and remove key from the switch.

2. Remove snow as soon as possible after it falls. This produces best snow removal results.

3. Adjust skids to match the type of surface being cleaned; refer to Adjusting Skids, page 15.

4. The snowthrower is designed to clean snow down to the contact surface, but there are times when the front of the snowthrower may tend to ride up. If this happens, reduce forward speed by shifting into a lower gear. If front still tends to ride up, lift up on both handles to hold down front of snowthrower.

5. Discharge snow downwind whenever possible, and overlap each swath to ensure complete snow removal. If wheels slip, shift into a lower gear to reduce forward speed.

6. Run snowthrower for a few minutes after clearing snow so moving parts do not freeze. Engage auger to clear any remaining snow from inside housing.

7. Do not overload snowthrower by clearing snow at too fast a rate. If engine slows down, shift to a lower gear to reduce forward speed.

8. Always use FAST throttle (maximum engine speed) when throwing snow for maximum throwing distance and to minimize clogging.

9. In wet or slushy conditions, clogging of the discharge chute will be reduced by maintaining maximum engine speed and by not overloading the engine.

⚠ DANGER

POTENTIAL HAZARD
- **Rotating impeller or auger can cause injury.**

WHAT CAN HAPPEN
- **Rotating impeller or auger can cut off or injure fingers or hands.**

HOW TO AVOID THE HAZARD
- **Stay behind the handles and away from discharge opening while operating the snowthrower.**
- **Keep face, hands, feet and any other part of your body or clothing away from concealed, moving or rotating parts.**
- **Before adjusting, cleaning, repairing and inspecting the snowthrower, and before unclogging the discharge chute, shut engine off and wait for all moving parts to stop.**
- **Also, pull wire off spark plug and keep wire away from the plug to prevent accidental starting.**
- **USE A STICK, NOT YOUR HANDS, TO REMOVE OBSTRUCTIONS FROM DISCHARGE CHUTE.**

10. In some snow and cold weather conditions, some controls and moving parts may freeze. Therefore, when any control becomes hard to operate, stop the engine and wait for all moving parts to stop; then check all parts for freeze up. DO NOT USE EXCESSIVE FORCE AND TRY TO OPERATE THE CONTROLS WHEN FROZEN. Free all controls and moving parts before operating.

Adjusting Scraper

Adjust the scraper to compensate for wear and to ensure that the auger does not contact the pavement.

1. Pull wire off spark plug and make sure wire does not contact plug accidentally (Fig. 24).
2. Check the tire pressure in both tires. Make sure that they are inflated equally between 7-15 psi.
3. Move snowthrower to a level surface.
4. Loosen the (4) flange bolts securing both skids to the auger side plates (Fig. 16) until the skids can be slid up and down easily.
5. Next, loosen the carriage screws securing the scraper to the auger housing (Fig. 26).
6. Support the auger blades (Fig. 26) so that the auger is 1/8–1/4 inch off the ground.
7. Move the scraper so that it contacts the flat surface all the way across, then tighten the two rear flanged bolts securing scraper and skids to the side plates. This temporarily locks the scraper in the proper position so that the remainder of the fasteners can be tightened without affecting adjustment.
8. Secure the scraper using carriage screws and nylon lock nuts.
9. Adjust the skids; refer to Adjusting Skids, page 15.

Adjusting Skids (Fig. 16)

For Concrete or Asphalt Surfaces

If the snowthrower is not cleaning up the snow close enough to the pavement, adjust the skids to lower the scraper.

If the scraper catches on cracks in the pavement, adjust the skids to raise the scraper.

1. Pull wire off spark plug and make sure wire does not contact plug accidentally (Fig. 24).
2. Loosen the (4) flange bolts securing both skids to the auger side plates (Fig. 16).
3. Check scraper adjustment to ensure that the auger does not contact the pavement; refer to Adjusting Scraper, page 14.
4. Support the scraper to be 1/8 inch above a level surface if the snowthrower is to be used on smooth pavement.

   Note: The scraper should be higher than 3/16 inch above the pavement if the pavement surfaces are cracked, rough or uneven.
5. Move the skids down to sit flat on the ground and tighten the (4) flange bolts securing both skids to the auger side plates.

For Gravel Surfaces

For gravel or crushed rock surfaces, adjust the skids to prevent picking up rocks.

1. Pull wire off spark plug and make sure wire does not contact plug accidentally (Fig. 24).
2. Loosen the (4) flange bolts securing both skids to auger side plates (Fig. 16). Next, slide skids down as far as possible so auger will be supported as far from the level surface as skid adjustment allows. Tighten flange bolts.

Maintenance

⚠ WARNING

POTENTIAL HAZARD
- **If you leave the wire on the spark plug, someone could accidentally start the engine.**

WHAT CAN HAPPEN
- **Accidental starting of engine could seriously injure you or other bystanders.**

HOW TO AVOID THE HAZARD
- **Pull wire off spark plug and remove key from switch before you do any maintenance. Also push wire aside so it does not accidentally contact spark plug.**

Draining Gasoline

1. Pull wire off spark plug and make sure wire does not contact plug accidentally (Fig. 24).
2. Close fuel shut–off valve located under fuel tank (Fig. 21).

⚠ WARNING

POTENTIAL HAZARD
- **Gasoline is highly flammable.**

WHAT CAN HAPPEN
- **Gasoline can be ignited and cause serious personal injury.**

HOW TO AVOID THE HAZARD
- **Drain gasoline outdoors.**
- **Drain gasoline from a cold engine only.**
- **Wipe up any gasoline that may have spilled.**
- **Do not drain gasoline near any open flame or where gasoline fumes may be ignited by a spark.**
- **DO NOT SMOKE a cigar, cigarette or pipe when handling gasoline.**

3. Place a clean drain pan under fuel shut–off valve.
4. Loosen hose clamp securing fuel line to valve and slide line off valve (Fig. 21).
5. Open valve by rotating valve to the right. This allows fuel to flow into drain pan.
6. Reinstall fuel line and secure with hose clamp.
7. Reinstall spark plug wire and restart unit. Run engine until it stops.

Lubricating Snowthrower

Lubricate moving parts of the snowthrower after every 15 hours of operation.

1. Pull wire off spark plug and make sure wire does not contact plug accidentally (Fig. 24).
2. Drain gasoline from fuel tank; refer to Draining Gasoline, page 16.
3. Tip snowthrower forward onto auger housing and block it so it cannot fall. Now, remove (8) screws holding back and bottom covers in place and remove covers (Fig. 27).
4. Lightly lubricate snowthrower with light oil as shown in Figures 28 and 29. Wipe up any excess oil.
5. Lightly grease axle gear (Fig. 28). Wipe up any excess grease.

   IMPORTANT: Do not get oil or grease on rubber wheel or friction drive plate because the wheel will slip and the rubber may deteriorate.
6. Reinstall back and bottom covers with (8) screws.

Changing Crankcase Oil

Initially, change oil after the first 2 hours of engine operation; thereafter, under normal conditions, change oil after every 25 hours of engine operation or annually, whichever comes first. If possible, run engine just before changing oil because warm oil flows better and carries more contaminants than cold oil.

1. Pull wire off spark plug and make sure wire does not contact plug accidentally (Fig. 24).
2. Clean area around oil drain plug. Next, slide oil drain pan below drain extension; then remove oil drain plug (Fig. 30).
3. After all oil is drained, reinstall oil drain plug.
4. Position snowthrower on a level surface. Next, fill crankcase with oil: refer to Fill Crankcase With Oil, page 10. Wipe up any oil that may have spilled.

Auger Gear Box Oil

The auger gear box oil level must be checked at time of snowthrower assembly, after every 10 hours of use, and upon removal from annual storage. To check the auger gear box oil level:

1. Position snowthrower on a level surface.
2. Pull wire off spark plug and make sure wire does not contact plug accidentally (Fig. 24).
3. Clean area around pipe plug so dirt is removed.
4. Remove pipe plug from gear box (Fig. 15).
5. Check level of oil in gear box. Oil must be at point of overflowing in filler opening.
6. If level of oil is low, add GL–5 or GL–6 SAE 85–95 EP transmission oil to the gear box until point of overflow.

   Note: Do not use synthetic gear oil.
7. Reinstall pipe plug in gear box.

Adjusting Auger/Impeller Drive Belt

If auger/impeller drive belt slips, resulting in decreased snowthrowing performance, either an adjustment or a new belt is required.

After 5-10 hours of snowthrower operation with a new auger/impeller drive belt, check belt to ensure proper belt tension is being maintained.

1. Check adjustment per steps 5–7 of Install Auger/Impeller Drive Control Linkage, page 9. Make adjustments if required.
2. Check tension of belt by operating the auger. **If belt still slips, replace the belt. USE ONLY GENUINE TORO REPLACEMENT PARTS TO ENSURE BEST PERFORMANCE AND SAFETY.**
3. Make sure that auger and impeller are not rotating when auger/impeller control lever is disengaged. While standing in the operator position behind the handles, look around to the side of the auger housing. If the auger and impeller are rotating, a large screw head on the side of the auger housing will be rotating (Fig. 25). **If the auger and impeller are rotating when the the engine is running and the auger/impeller control lever is not engaged, immediately stop the unit.** If the problem persists, bring unit to an Authorized Toro Service Dealer for repair.

   IMPORTANT: Do not operate unit if auger and impeller rotate when auger/impeller control lever is not engaged.

Replacing Auger/Impeller Drive Belt

When auger/impeller drive belt (Fig. 33) becomes worn, oil–soaked or otherwise damaged, belt replacement is required. **USE ONLY GENUINE TORO REPLACEMENT PARTS TO ENSURE BEST PERFORMANCE AND SAFETY.**

After 5-10 hours of snowthrower operation with a new auger/impeller drive belt, check belt to ensure proper belt tension is being maintained.

1. Pull wire off spark plug and make sure it does not contact the plug accidentally (Fig. 24).
2. Remove (3) screws holding belt cover in place and set cover aside (Fig. 31).
3. Loosen auger brake arm assembly by loosening rear screw and removing front screw that fasten auger brake arm assembly to frame (Fig. 32).
4. Remove idler pulley spring (Fig. 32).
5. Remove engine crankshaft screw, lock washer and washer (Fig. 33).
6. Separate and remove engine pulley sheave (Fig. 33).
7. Remove auger/impeller drive belt from center engine pulley and large auger/impeller pulley (Fig. 33).
8. Pull idler pulley outward and install new belt around large auger/impeller pulley (Fig. 33). Next, loop belt in front of center engine pulley, making sure that belt is on inside of idler pulley and belt guide (Fig. 33).
9. Reinstall engine pulley sheave, washer, lock washer and engine crankshaft screw. Make sure the indexing rib in the engine pulley sheave is aligned with the indexing notch in the center engine pulley (Fig. 34).
10. Make sure brake pad is properly installed on brake arm. Angled cut-off on brake pad must be positioned as shown in Figure 35.
11. Reinstall (2) screws that secure auger brake arm assembly. Make sure tabs fit into holes in left side of machine (Fig. 36).
12. Check and readjust belt guide to be .03-.06" from back side of auger/impeller drive belt when auger/impeller control lever is squeezed against handgrip (Fig. 37 & Fig. 19).
13. Check and adjust auger drive linkage. Refer to steps 5–7 of Install Auger/Impeller Drive Control Linkage, page 9.
14. Reinstall idler pulley spring.
15. Reinstall belt cover with (3) screws.
16. Make sure that auger and impeller are not rotating when auger/impeller control lever is disengaged. While standing in the operator position behind the handles, look around to the side of the auger housing. If the auger and impeller are rotating, a large screw head on the side of the auger housing will be rotating (Fig. 25). **If the auger and impeller are rotating when the the engine is running and the auger/impeller control lever is not engaged, immediately stop the unit.** Refer to Adjusting Auger/Impeller Drive Belt, page 17. If the problem persists, bring unit to an Authorized Toro Service Dealer for repair.

    IMPORTANT: Do not operate unit if auger and impeller rotate when auger/impeller control lever is not engaged.

Replacing Traction Drive Belt

When traction belt (Fig. 33) becomes worn, oil–soaked or otherwise damaged, belt replacement is required. **USE ONLY GENUINE TORO REPLACEMENT PARTS TO ENSURE BEST PERFORMANCE AND SAFETY.**

1. Pull wire off spark plug and make sure it does not contact the plug accidentally (Fig. 24).
2. Remove (3) screws holding belt cover in place and set cover aside (Fig. 31).

3. Loosen auger brake arm assembly by loosening rear screw and removing front screw (Fig. 32).

4. Remove idler pulley spring (Fig. 32).

5. Remove engine crankshaft screw, lock washer and washer (Fig. 33).

6. Separate and remove engine pulley sheave (Fig. 33).

7. Remove auger/impeller drive belt from center engine pulley, leaving belt looped around large auger/impeller pulley. Remove center engine pulley (Fig. 33).

8. Remove traction belt from traction pulley and engine crankshaft (Fig. 33).

9. Pull traction idler pulley outward and install new traction belt (Fig. 33).

10. Reinstall center engine pulley.

11. Pull idler pulley outward and loop auger/impeller drive belt in front of center engine pulley, making sure that belt is on inside of idler pulley and belt guide (Fig. 33). Do not bend belt guide.

12. Reinstall engine pulley sheave, washer, lock washer and crankshaft screw. Make sure the indexing rib in the engine pulley sheave is aligned with the indexing notch in the center engine pulley (Fig. 34).

13. Make sure brake pad is properly installed on brake arm. Angled cut-off on brake pad must be positioned as shown in Figure 35.

14. Reinstall (2) screws that secure auger brake arm assembly. Make sure tabs fit into holes in left side of machine (Fig. 36).

15. Check and readjust belt guide to be .03-.06" from back side of auger/impeller drive belt when auger/impeller control lever is squeezed against handgrip (Fig. 37 & Fig. 19).

16. Check and adjust auger drive linkage. Refer to steps 5–7 of Install Auger/Impeller Drive Control Linkage, page 9.

17. Reinstall idler pulley spring.

18. Reinstall belt cover with (3) screws.

19. Make sure that auger and impeller are not rotating when auger/impeller control lever is disengaged. While standing in the operator position behind the handles, look around to the side of the auger housing. If the auger and impeller are rotating, a large screw head on the side of the auger housing will be rotating (Fig. 25). **If the auger and impeller are rotating when the the engine is running and the auger/impeller control lever is not engaged, immediately stop the unit.** Refer to Adjusting Auger/Impeller Drive Belt, page 17. If the problem persists, bring unit to an Authorized Toro Service Dealer for repair.

    IMPORTANT: Do not operate unit if auger and impeller rotate when auger/impeller control lever is not engaged.

Adjusting Traction Drive

If speed selector shifts properly but snowthrower does not drive in reverse or forward speeds, an adjustment may be required.

1. Check adjustment per steps 4 and 5 of Install Traction Rod, page 8. Make adjustments if required.

2. If linkage is adjusted correctly and problem persists, contact your local Authorized Toro Service Dealer.

Adjusting Speed Selector

If there is slow or no ground speed in No.1 speed selection, or speed selector cannot be moved into No. 5 speed selection, an adjustment of the speed selector linkage is required.

1. Pull wire off spark plug and make sure wire does not contact plug accidentally (Fig. 24).

2. Move speed selector (Fig. 19) on control panel to the R_2 (REVERSE) position.

3. Remove cotter pin and washer. Pull speed selector rod out of hole in speed selector arm (Fig. 7).

4. Adjust unit's forward speed by rotating speed selector rod in trunnion (Fig. 8). Lengthening the rod makes forward speed faster. Shortening the rod makes forward speed slower.

5. Reinsert speed selector rod into speed selector arm and secure with washer and cotter pin.

6. If desired speed hasn't been achieved, repeat steps 3-5.

Adjusting Carburetor

The carburetor has been adjusted at the factory, but an occasional adjustment may be required.

1. Remove carburetor heater box: see Starting/Stopping Engine section, page 12.

   Note: Skip steps 2 and 3 if the engine will start and run.

2. Power Adjusting Screw (Fig. 38)—Close screw by gently rotating it clockwise until a slight seating resistance is felt. Next, rotate power adjusting screw one full turn—360°—counterclockwise.

   IMPORTANT: Do not close power adjusting screw or idle mixture screw too tight because the screw and seat will likely be damaged.

3. Idle Mixture Screw (Fig. 38)—Close screw by gently rotating it clockwise until a slight seating resistance is felt. Next, rotate idle mixture screw 1–1/2 full turns counterclockwise.

4. Start engine and let it warm up for approximately three to five minutes; then move throttle to FAST 🐇.

⚠ WARNING

POTENTIAL HAZARD
- **Engine must be running so final adjustment of the carburetor can be performed.**

WHAT CAN HAPPEN
- **Personal injury is possible.**

HOW TO AVOID THE HAZARD
- **Move auger drive and traction drive controls to DISENGAGE.**
- **Remember to keep hands, feet, face, and other parts of your body or clothing away from muffler, auger, discharge chute, and any moving part(s).**

⚠ WARNING

POTENTIAL HAZARD
- **Engine exhaust contains carbon monoxide.**

WHAT CAN HAPPEN
- **Carbon monoxide is an odorless, deadly poison.**

HOW TO AVOID THE HAZARD
- **Do not run engine indoors or in an enclosed area.**

5. Rotate power adjusting screw (Fig. 38) clockwise—in—1/8 turn at a time until engine misses because of a lean gasoline mixture. Then rotate screw counterclockwise—out—1/8 turn at time until engine runs unevenly because of a rich gasoline mixture. Next, rotate power adjusting screw clockwise, back to the midpoint between the rich and lean settings, so engine runs smoothly.

   Note: Wait several seconds between each 1/8 turn setting so engine can adjust to the new fuel mixture.

6. Move throttle to idle speed. Next, rotate idle speed screw until engine idles fast—1750 rpm.

7. Rotate idle mixture screw (Fig. 38) clockwise—in—1/8 turn at a time until engine begins to miss because of a lean mixture. Then rotate screw counterclockwise—out—1/8 turn at a time until engine runs unevenly because of rich mixture. Next, rotate idle mixture screw clockwise, back to the mid–point between rich and lean settings.

   Note: Wait several seconds between each 1/8 turn setting so engine can adjust to the new fuel mixture.

8. Again, rotate idle speed screw (Fig. 38) until engine idles at 1750 rpm.

9. Check carburetor adjustment by quickly moving throttle from low speed to high speed. Engine should accelerate without hesitation or sputtering. If engine does not accelerate properly, adjust carburetor to a slightly richer mixture. Also, if engine falters under load, open power adjusting screw 1/8 turn counterclockwise.

10. After carburetor is adjusted, shut engine off before reinstalling carburetor heater box.

Replacing Spark Plug

Use a Champion RJ–19LM spark plug or equivalent. Set air gap at 0.030" (0.76 mm). Since air gap between center and side electrodes of the spark plug increases gradually during normal engine operation, install a new plug after every 25 hours of engine operation.

1. Clean area around spark plug so foreign matter cannot fall into cylinder when plug is removed.

2. Pull wire off spark plug (Fig. 24) and remove plug from cylinder head.

   IMPORTANT: A cracked, fouled or dirty spark plug must be replaced. Do not sand blast, scrape or clean electrodes because grit may eventually release from the plug and fall into the cylinder. The result will likely be engine damage.

3. Set air gap between electrodes of new spark plug at 0.030" (0.76 mm) (Fig. 39). Next, install spark plug in cylinder head. Tighten plug to 15 ft–lb (20.4 N·m).

4. Push the wire onto the spark plug.

Storage

1. PREPARE THE FUEL SYSTEM:

- Add Toro Stabilizer/Conditioner to the fuel tank (one ounce per gallon of fuel).
- Run engine for five minutes to distribute conditioned fuel through fuel system.
- Stop engine, allow it to cool, and drain fuel tank or run engine until it stops.
- Restart the engine again and run it until it stops.
- Either choke or prime the engine, restart it a third time and run engine until it will not restart.
- Dispose of fuel properly. Recycle per local codes.
- **DO NOT store STABILIZED gasoline over 90 days.**

2. Remove spark plug from cylinder head. Next, pour two teaspoons of engine oil into spark plug hole in cylinder head. Install spark plug in cylinder head, but do not install wire on the plug. Then pull recoil starter slowly to distribute oil on inside of cylinder.

3. Lubricate the snowthrower: refer to Lubricating Snowthrower, page 16. Change crankcase oil: see Changing Crankcase Oil, page 17.

4. Clean the snowthrower. Touch up chipped surfaces with paint. Toro Re–Kote paint is available from an Authorized TORO Service Dealer. Sand affected areas before painting, and use a rust preventative to prevent metal parts from rusting.

5. Tighten all screws and nuts. If any part is damaged, repair or replace it.

6. Store snowthrower in a clean, dry place, and cover it for protection.

Gas Powered Consumer Products Except WPM

THE TORO TOTAL COVERAGE GUARANTEE

A Full Two-Year Warranty
(Limited Warranty for Commercial Use)

What Is Covered By This Express Warranty?

The Toro Company promises to repair any TORO Product used for normal residential purposes* if defective in materials or workmanship for a period of two years from the date of purchase. The cost of parts and labor is included, but the customer pays the transportation costs.

Transportation within a 15 mile radius of the servicing dealer is covered under this warranty for two-stage snowthrowers, walk behind debris equipment and all TORO Wheel Horse riding products. Single stage snowthrowers, and other products not specifically covered, are excluded from the transportation coverage provided by this warranty.

What Products Are Covered By This Warranty?

This warranty applies to all gasoline powered consumer products except walk power mowers. ProLine riding products, wide area walk behind mowers and 18" and 21" mowers are covered by separate warranty statements.

How About Commercial Use?

TORO Consumer Products used for commercial, institutional or rental use are covered by a limited warranty for the following time periods from the date of purchase:

Products	Warranty Period
• 300, 400 and 500 Series Lawn and Garden Tractors	
Chassis	1 year limited warranty
Engine	2 year limited warranty
• 260 Series Lawn and Garden Tractors, XL Lawn Tractors, Rear Engine Riders, Straight Shaft Trimmers, and Backpack Blowers	90 day limited warranty
• All Others	45 day limited warranty

How Do You Get Warranty Service?

Should you feel your TORO Product contains a defect in material or workmanship, contact the dealer who sold you the product or any Authorized TORO Service Dealer or TORO Master Service Dealer. The Yellow Pages of your telephone directory is a good reference source. The dealer will either arrange service at his/her dealership or recommend another Authorized Service Dealer who may be more convenient. You may need proof of purchase (copy of registration card, sales receipt, etc.) for warranty validation.

If for any reason you are dissatisfied with the Service Dealer's analysis of the defect in materials or workmanship or if you need a referral to a TORO Service Dealer, please feel free to contact us at the following address:

Toro Customer Service Department
8111 Lyndale Avenue South
Bloomington, MN 55420-1196
612-888-8801
800-348-2424

What Must You Do To Keep The Warranty In Effect?

You must maintain your TORO Product by following the maintenance procedures described in the operator's manual. Such routine maintenance, whether performed by a dealer or by you, is at your expense.

What Does This Warranty Not Cover? and How Does Your State Law Relate To This Warranty?

There is no other express warranty except the TORO Starting Guarantee on GTS Engines. This express warranty does not cover:

- Cost of regular maintenance service or parts, such as filters, fuel, lubricants, tune-up parts, blade sharpening, brake and clutch adjustments.

- Any product or part which has been altered or misused or required replacement or repair due to normal wear, accidents, or lack of proper maintenance.

- Repairs necessary due to improper fuel, contaminants in the fuel system, or failure to properly prepare the fuel system prior to any period of non-use over three months.

- Pickup and delivery charges for distances beyond a 15 mile radius from an Authorized TORO Service Dealer (covered products only).

All repairs covered by this warranty must be performed by an Authorized TORO Service Dealer using Toro approved replacement parts.

Repair by an Authorized TORO Service Dealer is your sole remedy under this warranty.

The Toro Company is not liable for indirect, incidental or consequential damages in connection with the use of the TORO Products covered by this warranty, including any cost or expense of providing substitute equipment or service during reasonable periods of malfunction or non-use pending completion of repairs under this warranty. Some states do not allow exclusions of incidental or consequential damages, so the above exclusion may not apply to you.

This warranty gives you specific legal rights, and you may also have other rights which vary from state to state.

* Normal residential purposes means mowing the lawn on the same lot as your home. Use at more than one location is considered commercial use and the commercial use warranty would apply.

COUNTRIES OTHER THAN THE UNITED STATES OR CANADA

Customers who have purchased TORO Products exported from the United States or Canada should contact their TORO Distributor (Dealer) to obtain guarantee policies for your country, province, or state. If for any reason you are dissatisfied with your Distributor's service or have difficulty obtaining guarantee information, contact the TORO importer. If all other remedies fail, you may contact us at The Toro Company.