FORM NO. 3318–747

TORO®

Helping you put quality into play. ™

MODEL NO. 04480–60657 & UP
MODEL NO. 04481–60549 & UP

OPERATOR'S MANUAL

8 & 11 BLADE CUTTING UNITS
(For Greensmaster® 3200)

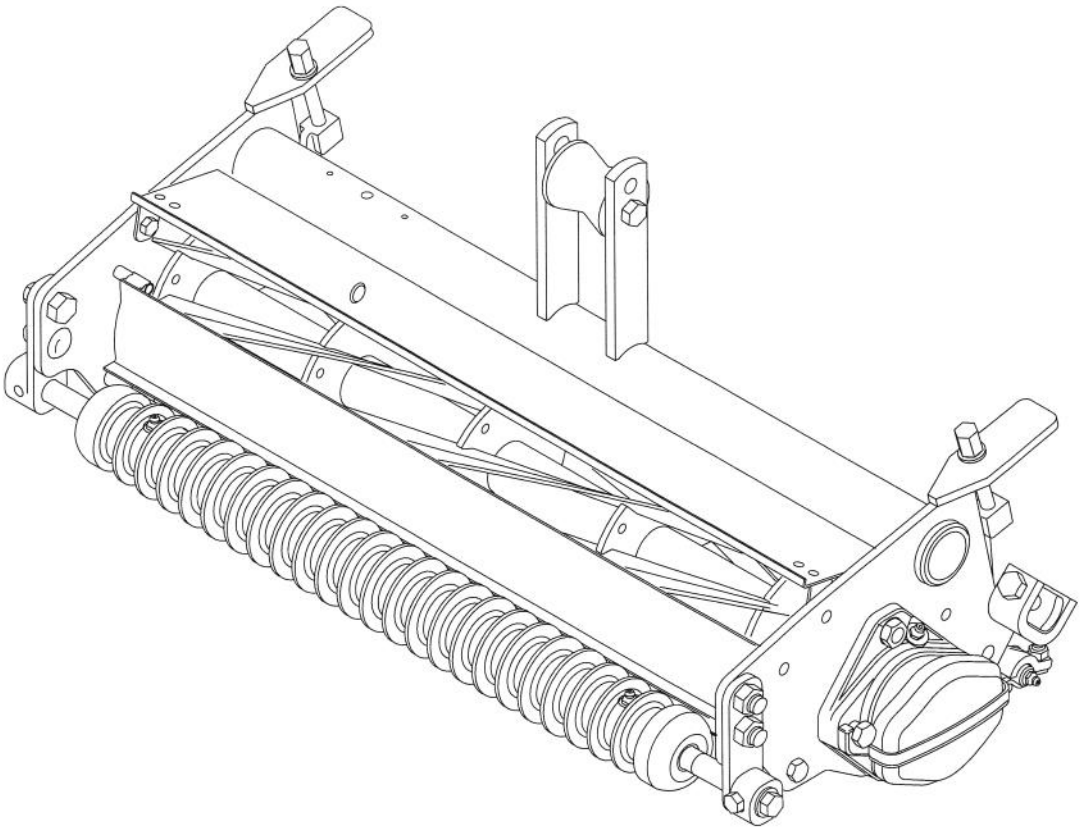

© The TORO COMPANY – 1996

TABLE OF CONTENTS

	Page
SPECIFICATIONS	2
ADJUSTING CUTTING UNIT	3
Adjusting Bedknife To Reel	4
Leveling Front Roller To Reel	4
Adjusting Height–of–Cut	5
OPERATING INSTRUCTIONS	5
Cutting Unit Daily Adjustments	5
LUBRICATION	5
Greasing Bearings And Bushings	5
BACKLAPPING CUTTING UNITS	6
NOTES	8
TORO PROMISE	8

SPECIFICATIONS

Height–of–Cut: Cutting height is adjusted on rear roller by two vertical screws and held by two locking capscrews. Bench HOC range is 3/32" (2.4mm) to 3/4" (l9mm). Effective HOC may vary depending on turf conditions and bedknife installed.

Reel Construction: Reels are 5 inches (13cm) in diameter, 21 inches (53.3 cm) in length. High carbon steel blades are welded to 5 stamped steel spiders. and heat treated to RC 42–48 hardness. The reel is ground for diameter, concentricity. and back grind.

Reel Bearings: Two double row ball bearings, 30 mm I.D., press fit onto reel shaft. Inverted seal pressed onto reel shaft. Bearing side load maintained by a 3 1/2 turn wave washer, no adjusting nut.

Reel Drive: The reel weldment shaft is a 1.375 inch diameter tube with drive inserts permanently pressed in both ends. A replaceable floating coupler with an internal eight tooth spline is factory installed on the right end, and held in place by a snap ring. The floating coupler may be moved to the other end when the cutting unit is used on the tractor front right position.

Frame Construction: Single top tube is welded to two sideplates. A bolt–in cross rod acts to set the front frame width and stiffen the assembly. The lift straps have a replaceable roller that may be moved to change transport height.

Bedknife: Replaceable, 13 screw, single edged, high carbon steel bedknife austempered to RC 48–55, fastened to a machined cast iron bedbar. Tournament bedknife is standard.

Bedknife Adjustment: Two opposing screws on each end of the bed bar are used to level and regulate bedknife to reel contact.

Front Roller: Standard front roller is 2.5 inch (6.4 cm) diameter weihle. Right bracket has an eccentric shoulder bolt to provide leveling. A second eccentric may be added to the left bracket for increased leveling range. Roller has a through shaft with greaseable ball bearings.

Rear Roller: Standard rear roller is 2 inch *(5.2* cm) diameter smooth roller. Roller has a through shaft with greaseable ball bearings.

Front Shield: A snap–in shield covers the lower front of the reel. The shield helps improve grass throwing into the basket and prevents the basket sealing flap from being damaged by the reel.

Counterbalance Weight: The left end of cutting unit has a weight with a Spin flange like the reel motors for easy Installation. The weight seals the bearing area and balances the reel motor's weight during cutting.

Options;

Micro Cut Bedknife	Part No. 93–4262
Lo Cut Bedknife	Part No. 63–8470
High Cut Bedknife	Part No. 92–2510
Fairway Bedknife	Part No. 63–8610

Specifications and design subject to change without notice.

ADJUSTING CUTTING UNITS

IMPORTANT: Read this Operator's Manual thoroughly before operating cutting unit. Failure to do so may result in damage to the cutting unit.

Note: Left and right sides of cutting unit refer to normal operating position.

After the cutting unit is unboxed, use the following procedures to assure the cutting units are adjusted properly.

1. Check each end of the reel for grease. Grease should be visibly evident in the reel bearings.

2. Insure that all nuts and bolts are securely fastened.

3. Position lift roller to match suspension.

- Upper position for old style suspensions
- Lower position for new suspensions (On GR 3200)

4. Install pull rod studs and lockwashers (included in loose parts), to front roller shaft ends, if using old type suspension.

5. Check to make sure bedknife and reel are parallel. Refer to Adjusting Bedknife to Reel, page 3.

ADJUSTING BEDKNIFE TO REEL

(Fig. 1 & 2)

1. Remove cutting units from traction unit and position on a level work surface.

2. Adjustment of bedknife to reel is accomplished by first, loosening bottom adjusting screw on each side of cutting unit, then tightening the top adjusting screw on each side of cutting unit. This adjustment will position the bedknife closer to the reel blades.

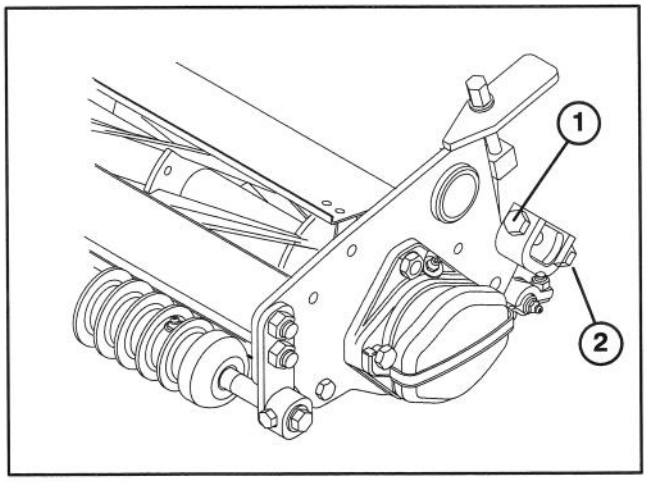

Figure 1
1. Top adjusting screw
2. Bottom adjusting screw

IMPORTANT: Use only a M13 wrench, 3" to 6" in length when adjusting bedknife screws. A longer wrench will provide too much leverage and may cause distortion of the mounting plate for the adjustment screws.

3. After adjusting bedknife to reel, make sure that both top and bottom adjusting screws are secured on both ends of cutting unit.

4. After the adjustment is accomplished, check to see if the reel can pinch paper when inserted from the front and cut paper when inserted at a right angle It should be possible to cut paper with minimum contact between the bedknife and the reel blades. Should excessive reel drag be evident (more than 7 inch pounds) it will be necessary to either back lap or re–grind the cutting unit to achieve the sharp edged needed for precision cutting. Refer to Toro Reel Sharpening Manual, Form No. 80–300PT.

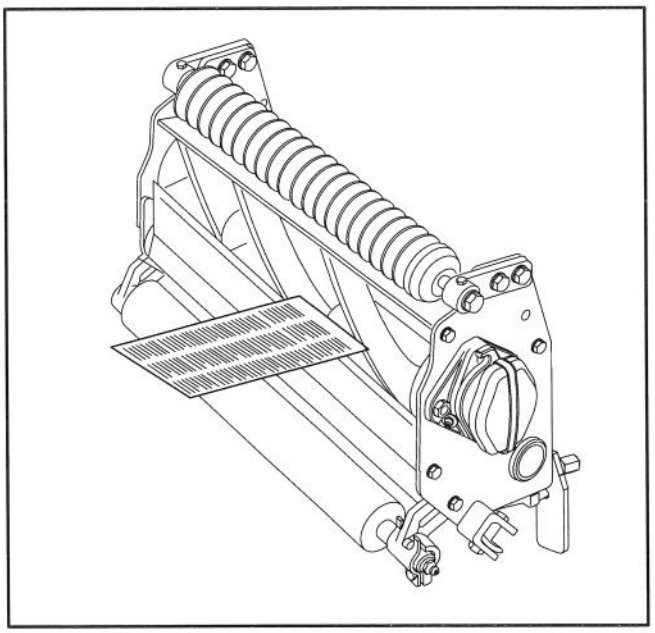

Figure 2

LEVELING FRONT ROLLER TO REEL

(Fig. 3)

1. Position Cutting Unit on a flat, level surface.

2. Position a 1/4 inch or thicker plate under the reel blades and against the front face of the bedknife.

Note: Be sure the plate covers the full length of reel blades and three blades contact plate.

3. Loosen locknuts retaining right front roller bracket.

ADJUSTING CUTTING UNITS

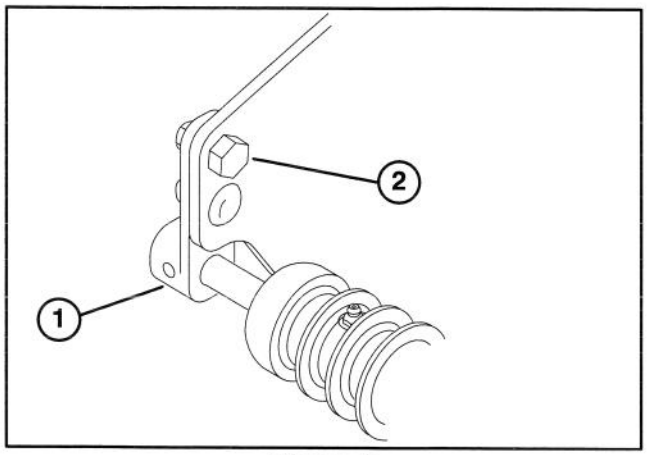

Figure 3
1. Right front roller bracket
2. Upper right roller mounting bolt

4. While holding reel securely on plate and maintaining pressure on front roller, rotate upper right roller mounting bolt. This mounting bolt has an offset, which when rotated, acts as an eccentric (cam) to raise or lower the roller. On the bolt head there is an I.D. dot which denotes the offset of the bolt. Dot indicates in which direction right end of roller moves when bolt is turned.

Note: Insure both front roller brackets are in the same hole.

5. To verify if roller is level, try inserting a piece of paper under each end of roller.

6. When roller is level, tighten nuts securely.

Note: If additional adjustment is required, replace one screw on L.H. bracket with another eccentric bolt, part no. 93–2573.

Note: There are four positions for the front roller brackets.

Position 1: Least aggressive; use for very soft and tender turf.

Position 2: Standard position; use for most conditions.

Position 3: More aggressive; use on firm turf or higher Height–of–Cuts.

Position 4: Most aggressive; use only on very firm greens or at the highest Height–of–Cut.

Note: A more aggressive setting will increase grass removal and provide a cleaner cut, but may cause increased scalping and marking.

ADJUSTING HEIGHT OF CUT (Fig. 4)

1. Verify that front roller is level and bedknife to reel contact is correct.

2. Turn cutting unit over (90°) and rest it on rear roller and top rear tabs. Loosen locknuts on capscrews retaining rear roller brackets.

3. On gauge bar (Part no. 13–8199), set head of screw to desired height of cut. This measurement is from bar face to underside of screw head.

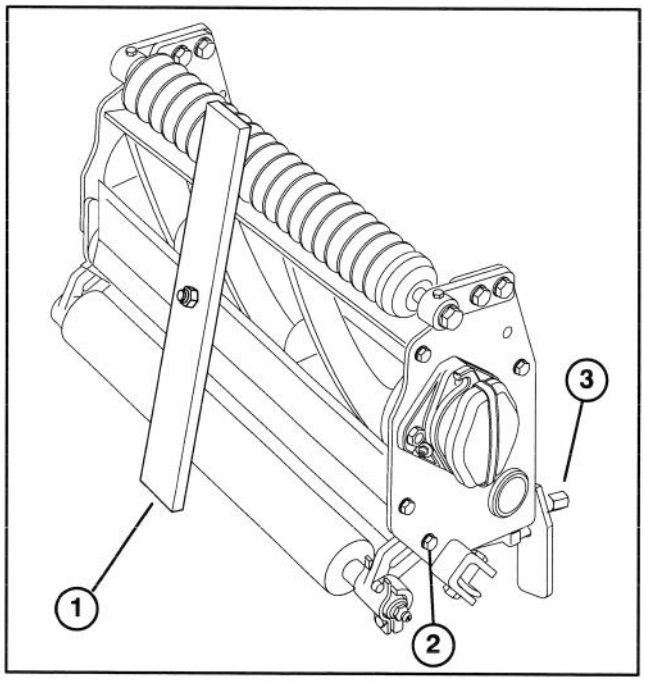

Figure 4
1. Gauge bar
2. Roller bracket capscrew
3. Height–of–cut knob

4. Place the bar across the front and rear rollers and adjust the height–of–cut knob until the underside of screw head engages the bedknife cutting edge.

IMPORTANT: Repeat procedure on each end of bedknife and tighten locknuts retaining rear roller brackets on each end.

OPERATING INSTRUCTIONS

CUTTING UNIT DAILY ADJUSTMENTS

Prior to each day's mowing, or as required, each cutting unit must be checked to verify proper bedknife–to–reel contact. **This must be performed even though quality of cut is acceptable.**

IMPORTANT: Light contact is preferred at all times. If light contact is not maintained, bedknife / reel edges will not sufficiently self–sharpen and dull cutting edges will result after a period of operation. If excessive contact is maintained, bedknife/reel wear will be accelerated, uneven wear can result, and quality of cut may be adversely affected.

Note: As the reel blades continue to run against the bedknife a slight burr will appear on the front cutting edge surface the full length of the bedknife. If a file is occasionally run across the front edge to remove this burr, improved cutting can be obtained.

After extended running, a ridge will eventually develop at both ends of the bedknife. These notches must be rounded off or filed flush with cutting edge of bedknife to assure smooth operation.

LUBRICATION

GREASING BEARINGS AND BUSHINGS

Each cutting unit has (6) grease fittings that must be lubricated regularly with No. 2 General Purpose Lithium Base Grease.

1. The grease fitting locations and quantities are: Reel bearings (2) and front and rear rollers (2 ea.) (Fig. 5)

IMPORTANT: Lubricating cutting units immediately after washing helps purge water out of bearings and increases bearing life.

1. Wipe each grease fitting with a clean rag.

2. Apply grease until pressure is felt against handle.

IMPORTANT: Do not apply too much pressure or grease seals will be permanently damaged.

3. Wipe excess grease away.

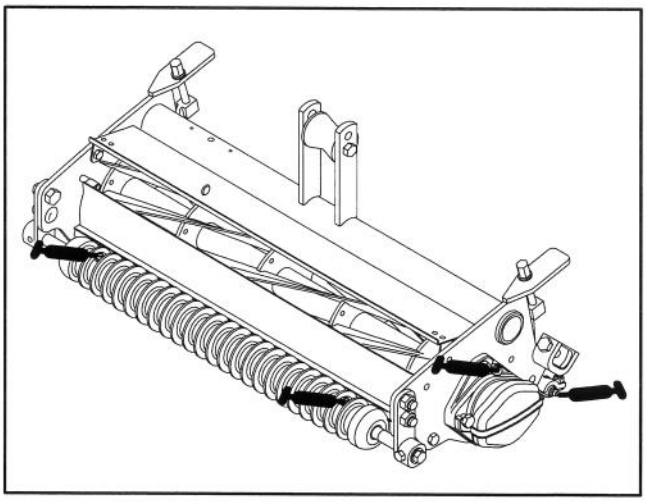

Figure 5

BACKLAPPING CUTTING UNITS

CAUTION

Be careful when lapping the reel because contact with the reel or other moving parts can result in personal injury.

1. Position machine on a clean, level surface, lower the cutting units, stop the engine, engage parking brake and remove key from ignition switch.

2. Remove reel motors from cutting units and disconnect and remove cutting units from lift arms.

3. Connect the backlapping machine to cutting unit by Inserting a piece of 3/8" square stock into splined coupling at right end of cutting unit.

Note: Additional instructions and procedures on Backlapping are available in the TORO Sharpening Reel & Rotary Mowers Manual Form No. 80–300PT.

NOTE: For a better cutting edge, run a file across the front face of the bedknife when the lapping operation is completed. This will remove any burrs or rough edges that may have built up on the cutting edge.

NOTES

The Toro Promise

A One Year Limited Warranty

The Toro Company promises to repair your TORO Product if defective in materials or workmanship. The following time periods from the date of purchase apply:

Commercial Products ..... **1 Year**

The cost of parts, labor and transportation are included.

If you feel your TORO Product is defective and wish to rely on The Toro Promise, the following procedure is recommended:

1. Contact your Authorized TORO Distributor or Commercial Dealer (the Yellow Pages of your telephone directory is a good reference source).

2. The TORO Distributor or Commercial Dealer will advise you on the arrangements that can be made to inspect and repair your product.

3. The TORO Distributor or Commercial Dealer will inspect the product and advise you whether the product is defective and, if so, make all repairs necessary to correct the defect without an extra charge to you.

If for any reason you are dissatisfied with the distributor's analysis of the defect or the service performed, you may contact us.

Write:

TORO Commercial Products Service Department
8111 Lyndale Avenue South
Minneapolis, MN 55420–1196

The above remedy of product defects through repair by an Authorized TORO Distributor or Commercial Dealer is the purchaser's sole remedy for any defect.

THERE IS NO OTHER EXPRESS WARRANTY. ALL IMPLIED WARRANTIES OF MERCHANTIBILITY AND FITNESS FOR USE ARE LIMITED TO THE DURATION OF THE EXPRESS WARRANTY.

Some states do not allow limitations on how long an implied warranty lasts, so the above limitation may not apply to you.

This Warranty applies only to parts or components which are defective and does not cover repairs necessary due to normal wear, misuse, accidents, or lack of proper maintenance. Regular, routine maintenance of the unit to keep it in proper operating condition is the responsibility of the owner.

All warranty repairs reimbursable under The Toro Promise must be performed by an Authorized Toro Commercial Dealer or Distributor using Toro approved replacement parts.

Repairs or attempted repairs by anyone other than an Authorized TORO Distributor or Commercial Dealer are not reimbursable under the TORO Promise. In addition, these unauthorized repair attempts may result in additional malfunctions, the correction of which is not covered by warranty.

THE TORO COMPANY IS NOT LIABLE FOR INDIRECT, INCIDENTAL OR CONSEQUENTIAL DAMAGES IN CONNECTION WITH THE USE OF THE PRODUCT INCLUDING ANY COST OR EXPENSE OF PROVIDING SUBSTITUTE EQUIPMENT OR SERVICE DURING PERIODS OF MALFUNCTION OR NON–USE.

Some states do not allow the exclusion of incidental or consequential damages, so the above exclusion may not apply to you.

This warranty gives you specific legal rights, and you may also have other rights which vary from state to state.

COUNTRIES OTHER THAN THE UNITED STATES OR CANADA

Customers who have purchased TORO products exported from the United States or Canada should contact their TORO Distributor (Dealer) to obtain guarantee policies for your country, province, or state. If for any reason you are dissatisfied with your Distributor's service or have difficulty obtaining guarantee information, contact the TORO importer. If all other remedies fail, you may contact us at The Toro Company.

Compliance with Radio Interference Regulations Certified.