Form No. 3392-355 Rev B

42in Recycler® Kit

TimeCutter® MX Series Riding Mower

Model No. 131-4183

Installation Instructions

⚠ WARNING

CALIFORNIA
Proposition 65 Warning

This product contains a chemical or chemicals known to the State of California to cause cancer, birth defects, or reproductive harm.

Installation

Loose Parts

Use the chart below to verify that all parts have been shipped.

Procedure	Description	Qty.	Use
1	No parts required	–	Prepare the mower.
2	No parts required	–	Remove the blades.
3	Baffle assembly	1	Install the kit.
	Kicker	1	
	Flange nut (5/16 inch)	6	
	Carriage bolt (5/16 x 3/4 inch)	1	
	Kicker plate	1	
	Self-tapping screw (5/16 x 3/4 inch)	2	
	Decal	1	
4	Mulching mower blade	2	Install the blades and mower.

⚠ WARNING

While maintenance or adjustments are being made, someone could start the engine. Accidental starting of the engine could seriously injure you or other bystanders.

Remove the key from the ignition switch, engage parking brake, and pull the wires off the spark plugs before you do any maintenance. Push the wires aside so they do not accidentally contact the spark plugs.

1

Preparing the Mower

No Parts Required

Procedure

1. Stop the engine and remove the ignition key.
2. Remove the mower as described in your *Operator's Manual*.
3. Turn the mower upside down.

© 2014—The Toro® Company
8111 Lyndale Avenue South
Bloomington, MN 55420

Register at www.Toro.com.

Original Instructions (EN)
Printed in the USA
All Rights Reserved

3392-355 B

4. Remove any debris and grass clippings from the underside of the deck.
5. Locate the cutoff baffle at the side-discharge opening on the mower deck (Figure 1).

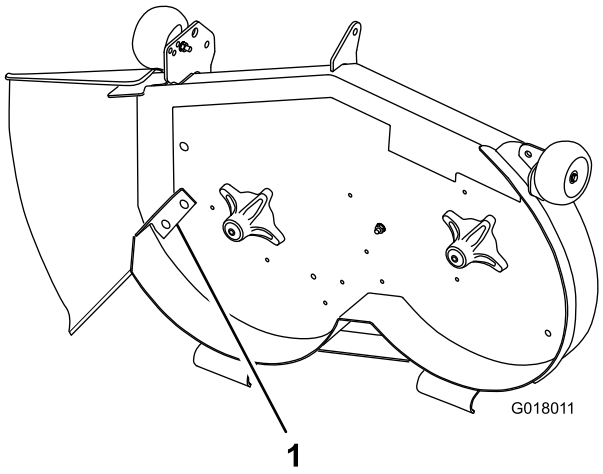

Figure 1

1. Cutoff baffle (existing)

6. Remove the fasteners that secure the cutoff baffle to the deck, and remove the cutoff baffle.

   Note: Save the cutoff baffle for converting the mower deck back to side-discharging.
7. Install the fasteners into the same holes in the deck from which they were originally removed.

   Note: This ensures that no holes are left open when you operate the deck.

⚠ DANGER

Open holes in the mower deck expose you and others to thrown debris. Debris thrown out of the holes in the mower deck can cause injury.

- **Never operate the mower deck without hardware mounted in all holes in the mower deck.**
- **Install hardware in the mounting holes when you remove the baffle.**

2

Removing the Blades

No Parts Required

Procedure

1. Choose the style of blade, of those shown in Figure 2 and Figure 3 that best matches the blades on your mower. Hold the blade end using a rag or thickly-padded glove and remove the blade as shown.

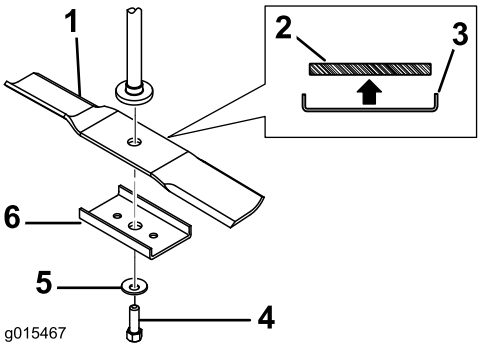

Figure 2

Blade style A mounting configuration

1. Blade style A
2. Cross section of blade style A
3. Blade stiffener required
4. Blade bolt
5. Curved washer
6. Blade stiffener

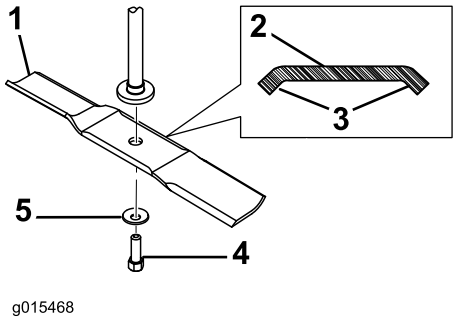

Figure 3

Blade style B mounting configuration

1. Blade style B
2. Cross section of blade style B
3. Bends add extra stiffness
4. Blade bolt
5. Curved washer

2. The replacement blades within this kit do not need a stiffener. If you removed one, keep it in case future replacement blades require it.

3

Installing the Kit

Parts needed for this procedure:

1	Baffle assembly
1	Kicker
6	Flange nut (5/16 inch)
1	Carriage bolt (5/16 x 3/4 inch)
1	Kicker plate
2	Self-tapping screw (5/16 x 3/4 inch)
1	Decal

Procedure

1. Install the baffle assembly to the right-hand side of the mower deck with a carriage bolt (5/16 x 3/4 inch) and 2 flange nuts (5/16 inch) as shown in Figure 4.

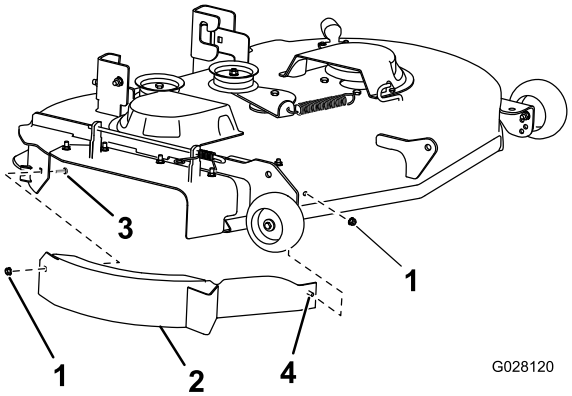

Figure 4

The side-discharge chute has been removed for the purpose of clarity.

1. Flange nut (5/16 inch)
2. Baffle assembly
3. Carriage bolt (5/16 x 3/4 inch)
4. Welded post

Note: Hand tighten the fasteners.

2. Remove 2 plug bolts and 2 nuts from the mower deck in the locations shown in Figure 5.

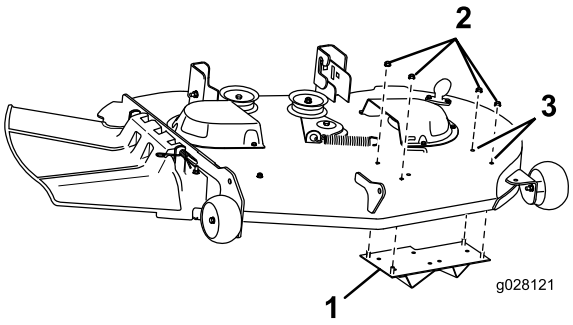

Figure 5

1. Kicker plate
2. Flange nut (5/16 inch) (4)
3. Remove 2 plug bolts and 2 nuts here.

3. Secure the kicker plate to the left-hand side of the mower deck using 4 flange nuts (5/16 inch) as shown in Figure 5.
4. Tighten all fasteners.
5. Install the kicker to the underside of the mower deck using 2 self-tapping screws (5/16 x 3/4 inch) at the location shown in Figure 6.

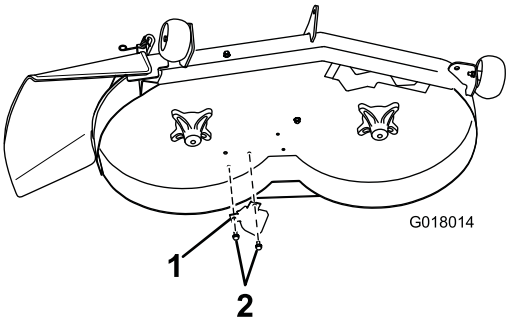

Figure 6

1. Kicker
2. Self-tapping screws (5/16 x 3/4 inch)

6. Install the decal to the area shown in Figure 7.

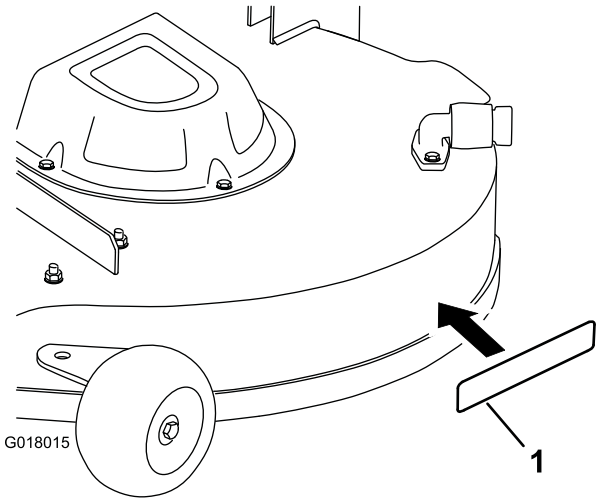

Figure 7

1. Decal

A. Thoroughly clean the area where you will install the decal.

B. Dampen the area with water or mildly soapy water.

C. Peel the decal from the backing and install it in place (Figure 7).

D. Squeegee across the surface of the decal, starting at the center of the decal and working toward the edges, using overlapping strokes.

4

Installing the Blades and Mower

Parts needed for this procedure:

2	Mulching mower blade

Procedure

1. Install the blade onto the spindle shaft (Figure 8).

   Important: The sail area (curved part) of the blade must be pointing upward toward the inside of the mower to ensure proper cutting.

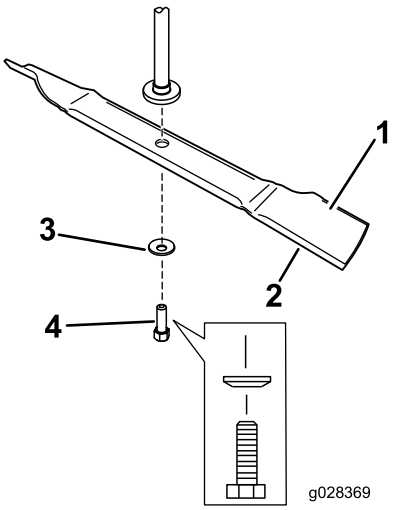

Figure 8

1. Sail area of blade
2. Blade
3. Curved washer
4. Blade bolt

2. Install the curved washer (cupped side toward the blade) and the blade bolt (Figure 8).

   Note: Do not install a blade stiffener. These blades do not require the blade stiffener (Figure 8).

3. Torque the blade bolt to 47-88 N-m (35-65 ft-lb).
4. Install the mower as described in your *Operator's Manual.*
5. Install the spark plug cables and ignition key.

Operation

Converting to Side-Discharge Operation

1. Reverse the steps in 4 Installing the Blades and Mower (page 4).
2. Reverse the steps in 3 Installing the Kit (page 2).
3. Install standard blades as described in the *Operator's Manual.*

Operating Tips

Selecting the Proper Height-of-Cut Setting to Suit the Conditions

Remove approximately 1 inch or no more than 1/3 of the grass blade when cutting. In exceptionally lush and dense grass you may need to raise the height-of-cut setting another notch or convert to side-discharging or bagging operations.

Mowing Long Grass

If the grass has grown slightly longer than normal, or if it contains a high degree of moisture, raise the cutting height higher than usual and cut the grass at this setting. Then cut the grass again using the lower, normal setting.

Mowing in Extreme Conditions

Air is required to cut and recut grass clippings in the mower deck, so do not set the height-of-cut too low or totally surround the housing by uncut grass. Always have one side of the mower deck free from uncut grass, allowing air to be drawn into the housing. When making an initial cut through the center of the uncut area, operate the machine at a slower speed and back up if the mower deck starts to clog.

Mowing at the Proper Intervals

Under normal conditions you'll need to mow every 4 to 5 days. However, grass grows at different rates at different times. In order to maintain the same height-of-cut, cut more frequently in early spring; as the grass growth rate slows in mid summer, cut only every 8 to 10 days. If you are unable to mow for an extended period due to the weather conditions or other reasons, convert to side-discharging or bagging options or mow first with the height-of-cut at a high level; then mow again 2 to 3 days later at a lower height setting.

Mowing with Sharp Blades

A sharp blade cuts cleanly and without tearing or shredding the grass blade like a dull blade. Tearing and shredding causes the grass to turn brown at the edges, which impairs growth and increases susceptibility to disease.

Cleaning after Operating

To ensure optimum performance, clean the underside of the mower deck. Allowing the residue to build up in mower deck will decrease cutting performance.

Notes:

Notes:



Count on it.