FORM NO. 3318–897

TORO®

WHEEL HORSE® RECYCLER® RIDER

MODEL 70040 – 7900001 & UP

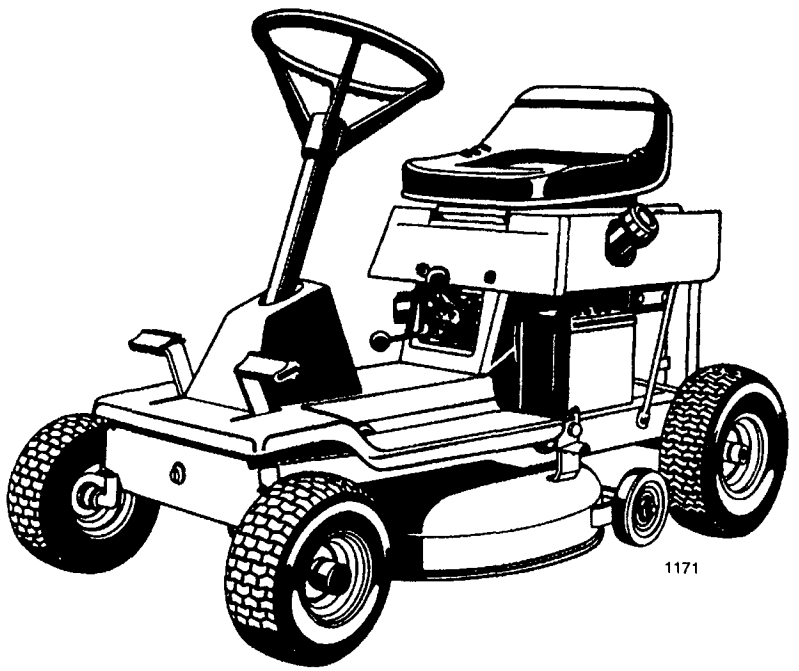

OPERATOR'S MANUAL

IMPORTANT: Read this manual carefully. It contains information about your personal safety. Become familiar with the controls and the proper use of the product before you use it.

FOR YOUR SAFETY

Two of the most potentially serious types of accidents involving power mowers are contact with the mower blade and overturning the rider/tractor. To minimize the possibility of having these types of accidents, read and follow these instructions. Also refer to the Safe Operation Practice in this Operator's Manual for other important safety information.

BLADE CONTACT

! DANGER! Mower Blades are Designed to CUT: therefore,

ALWAYS:

- Shut off engine and set parking brake.
- Remove ignition key.
- Allow moving parts to stop before dismounting, servicing, or cleaning unit.

NEVER:

- Perform ANY work on the mower with engine running.
- Mow with other people around, especially children.
- Leave mower unattended.



RIDER/TRACTOR STABILITY

Vehicle stability changes with conditions and is affected by:

- Slope angle and length/bumps/holes, etc.
- Slippery conditions (lawn moisture and length)
- Operator size and position/how loaded/ equipment used
- Speed/braking/steering changes
- Operator physical limitations/alertness

ALWAYS:

- Use good judgement when operating the rider/ tractor, especially on slopes.
- Maintain the vehicle in good operating condition.
- Be attentive to changing conditions affecting vehicle stability.

NEVER:

- Operate vehicle on extreme slopes.
- Operate vehicle across slopes.
- Abruptly change speed or direction.



TABLE OF CONTENTS

	Page
Safe Operating Requirements – Riding Vehicles	3
Safety Decals and Instructions	7
Specifications	8
Loose Parts	9
Setting Up Instructions	9
Install Seat	9
Install Steering Wheel	9
Activating and Charging Battery	10
Before Operating	11
Fill Crankcase With Oil	11
Fill Fuel Tank With Gasoline	11
Controls	12
Starting and Stopping Instructions	13
Operating Instructions	13
Break-in	13
Using Parking Brake	13
Adjusting Height-of-Cut	13
Operating Procedure	13
Installing Discharge Cover	14
Side Discharging or Bagging	14
Grass Deflector	14
Recycler® Rider Tips	15
Maintenance Interval Chart	17
Maintenance	17
Grease Front Axle Spindles and Wheels	18
Grease Rear Axles	18
Lubricate Pivot Points	18
Servicing Air Cleaner	18
Cleaning Cooling System	19
Changing Crankcase Oil	19
Draining Gasoline From Fuel Tank	19
Replacing Spark Plug	20
Adjusting Throttle Control	20
Adjusting Carburetor	20
Servicing Cutter Blade	21
Cleaning Underside of Mower Housing	22
Removing/Installing Mower Housing	22
Replacing Blade Drive Belt	23
Replacing Traction Drive Belt	24
Checking/Adjusting Drive Chain	25
Adjusting Brake	26
Checking Electrical Connections	26
Checking Safety Interlock System	26
Preparing Mower For Storage	27
Wiring Diagram	28
Trouble Shooting	29
Maintenance Record	31
Slope Chart	33
Toro Total Coverage Guarantee	Back Page

These symbols mark important instructions relating to your personal safety. To avoid possibility of injury, read and follow such instructions carefully.

DANGER *This symbol warns of extreme immediate hazards which will result in severe personal injury or death if proper precautions are not taken.*

CAUTION *This symbol warns of a hazard or unsafe practice which can result in personal injury or death if proper precautions are not taken.*

When manual refers to left or right side of vehicle, it means your left or right when sitting in driver's seat.

SAFE OPERATING REQUIREMENTS – RIDING VEHICLES

WARNING: Engine exhaust contains carbon monoxide which is an odorless, deadly poison. Carbon monoxide is also known to the State of California to cause birth defects. Do not run engine indoors or in an enclosed area.

GENERAL

1. This machine is capable of amputating hands and feet and can throw objects that can cause injury and damage. KNOW the controls and how to stop machine quickly. READ THIS OPERATOR'S MANUAL and instructions furnished with attachments. Read, understand, and obey all safety messages appearing on the machine and in the operator's manual. LEARN from your operator's manual and from careful EXPERIENCE how to operate your equipment correctly. Know your machine's limitations.

2. Keep hands, feet, hair and loose clothing away from attachment discharge area, underside of mower deck or any moving parts while engine is running.

3. The use of drugs or alcohol while operating any equipment will place your safety in peril. Do not attempt operation of this machine while taking drugs or medication or while drinking alcoholic beverages.

©The Toro Company – 1996

SAFE OPERATING REQUIREMENTS

4. Only responsible persons with mature judgment and proper physical capabilities should be allowed to operate this machine, and only after instruction in the proper use of this equipment.

5. Do not allow children to operate machine.

6. Do not carry passengers.

7. The purpose of this machine is to perform work. This equipment is not intended for sport or recreation.

8. Do not mow when people or pets are around.

9. Clear work area of objects (wire, rocks, etc.) which might be picked up and thrown.

10. Take all possible precautions when leaving vehicle unattended; disengage power-take-off, lower attachments, shift into neutral, set parking brake, stop engine and remove key.

11. Watch out for traffic when crossing or near roadways.

12. Machine and attachments should be stopped and inspected for damage after striking a foreign object. Damage should be repaired before restarting and operating equipment.

13. Do not change engine governor settings or over–speed engine.

14. Wear appropriate protective clothing when operating equipment. Long pants and substantial footwear are essential. Do not operate with bare feet or open sandals.

15. Do not operate equipment unless properly seated with feet on footrests or pedals.

16. Keep your eyes and mind on your machine, attachment and the working area. Do not let other interests distract you.

17. Safety switches are intended to stop or prevent starting of engine to help prevent accidents. OPERATOR SHOULD TAKE PRECAUTIONS AND NOT RELY ENTIRELY ON SAFETY SWITCH(ES). Check switches for proper operation before each use.

18. Care should be used not to touch equipment or attachment parts which may be hot from operation. Muffler and nearby areas may exceed 150° F. Allow cooling to occur before attempting to maintain, adjust or service.

19. Use of stereo headphones, ear protection or other sound altering/dampening devices may limit your ability to hear warning sounds (horns, shouts, etc.).

FUEL / FIRE PRECAUTIONS

20. Handle gasoline with care. It is highly flammable.

21. Use approved gasoline container. Place container out of reach of children.

22. Use gasoline only as a fuel — never as a cleaner.

23. Never remove fuel cap or add gasoline to a running or hot engine, or an engine that has not been allowed to cool for several minutes after running.

24. Never fill fuel tank indoors. Wipe up spilled gasoline.

25. Open doors if engine is run in garage — exhaust fumes are dangerous. Do not run engine indoors.

26. Do not fill machine with gasoline while smoking or when near open flame or sparks.

27. Never store equipment with gasoline in the tank inside a building where fumes may reach an open flame or spark.

28. Allow engine to cool before storing in any enclosure.

29. To reduce fire hazard, keep engine and attachments free of grass, leaves or excessive grease.

30. Battery acid is a poison and can cause a burn. Avoid contact with skin, eyes and clothes and protect your face, eyes and clothing when working around the battery.

31. Battery gases can explode. Keep cigarette sparks and flames away from battery.

EQUIPMENT USE AND OPERATION

32. It is recommended that first operation of equipment be done at a slow speed with attachment disengaged. Continue this practice until operator is thoroughly familiar with the controls and has developed operating skills.

33. Disengage all attachment clutches, set parking brake and shift into neutral before attempting to start engine.

34. Disengage power to attachment(s), set parking brake and stop engine before leaving operator position.

35. Disengage power to attachment(s) and stop engine before making any repairs or adjustments.

36. Disengage power to attachment(s) when transporting or not in use.

37. Disengage attachment clutch before attempting to remove the mower from a hole or other obstruction.

SAFE OPERATING REQUIREMENTS

38. Disengage power to attachment(s) before backing. Do not mow in reverse unless absolutely necessary and then only after careful observation of the entire area behind the machine.

39. LOOK behind machine to make sure the area is clear before placing the transmission in reverse and continue looking behind while backing.

40. Always back up loading ramps and tilt bed trailers.

41. The parking brake is designed to hold rider in place at rest, with engine off. Parking brake will not restrain rider with engine running and transmission engaged.

STABILITY / TIP OVER / TRACTION

42. Know the terrain on which you are operating your equipment. There are areas on which your equipment cannot be safely operated.

43. Avoid operating equipment on hillsides, slopes or rough terrain. DO NOT operate machine on hillsides or slopes exceeding 15° (27% grade). If safety is in doubt STAY OFF THE SLOPE.

44. Reduce speed and exercise extreme caution on slopes above 10° (18% grade) to prevent tipping or loss of control. Never mow uphill on these slopes — mow downhill only. If a steep hill must be ascended, back up the hill, and drive forward down the hill, keeping tractor in gear. If necessary to turn on hill, always turn downhill.

45. Mow up and down the face of slopes greater than 5° (9% grade), never across the face. Be especially cautious when changing directions on all slopes.

46. Operate your machine smoothly and at a ground speed slow enough to ensure complete control at all times. Avoid erratic operation and excessive speed.

47. Sharp turns on any terrain may cause loss of control. Reduce speed and use caution when making sharp turns.

48. Do not stop or start suddenly when going uphill or downhill. Avoid uphill starts. If machine is stopped going up a slope, turn the attachment off and back slowly down the slope keeping the machine in gear. Do not stop or change gears (speed) on slopes.

49. Know the terrain on which you are working. Find hidden obstacles by walking through and inspecting the area prior to operating your equipment in that area. Plainly mark obstacles, such as rocks, ruts or holes and stay well clear of these obstacles when operating.

50. While operating, stay alert for holes, rocks or roots, which may cause damage to equipment or upset. Keep at least 3 ft. away from drop-offs, ditches, creeks, culverts, washouts and public highways.

51. Exercise care when mowing around a fixed object to prevent the equipment or attachment from striking the object. When mowing never deliberately run over any foreign object.

52. Areas wet with dew, rain or snow will be more slippery than when dry. Areas covered with loose gravel are more slippery than firm dry ground. Greater stopping distances are required in these slippery areas.

53. Learn to expect changes in operating conditions. Adding or removing attachments or weight to your equipment will make your machine perform differently. Rain, snow, loose gravel, wet grass, etc., change the tractive conditions of the terrain requiring changes in your operating technique, which may include a decision not to operate on that terrain.

54. Use care when pulling loads or using heavy equipment.

A. Use only approved drawbar hitch points.

B. Limit loads to those you can safely control.

C. Do not turn sharply. Use care when backing.

D. Use counterweight(s) or wheel weights when suggested in operator's manual.

ATTACHMENT USE

55. When using attachments never direct discharge of material toward bystanders nor allow anyone near vehicle while in operation.

56. When using machine with mower:

A. Mow only in daylight or in good artificial light.

B. Never make a cutting height adjustment while engine is running if operator must dismount to do so.

C. Shut engine off and wait for all moving parts to stop before unclogging chute.

D. Check blade mounting bolts for proper tightness at frequent intervals.

57. Keep hands and feet away from rotating blade(s) underneath mower deck. Never place foot on ground when mower is engaged or when mower is in motion.

58. DO NOT operate mower attachment without the chute deflector or complete bagger in place.

59. Exercise care while maneuvering with grass catcher. Front to rear stability may change.

SAFE OPERATING REQUIREMENTS

MAINTENANCE

60. Keep all nuts, bolts, fasteners and screws tight to be sure equipment is in safe working condition and check them frequently. Repair or replace worn, damaged, distorted or broken parts as needed.

61. Keep vehicle and attachments in good operating condition and keep safety devices in place and working.

62. Under normal usage, grass catcher bag material is subject to deterioration and wear. It should be checked frequently to determine need for bag replacement.

63. Use only genuine Toro Wheel Horse replacement parts to ensure that original standards are maintained.

64. Shields, deflectors, switches, blade controls and other safety devices must be in their proper position and functional.

65. Do not operate without muffler or tamper with the exhaust system. Damaged mufflers or optional spark arrestors can create a fire hazard. Periodically inspect and replace if necessary.

66. If equipment begins to vibrate abnormally, disengage power to attachments and stop engine at once. Repair any damage before starting or continuing operation.

67. Periodically inspect all shafts, levers, friction devices and other moving parts subject to wear. Make required adjustment or replace these parts if damaged, distorted or broken, or as soon as wear affects the normal operation of the vehicle or attachment. DO NOT operate equipment that is not functioning properly.

⚠ WARNING: ⚠

The engine exhaust from this product contains chemicals known to the State of California to cause cancer, birth defects, or other reproductive harm.

OWNER REGISTRATION AND WARRANTY

Service and warranty assurance is as important to Toro Wheel Horse as it is to you, the owner. To facilitate warranty service at an Authorized Toro Wheel Horse Dealer, Toro Wheel Horse requires factory registration. A registration card is supplied with each new rider and attachment. **Either you or your dealer must fill in required information and mail the card to Toro Wheel Horse.**

Toro Wheel Horse Limited Warranty Statement is on a "hang tag" in the loose parts bag. This statement describes what items are covered by the Toro Wheel Horse Limited Warranty, your rights and obligations, and procedure to follow to obtain warranty service. Please familiarize yourself with the warranty statement. **All of us at Toro Wheel Horse want you to be satisfied with your Toro Wheel Horse rider; please don't hesitate to contact us for assistance.**

PARTS MANUAL

A separate parts manual is available for your Toro Wheel Horse equipment. To obtain a parts manual, write to:

The Toro Company
8111 Lyndale Avenue South
Bloomington, MN 55420–1196
Attn: Publications

BE SURE TO INCLUDE MODEL AND SERIAL NUMBER OF EQUIPMENT.

SAFETY DECALS AND INSTRUCTIONS

Safety decals and instructions are easily visible to the operator and are located near any area of potential danger. Replace any decal that is damaged or lost.

ON FRONT OF SEAT BODY
(Part No. 76–3920)

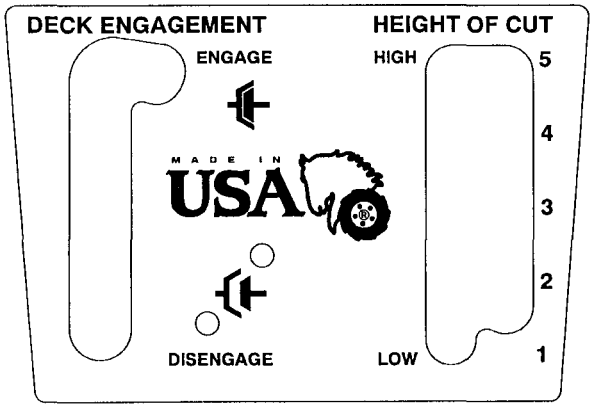

ON RIGHT SIDE OF SEAT BODY
(Part No. 67–1270)

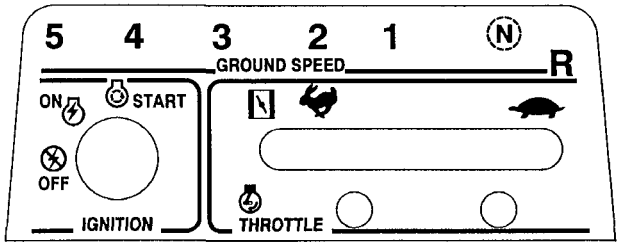

ON DEFLECTOR
(Part No. 54-9220)



ON CENTER CHANNEL
(Part No. 93–9499)

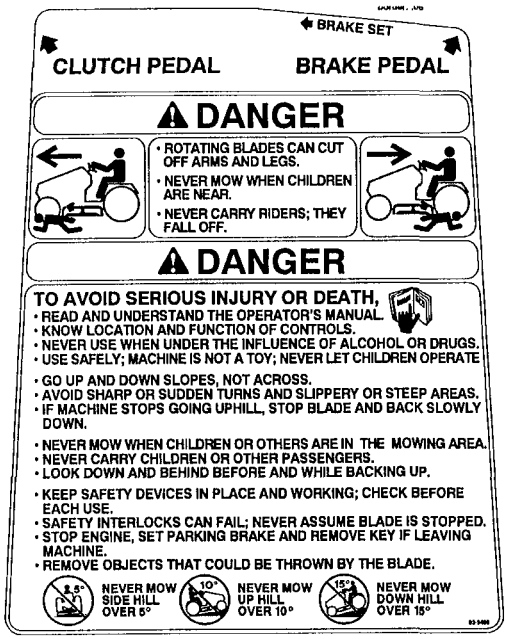

ON DECK
(Part No. 76–4070)



UNDER GRASS DEFLECTOR
(Part No. 68–3650)



SPECIFICATIONS

825 REAR ENGINE RIDER – ELECTRIC START, MODEL 70040

Briggs & Stratton Engine: Four cycle engine has output of 8 hp (6 KW) @ 3600 rpm and 12.7 ft/lb (17.2 N·m) torque @ 2500 rpm. Displacement is 19.44 cubic inches (319 cc). Crankcase oil capacity is approximately 36 oz. (1.06 l). Correct spark plug is a Champion RJ-19LM. Recommended spark plug air gap is 0.030 of an inch (0.762 mm).

Mower Housing: Full floating, stamped steel housing has spiral grass chamber, kickers, cover and ring. Width of cut is 25 inches (63.5 cm). Cast iron spindle housing with shaft is supported by sealed ball bearings. Blade pulley is driven by a belt from the engine pulley.

Cutter Blade: Single blade is 25 inches (63.5 cm) long, made of 7 gauge (2.72 mm) carbon steel and heat treated for hardness.

Blade Tip Speed: Tip speed of blade is 17,420 ft/min @ 3400 engine rpm.

Height–of–Cut Range: Adjustable to five approximate range settings: 1–1/2 inches to 3–1/2 inches.

Transmission: Transmission has five speeds forward and one for reverse. Heat treated, sintered metal gears are enclosed in a permanently lubricated (EP Lithium grease), die cast aluminum housing.

Differential: Sintered powdered metal bevel gears are enclosed in a permanently lubricated (Shell Epro 71030 grease), steel housing.

Traction Drive: Drive system has an "A" section v–belt from engine pulley to transmission input pulley. A no. 40 chain joins transmission output sprocket with differential sprocket.

Ground Speed @ 3500 Engine rpm:

1st gear	– 1.4 mph
2nd gear	– 2.1 mph
3rd gear	– 3.2 mph
4th gear	– 4.1 mph
5th gear	– 4.7 mph
Rev.	– 1.6 mph

Wheels and Tires: The front 11 x 4.00-5 and the rear 13 x 5.00-6 tubeless, pneumatic turf tires are installed on demountable stamped steel wheels. Recommended pressure for front and rear tires is 10–14 psi. All tires must be equally inflated to ensure a level cut.

Fuel Tank: Capacity is 4 quarts (3.7 l).

Steering: 13 inch (33 cm) diameter steering wheel.

Throttle Control: Control is located on right side of seat body. Hand–operated throttle control connects to and operates carburetor–mounted throttle and choke. Control has three positions: SLOW, FAST AND CHOKE.

Transmission Gear Shift: Single lever, in–line shifting with Z pattern.

Clutch Pedal: Foot–operated pedal is located at left front side of rider. Depressing clutch pedal moves idler pulley away from traction drive belt, which disengages the traction drive.

Brake Pedal: Foot operated pedal is located at right front side of rider. Depressing brake pedal engages a disk brake on side of transmission.

Parking Brake Control: Control is located at right front of center channel. Engage parking brake by moving control to the left while brake pedal is depressed; then release pedal. To disengage parking brake, push brake pedal down so parking brake lever moves back to its normal released position.

Blade Control: Control is mounted on front of seat body. Control has two positions: ENGAGE and DISENGAGE. Interlock switch prevents engine from starting when control is in the ENGAGED position. When control is in DISENGAGE position, the blade brake is applied and blade belt idler pulley is disengaged. By contrast, idler pulley is engaged with blade belt when control is in the ENGAGE position: blade brake is released.

Ignition Switch: Switch is located on right side of seat body. Switch has three positions: ON, OFF and START.

Height-Of-Cut Control: Control is mounted on front of seat body.

General Dimensions (approx):

Wheel Base	–41 in (104 cm)
Wheel Tread	–28 in (71 cm) front outside to outside
Overall Length	–52 in (132 cm)
Overall Height	–38 in (.97 m)
Overall Width	–32 in (81 cm)
Dry Weight	–305 lb (1.6 kg)

Specifications and design subject to change without notice.

LOOSE PARTS

Note: Carefully remove rider and other parts from carton. Use chart below to ensure all parts have been shipped.

DESCRIPTION	QTY	USE
Seat Clamp Washer Capscrew	1 1 4 4	Install Seat, page 9.
Steering Wheel Roll Pin Spacer	1 1 1	Install Steering Wheel, page9.
Bolt 1/4–20 x 3/4" Wingnut 1/4–20	2 2	Install Battery Cables, page 10.
Key	1	Use in ignition switch.
Operator's Manual	1	Read before operating rider.

SETTING UP INSTRUCTIONS

INSTALL SEAT

1. Position seat onto seat base, inserting seat switch cable thru slot and aligning mounting holes (Fig. 1).

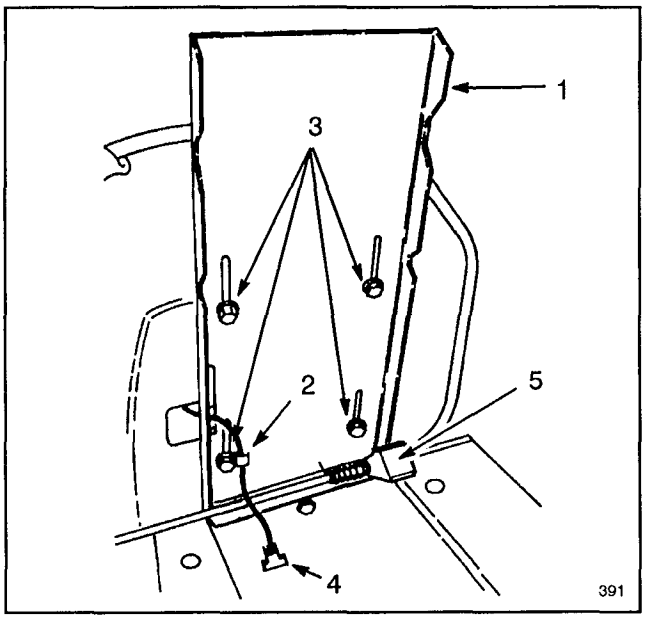

Figure 1

1. Seat base
2. Clamp
3. Capscrews & washers
4. Connectors
5. Seat prop latch

2. Slide wire clamp over seat switch wire (Fig. 1).

3. Using left front mounting slot in seat base, loosely secure wire clamp and seat to seat base with a capscrew and lockwasher (Fig. 1).

4. Mount seat to seat base with (3) remaining capscrews and lockwashers.

Note: Seat may be adjusted for operator comfort by positioning seat as desired in seat base slots.

5. Tighten all capscrews.

6. Insert seat switch connector into wire harness connector.

INSTALL STEERING WHEEL

1. Slip spacer onto steering shaft until groove in spacer fits over roll pin in shaft (Fig. 2).

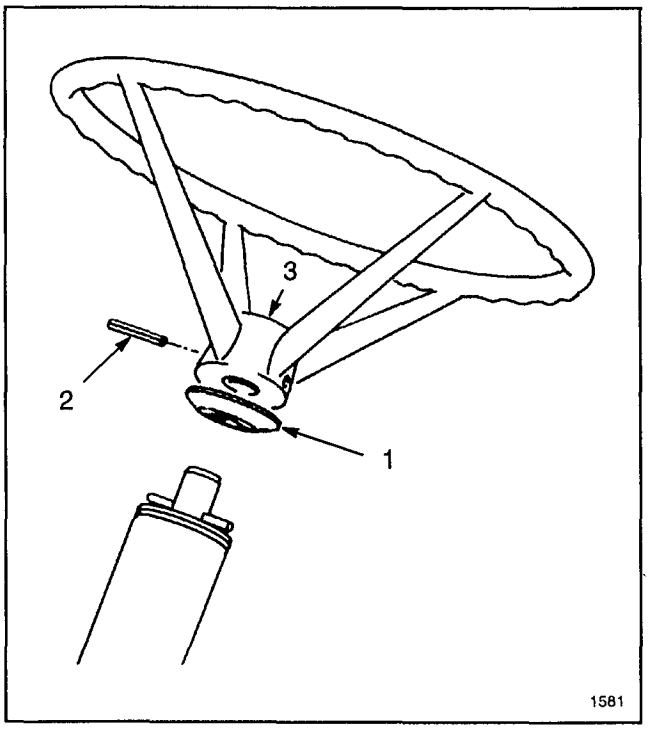

Figure 2

1. Spacer *2. Roll pin* *3. Steering wheel insert*

2. Slip steering wheel onto steering shaft, aligning the steering wheel mount hole with shaft mounting hole.

Note: Steering wheel insert (Fig. 2) should be readable from operator's position on rider with wheels turned straight ahead.

3. Insert a drift punch partially through the holes to maintain alignment and insert the roll pin in the opposite side.

4. Drive the roll pin in until flush with the outside of the steering wheel.

ACTIVATING AND CHARGING BATTERY

The battery must be removed from the rider so it can be filled with electrolyte and charged. Bulk electrolyte with 1.260 specific gravity must be purchased from a local battery supply outlet. Remove the battery and activate it as follows:

CAUTION

Wear safety goggles and rubber gloves when working with electrolyte. Charge the battery in a well ventilated place so gases produced while charging can dissipate. Since the gases are explosive, keep open flame and electrical spark away from the battery; do not smoke. Nausea may result if the gases are inhaled. Unplug charger from electrical outlet before connecting to or disconnecting charger leads from battery posts.

1. Remove wing nut securing battery hold downs to rider chassis (Fig. 3).

2. Remove battery from chassis and set it aside.

3. Remove filler caps from battery and slowly fill each cell until electrolyte is just above the plates. To obtain best results, let battery sit for 20 minutes. Then add electrolyte to the maximum capacity (fill ring).

4. Leave filler caps off and connect a 3-4 amp battery charger to battery posts. Charge battery at a rate of 4 amperes or less for 4 hours (12 volt).

IMPORTANT: Do not overfill battery. Electrolyte will overflow onto other parts and severe corrosion and deterioration will result.

5. When battery is charged, disconnect charger from electrical outlet and battery posts.

6. Slowly add electrolyte to each cell until level is up to fill ring. Reinstall filler caps.

Note: Once battery is in service, distilled water only should be added; never add more electrolyte.

7. Reinstall the battery with terminal posts toward the rear of the machine and vent tube thru hole in frame (Fig. 3).

8. Reinstall battery hold downs.

9. Reinstall the positive cable to the positive (+) terminal and the negative cable (black) to the negative (−) terminal of the battery and secure with capscrews and wing nuts (Fig. 3).

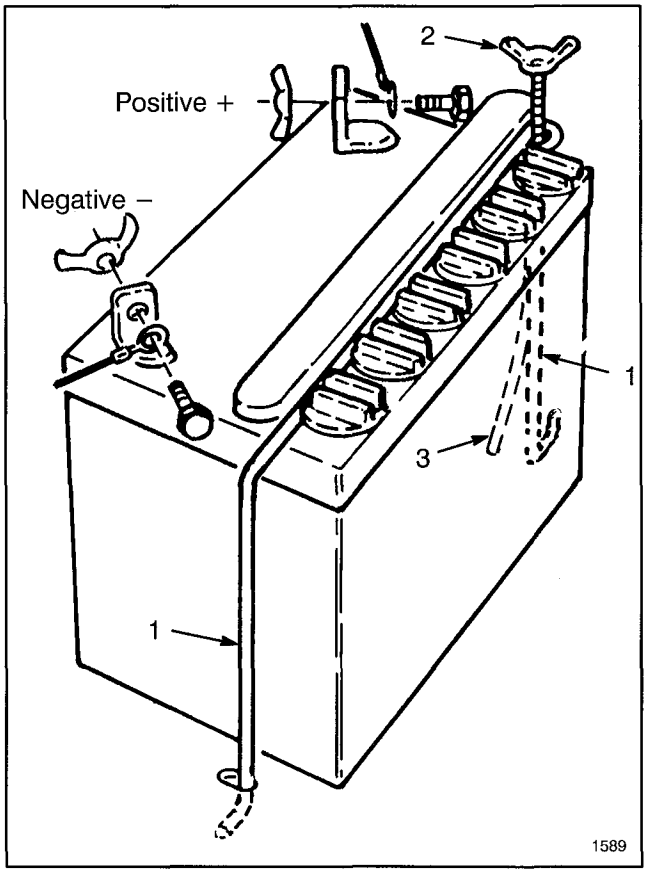

Figure 3

1. Battery hold down *2. Wing nut* *3. Vent tube*

FILL CRANKCASE WITH OIL

The rider is shipped from the factory without oil in the crankcase. Therefore, before trying to start engine, oil must be added to the crankcase.

IMPORTANT: CHECK OIL LEVEL EVERY TIME YOU FILL GAS TANK. Initially, change oil after the first 2 hours of operation; thereafter, under normal conditions, change oil after every 25 hours of operation. However, change oil more frequently when engine is operated in dusty or dirty conditions.

1. Move rider to a level surface to ensure accurate oil level reading and raise seat to expose oil dipstick.

2. Clean the area around oil dipstick so foreign matter cannot enter fill tube when plug is removed.

3. Remove dipstick from fill tube (Fig. 4).

4. Crankcase capacity is approx. 36 oz. (1.06 l). Amount of oil required to fill crankcase may be less than 36 oz. due to oil remaining in engine. **DO NOT OVERFILL.**

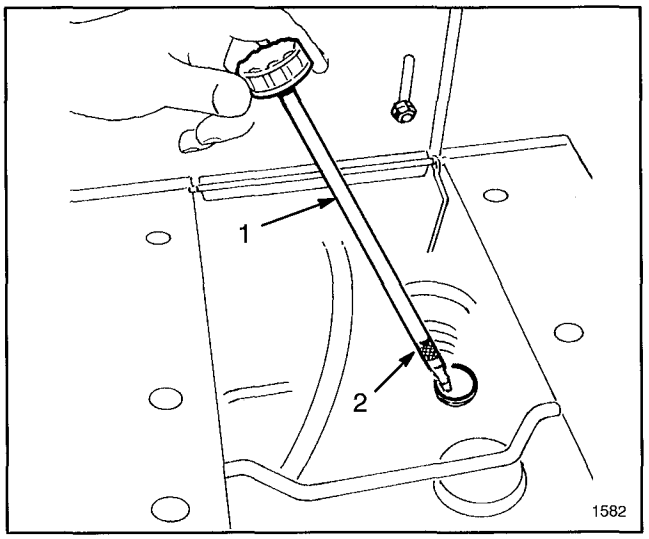

Figure 4

1. Dipstick plug *2. Full mark*

5. Slowly pour oil into crankcase (Fig. 4). The engine uses any high quality detergent oil having the American Petroleum Institute — API — "service classification" SF or SG. Oil viscosity — weight — must be selected according to anticipated ambient temperature.

   A. Above +40°F — Use SAE 30.

   B. 0°F to 100°F — Use SAE 10W–30.

   C. Below +20°F — Use SAE 5W–30. DO NOT USE SAE 10W40 OIL.

6. Rock the rider gently to release any air that may be trapped in crankcase. Screw dipstick fully into fill tube; then remove it and make sure that oil level is up to FULL mark on dipstick (Fig. 4). If level is low, add only enough oil to bring level up to FULL mark.

7. Install dipstick into fill tube. Wipe up any oil that may have spilled.

FILL FUEL TANK WITH GASOLINE

DANGER

Because gasoline is flammable, caution must be used when storing or handling it. Do not fill fuel tank while engine is running, hot or when machine is in an enclosed area. Vapors may build up and be ignited by a spark or flame source many feet away. DO NOT SMOKE while filling the fuel tank to prevent the possibility of an explosion.

Always fill fuel tank outside and wipe up any spilled gasoline before starting engine. Use a funnel or spout to prevent spilling gasoline, and fill tank to about 1/2 inch (13 mm) below the filler neck. Store gasoline in a clean, safety–approved container and keep the cap in place on container. Keep gasoline in a cool, well-ventilated place; never in an enclosed area such as a hot storage shed. To ensure volatility, do not buy more than a 30 day supply of gasoline.

Gasoline is a fuel for internal combustion engines; therefore, do not use it for any other purpose. Since many children like the smell of gas, keep it out of their reach because the fumes are explosive and dangerous to inhale.

THE TORO COMPANY STRONGLY RECOMMENDS THE USE OF CLEAN, FRESH **UNLEADED** REGULAR GASOLINE IN TORO GASOLINE POWERED PRODUCTS. UNLEADED GASOLINE BURNS CLEANER, EXTENDS ENGINE LIFE, AND PROMOTES GOOD STARTING BY REDUCING THE BUILD-UP OF COMBUSTION CHAMBER DEPOSITS. LEADED GASOLINE CAN BE USED IF UNLEADED IS NOT AVAILABLE.

Toro also recommends that Toro Stabilizer/Conditioner be used regularly in all Toro gasoline powered products during operation and storage seasons. Toro Stabilizer/Conditioner cleans the engine during operation and prevents gum–like varnish deposits from forming in the engine during storage.

NOTE: NEVER USE METHANOL, GASOLINE CONTAINING METHANOL, GASOHOL CONTAINING MORE THAN 10% ETHANOL, PREMIUM GASOLINE OR WHITE GAS BECAUSE ENGINE FUEL SYSTEM DAMAGE COULD RESULT.

BEFORE OPERATING

DO NOT USE FUEL ADDITIVES OTHER THAN THOSE MANUFACTURED FOR FUEL STABILIZATION DURING STORAGE SUCH AS TORO'S STABILIZER/CONDITIONER OR A SIMILAR PRODUCT. TORO'S STABILIZER/CONDITIONER IS A PETROLEUM DISTILLATE BASED STABILIZER/CONDITIONER. TORO DOES NOT RECOMMEND STABILIZERS WITH AN ALCOHOL BASE SUCH AS ETHANOL, METHANOL OR ISOPROPYL. STABILIZERS SHOULD NOT BE USED TO TRY TO ENHANCE THE POWER OR PERFORMANCE OF MACHINE.

1. Clean area around fuel tank cap so foreign matter cannot enter tank when cap is removed.

2. Remove cap from fuel tank and fill tank with unleaded regular gasoline. Then reinstall fuel tank cap.

3. Wipe up any gasoline that may have spilled.

CONTROLS

Gear Shift (Fig. 5)—The transmission has five forward speeds, neutral, and reverse. The gear shift lever is located on right side of operator. An interlock switch, which prevents engine from being started when transmission is in gear, is mounted on top of transmission.

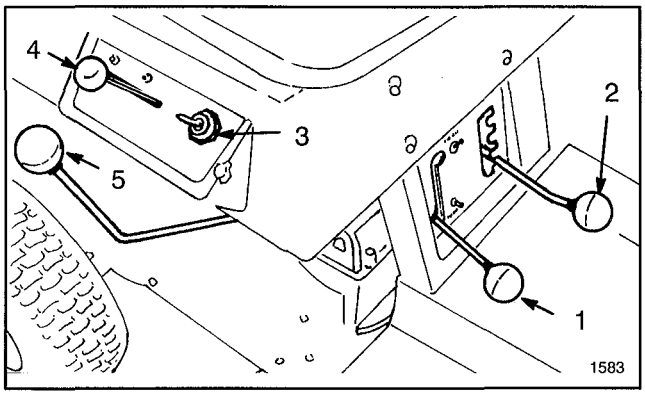

Figure 5

1. Blade control
2. Height–of–cut control
3. Ignition switch
4. Throttle control
5. Gear shift

Clutch Pedal (Fig. 6)—Foot–operated clutch pedal is used in conjunction with gear shift. Depress clutch pedal fully when shifting gears. Depress clutch pedal whenever brake is used.

Brake Pedal (Fig. 6)—Foot–operated brake pedal must be depressed to slow down or stop the rider. When pedal is depressed, a caliper engages the brake disc on the side of the transmission. Always depress clutch pedal when using brake.

Parking Brake (Fig. 6)—Parking brake must be used in conjunction with brake pedal. When pedal is depressed and end of parking brake lever holds brake pedal in depressed position, a caliper engages the brake disc at side of transmission.

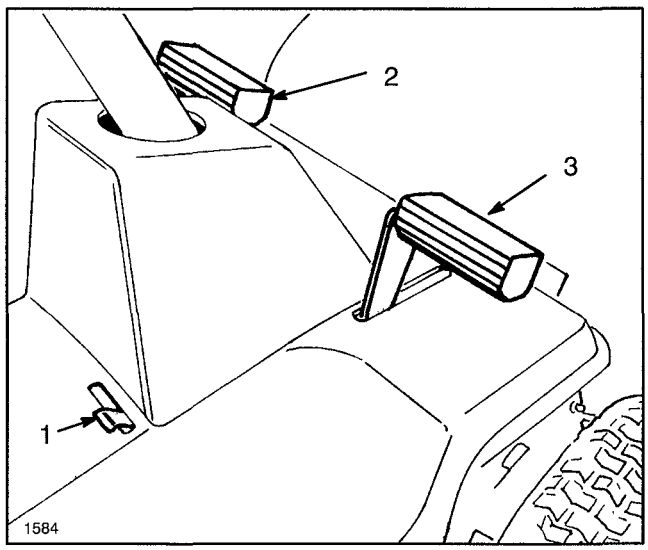

Figure 6

1. Parking brake
2. Clutch pedal
3. Brake pedal

Blade Control (Fig. 5)—Blade control engages and disengages the cutter blade. An interlock switch prevents engine from starting when control is in the ENGAGE position. Engine will start when control is in the DISENGAGE position only.

Throttle Control (Fig. 5)—Throttle control connects to and operates carburetor–mounted throttle and choke. Control has three positions: SLOW, FAST and CHOKE.

Height–of–Cut (Fig. 5)—Height–of–cut control varies the cutting height from approx. 1–1/2 to 3–1/2 inches in five increments.

Ignition Switch (Fig. 6)—Switch has three positions: ON, OFF and START.

STARTING AND STOPPING INSTRUCTIONS

Note: Make sure wire is installed on spark plug, battery is activated, and cables are installed on battery posts.

1. Engage the parking brake (Fig. 6): refer to using Parking Brake, page 13.

2. Move gear shift into neutral and blade control into DISENGAGE detent (Fig. 5).

Note: An interlock switch on the transmission and blade control prevents engine from starting unless the operator is sitting on the seat, the gear shift is in neutral and the blade control is in the DISENGAGE detent.

3. Move throttle control to CHOKE position (Fig. 5) when starting a cold engine. However, a hot engine requires no choking. Move throttle to FAST position for starting.

4. Rotate ignition key (Fig. 5) to START position. When engine starts, release the key and move throttle between FAST and SLOW if choke was used for starting. Operate the rider with throttle control in FAST (full throttle) position for best performance.

TO STOP

1. To stop the engine, depress clutch pedal, shift into neutral and engage parking brake. Move blade control into DISENGAGE detent, move throttle control to SLOW and allow engine to idle a short period before rotating ignition key to OFF. Rotate ignition key to OFF and wait for all moving parts to stop before getting off the seat.

OPERATING INSTRUCTIONS

BREAK-IN

The engine requires no special break-in other than checking the oil level each time you fill the gas tank and changing the oil after the first two hours of operation. Some oil consumption will be noticed during break in, but will improve as used. Operate the transmission in all gears to ensure that the drive system is functioning correctly. After the first five hours of operation, check the condition and adjustment of the drive chain and belts.

USING PARKING BRAKE

CAUTION

If the engine stalls or must be stopped while operating on a hill or slope, the engine must be shut off and parking brake engaged.

1. Depress brake pedal fully.

2. Move parking brake control to the left and release brake pedal until it contacts end of parking brake lever (Fig. 6).

3. To release the parking brake, depress brake pedal (Fig. 6), which will allow parking brake lever to return to its disengaged position. Then release brake pedal.

IMPORTANT: Disengage parking brake before shifting into gear to commence operation. If the rider is driven when parking brake is engaged, accelerated brake wear will result.

ADJUSTING HEIGHT-OF-CUT

The height-of-cut may be set in one of five positions: 1-1/2 inches to 3−1/2 inches.

1. Move blade control into DISENGAGE detent (Fig. 5).

2. Move height-of-cut control (Fig. 5) into desired setting.

3. To engage blade for cutting, slowly move blade control into ENGAGE detent.

OPERATING PROCEDURE

1. Move blade control into DISENGAGE detent.

2. Start the engine: refer to Starting/Stopping Instructions, page 13.

IMPORTANT: When rider is used for the first time, operate the transmission in all gears to ensure that drive system is functioning correctly and become familiar with the controls and operating characteristics. Also check condition of the drive chain and belts and make any adjustments that may be required.

3. Depress clutch pedal and shift transmission into 1st gear. Then release pedal slowly until traction drive engages.

IMPORTANT: To avoid a jerky start and putting a heavy load on the transmission, move throttle to slow speed and release clutch pedal slowly. If shifting into reverse gear is difficult, jog clutch pedal in and out to get gears to mesh. Do not force the gear shift because damage may result. Should you encounter a jerking or grabbing condition during operation, contact your local Authorized TORO Service Dealer for assistance.

4. To engage blade for cutting, move height−of−cut control to the desired setting. Move the throttle to FAST position. Start the blade whirling by slowly moving blade control into ENGAGE detent.

OPERATING INSTRUCTIONS

WARNING

To avoid loss of control, always come to a complete stop before shifting gears, and slow down when turning, backing and changing direction. Look behind the rider to ensure area is clear before backing.

5. To stop engine, in sequence, depress clutch and brake pedals, move blade control into DISENGAGE detent, gear shift into neutral, and throttle to SLOW; rotate key to OFF position after allowing engine to idle a short period of time.

INSTALLING DISCHARGE COVER (Fig. 7)

When you do not want to bag clippings or side discharge, the plastic discharge cover must be installed under the grass deflector.

WARNING

Turn engine off and wait for all moving parts to stop. Remove spark plug wire from spark plug.

1. Lift grass deflector and position plastic discharge cover over long bolt.

2. Place metal tab on long bolt as shown in Figure 7.

3. Lower grass deflector and make sure edge of deflector is secured under metal tab.

4. Using the wing nut, tighten securely the metal tab, grass deflector and plastic discharge cover in place.

WARNING

The metal tab must be used to fasten the grass deflector to the plastic discharge cover. If the grass deflector is not fastened securely to the discharge cover, the discharge cover could come loose during operation and discharged material could cause personal injury.

NOTE: If the plastic discharge cover is ever removed in order to side discharge or bag, be sure to save the metal tab with the plastic discharge cover for possible future reinstallation.

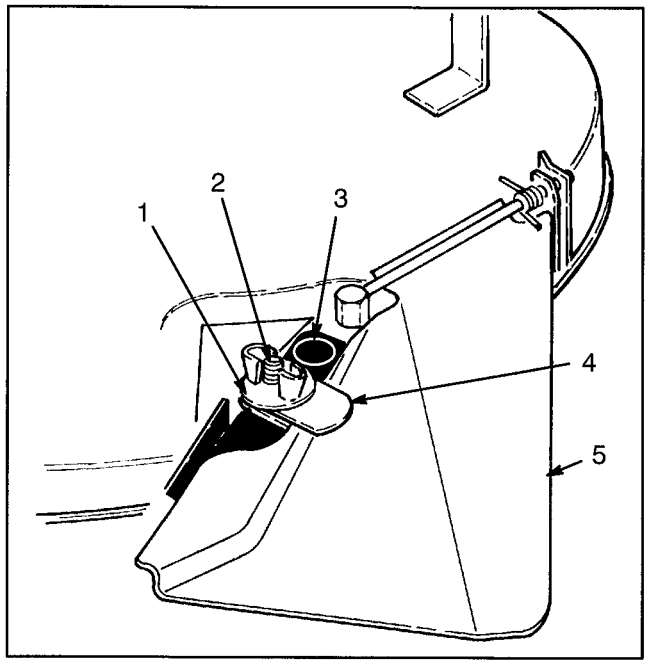

Figure 7

1. *Wing nut*
2. *Long bolt*
3. *Plastic discharge cover*
4. *Metal tab*
5. *Grass deflector*

SIDE DISCHARGING OR BAGGING

To side discharge or use bagging attachment, remove the wingnut and metal tab securing the plastic discharge cover to the grass deflector and mower housing. **NEVER REMOVE THE GRASS DEFLECTOR FROM THE MOWER HOUSING (Fig. 8).** Save the discharge cover, wingnut and metal tab for possible future reinstallation.

If you no longer wish to side discharge or bag clippings, the discharge cover can be reinstalled by securing it the mower housing and grass deflector with the wingnut and metal tab.

IMPORTANT: When the discharge cover is in place, it **must** be secured to the grass deflector with the metal tab and wingnut.

GRASS DEFLECTOR

WARNING

NEVER remove the grass deflector (Fig. 8) from the mower housing. If the discharge cover under the grass deflector is removed in order to side discharge or bag, the grass deflector routes discharged material down toward the turf. If the deflector is ever damaged, replace it. Without the deflector or complete grass catcher assembly mounted in place, discharged material could cause personal injury or blade contact could occur.

RECYCLER® RIDER TIPS

RECYCLER® RIDER FEATURES

Your Toro Recycler® rider has a new and completely different cutting concept. It leaves your lawn with a bagged look without bagging clippings.

The rider is equipped with special parts (Fig. 8) which increase your rider's ability to cut and recut grass clippings, leaves, and other yard debris into tiny particles which are injected down into the grass. These parts are:

- Deck ring
- Special blade
- Discharge cover
- Four special "kickers" positioned on the underside of the mower deck in strategic positions. (A fifth kicker is molded into the discharge cover.)

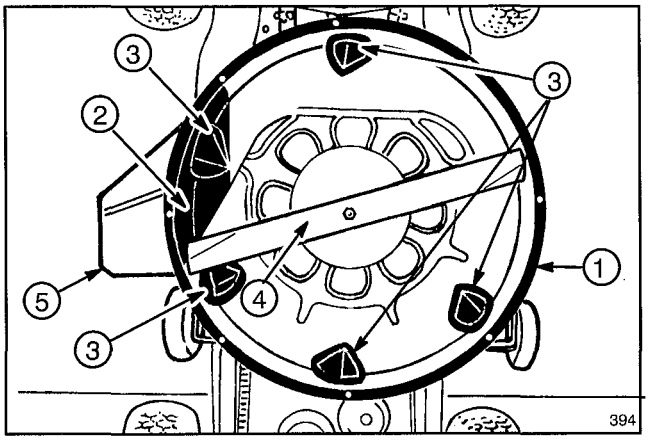

Figure 8

1. *Deck ring*
2. *Discharge cover*
3. *Kickers*
4. *Blade*
5. *Grass deflector*

TIPS FOR CUTTING GRASS

Even with the Recycler® rider, you may encounter conditions where it is not possible to incorporate all of the grass clippings or leaves all of the time into the grass. Follow these instructions for the best cutting results and lawn appearance:

- Always use FAST (full) throttle when mowing.

- Maintain a **sharp blade** throughout the cutting season. A sharp blade cuts cleanly and without tearing or shredding the grass blades like a dull blade. Tearing and shredding causes the grass to turn brown at the edges which impairs growth and increases susceptibility to diseases. About every 30 days, remove the wire from the spark plug and check the cutter blade for sharpness. File down any nicks on blade to restore its sharp edge.

- Clean any residue from the underside of the rider housing and kickers after each use. If residue is allowed to build up in rider housing and on kickers, cutting performance may be unsatisfactory.

- Very long or extremely wet grass can be cut, but specific operating techniques must be used. Start by setting height–of–cut in the highest position. Using 1st gear and maximum throttle speed, move into the grass and cut a swath that is only half as wide as the mower housing. If side discharging, direct grass clippings toward area that was cut previously. Stop forward movement occasionally to allow discharge area to clear itself. Cutting too much grass may clog the mower housing and discharge area. If mower housing does clog, shut engine off, disengage blade and remove the obstruction with a stick.

DANGER

Before removing any obstruction from mower housing, move blade control into DISENGAGE detent, depress clutch and brake pedals, shift into neutral and turn ignition key to OFF position. Remove wire from spark plug to prevent the possibility of accidental starting.

- When the rider is used to cut a lawn for the first time, cut grass slightly longer than normal to ensure that cutting height of mower housing will not cause scalping, which could result from severe undulations of the ground. In general, however, the cutting height used in the past is probably the best one to use. When cutting grass over six inches tall, you may want to cut the lawn twice to hide clippings down in the grass.

- If the grass is ever allowed to grow slightly longer than normal, or if it contains a high degree of moisture, raise cutting height higher than usual and cut the grass at this setting. Next, cut the grass again using the lower, normal setting. This method of cutting long grass results in an even distribution of clippings and an acceptable quality–of–cut.

- In the heat of the summer, it is best to cut only about 1/3 of the grass blade. Cutting below the 3rd setting is not recommended unless grass is sparse or it is late fall when grass growth begins to slow down.

- If the cutting width of the rider is wider than the mower previously used, raise height-of-cut setting one notch to ensure undulations in turf are not cut too short.

- MOWING IN EXTREME CONDITIONS—Air is required to cut and recut grass clippings in rider housing, so do not set height–of–cut too low or totally surround housing by uncut grass. Always try to have one side of the rider housing free from uncut grass, allowing air to be drawn into housing. When making an initial cut thru center of uncut area, operate rider at a slower speed and back up if rider starts to clog.

RECYCLER® RIDER TIPS

- STOPPING RIDER—If forward motion of rider has to be stopped while cutting, a clump of grass clippings may be deposited on lawn. Follow this procedure for stopping while cutting:

A. With blade engaged, move onto a previously cut area.

B. Raise deck one or two height–of–cut settings while driving rider forward and deck is in operation.

C. Depress clutch and brake pedals, move throttle control lever to SLOW position, disengage mower and rotate ignition key to OFF.

- MOW AT PROPER INTERVALS—Under most normal conditions you'll need to mow approximately every 4–5 days. But remember, grass grows at different rates at different times. This means that in order to maintain the same height–of–cut, which is a good practice, you'll need to cut more frequently in early spring; as the grass growth rate slows in mid summer, cut only every 8–10 days. If you are unable to mow for an extended period due to weather conditions or other reasons, mow first with the height–of–cut at a high level; then mow again 2–3 days later with a lower height setting.

- Alternate mowing direction. This helps disperse clippings over lawn for even fertilization.

- SIDE DISCHARGING OR BAGGING—To side discharge or use bagging attachment, remove the wingnut and metal tab securing the plastic discharge cover to the grass deflector. **NEVER REMOVE THE GRASS DEFLECTOR FROM THE MOWER HOUSING.**

WARNING

Never remove the grass deflector (Fig. 8) from the mower housing. If the discharge cover under the grass deflector is removed in order to side discharge or bag, the grass deflector routes discharged material down toward the turf. If the deflector is ever damaged, replace it. Without the deflector or complete grass catcher assembly mounted in place, discharged material could cause personal injury or blade contact could occur.

The Recycler® rider's special features reduce clipping size, thus decreasing amount of grass to be disposed of and number of times bagger will have to be emptied.

Note: When bagger is full, mower will begin to inject clippings down into the grass.

If the lawn appearance is not satisfactory after mowing, try one of the following:

- Sharpen the blade.
- Raise the height–of–cut setting on your mower.
- Cut your grass more frequently.
- Overlap cutting swaths instead of cutting a full swath with each pass.
- Mow across the marginal areas a second time.

TIPS FOR CUTTING LEAVES

In the fall, you can cut your leaves up into finely cut particles and inject the particles down into the grass. When spring arrives, the leaf particles will have decomposed and restored valuable nutrients to the soil.

- When cutting is complete, always be sure that 50% of the lawn shows through the finely cut leaf cover. This may require one or more passes over the leaves.
- If there are more than five inches of leaves on lawn, raise the deck one or two notches higher. This makes it easier to feed leaves under mower deck.
- If leaves are not cut up finely enough to be hidden down in the grass, make a second pass 90° to the first pass.
- If you cut up a lot of oak leaves, you might want to add lime to your grass in the spring. Lime reduces the acidity of oak leaves.

MAINTENANCE INTERVAL CHART

	2 Hour	25 Hours	Storage Service	Spring Service	2 Years	Notes
Change Oil (Initial)	X					
Change Oil (Periodic)		X	X			
Check Safety Interlock	X	X		X	X	Before each use
Check Cutter Blade	X	X	X			
Check Brake	X		X	X		
Grease Front Axle Spindles		X	X			More often
Lubricate Pivot Points		X	X			in dusty,
Service Air Cleaner		X	X			dirty,
Check Spark Plug		X	X	X		conditions.
Check Blade Drive Belt			X			
Check Traction Drive Belt			X			
Check Drive Chain	X	X	X			More often
Drain Gasoline			X			in dusty,
Clean Outside of Engine		X	X			dirty,
Clean Mower Housing	X		X			conditions.
Clean Blower Screen On Engine		X	X	X		
Paint Chipped Surfaces			X			
Replace Interlock Switches					X	

MAINTENANCE

CAUTION

To prevent accidental starting of the engine while performing maintenance, shut engine off, remove key from ignition switch and pull wire off spark plug (Fig. 9). Make sure wire does not contact plug accidentally.

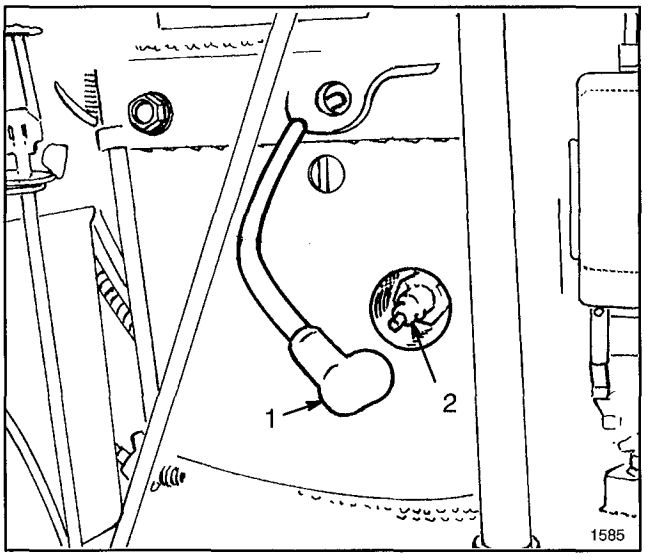

Figure 9

1. Spark plug wire *2. Spark plug*

MAINTENANCE

GREASE FRONT AXLE SPINDLES AND WHEELS

The front axle spindles and wheels must be lubricated after every 25 hours of operation; however, lubricate more frequently when conditions are dusty or sandy.

1. Wipe grease fittings on spindles and wheels (Fig. 10) with a clean rag. If there is paint on front of fittings, scrape it off.

2. Lubricate both axle spindles w/No. 2 general purpose grease (Fig. 10). Continue to pump grease until it oozes out the spindle. Wipe up any excess grease.

3. Lubricate both front wheels w/No. 2 general purpose grease (Fig. 10). Pump grease gun about four times. Wipe up any excess grease.

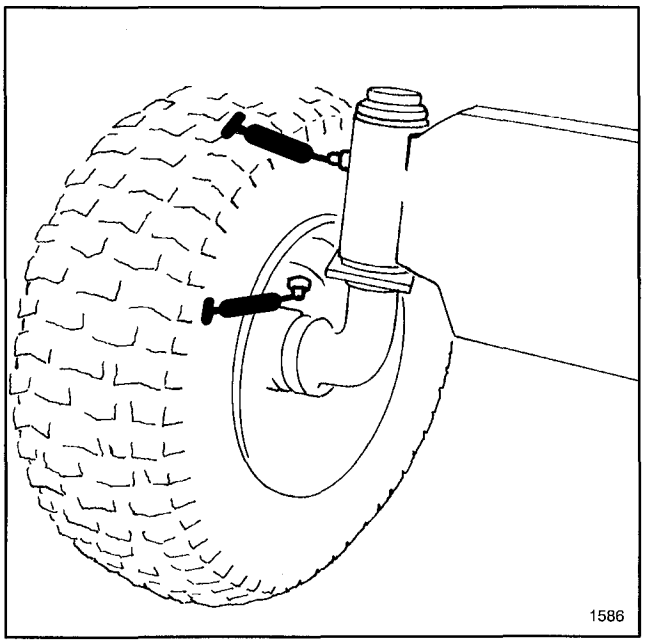

Figure 10

GREASE REAR AXLES

The rear wheels should be removed and axles greased once a year to prevent the formation of rust and to simplify future wheel removal.

LUBRICATE PIVOT POINTS

The mechanical pivot points on the rider must be lubricated after every 25 hours of operation; however, lubricate more frequently when conditions are dusty or sandy.

IMPORTANT: To lubricate all the mechanical pivot points, the rider must be tipped on its rear end. However, before the rider is tipped, drain all gasoline from fuel tank and oil from crankcase. Also remove battery so acid does not spill on the rider.

1. Drain gasoline from fuel tank: refer to Draining Gasoline From Fuel Tank, page 19.

2. Drain oil from crankcase: refer to Changing Crankcase Oil, steps 1-6, page 19.

3. Remove battery from chassis: refer to Activating and Charging Battery, page 10.

4. Shift transmission into 1st gear and engage parking brake.

5. Tip rider up and onto its rear end.

6. Remove mower housing from rider chassis: refer to Removing/Installing Mower Housing, steps 1-10, page 22.

7. Lubricate all mechanical pivot points on rider and mower housing with light oil.

8. Install mower housing onto rider chassis: refer to Removing/Installing Mower Housing, page 22.

9. Tip rider back to its normal operating position.

10. Fill crankcase with oil: refer to Fill Crankcase With Oil, page 11.

11. Fill fuel tank with gasoline: refer to Fill Fuel Tank With Gasoline, page 11.

12. Install the battery: refer to Activating and Charging Battery, page 10.

SERVICING AIR CLEANER

The air cleaner must be cleaned after every 25 hours engine operation if engine is operated in clean air conditions. However, element must be cleaned every few hours if operating conditions are extremely dusty or sandy.

1. Remove wire from spark plug.

2. Unsnap and lift air cleaner cover off carburetor (Fig. 11).

3. Remove foam element (Fig. 11). Examine element for dirt or discoloration and clean if necessary.

4. Clean element as follows:

A. Wash foam element in solution of liquid detergent and water to remove dirt. Rinse thoroughly in clear water.

B. Wrap the element in cloth and squeeze it dry. Do not twist the element or it may tear.

C. Apply approximately 5 teaspoons (25 ml) of oil to the element, work the oil in until the whole element is impregnated and squeeze the element thoroughly to remove all excess oil.

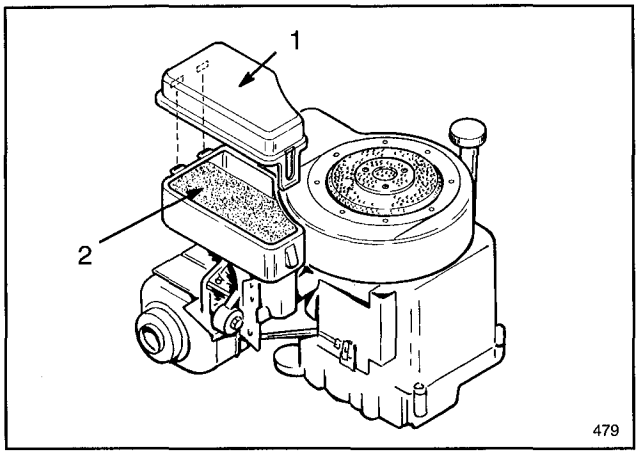

Figure 11

1. Cover *2. Foam element*

5. Reinstall air cleaner foam element and snap cover back on carburetor.

IMPORTANT: Do not operate engine with air cleaner element removed or engine damage will result.

CLEANING COOLING SYSTEM

Clean cooling system frequently. Remove build–up of grass, dirt or other debris from the cylinder and cylinder head cooling fins, air intake screen on flywheel end, and carburetor–governor levers and linkage. This will help ensure adequate cooling and correct engine speed and reduce the possibility of overheating and mechanical damage.

CHANGING CRANKCASE OIL

Check oil level every time you fill gas tank. Change oil after the first 2 hours of operation; thereafter, under normal conditions, change oil after every 25 hours of engine operation. However, change oil more frequently when engine is operated in dusty or sandy conditions. If possible, run engine just before changing oil because warm oil flows better and carries more contaminants than cold oil.

1. Position rider on a level surface so oil drains completely and a true reading results when crankcase is refilled.

2. Stop engine and pull wire off spark plug (Fig. 9).

3. Move blade control into DISENGAGE detent and set height–of–cut in lowest position.

4. Clean area around drain plug. Next, put a shallow drain pan under rider to catch the oil.

5. Remove drain plug (Fig. 12).

6. When oil is drained completely, reinstall drain plug and wipe up any oil that may have spilled.

7. With rider parked on a level surface, fill crankcase with oil: refer to Fill Crankcase With Oil, page 11.

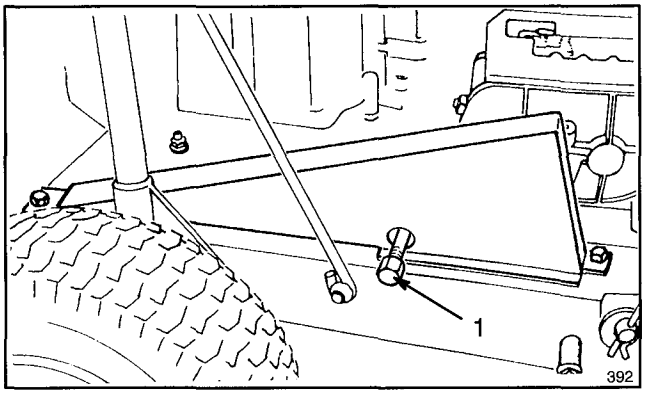

Figure 12

1. Drain plug

DRAINING GASOLINE FROM FUEL TANK

CAUTION

Since gasoline is highly flammable, drain it outdoors and make sure engine is cool to prevent a potential fire hazard. Wipe up any gasoline that may have spilled. Do not drain gasoline near any open flame or where gasoline fumes may be ignited by a spark. Do not smoke a cigar, cigarette, or a pipe when handling gasoline.

IMPORTANT: When the rider is tipped, all gasoline must be drained from the fuel tank.

1. Clean around fuel tank cap so foreign matter cannot enter filler hole when cap is removed. Next, remove cap from fuel tank (Fig. 13).

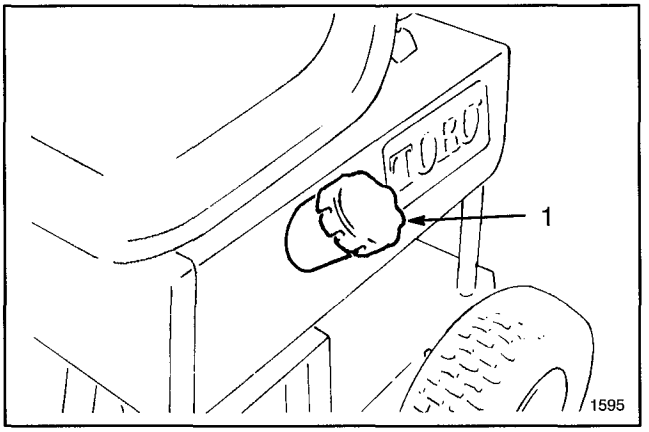

Figure 13

1. Fuel tank cap

2. Using a pump-type syphon, drain gasoline into a clean gas can.

Note: There is no other recommended way to drain gasoline from the fuel tank, other than by using a pump-type syphon. An inexpensive syphon can be purchased at a hardware store.

MAINTENANCE

REPLACING SPARK PLUG

Since air gap between center and side electrodes of the spark plug increased gradually during normal operation of the engine, check condition of electrodes after every 25 operating hours. Recommended air gap is 0.030 of an inch (0.762 mm). Correct spark plug to use:

Champion RJ-19LM

Note: The spark plug usually lasts a long time; however, the plug should be removed and checked whenever the engine malfunctions.

1. Clean area around spark plug so foreign matter cannot fall into cylinder when spark plug is removed.

2. Pull wire off spark plug and remove plug from cylinder head.

3. Check condition of side electrode, center electrode, and center electrode insulator to ensure there is no damage.

IMPORTANT: A cracked, fouled, dirty or defective spark plug must be replaced. Do not sand blast, scrape, or clean electrodes by using a wire brush because grit may eventually release from the plug and fall into the cylinder. The result is usually a damaged engine.

4. Set air gap between center and side electrodes at 0.030 of an inch (0.762 mm) (Fig. 14). Install correctly gapped spark plug w/gasket seal, and tighten plug to 15 ft-lb (20.4 N.m). If a torque wrench is not used, tighten plug firmly.

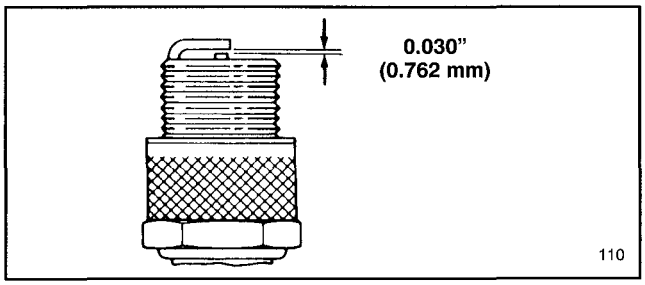

Figure 14

5. Push wire onto spark plug but do not leave key in the ignition. This will prevent accidental starting when mower is being stored between use periods. Keep key in a memorable place so it is not lost.

ADJUSTING THROTTLE/CHOKE CONTROL

To ensure that choke and carburetor-mounted throttle are operating properly, the throttle control must be adjusted correctly. Hard starting may be an indication of an incorrect adjustment. If throttle control is ever replaced, adjustment is also necessary. Before the carburetor is adjusted, ensure that throttle control is operating properly.

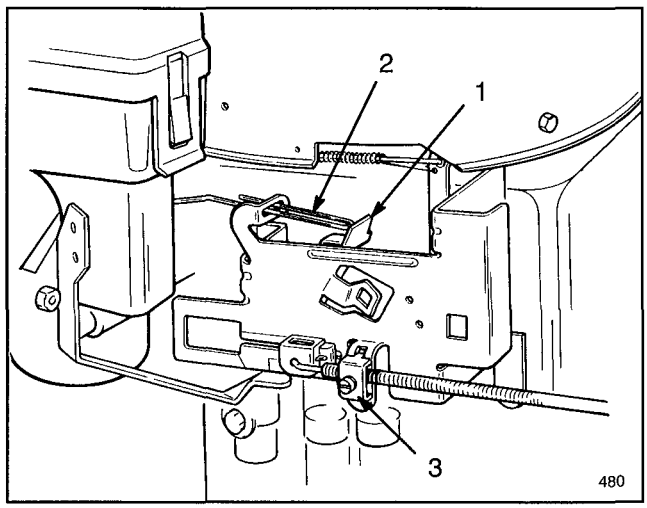

Figure 15

1. Throttle lever 2. Choke link 3. Throttle cable clamp

1. Move throttle control lever to FAST detent position.

2. The throttle lever should be just touching the choke link (Fig. 15); if they are not in this position, an adjustment is necessary:

A. Place remote control lever in FAST position.

B. Loosen the throttle cable clamp screw (Fig. 15) and move the control cable casing and wire until the throttle lever touches choke link.

C. Tighten the cable clamp screw. Move control to SLOW then back to FAST to ensure proper adjustment. Repeat procedure if necessary.

ADJUSTING CARBURETOR

The carburetor has been set at the factory, but an occasional adjustment may be required. However, do not make unnecessary carburetor adjustments because factory settings are usually correct. An adjustment may be required to compensate for differences in fuel, temperature, altitude and load.

IMPORTANT: Before the carburetor is adjusted, throttle control must be checked for proper operation: refer to Adjusting Throttle/Choke Control, page 20.

1. Gently turn idle mixture valve clockwise until it **just** closes (Fig. 16). Turning valve in too far may cause damage.

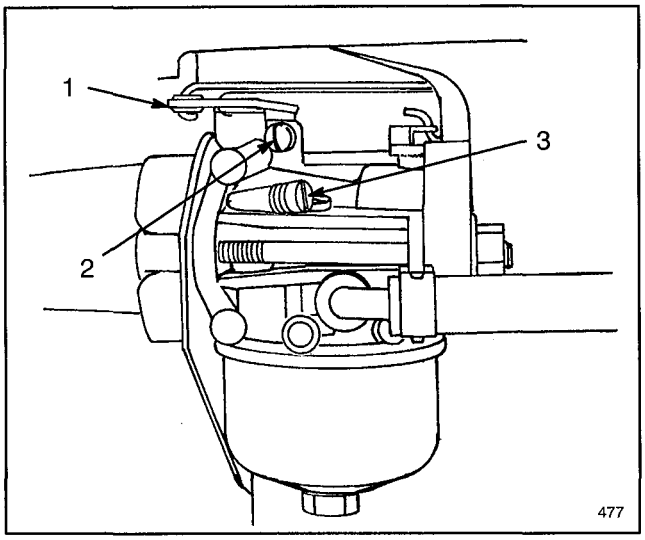

Figure 16

1. Throttle
2. Idle speed adjusting screw
3. Idle mixture valve

2. Open idle mixture valve one turn counterclockwise. This initial adjustment will permit the engine to be started and warmed up (approximately 5 minutes) prior to final adjustment.

WARNING

Engine must be running so final adjustment of the carburetor can be performed. To guard against possible personal injury, move blade control into DISENGAGE detent, shift into neutral, and engage parking brake. Keep hands, feet, face, and other parts of the body away from the cutter blade, underside of mower housing and the discharge area.

3. Start engine and move throttle control to SLOW position.

4. Rotate throttle (Fig. 16) counterclockwise and hold against idle speed adjusting screw (Fig. 16) while turning idle speed adjusting screw to obtain 1750 RPM.

5. While still holding throttle against idle speed adjusting screw, turn idle mixture valve in (lean) and out (rich) slowly until engine idles smoothly. Recheck idle RPM and readjust if required.

6. Release throttle. Engine should accelerate smoothly. If it does not, carburetor should be readjusted, usually to a slightly richer mixture.

7. After carburetor is adjusted, shut engine off. If mower will not be used immediately, remove key from switch to prevent possibility of accidental starting.

SERVICING CUTTER BLADE

WARNING

Check cutter blade every time rider is tipped on end. If bolt holding blade is loose, tighten it to 45–60 ft–lb. If blade or sail (Fig. 18) at end of blade is worn, eroded, or cracked, replace the blade. Replace the blade if it is bent or out–of–balance. Always use genuine TORO replacement blade to ensure safety and best performance. NEVER USE WILL–FIT REPLACEMENT BLADE.

1. Make sure engine is shut off and remove wire from spark plug.

IMPORTANT: To remove blade from spindle shaft, the rider must be tipped on its rear end. Before the rider is tipped, drain all gasoline from fuel tank and oil from crankcase. Also remove battery so acid does not spill onto the rider. (ALL BAGGING ATTACHMENTS MUST BE REMOVED BEFORE TIPPING RIDER.)

2. Drain gasoline from fuel tank: refer to Draining Gasoline From Fuel Tank, page 19.

3. Drain oil from crankcase: refer to Changing Crankcase Oil, steps 1-6, page 19.

4. Remove battery from chassis: refer to Activating and Charging Battery, page 12.

5. Shift transmission into 1st gear and engage parking brake. Tip rider onto its rear end.

6. Grasp end of blade using a rag or thickly padded glove; then remove blade bolt, washer and blade (Fig. 17).

Note: Since blade bolt is tightened to 45-60 ft-lb (61-81 N·m) at the factory, it may be difficult to remove the bolt. If the bolt cannot be removed, contact an Authorized TORO Service Dealer or a "service station" for assistance.

7. Using a file, sharpen cutting edge at both ends of the blade (Fig. 18).

IMPORTANT: Sharpen top side of the blade and maintain original cutting angle to ensure a sharp cutting edge. The blade will remain balanced if same amount of material is removed from both cutting edges.

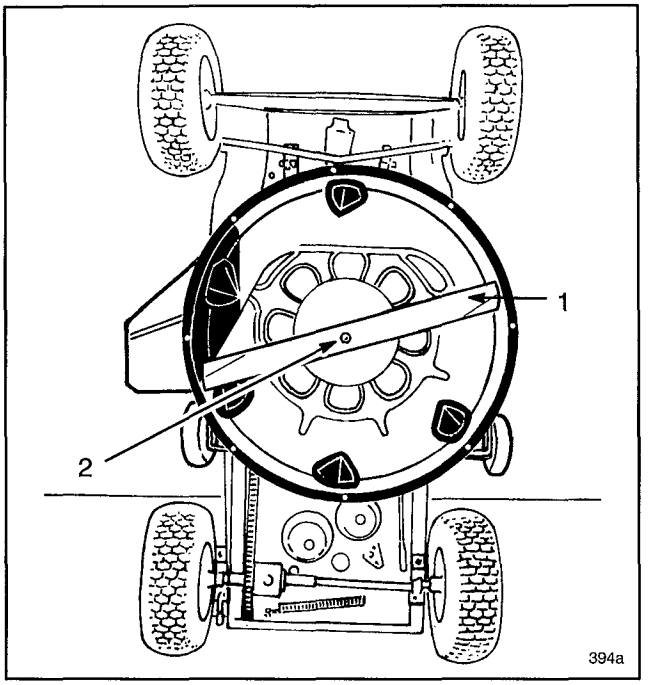

Figure 17

1. Blade *2. Bolt & washer*

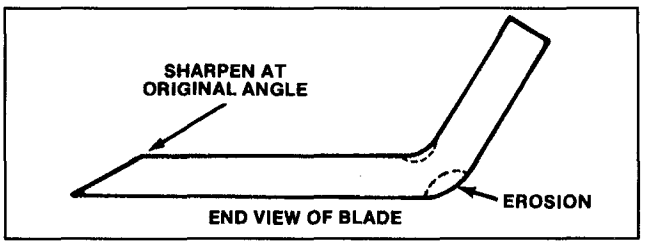

Figure 18

8. Check balance of blade by putting it on a blade balancer. (An inexpensive balancer can be purchased at a hardware store.) A balanced blade will stay in a horizontal position on the balancer. By contrast, a blade that is not balanced will settle to the heavy side. If blade is not balanced, file more material off cutting edge of the blade. Continue to file and check the blade until it is balanced.

9. In sequence, reinstall blade, washer and blade bolt (Fig. 17). Tighten blade bolt to 45-60 ft-lb (61-81 N·m).

IMPORTANT: Make sure cutting edge of blade is away from mower housing.

10. Tip rider back to its normal operating position.

11. Fill crankcase with oil: refer to Fill Crankcase With Oil, page 12.

12. Fill fuel tank with gasoline: refer to Fill Fuel Tank With Gasoline, page 13.

13. Install the battery: refer to Activating and Charging Battery, page 12.

CLEANING UNDERSIDE OF MOWER HOUSING

To ensure a good quality–of–cut, underside of mower housing must be kept clean. Periodically apply a coat of past wax on inside of mower housing. This will retard rust and prevent dirt and grass from sticking on inside of housing.

1. Make sure engine is shut off and wire is off spark plug.

IMPORTANT: To clean underside of mower housing, the rider must be tipped on its rear end. Before the rider is tipped, drain all gasoline from fuel tank and oil from crankcase. Also remove battery so acid does not spill onto the rider.

2. Drain gasoline from fuel tank: refer to Draining Gasoline From Fuel Tank, page 19.

3. Drain oil from crankcase: refer to Changing Crankcase Oil, steps 1–6, page 19.

4. Remove battery from chassis: refer to Activating and Charging Battery, page 10.

5. Shift transmission into 1st gear and engage the parking brake. Tip rider onto its rear end.

6. Remove grass clippings and dirt that are sticking to inside of housing (Fig. 17) by spraying with a garden hose. Scrape out grass and dirt that water does not remove from housing; then spray housing again.

7. Since rider is tipped on end, check condition of blade (Fig. 18).

8. Tip rider back to its normal operating position.

9. Fill crankcase with oil: refer to Fill Crankcase With Oil, page 11.

10. Fill fuel tank with gasoline: refer to Fill Fuel Tank With Gasoline, page 11.

11. Install the battery: refer to Activating and Charging Battery, page 10.

REMOVING/INSTALLING MOWER HOUSING

1. Stop engine and pull wire off spark plug.

2. Shift transmission into 1st gear and engage the parking brake.

3. Move height–of–cut control to lowest position.

IMPORTANT: To remove mower housing from chassis, rider may be tipped on its rear end. Before rider is tipped, gasoline must be drained from fuel tank and oil from the crankcase. Also, remove the battery so acid does not spill onto the rider.

4. Drain gasoline from fuel tank: refer to Draining Gasoline From Fuel Tank, page 11.

5. Drain oil from crankcase: refer to Changing Crankcase Oil, steps 1–6, page 19.

6. Remove battery from chassis: refer to Activating and Charging Battery, page 10.

7. Tip rider onto its rear end.

8. Remove blade drive belt: refer to Replacing Blade Drive Belt, page 23.

9. Remove cotter pin and clevis pin securing deck brake rod to idler bracket (Fig. 19).

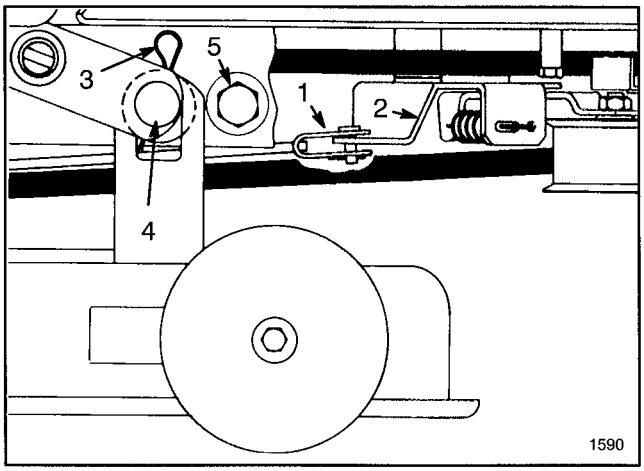

Figure 19

1. *Brake rod*
2. *Idler bracket*
3. *Cotter pin*
4. *Mounting pin*
5. *Deck stops*

10. Remove (2) hairpin cotters and washers retaining mower housing to mounting pins (Fig. 19). Grasp mower housing and move it to the side until housing slides off pins, then forward to allow front mounts to drop.

11. To reinstall mower housing, reverse removal procedure.

12. Reinstall blade drive belt: refer to Replacing Blade Drive Belt, page 23.

13. Tip rider back to its normal operating position.

14. Fill crankcase with oil: refer to Fill Crankcase With Oil, page 11.

15. Fill fuel tank with gasoline: refer to Fill Fuel Tank With Gasoline, page 11.

16. Install the battery: refer to Activating and Charging Battery, page 10.

REPLACING BLADE DRIVE BELT

IMPORTANT: To replace the blade drive belt, the rider may be tipped on its rear end. However, before the rider is tipped, drain all gasoline from fuel tank and oil from crankcase. Also remove battery so acid does not spill onto the rider.

1. Drain gasoline from fuel tank: refer to Draining Gasoline From Fuel Tank, page 19.

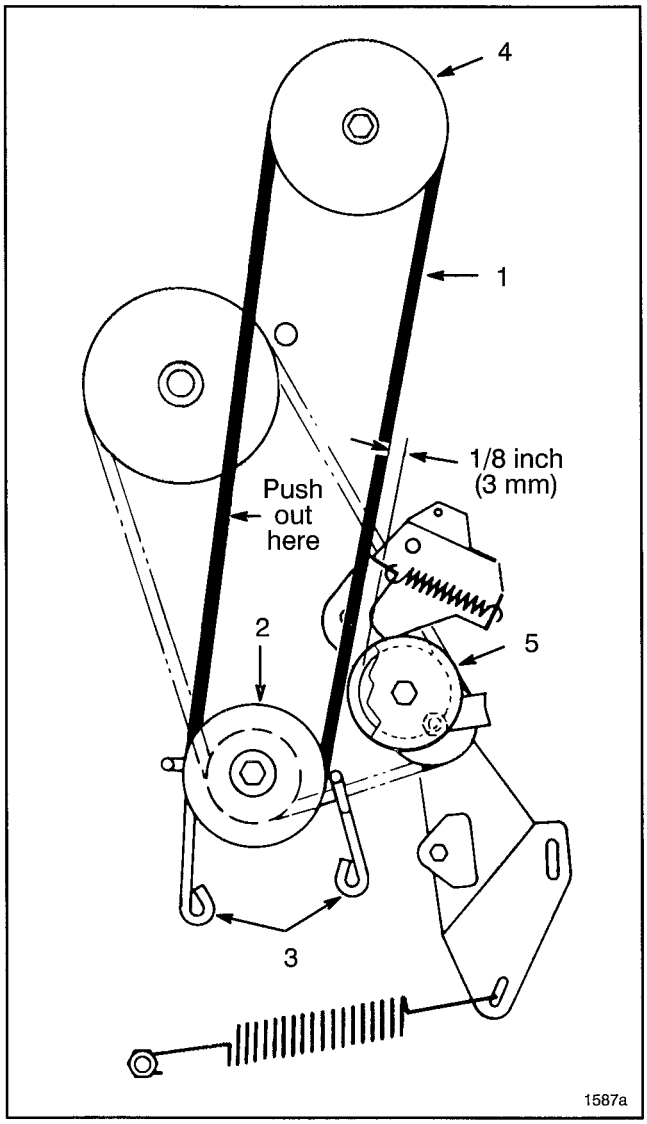

Figure 20

1. *Blade drive belt*
2. *Engine pulley*
3. *Engine pulley belt guides*
4. *Mower housing pulley*
5. *Idler pulley*

2. Drain oil from crankcase: refer to Changing Crankcase Oil, steps 1–6, page 19.

3. Remove battery from chassis: refer to Activating and Charging Battery, page 10.

4. Shift transmission into 1st gear and engage the parking brake. Tip rider onto its rear end.

5. Remove capscrews, retainers and locknuts securing deck stops to each side of mower frame (Fig. 19). Slide mower housing rearward to release belt tension.

6. Move height–of–cut control to lowest position.

7. Loosen capscrews securing (2) engine pulley belt guides and move guides away from pulley. Remove deck drive belt from engine pulley (Fig. 20).

8. Move blade control into ENGAGE detent so brake is away from mower housing pulley.

9. Remove (2) screws securing belt guide to mower housing and remove belt guide. Remove belt from pulley.

10. Make sure blade control is in ENGAGE detent so brake is away from mower housing pulley and install new belt around pulley. Reinstall belt guide to mower housing.

11. Route belt around engine pulley and reinstall belt guides. Make sure belt guides are within 1/8" of pulley or belt but not making contact.

12. Pushing out on belt (removing slack), as shown in fig. 20, check clearance between outside of belt and inside of idler pulley (Fig. 20). Clearance should be approximately 1/8 inch (3mm).

13. If clearance between belt and pulley is correct, proceed to step 16, otherwise proceed to next step for adjustment procedure.

14. Locate deck engagement rod end on left side of transmission (Fig. 21). Remove clevis pin retainer and rotate clevis to lengthen or shorten rod until desired clearance between belt and pulley is attained.

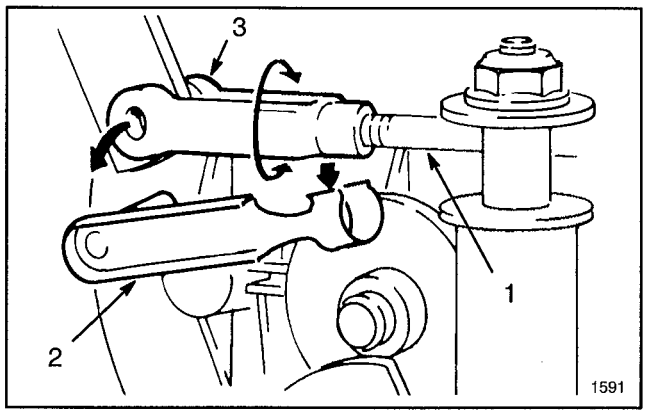

Figure 21

1. Deck engagement rod
2. Clevis pin retainer
3. Clevis

15. Reconnect clevis and recheck adjustment.

16. Tip rider back to its normal position.

17. Fill crankcase with oil: refer to Fill Crankcase With Oil, page 11.

18. Fill fuel tank with gasoline: refer to Fill Fuel Tank With Gasoline, page 11.

19. Install the battery: refer to Activating and Charging Battery, page 10.

REPLACING TRACTION DRIVE BELT

IMPORTANT: To replace the traction drive belt, the rider may be tipped on its rear end. Before the rider is tipped, drain all gasoline from fuel tank and oil from crankcase. Also remove battery so acid does not spill onto the rider.

1. Drain gasoline from fuel tank: refer to Draining Gasoline From Fuel Tank, page 19.

2. Drain oil from crankcase: refer to Changing Crankcase Oil, steps 1–6, page 19.

3. Remove battery from chassis: refer to Activating and Charging Battery, page 10.

4. Shift transmission into 1st gear and engage the parking brake. Tip rider onto its rear end.

5. Remove blade drive belt: refer to Replacing Blade Drive Belt, page 23.

6. Remove the mower housing: refer to Installing/Removing Housing, page 22.

7. Unhook large traction spring from mounting screw (Fig. 22). Use caution when removing spring as it is heavily tensioned.

8. Unhook idler spring from idler bracket (Fig. 22).

9. Remove locknut and washer securing idler bracket to frame and remove bracket (Fig. 22).

10. Loosen the locknut on pulley until belt guide can be removed (Fig. 22). Remove belt from all pulleys.

11. Reverse procedure to reinstall belt.

Note: When reinstalling belt guide to idler pulley, make sure edge of belt guide is parallel to frame as shown in Figure 22.

12. Install mower housing: refer to Removing/Installing Mower Housing, steps 11–14, page 22.

13. Tip rider back to its normal operating position.

14. Fill crankcase with oil: refer to Fill Crankcase with Oil, page 11.

15. Fill fuel tank with gasoline: refer to Fill Fuel Tank With Gasoline, page 11.

16. Install the battery: refer to Activating and Charging Battery, page 10.

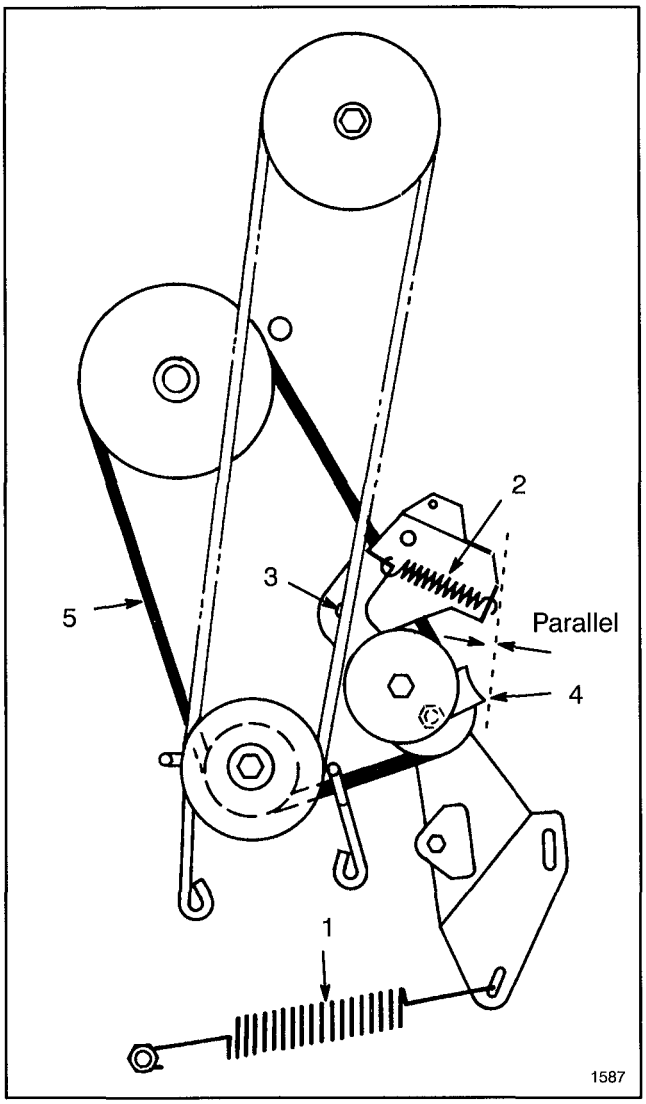

Figure 22

1. *Traction spring*
2. *Idler spring*
3. *Locknut & washer securing idler bracket*
4. *Pulley belt guide*
5. *Traction drive belt*

CHECKING/ADJUSTING DRIVE CHAIN

The drive chain must be adjusted to maintain 1/8 of an inch deflection at mid span between transmission and differential sprockets. Check chain deflection after the first 5 hours of operation and after every 25 hours of operation.

1. Remove two screws securing chain cover to rider chassis and lift off chain cover (Fig. 23).

IMPORTANT: If chain is worn, loose or adjusted incorrectly, chain will make a "popping" sound as it moves over the sprockets, which indicates chain needs adjusting to prevent sprocket damage. If assistance is needed, contact your local authorized Toro Dealer.

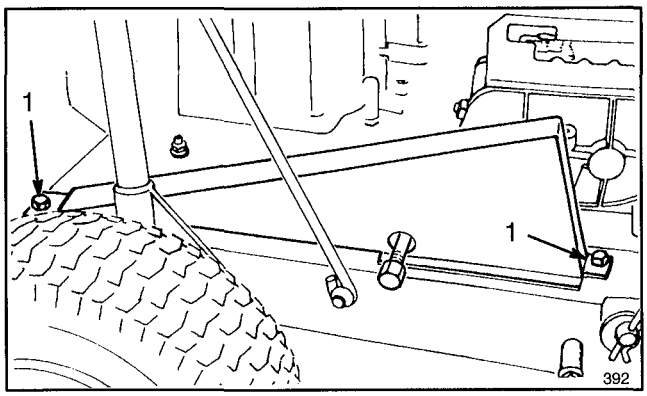

Figure 23

1. Screws

2. Check deflection of drive chain by lifting up and pressing down on chain with moderate pressure at mid span (Fig. 24). There should be 1/8 of an inch (3 mm) total deflection (Fig. 25). If deflection is not as specified, an adjustment is required—steps 3-13.

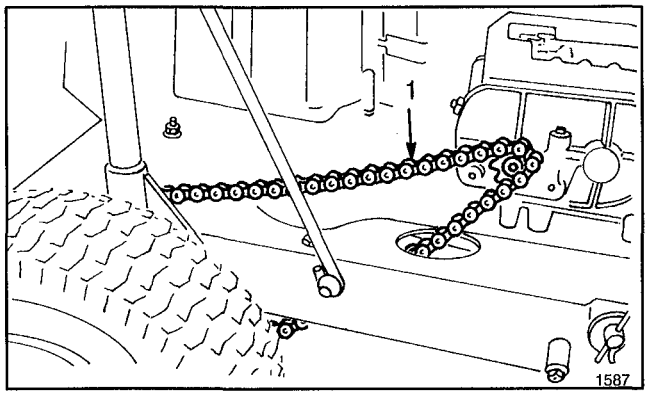

Figure 24

1. Drive chain

IMPORTANT: To adjust drive chain, the rider must be tipped on its rear end. Before the rider is tipped, drain all gasoline from fuel tank and oil from crankcase. Also remove the battery so acid does not spill onto the rider. (ALL BAGGING ATTACHMENTS MUST BE REMOVED BEFORE TIPPING RIDER.)

3. Drain gasoline from fuel tank: refer to Draining Gasoline From Fuel Tank, page 19.

4. Drain oil from crankcase: refer to Changing Crankcase Oil, page 19.

5. Remove battery from chassis: refer to Activating and Charging Battery, page 10 .

6. Shift transmission into 1st gear and engage the parking brake. Tip rider onto its rear end so chassis is on top of 2" x 4" wood blocks. Wheels must be off the floor so axle can be moved.

7. Loosen four flange nuts securing pillow blocks w/differential axle to the rider frame (Fig. 25).

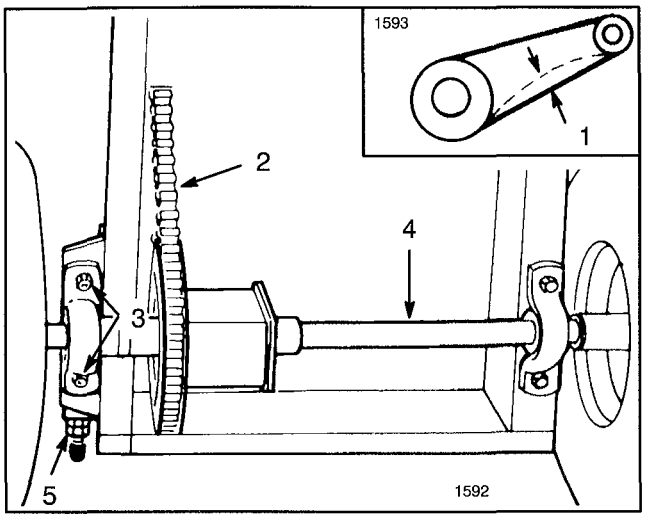

Figure 25

1. *1/8 inch (3mm)*
2. *Drive chain*
3. *Locknuts*
4. *Axle*
5. *Chain tensioner*

8. Loosen rear jamnut on chain tensioner (Fig. 25).

9. Rotate inside nut on chain tensioner until desired chain deflection is attained.

10. Tighten flange nuts securing right pillow block (chain side) to rider frame.

11. Since differential axle must be parallel to rear of chassis, measure distance from center of pillow blocks to rear of chassis (Fig. 25). Difference between the two measurements must not exceed 1/8 inch. If difference exceeds 1/8 inch, differential axle is not parallel with chassis; therefore it must be readjusted.

12. Check the deflection of the drive chain from bottom of rider (refer to step 2).

13. Tip rider back to its normal operating position.

14. Reinstall chain cover.

15. Fill crankcase with oil: refer to Fill Crankcase With Oil, page 12.

16. Fill fuel tank with gasoline: refer to Fill Fuel Tank With Gasoline, page 13.

17. Install the battery: refer to Activating and Charging Battery, page 12.

ADJUSTING BRAKE

Adjust the brake assembly if free travel of brake pedal exceeds one inch or if braking power or parking brake is not sufficient.

1. Stop engine and pull wire off spark plug.

2. Remove battery from chassis: refer to Activating and Charging Battery, page 10.

3. Tighten locknut approximately 1/4 turn clockwise (Fig. 26).

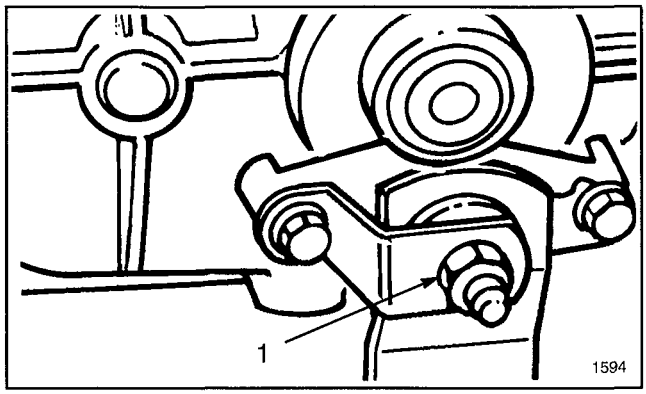

Figure 26

1. *Locknut*

4. Check operation of the brake by pushing rider: no brake drag should be evident. If drag is evident, rotate locknut an additional 1/8 turn counterclockwise or until there is not contact.

5. Reinstall the battery: refer to Activating and Charging Battery, page 10.

CHECKING ELECTRICAL CONNECTIONS

1. Make sure wire on starter motor terminal and battery terminals are secured tightly.

2. Make sure two wires are connected to transmission interlock switch.

3. Push module connectors together to ensure a connection.

4. Also check wires that connect to ignition switch to ensure good contact.

5. Check all interlock switches to be sure wires are not broken and connectors are making good contact.

CHECKING SAFETY INTERLOCK SYSTEM

WARNING

Do not operate the rider if the interlock system is malfunctioning because it is a safety device, designed to protect the operator.

The interlock switches in the electrical system prevent the engine from starting unless the gear shift is in neutral and blade control is disengaged. In addition, the engine will stop — because of a seat switch — if the operator gets off the seat when blade control is engaged or gear shift is in gear. To ensure interlock system is operating correctly, check it before each use of the rider. Have the system checked by an Authorized TORO Service Dealer every two years to ensure safe operation of the rider.

1. Check all electrical connections: refer to Checking Electrical Connections, page 26.

2. Move gear shift into neutral.

3. Move blade control into ENGAGE detent. Sit on the seat and rotate ignition key to START. Engine should not start; if it does, the interlock system is malfunctioning, and it must be repaired by an Authorized TORO Service Dealer. If engine does not start, proceed to step 4.

4. Move blade control into DISENGAGED detent. Sit on the seat, engage the parking brake, depress clutch pedal,shift into gear and hold clutch pedal in depressed position. Rotate ignition key to START. Engine should not start; if it does, the interlock system is malfunctioning and must be repaired by an Authorized TORO Service Dealer. If engine does not start, proceed to step 5.

5. Sit on the seat, move gear shift into neutral, blade control into DISENGAGE detent and ensure parking brake is engaged. Rotate ignition key to START. Engine should start and continue to run. Then engage blade control and carefully raise off the seat: the engine should stop. If engine does not stop running, shut engine off and have interlock system repaired by an Authorized TORO Service Dealer. If engine shuts off when you raise off the seat, the interlock system is functioning correctly and the rider can be operated safely.

PREPARING MOWER FOR STORAGE

1. For long term storage, either drain gasoline from fuel tank or use a fuel additive before storing. To drain gasoline, refer to Draining Gasoline From Fuel Tank, page 19. After fuel is drained, start engine and let it idle until all fuel is consumed and engine stops. Repeat the starting procedure two more times to assure all gas is removed from the engine. If gasoline is not drained, gum–like varnish deposits will form and cause poor engine operation, even starting problems.

Fuel can be left in gas tank only if a fuel additive, such as Toro's Stabilizer/Conditioner, is added to gasoline before storing. Toro's Stabilizer/Conditioner is a petroleum distillate based conditioner/stabilizer. Toro does not recommend stabilizers with an alcohol base, such as ethanol, methanol or isopropyl. Use fuel additive in recommended quantities as specified on container.

Under normal conditions, fuel additives remain effective in fuel for 6–8 months.

2. Remove wire from spark plug and clean area around the plug so foreign matter cannot fall into cylinder when plug is removed. Next, remove plug from cylinder head and pour two tablespoons of engine oil into spark plug hole. Rotate engine by hand to distribute oil on inside of cylinder. Then reinstall spark plug and tighten it to 20 ft-lb. If torque wrench is not used, tighten plug firmly. DO NOT REINSTALL WIRE ON SPARK PLUG.

3. Drain oil from crankcase: refer to Changing Crankcase Oil, page 19. However, do not fill crankcase with oil at this time.

4. Remove battery from chassis: refer to Activating and Charging Battery, page 10. Remove corrosion from battery terminal and wipe any grease and dirt off the battery case. Check level of electrolyte. If level is low, add distilled water to the affected cell. Fill only to the fill ring below the filler cap. Reinstall filler caps.

5. Clean dirt and chaff from outside of cylinder, cylinder head fins, and blower housing. Also, remove grass clippings, dirt, and grime from external parts of rider, engine, shrouding, and top of mower housing.

6. Clean underside of mower housing: refer to Cleaning Underside of Mower Housing, page 22.

7. Check condition of blade: refer to Servicing Cutter Blade, page 21.

8. Check and tighten all cap screws, bolts, screws, nuts, and mating parts. If any part is damaged, repair or replace it.

9. Lubricate wheels and spindles with grease: refer to Grease Front Axle Spindles and Wheels, page 18.

10. Remove dust and dirt from air cleaner element: refer to Servicing Air Cleaner, page 18.

11. Touch up all rusted or chipped paint surfaces. Make sure to sand affected area before painting.

Note: TORO Re-Kote "touch-up" paint is available from any Authorized TORO Service Dealer. The spray paint dries in minutes to a glossy, factory-finish.

12. Fill crankcase with oil: refer to Fill Crankcase With Oil, page 11.

13. Install the battery: refer to Activating and Charging Battery, page 10. Charge battery for 48 hours to assure full charge.

IMPORTANT: Improper storage or failure to recharge may cause battery failure.

14. Store the rider in a clean, dry garage or storage area. Remove key from ignition switch and keep it in a memorable place. Cover the rider to protect it and keep it clean.

WIRING DIAGRAM

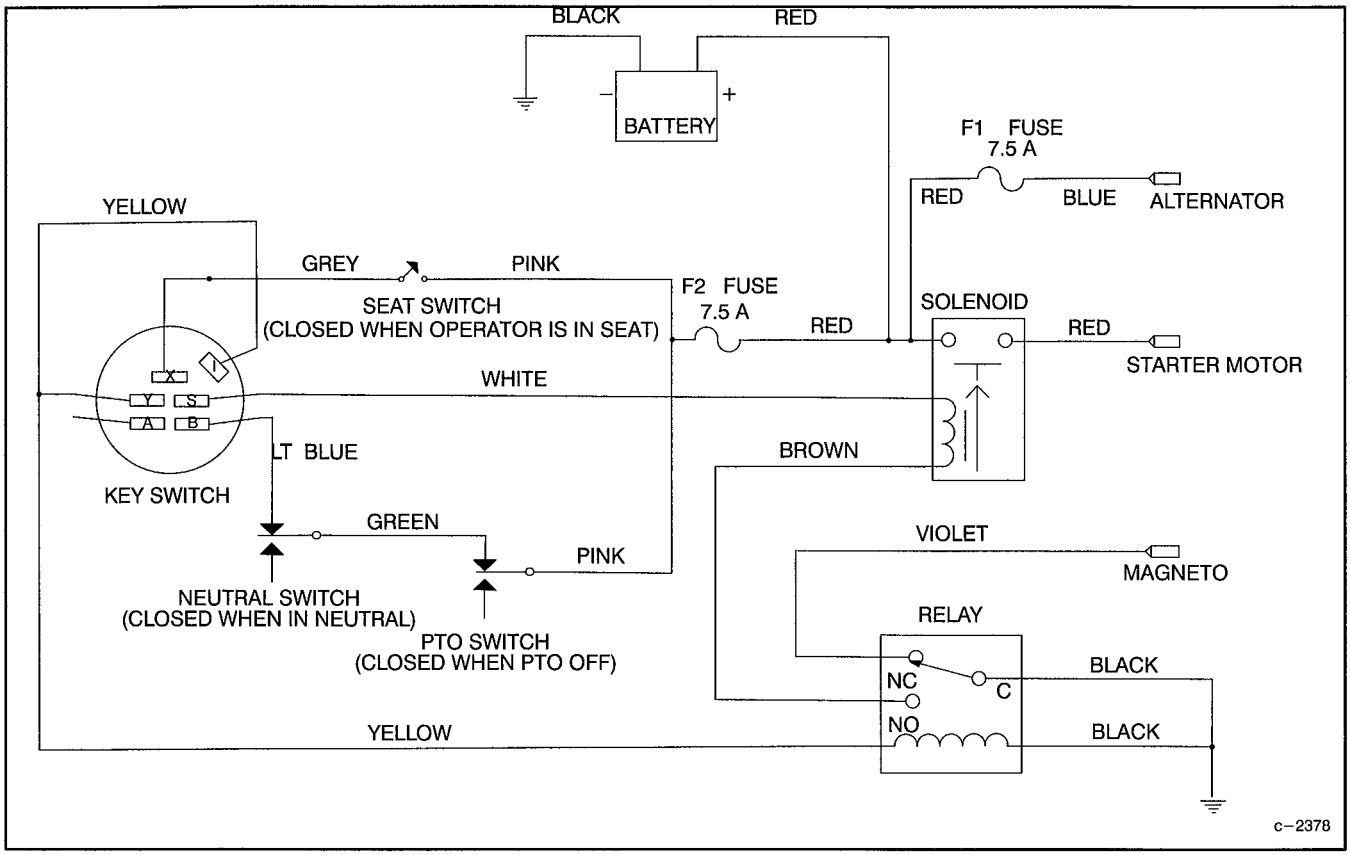

TROUBLE SHOOTING

Problem	Possible Causes	Corrective Action
Engine does not start, starts hard, loses power or fails to keep running	1. Gas tank is empty.	1. Fill fuel tank with gasoline.
	2. Battery is dead.	2. Charge the battery.
	3. Transmission is in gear.	3. Shift transmission into neutral.
	4. Blade control is in ENGAGE detent.	4. Move blade control into DISENGAGE detent.
	5. Spark plug is loose.	5. Tighten plug to 15 ft-lb.
	6. Spark plug wire is loose or disconnected from spark plug.	6. Install wire on spark plug.
	7. Spark plug gap is incorrect.	7. Set gap between electrodes at 0.030 of an inch (0.76) mm).
	8. Spark plug is pitted, fouled, or defective in some other way.	8. Install new, correctly gapped spark plug.
	9. Wrong spark plug is used.	9. Install correct spark plug.
	10. Electrical connections are loose.	10. Check electrical system to ensure good contact.
	11. Carburetor is adjusted incorrectly.	11. Adjust the carburetor.
	12. Air cleaner is dirty.	12. Clean the air cleaner element.
	13. Dirt, water or stale fuel in fuel system.	13. Have rider serviced by Authorized TORO Service Dealer.
	14. Module or switch is inoperative.	14. Have rider serviced by Authorized TORO Service Dealer.
	15. Engine headbolt loose.	15. Tighten headbolt to 200 in–lb.
	16. Operator not in seat.	16. Check seat switch.
Engine does not idle or idles poorly	1. Air cleaner is dirty.	1. Clean air cleaner element.
	2. Cooling fins and air passages under engine blower housing are plugged.	2. Remove obstruction from cooling fins and air passages.
	3. Idle speed is too low. Speed mixture is incorrect.	3. Adjust the carburetor.
	4. Dirt, water or stale fuel is in fuel system.	4. Have rider serviced by an Authorized TORO Service Dealer.
	5. Spark plug is pitted, fouled or damaged in some other way.	5. Install new, correctly gapped spark plug.

TROUBLE SHOOTING

Problem	Possible Causes	Corrective Action
Engine loses power	1. Oil level in crankcase is low.	1. Add oil to crankcase.
	2. Cooling fins and air passages under engine blower housing are plugged.	2. Remove obstruction from cooling fins and air passages.
	3. Engine load is excessive.	3. Shift into lower gear to reduce load.
	4. Air cleaner is dirty.	4. Clean air cleaner element.
	5. Dirt, water, or stale fuel is in fuel system.	5. Have rider serviced by Authorized TORO Service Dealer.
	6. Carburetor is adjusted incorrectly.	6. Adjust the carburetor.
	7. Spark plug is pitted, fouled or defective in some other way.	7. Install new, correctly gapped spark plug.
Engine overheats	1. Cooling fins and air passages under engine blower housing are plugged.	1. Remove obstruction from cooling fins and air passages.
	2. Carburetor is adjusted incorrectly.	2. Adjust the carburetor.
	3. Oil level in crankcase is low.	3. Add oil to crankcase.
	4. Engine load is excessive.	4. Shift into lower gear to reduce load.
Rider vibrates abnormally	1. Engine mounting bolts are loose.	1. Tighten engine mounting bolts.
	2. Differential axle is misaligned.	2. Adjust the drive chain, which includes the differential axle.
	3. Loose PTO pulley, idler pulley or blade pulley.	3. Tighten the appropriate pulley.
	4. Cutter blade is unbalanced or bent.	4. Install new cutter blade.
	5. Blade bolt holding blade is loose.	5. Tighten bolt to 45-60 ft-lb (61-81 N-m).
	6. Drive pulley is damaged.	6. Replace drive pulley.
Blade does not rotate	1. Blade drive belt is worn, loose or broken.	1. Install new blade drive belt.
	2. Blade drive belt is off pulley.	2. Install blade drive belt and check idler pulley and belt guides for correct position.
Rider does not drive	1. Traction belt is worn, loose or broken.	1. Install new traction drive belt.
	2. Traction drive belt is off pulley.	2. Install traction drive belt.
	3. Drive chain is off sprockets.	3. Install and adjust drive chain.
	4. Transmission .	4. Have rider serviced by Authorized Toro Service Dealer.
	5. Traction idler is adjusted incorrectly.	5. Adjust traction drive belt.

MAINTENANCE RECORD

Date	Hours Used	Oil Change	Air Cleaner Service	Lubrication	Sharpen Blade	Winter Storage	Spring Service	Spark Plug Gap

MAINTENANCE RECORD

Date	Hours Used	Oil Change	Air Cleaner Service	Lubrication	Sharpen Blade	Winter Storage	Spring Service	Spark Plug Gap

10° SLOPE CHART

Read all safety instructions on pages 3–6

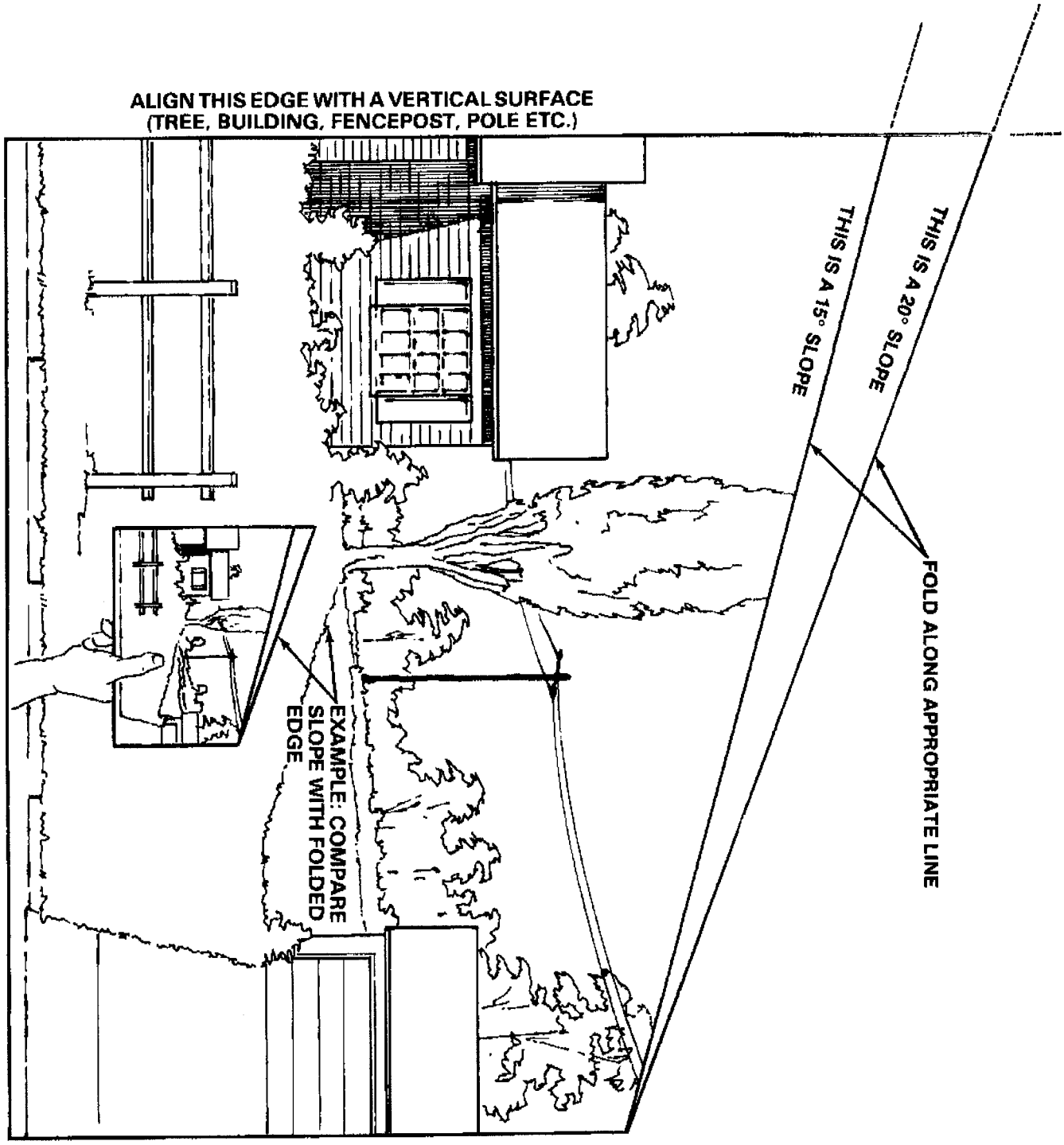


TORO®

TORO Consumer Riding Products

THE TORO TOTAL COVERAGE GUARANTEE

A Full Two-Year Warranty

(Limited Warranty For Commercial Use)

What Is Covered By This Express Warranty?

The Toro Company promises to repair any TORO Product used for normal residential purposes* if defective in materials or workmanship for a period of two years from the date of purchase with the following exceptions:

- Batteries are warranted for one year
- Twin cylinder engines used on 400 and 500 Series tractors are warranted for three years

This warranty covers the cost of parts and labor as well as transportation within a 15 mile radius of the servicing dealer.

What Products Are Covered By This Warranty?

This warranty applies to all consumer riding products and their attachments.

How About Commercial Use?

TORO Consumer Products used for commercial, institutional or rental use are covered by a limited warranty for the following time periods from the date of purchase:

Products	Warranty Period
• 300, 400 and 500 Series Lawn and Garden Tractors	
Chassis	1 year limited warranty
Single Cylinder Engine	2 year limited warranty
Twin Cylinder Engine	3 year limited warranty
• 260 Series Lawn and Garden Tractors, XL Lawn Tractors and Rear Engine Riders	90 day limited warranty

How Do You Get Warranty Service?

Should you feel your TORO Product contains a defect in material or workmanship, contact the dealer who sold you the product or any Authorized TORO Service Dealer or TORO Master Service Dealer. The Yellow Pages of your telephone directory is a good reference source. The dealer will either arrange service at his/her dealership or recommend another Authorized Service Dealer who may be more convenient. You may need proof of purchase (copy of registration card, sales receipt, etc.) for warranty validation.

If for any reason you are dissatisfied with the Service Dealer's analysis of the defect in materials or workmanship or if you need a referral to a TORO Service Dealer, please feel free to contact us at the following address:

Toro Customer Service Department
8111 Lyndale Avenue South
Bloomington, MN 55420-1196
612-888-8801
800-348-2424

What Must You Do To Keep The Warranty In Effect?

You must maintain your TORO Product by following the maintenance procedures described in the operator's manual. Such routine maintenance, whether performed by a dealer or by you, is at your expense.

What Does This Warranty Not Cover? and How Does Your State Law Relate To This Warranty?

There is no other express warranty. This express warranty does not cover:

- Cost of regular maintenance service or parts, such as filters, fuel, lubricants, tune-up parts, blade sharpening, brake and clutch adjustments.
- Any product or part which has been altered or misused or required replacement or repair due to normal wear, accidents, or lack of proper maintenance.
- Repairs necessary due to improper fuel, contaminants in the fuel system, or failure to properly prepare the fuel system prior to any period of non-use over three months.
- Pickup and delivery charges for distances beyond a 15 mile radius from an Authorized TORO Service Dealer.

All repairs covered by this warranty must be performed by an Authorized TORO Service Dealer using Toro approved replacement parts.

Repair by an Authorized TORO Service Dealer is your sole remedy under this warranty.

The Toro Company is not liable for indirect, incidental or consequential damages in connection with the use of the TORO Products covered by this warranty, including any cost or expense of providing substitute equipment or service during reasonable periods of malfunction or non-use pending completion of repairs under this warranty. Some states do not allow exclusions of incidental or consequential damages, so the above exclusion may not apply to you.

This warranty gives you specific legal rights, and you may also have other rights which vary from state to state.

* Normal residential purposes means mowing the lawn on the same lot as your home. Use at more than one location is considered commercial use and the commercial use warranty would apply.

COUNTRIES OTHER THAN THE UNITED STATES OR CANADA

Customers who have purchased TORO Products exported from the United States or Canada should contact their TORO Distributor (Dealer) to obtain guarantee policies for your country, province, or state. If for any reason you are dissatisfied with your Distributor's service or have difficulty obtaining guarantee information, contact the TORO importer. If all other remedies fail, you may contact us at The Toro Company.