FORM NO. 3318–948 Rev. A

TORO®

Wheel Horse®

42” Rear Discharge Mower

for

Classic Garden Tractors

Model No. 78350 – 7900001 & Up

Operator’s Manual

IMPORTANT: Read this manual carefully. It contains information about your safety and the safety of others. Also become familiar with the controls and their proper use before you operate the product.

Introduction

We want you to be completely satisfied with your new product, so feel free to contact your local Authorized Service Dealer for help with service, genuine replacement parts, or other information you may require.

Whenever you contact your Authorized Service Dealer or the factory, always know the model and serial numbers of your product. These numbers will help the Service Dealer or Service Representative provide exact information about your specific product. You will find the model and serial number plate located in a unique place on the product as shown below.

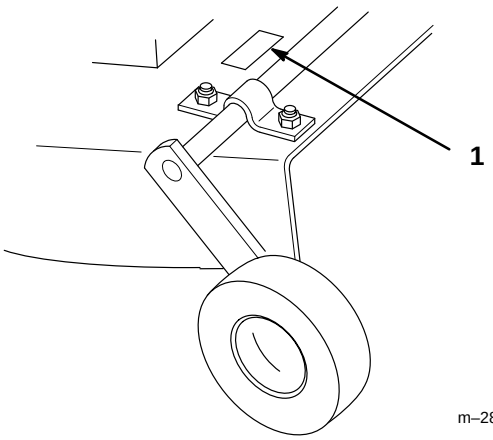

1. Model and Serial Number Plate

For your convenience, write the product model and serial numbers in the space below.

Model No: _____

Serial No. _____

The warning system in this manual identifies potential hazards and has special safety messages that help you and others avoid personal injury, even death. DANGER, WARNING and CAUTION are signal words used to identify the level of hazard. However, regardless of the hazard, be extremely careful.

DANGER signals an extreme hazard that will cause serious injury or death if the recommended precautions are not followed.

WARNING signals a hazard that may cause serious injury or death if the recommended precautions are not followed.

CAUTION signals a hazard that may cause minor or moderate injury if the recommended precautions are not followed.

Two other words are also used to highlight information. “Important” calls attention to special mechanical information and “Note” emphasizes general information worthy of special attention.

The left and right side of the machine is determined by sitting on the seat in the normal operator’s position.

© The TORO Co. – 1996

Printed in USA

Contents

	Page
Safety and Instruction Decals	2
Assembly	3
Loose Parts	3
Attach Height-of-Cut Lever	3
Attach Adjustable Link	3
Installing the Mower	4
Front-to-Rear Blade Slope	6
Transport Height Adjustment	7
Removing the Mower	8
Operation	10
Operating the Power Take Off (PTO)	10
Attachment Lift Lever	10
Attachment Power Lift	11
Adjusting Height-of-Cut	11
Tips for Mowing Grass	12
Maintenance	13
Service Interval Chart	13
Cutting Blade	14
Greasing and Lubrication	16
Blade Drive Belt	16
Power Take Off (PTO) Belt	17
Storage	18
Troubleshooting	19

Safety and Instruction Decals

Safety decals and instructions are easily visible to the operator and are located near any area of potential danger. Replace any decal that is damaged or lost.

ON LEFT AND RIGHT REAR OF MOWER (Part No. 43–8480)



ON MOWER LEFT AND RIGHT SIDES (Part No. 92–7110)

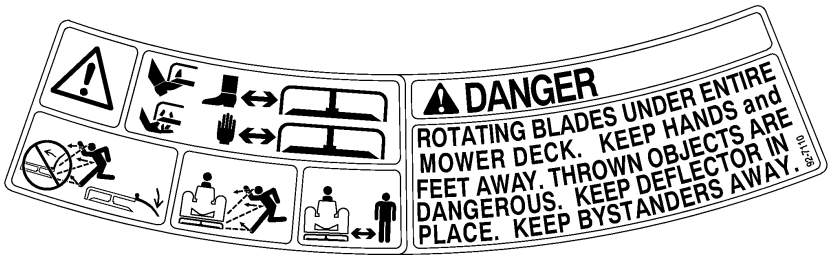

NEXT TO H-O-C LEVER (Part No. 106748)

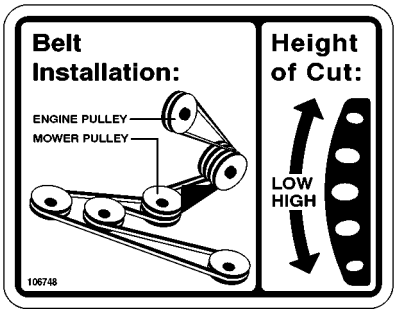

Assembly

Loose Parts

Note: Use the chart below to identify parts used for assembly.

DESCRIPTION	QTY.	USE
Height-of-cut lever	1	Install height-of-cut lever
Spring	1	
V belt	1	Install mower to tractor
Idler assembly	1	
Belt cover	1	
Locknut	1	
Operator's Manual	1	Read before operating

Attach Height-of-Cut Lever

1. Loosen nuts securing quadrant to mower(Fig. 1).

2. Place spring onto long pin of lever. Compress spring and slide lever into square tube. Insert short pin of lever into a quadrant hole hold in position. Tighten quadrant nuts (Fig. 1).

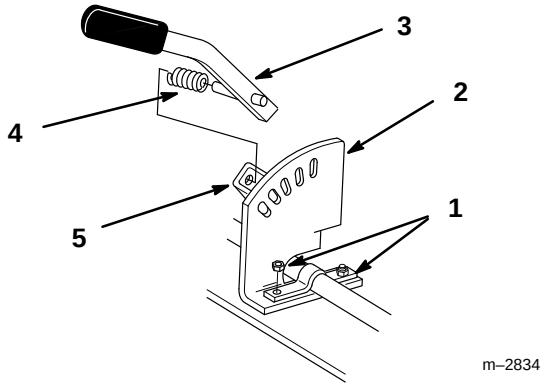

m–2834

Figure 1

1. Nut
2. Quadrant
3. Height-of-Cut lever
4. Spring
5. Square tube

Attach Adjustable Link

1. Place adjustable link trunnion into rear wheel shaft bracket and secure with hairpin cotter (Fig. 2).

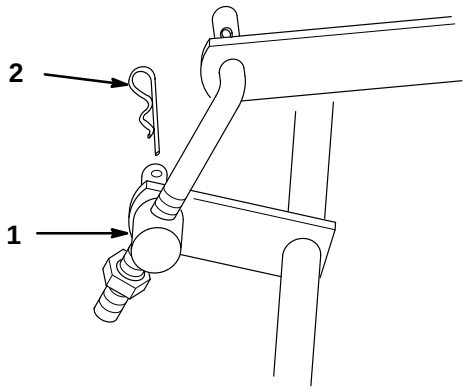

m–2815

Figure 2

1. Adjustable link trunnion
2. Hairpin cotter

Installing the Mower

1. Park the machine on a level surface, disengage the power take off (PTO), set the parking brake, and turn the ignition key to “OFF” to stop the engine. Remove the key.

2. Turn the front wheels fully to the left and raise attachment lift lever all the way to the latched position; refer to tractor Operator’s Manual.

3. Open front and mid-mount hitches by pushing release button and moving lock handles forward (Fig. 3).

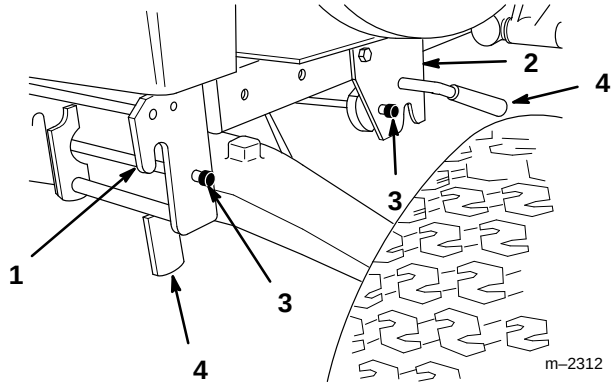

Figure 3

1. Front hitch
2. Mid-mount hitch
3. Release button
4. Lock handle

4. Slide the mower under the chassis from the right side and align attachment lift with slot in center lever bar (Fig. 4).

5. Straighten the front wheels, turn Dial-A-Height knob counterclockwise, all the way, and lower the attachment lift lever to the mounting position; refer to tractor Operator’s Manual.

6. Place attachment lift pin into slot in center lever bar and secure with 3/4” (19 mm) washer and hairpin cotter (Fig. 4).

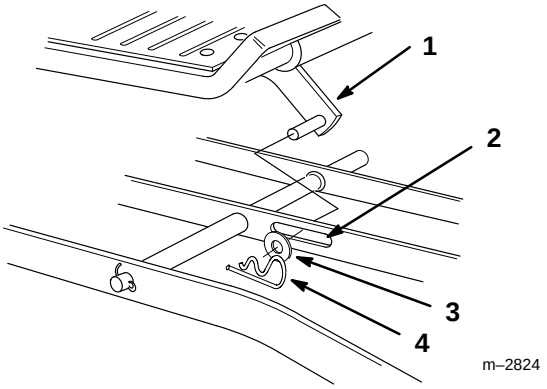

Figure 4

1. Attachment lift
2. Slot-center level bar
3. Washer
4. Hair pin cotter

7. Rotate front mounting shaft so fork faces up and align so spacers are between mid-mount hitch plates (Fig. 5).

8. Lift mower with attachment lift and guide fork to capture hitch rod (Fig. 5). Close mid-mount hitch lock handle.

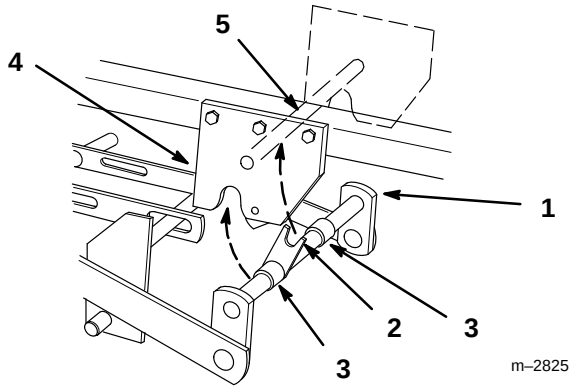

Figure 5

1. Front mounting shaft
2. Fork
3. Spacer
4. Mid-mount hitch plate
5. Hitch rod

9. Remove the two wing nuts and belt cover from the tractor (Fig. 6).

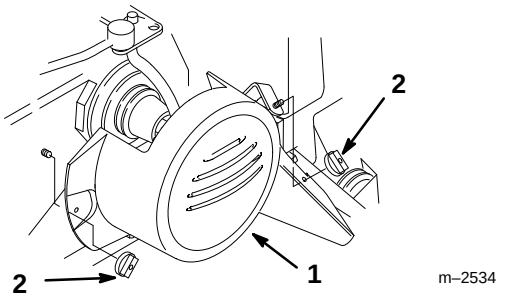

Figure 6

6. Belt cover
7. Wing nut

10. Remove hairpin cotters from trunnion and bottom of yoke (Fig. 7).

11. Unlatch and remove locking clevis pin that secures yoke assembly to clutch shaft. Pivot yoke out and forward to remove from clutch shaft and engagement plate (Fig. 7).

12. Place belt in inside pulley groove (Fig. 7).

13. Assemble yoke and engagement plate and attach locking clevis pin, trunnion and hairpin cotters to secure (Fig. 7).

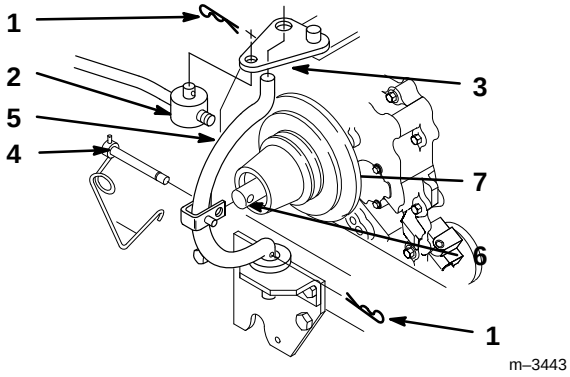

Figure 7

1. Hairpin cotter
2. Trunnion
3. Engagement plate
4. Locking clevis pin
5. Yoke
6. Clutch shaft
7. Inside groove

14. Place pulley assembly into front hitch and lock by moving latch rearward (Fig. 8).

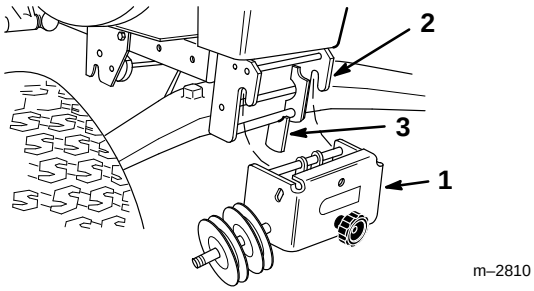

Figure 8

1. Pulley assembly
2. Front hitch
3. Latch

15. Route belt around V and flat pulleys and loop over center mower spindle, top pulley.(Fig. 9).

16. Check that spacer is on shaft and install belt cover with rod in hole. Secure with locknut (Fig. 9).

17. Turn knob counterclockwise to tighten belt (Fig. 9). Tighten until there is 1” (26 mm) belt movement between engine clutch and idler pulley when slight pressure is applied to the belt.

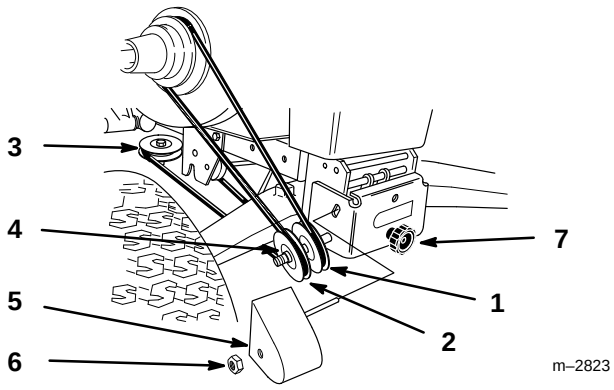

Figure 9

1. V pulley
2. Flat pulley
3. Upper mower pulley
4. Spacer
5. Belt cover
6. Locknut
7. Knob

18. Install belt cover (Fig. 6).

Front-to-Rear Blade Slope

Check the front-to-rear blade slope any time you install the mower. Before checking the slope, set air pressure in the front and rear tires to 12 psi (.85 kPa). If the front blade tip is not 1/8–1/4” (4–7 mm) lower than the rear blade tip, adjust the blade slope using the following instructions:

1. Park the machine on a level surface, disengage the power take off (PTO), set the parking brake, and turn the ignition key to “OFF” to stop the engine. Remove the key.

2. Adjust height-of-cut lever on mower to the middle of the range and lower attachment lift.

3. Carefully rotate blades so they are facing front and rear (Fig. 10).

4. Measure between the tip of the front blade (Fig. 10) and the tip of the rear blade to the flat surface. If the front blade tip is not 1/8–1/4” (4–7 mm) lower than the rear blade tip adjust rear adjustment link.

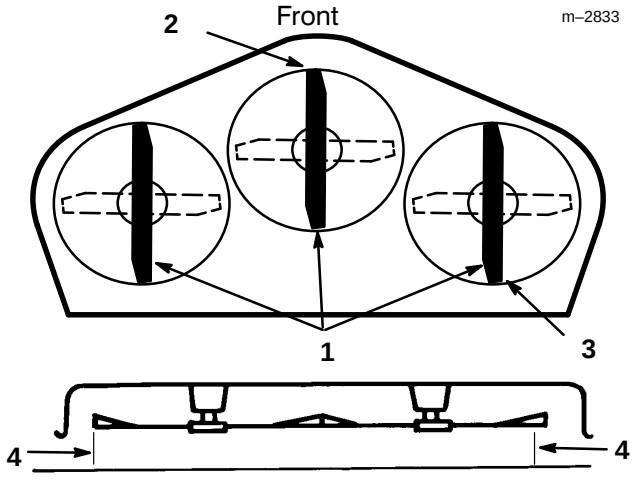

Figure 10

1. Blade front to rear
2. Measure front blade tip
3. Measure rear blade tip
4. Measure here

5. To adjust front-to rear blade slope turn locknut on rear adjustable link (Fig. 11).

Note: To raise the front of the mower, turn locknut clockwise, to lower front turn counterclockwise.

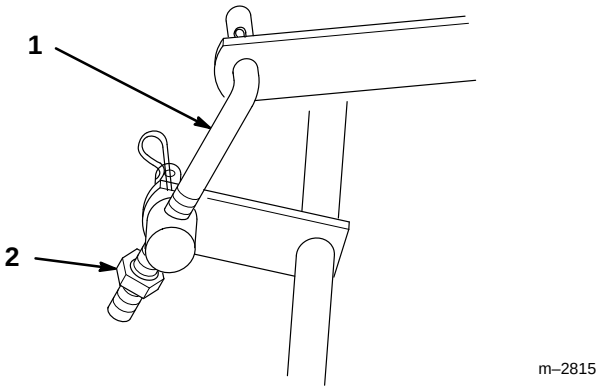

Figure 11

1. Adjustable link
2. Locknut

Transport Height Adjustment

Transport height is adjusted to stabilize the mower in the up, locked position.

1. Raise attachment lift lever all the way to the latched position. Check if bumpers, on rear of mower draft bars contact under footrests.

2. Adjust lift chain by turning trunnion on eyebolt in rear hole of tractor lift (Fig. 12). Turn trunnion clockwise to raise or counterclockwise to lower mower.

3. Transport level stops are normally in the bottom of the slot, however they can be adjusted up for side-to-side level when extra weight from a grass catcher is on one side (Fig. 12).

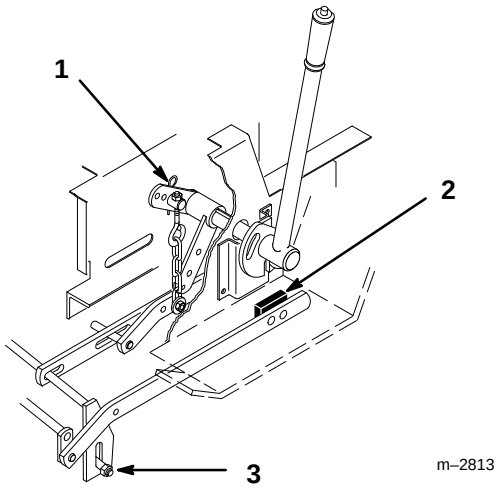

Figure 12

1. Bumper
2. Trunnion
3. Leveling bolts

Removing the Mower

1. Park the machine on a level surface, disengage the power take off (PTO), set the parking brake, and turn the ignition key to “OFF” to stop the engine. Remove the key.

2. Remove the two wing nuts and belt cover from the tractor (Fig. 13).

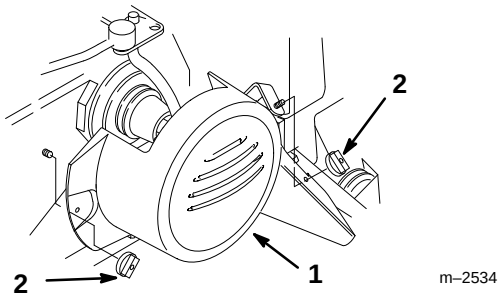

Figure 13

4. Belt cover
5. Wing nut

3. Turn knob on idler assembly clockwise to loosen belt. Remove belt from upper mower pulley (Fig. 14).

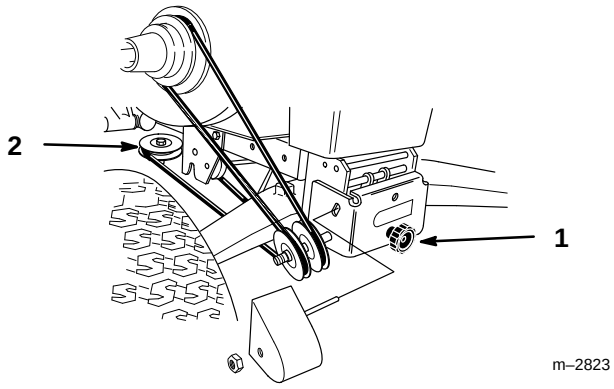

Figure 14

1. Knob
2. Upper mower pulley

4. Remove hairpin cotters from trunnion and bottom of yoke (Fig. 15).

5. Unlatch and remove locking clevis pin that secures yoke assembly to clutch shaft. Pivot yoke out and forward to remove from clutch shaft and engagement plate (Fig. 15).

6. Remove belt from pulley (Fig. 15).

7. Assemble yoke and engagement plate and attach locking clevis pin, trunnion and hairpin cotters to secure (Fig. 15).

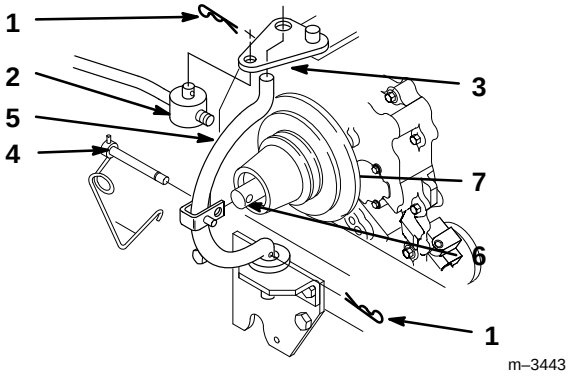

Figure 15

1. Hairpin cotter
2. Trunnion
3. Engagement plate
4. Locking clevis pin
5. Yoke
6. Clutch shaft
7. Inside groove

8. Open front hitch and remove pulley assembly (Fig. 16).

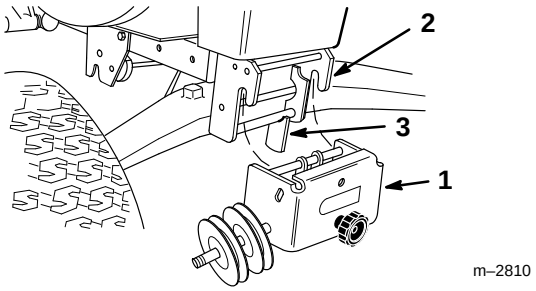

Figure 16

1. Pulley assembly
2. Front hitch
3. Latch

9. Raise attachment lift lever to the mounting position; refer to tractor Operator’s Manual.

10. Open mid-mount hitch lock handle. Lower mower with attachment lift and remove front mounting shaft (Fig. 17).

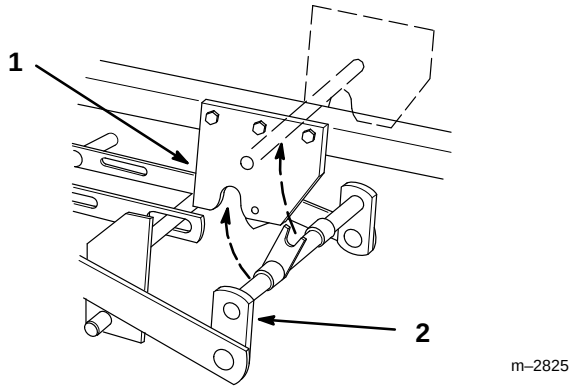

Figure 17

1. Mid-mount hitch
2. Front mounting shaft

11. Remove hairpin cotter and washer from attachment lift pin from slot in center lever bar (Fig. 18).

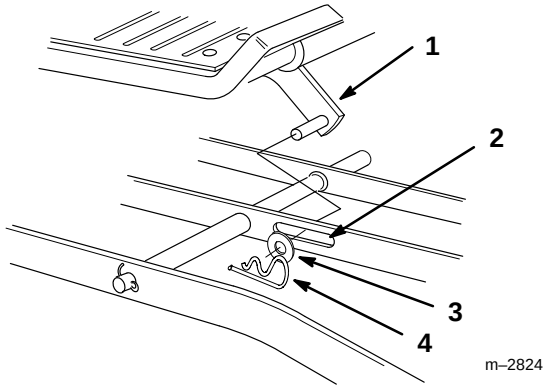

Figure 18

1. Attachment lift
2. Slot-center level bar
3. Washer
4. Hair pin cotter

12. Turn the front wheels fully to the left and raise attachment lift lever all the way to the latched position; refer to tractor Operator's Manual. Slide the mower out from under the chassis to the the right side.

Note: Save all hardware, washers and hairpin cotters for use when installing deck.

Operation

Operating the Power Take Off (PTO)

The power take off (PTO) engages and disengages power to the clutch.

While the ignition key is in “RUN” position and the power take off (PTO) is engaged, the PTO light in the Indicator Module, will be “ON”. When this light is “ON” it is a reminder; the starter will not crank

Engaging the Power Take Off (PTO)

1. Depress the clutch and brake pedals to stop the machine.
2. Push the power take off (PTO) lever forward to engage (Fig. 19).

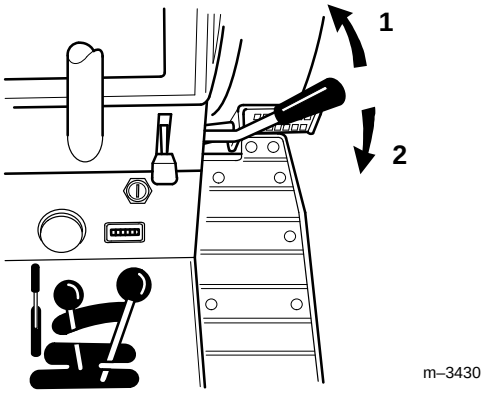

Figure 19

1. Engaged
2. Disengaged

Disengaging the Power Take Off (PTO)

1. Depress the clutch and brake pedals to stop the machine.
2. Pull the power take off (PTO) lever back to disengage (Fig. 19).

Attachment Lift Lever

The attachment lift lever (Fig. 20) is used to raise and lower various attachments.

Raising Attachments

1. Depress the clutch and brake pedals to stop the machine.
2. Pull attachment lift lever rearward until latch locks. In this position the lift will hold the attachment in the up, or raised position.

Lowering Attachments

1. Depress the clutch and brake pedals to stop the machine.
2. Pull attachment lift lever rearward, to release lift pressure, and push the button on top to release the latch. Move lift lever forward to lower attachment.

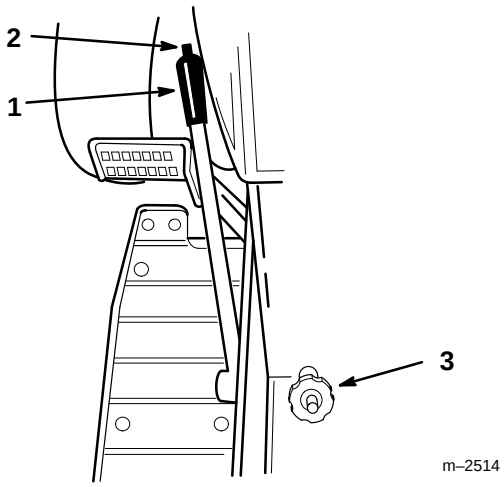

Figure 20

1. Lift lever
2. Button
3. Dial-A-Height

Attachment Power Lift

The attachment power lift (Fig. 21) is used to raise and lower attachments.

Raising Attachments

1. Start the engine, refer to; Starting and Stopping the Engine; in tractor Operator's Manual.

2. Pull the lift lever in the "UP" direction to raise the attachment lift (Fig. 21). This will lift and hold the attachment in the up, or raised position.

Lowering Attachments

1. Start the engine, refer to; Starting and Stopping the Engine; in tractor Operator's Manual.

2. Push the lift lever in the "DOWN" direction to lower the attachment lift (Fig. 21). This will lower the attachment lift.

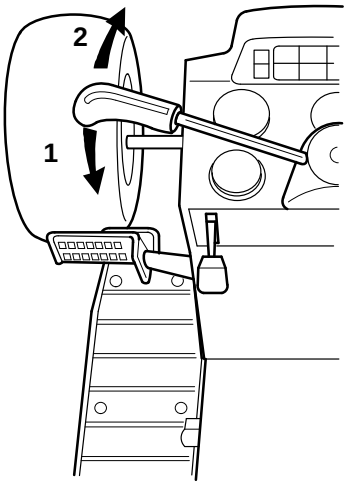

Figure 21

1. Lift lever UP
2. Lift lever DOWN

Adjusting Height-of-Cut

The rear gauge wheels are adjusted in different hole location for 1-1/2–3-1/2" (4–9 cm) height-of-cut.

1. Pull height-of-cut lever out to disengage from quadrant. Adjust height-of-cut to the desired level. Release lever inward to lock into quadrant (Fig. 22).

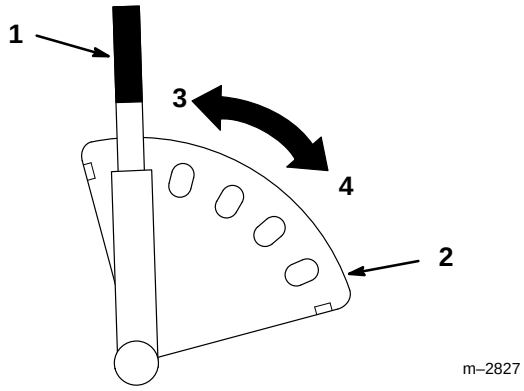

Figure 22

1. Height-of-cut lever
2. Quadrant
3. Low
4. High

Tips for Mowing Grass

Fast Throttle Setting

For best mowing and maximum air circulation, operate the engine at “FAST.” Air is required to thoroughly cut grass clippings, so do not set the height-of-cut so low, as to totally surround the mower by uncut grass. Always try to have one side of the mower free from uncut grass, which allows air to be drawn into the mower.

Cutting a Lawn for the First Time

Cut grass slightly longer than normal to ensure the cutting height of the mower does not scalp any uneven ground. However, the cutting height used in the past is generally the best one to use. When cutting grass longer than six inches tall, you may want to cut the lawn twice to assure an acceptable quality-of-cut.

Cut 1/3 of the Grass Blade

It is best to cut only about 1/3 of the grass blade. Cutting more than that is not recommended, unless grass is sparse or it is late fall when grass grows more slowly.

Mowing Direction

Alternate mowing direction to keep the grass standing straight. This also helps disperse clippings which enhances decomposition and fertilization.

Mow at Correct Intervals

Normally, mow every 4 days. But remember, grass grows at different rates at different times. So to maintain the same cutting height, which is a good practice, mow more often in early spring. As the grass growth rate slows in mid summer, mow less frequently. If you cannot mow for an extended period, first mow at a high cutting height; then mow again 2 days later at a lower height setting.

Ground Speed

To improve cut quality, use slower ground speed.

Avoid Cutting Too Low

If the cutting width of the mower is wider than the mower you previously used, raise the cutting height to ensure uneven turf is not cut too short.

Long Grass

If the grass is ever allowed to grow slightly longer than normal, or if it contains a high degree of moisture, raise the cutting height higher than usual and cut the grass at this setting. Then cut the grass again using the lower, normal setting.

When Stopping

If the machine’s forward motion must be stopped while mowing, a clump of grass clippings may drop onto your lawn. To avoid this:

1. With the blade(s) “ENGAGED,” move onto a previously cut area.
2. To disperse the clippings evenly, raise the mower one or two height-of-cut settings while driving forward with the blade(s) “ENGAGED.”

Keep the Underside of the Mower Clean

Clean clippings and dirt from the underside of the mower after each use. If grass and dirt build up inside the mower, cutting quality will eventually become unsatisfactory.

Blade Maintenance

Maintain a sharp blade throughout the cutting season because a sharp blade cuts cleanly without tearing or shredding the grass blades. Tearing and shredding turns grass brown at the edges, which slows growth and increases the chance of disease. Every 30 days, check the cutter blade(s) for sharpness and file down any nicks.

Maintenance

Service Interval Chart

Service Operation	Each Use	5 Hours	25 Hours	Storage Service	Spring Service	Notes
Cutter Blade—check		X	X	X		
Grease–Mower spindles, wheels			X	X		
Belts—check for wear/cracks				X		
Mower Housing—clean	X	X		X		
Chipped Surfaces—paint				X		

⚠ CAUTION

POTENTIAL HAZARD

- **If you leave the key in the ignition switch, someone could start the engine.**

WHAT CAN HAPPEN

- **Accidental starting of the engine could seriously injure you or other bystanders.**

HOW TO AVOID THE HAZARD

- **Remove the key from the ignition switch and pull the wire off the spark plug before you do any maintenance. Also push the wire aside so it does not accidentally contact the spark plug.**

Cutting Blade

To assure a superior quality of cut, keep the blade(s) sharp. For convenient sharpening and replacement, you may want to have an extra blade(s).

⚠ WARNING

POTENTIAL HAZARD

- **A blade that is worn or damaged could break apart and pieces could be thrown at bystanders or at you as you use the mower.**

WHAT CAN HAPPEN

- **Pieces of blade that may be thrown could seriously injure or kill you or bystanders.**

HOW TO AVOID THE HAZARD

- **Periodically inspect the blade for wear and damage. Immediately install a new blade if it is worn or damaged.**

Inspecting the Blade(s)

1. Remove the mower; refer to Removing the Mower, page 8.

2. Inspect the cutting edges (Fig. 23). If the edges are not sharp or have nicks, remove the blade(s) and sharpen them; refer to Sharpening the Blade(s), page 15.

3. Inspect the blade(s), especially the curved area (Fig. 23). If you notice any damage, wear, or a slot forming in this area (Fig. 23), immediately install a new blade.

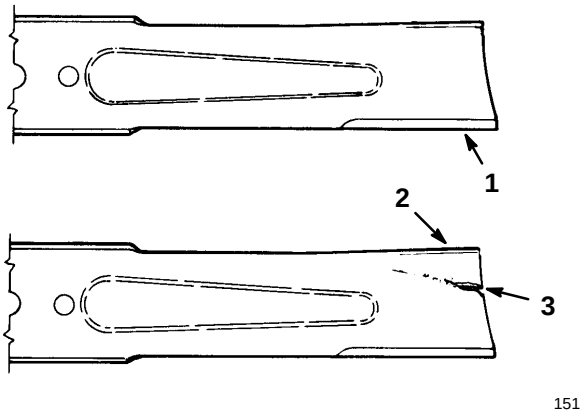

Figure 23

1. Cutting edge
2. Curved area
3. Wear/slot forming

Removing the Blade

1. Remove the mower; refer to Removing the Mower, page 8.

2. Carefully tip the mower over.

3. Remove the nut, flat washer, blade and washer (Fig. 24). A block of wood may be wedged between the blade and the mower to lock the blade when you are removing the bolt.

4. Inspect all parts. If a defect or damage is noticed, install new parts.

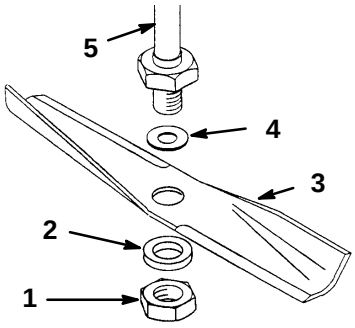

Figure 24

1. Nut
2. Flat washer – thick
3. Blade
4. Washer – thin
5. Spindle

Sharpening the Blade(s)

1. Use a file to sharpen the cutting edge at both ends of the blade (Fig. 25). Maintain the original angle. The blade retains its balance if the same amount of material is removed from both cutting edges.

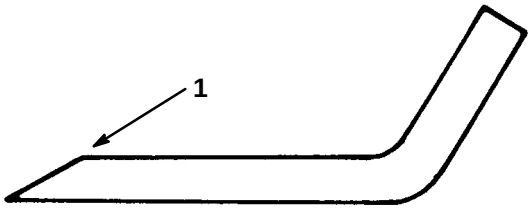

Figure 25

1. Sharpen at original angle

2. Check the balance of the blade by putting it on a blade balancer (Fig. 26). If the blade stays in a horizontal position, the blade is balanced and can be used. If the blade is not balanced, file some metal off the back side of the blade. Repeat this procedure until the blade is balanced.

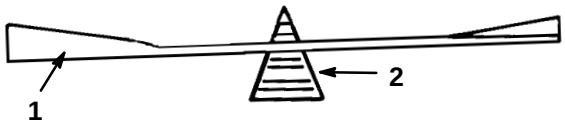

Figure 26

1. Blade
2. Balancer

Installing the Blade(s)

1. Install the washer, blade, flat washer, and the blade nut (Fig. 27).

IMPORTANT: The curved part of the blade must be pointing toward the inside of the mower to assure proper cutting.

2. Tighten the bland nut to 80-100 ft–lb (109-136 Nm).

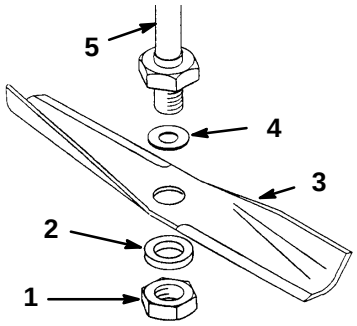

Figure 27

1. Nut
2. Flat washer – thick
3. Blade
4. Washer – thin
5. Spindle

Greasing and Lubrication

Service Interval/Specification

Grease the mower after every 25 operating hours or once a year, whichever occurs first. Grease more frequently when operating conditions are extremely dusty or sandy.

Grease Type: General-purpose grease.

How to Grease

1. Disengage the power take off (PTO), set the parking brake, and turn the ignition key to “OFF” to stop the engine. Remove the key
2. Clean the grease fittings with a rag. Make sure to scrape any paint off the end of the fitting(s).
3. Connect a grease gun to the fitting. Pump grease into the fittings.
4. Wipe up any excess grease.

Where to Add Grease

1. Lubricate the blade spindle and gauge wheel bearings (Fig. 28).

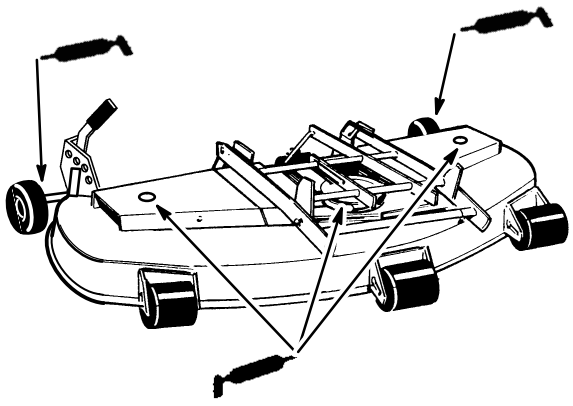

M–2829

Figure 28

Blade Drive Belt

Removing the Blade Drive Belt

1. Remove the mower; refer to Removing the Mower, page 8.
2. Remove pulley cover mounting screws and pulley covers from both blade pulleys.
3. Push on idler to release tension and remove the belt from the pulleys (Fig. 29).

Installing the Blade Drive Belt

1. Install the new belt around the blade pulleys and the idler pulley (Fig. 29).

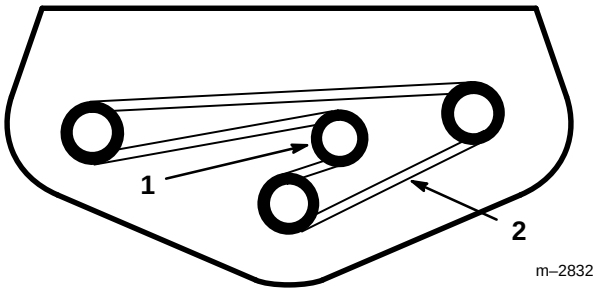

m–2832

Figure 29

1. Idler
2. Belt

2. Install left and right pulley covers with previously removed mounting screws.
3. Install the mower; refer to Installing the Mower, page 4.

Power Take Off (PTO) Belt

1. Remove the two wing nuts and belt cover from the tractor (Fig. 30).

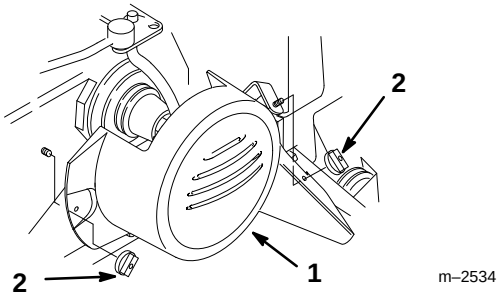

Figure 30

3. Belt cover
4. Wing nut

2. Turn knob on idler assembly clockwise to loosen belt (Fig. 31).

3. Remove locknut and belt cover from idler assembly. Remove belt from upper mower pulley (Fig. 31).

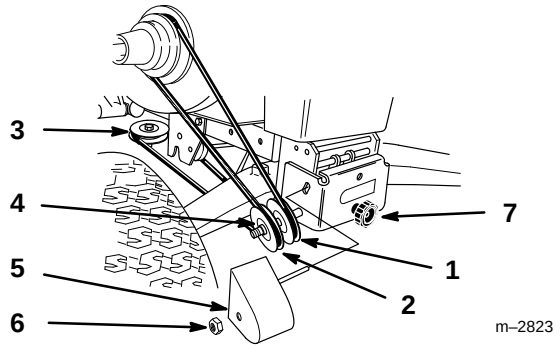

Figure 31

1. V pulley
2. Flat pulley
3. Upper mower pulley
4. Spacer
5. Belt cover
6. Locknut
7. Knob

4. Unlatch and remove locking clevis pin that secures yoke assembly to clutch shaft. Pivot yoke out and forward to remove from clutch shaft and engagement plate (Fig. 32).

5. Replace belt in inside pulley groove (Fig. 32).

6. Assemble yoke and engagement plate and attach locking clevis pin, trunnion and hairpin cotters to secure (Fig. 32).

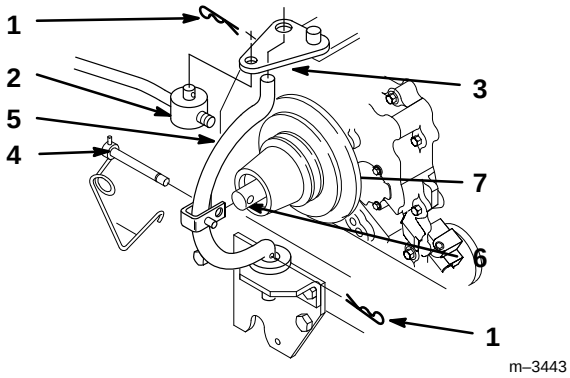

Figure 32

1. Hairpin cotter
2. Trunnion
3. Engagement plate
4. Locking clevis pin
5. Yoke
6. Clutch shaft
7. Inside groove

7. Route belt around V and flat pulleys and loop over center mower spindle, top pulley.(Fig.33).

8. Check that spacer is on shaft and install belt cover with rod in hole. Secure with locknut (Fig.33).

9. Turn knob counterclockwise to tighten belt (Fig. 33). Tighten until there is 1" (26 mm) belt movement between engine clutch and idler pulley when slight pressure is applied to the belt.

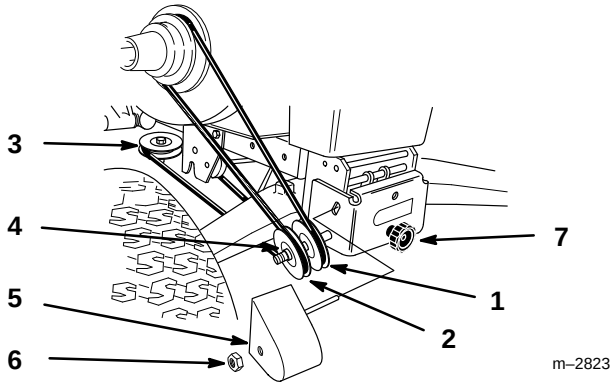

Figure 33

1. V pulley
2. Flat pulley
3. Upper mower pulley
4. Spacer
5. Belt cover
6. Locknut
7. Knob

10. Install belt cover (Fig. 6).

Storage

1. Clean dirt and chaff from the outside of the engine's cylinder head fins and blower housing. Also remove grass clippings, dirt, and grime from the external parts of the entire machine, especially the engine, shrouding, and the top of the mower.

IMPORTANT: You can wash the machine with mild detergent and water. Do not pressure wash the machine. Avoid excessive use of water, especially near the control panel, lights, engine, and the battery.

2. Scrape heavy buildup of grass and dirt from the underside of the mower. Then wash the mower with a garden hose.

3. Check the condition of the blade(s); refer to Cutting Blade, page 14.

4. Check the condition of the blade drive belt.

5. Grease the mower deck; refer to Greasing and Lubrication, page 16.

6. Check and tighten all bolts, nuts, and screws. Repair or replace any part that is damaged or defective.

7. Paint all scratched or bare metal surfaces. Paint is available from your Authorized Service Dealer.

8. Store the machine in a clean, dry garage or storage area. Remove the key from the ignition switch and keep it in a memorable place. Cover the machine to protect it and keep it clean.

Troubleshooting

PROBLEM	POSSIBLE CAUSES	CORRECTIVE ACTION
Abnormal vibration.	1. Cutting blade(s) is bent or unbalanced. 2. Blade mounting bolt is loose. 3. Engine mounting bolts are loose. 4. Loose engine pulley, idler pulley, or blade pulley. 5. Engine pulley is damaged.	1. Install new cutting blade(s). 2. Tighten blade mounting bolt. 3. Tighten engine mounting bolts. 4. Tighten the appropriate pulley. 5. Contact Authorized Service Dealer.
Blade(s) does not rotate.	1. Blade drive belt is worn, loose or broken. 2. Blade drive belt is off pulley. 3. PTO belt is worn, loose or broken.	1. Install new blade drive belt. 2. Install blade drive belt and check idler pulley and belt guides for correct position. 3. Install new PTO belt.
Uneven cutting height.	1. Tire pressure is incorrect. 2. Mower is not level. 3. Underside of mower is dirty.	1. Set tire pressure. 2. Level mower from side-to-side and front-to-rear. 3. Clean the underside of the mower.


TORO®