FORM NO. 3319–290

TORO®

ProLine Hedge Trimmer

Model No. 53040 — 7900001 & Up
Model No. 53041 — 7900001 & Up

PROTOTYPE

Operator’s Manual

⚠ WARNING: ⚠

The engine exhaust from this product contains chemicals known to the State of California to cause cancer, birth defects, or other reproductive harm.

⚠ AVERTISSEMENT: ⚠

Les gaz d’échappement du moteur de ce produit contiennent des produits chimiques reconnus dans l’état de Californie comme cancérigènes, responsables de malformations congénitales, ou comme nocifs à l’égard des fonctions de la reproduction.

⚠ ADVERTENCIA: ⚠

El escape del motor de esta herramienta contiene productos químicos que según la información del Estado de California producen cáncer, defectos congénitos u otros riesgos reproductivos.

PROTOTYPE

Figures

1

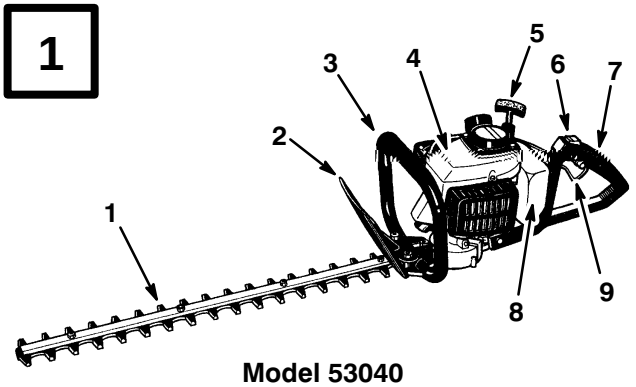

Model 53040

English

1. Blades
2. Front Guard/Model and Serial Number Decal
3. Front Handle
4. Engine
5. Starter Grip
6. Stop Switch
7. Rear Handle
8. Fuel Tank
9. Throttle Trigger

2

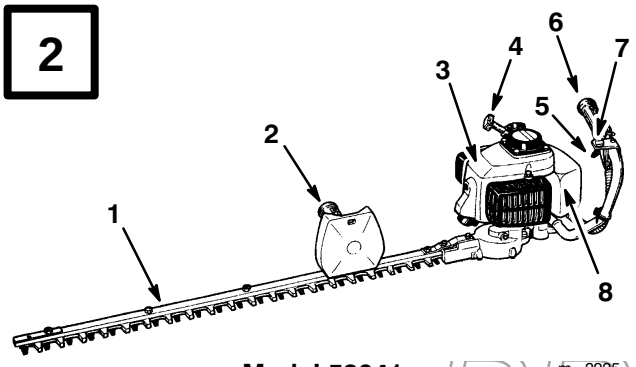

Model 53041

m−2925

English

1. Blade
2. Right Handle/Model and Serial Number Decal
3. Engine
4. Starter Grip
5. Throttle Trigger
6. Left Handle
7. Stop Switch
8. Fuel Tank

3

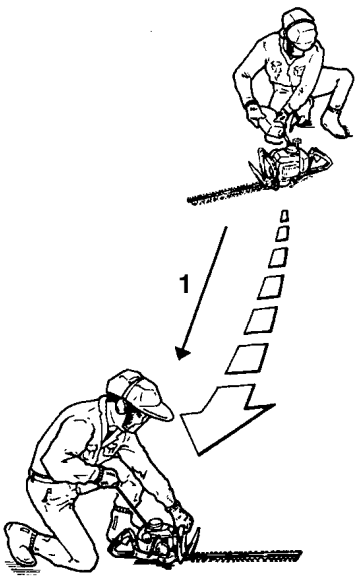

m−2926

English

1. 10 feet (3 m) Minimum

PROTOTYPE

©The Toro Company – 1996
All Rights Reserved

Printed in USA

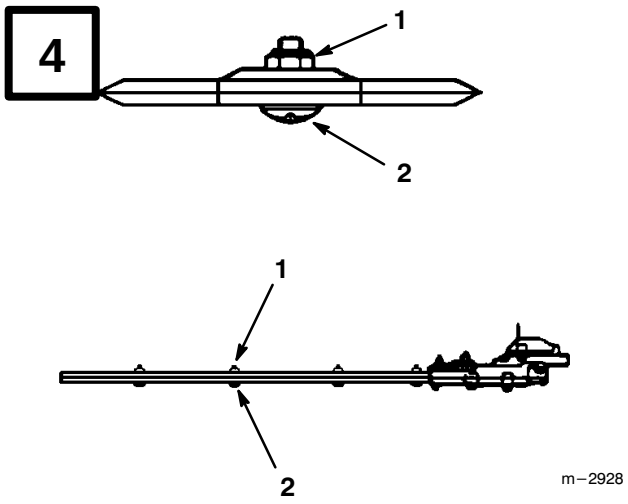

English

1. Nut (typical)
2. Blade Screw (typical)

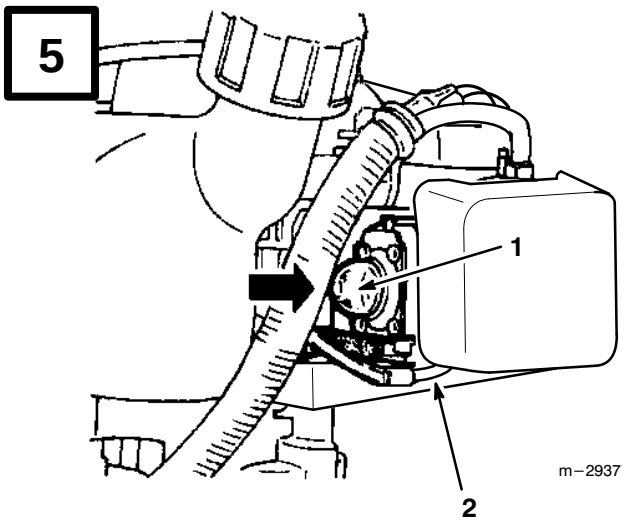

English

1. Primer Bulb
2. Fuel Return Line

PROTOTYPE

6

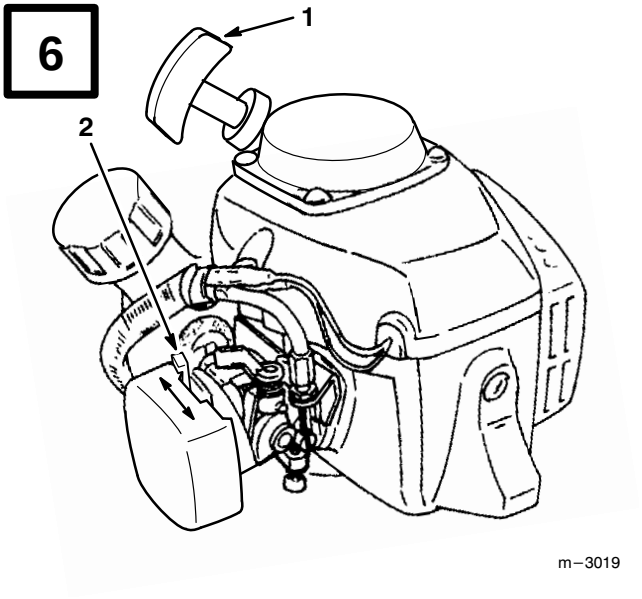

m−3019

English

1. Starter Handle
2. Choke Lever

7

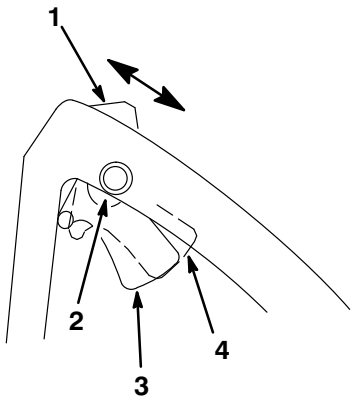

Model 53040

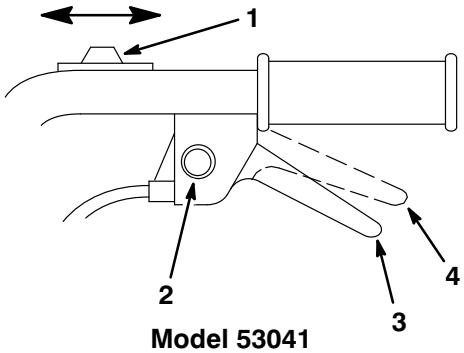

Model 53041

m−3016

English

1. Stop Switch
2. Fast-idle Lock
3. Throttle Trigger (in idle position)
4. Throttle Trigger (in fast-idle start position)

PROTOTYPE

8

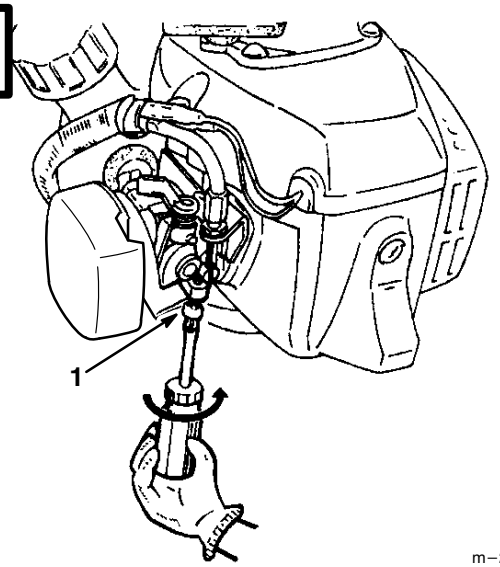

m−2929

English

1. Idle Speed Adjustment Screw

9

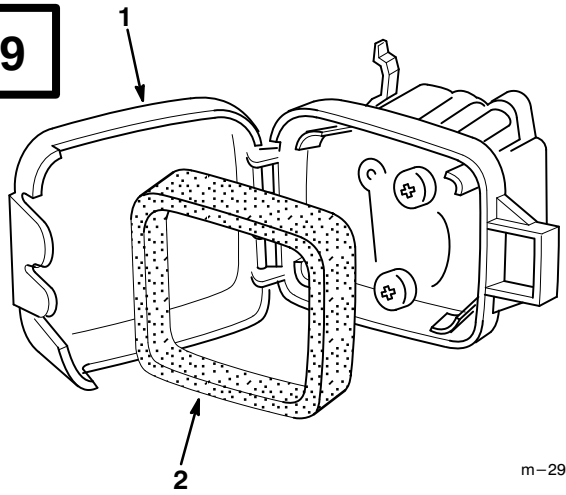

m−2930

English

1. Air Filter Cover
2. Foam Filter

10

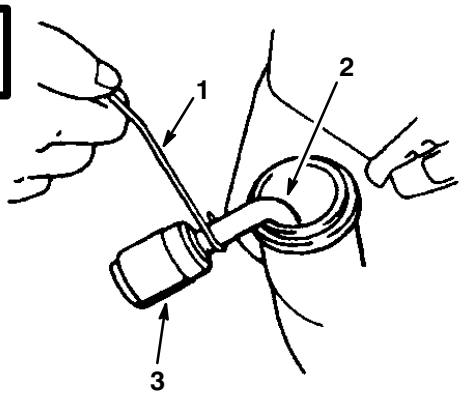

m−2931

English

1. Wire
2. Fuel Pick-up Hose
3. Fuel Filter

PROTOTYPE

11

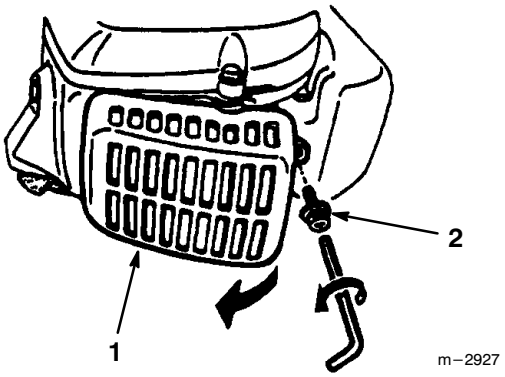

m−2927

English

1. Muffler Cover
2. Socket Head Screw

12

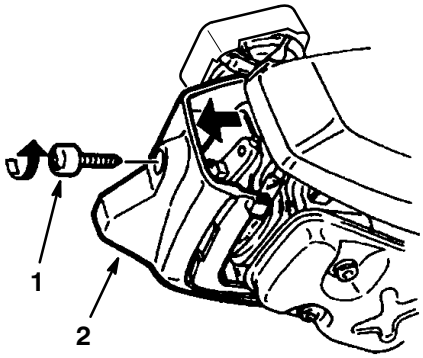

m−2934

English

1. Screw
2. Cylinder Cover

13

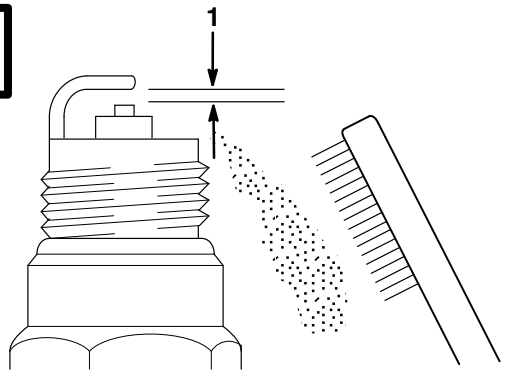

m−2932

English

1. .024”–.028” (0.6–0.7 mm)

PROTOTYPE

14

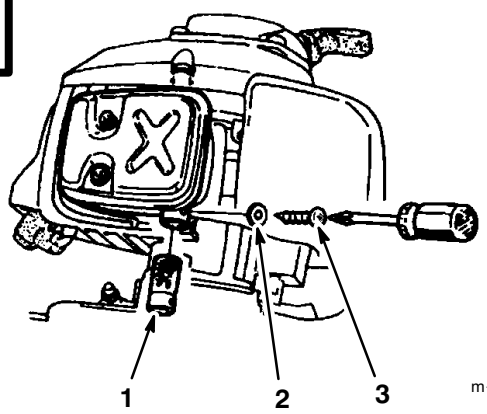

m−2935

English

1. Spark Arrester
2. Washer
3. Screw

15

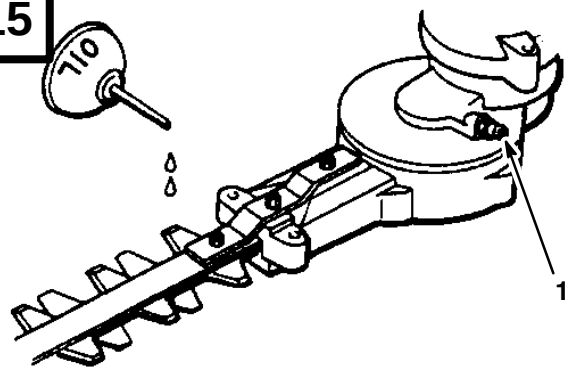

m−2936

English

1. Gearcase Grease Fitting

16

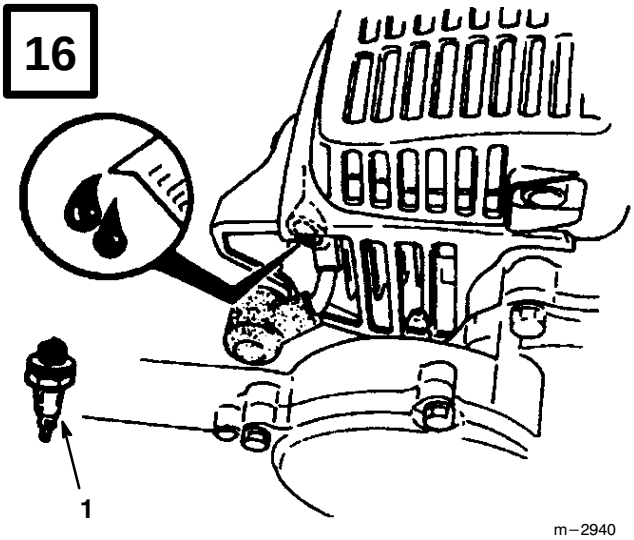

m−2940

English

1. Spark Plug

PROTOTYPE

Contents

	Page
Introduction	1
Safety	2
Operator Safety	2
Power Hedge Trimmer Safety	2
Fuel Safety	3
Power Hedge Trimmer Operating Safety	3
Safety and Instruction Decals	4
Before Operation	5
Oil and Fuel	5
Mixing Gasoline And Oil	6
Adjusting The Cutting Blades	7
Starting And Stopping	8
Idle Speed Adjustment	9
Operation	9
Maintenance	9
Air Filter	9
Fuel Filter	10
Spark Plug	10
Cylinder Cooling Fins	11
Spark Arrester	11
Lubrication : Gearcase And Blades	11
General Cleaning and Tightening	12
Storage	12
Troubleshooting	13
Specifications	13
California Emission Control Warranty Statement	14
Warranty	16

PROTOTYPE

Introduction

Thank you for purchasing a Toro product.

All of us at Toro want you to be completely satisfied with your new product, so feel free to contact your local Authorized Service Dealer for help with service, genuine Toro parts, or other information you may require.

Whenever you contact your Authorized Service Dealer or the factory, always know the model and serial numbers of your product. These numbers will help the Service Dealer or Service Representative provide exact information about your specific product. You will find the model and serial number decal located in a unique place on the product (Figs. 1 and 2).

For your convenience, write the product model and serial numbers in the space below.

Model No. _____

Serial No. _____

Read this manual carefully to learn how to operate and maintain your product correctly. Reading this manual will help you and others avoid personal injury and damage to the product. Although Toro designs, produces and markets safe, state-of-the-art products, you are responsible for using the product properly and safely. You are also responsible for training persons who you allow to use the product about safe operation.

The Toro warning system in this manual identifies potential hazards and has special safety messages that help you and others avoid personal injury, even death. DANGER, WARNING and CAUTION are signal words used to identify the level of hazard. However, regardless of the hazard, be extremely careful.

DANGER signals an extreme hazard that will cause serious injury or death if the recommended precautions are not followed.

WARNING signals a hazard that may cause serious injury or death if the recommended precautions are not followed.

CAUTION signals a hazard that may cause minor or moderate injury if the recommended precautions are not followed.

Two other words are also used to highlight information. “Important” calls attention to special mechanical information and “Note” emphasizes general information worthy of special attention.

Safety

Operator Safety

1. Read and understand this Operator’s Manual before using this product. Be thoroughly familiar with the proper use of this product.

2. Always wear eye protection that complies with ANSI (American National Standards Institute) Z87–1.



3. Always wear hearing protection.



4. Always wear heavy, long pants, boots and gloves. Do not wear loose clothing, jewelry, short pants, sandals, or go barefoot. Secure hair so it is above shoulder length.

5. Never operate this Hedge Trimmer when you are tired, ill, or under the influence of alcohol, drugs or medication.

6. Never start or run the engine inside a closed room or building. Breathing exhaust fumes can cause death.

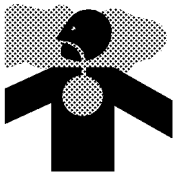

7. Keep handles clean of oil, fuel and dirt.

Power Hedge Trimmer Safety

1. Shut off the engine and wait until the cutting blades have completely stopped moving before checking, performing maintenance on or working on the Hedge Trimmer.

2. Inspect the Hedge Trimmer before each use. Replace damaged parts. Check for fuel leaks. Make sure all fasteners are in place and tightened securely. Follow the maintenance instructions beginning on page 9.

⚠ WARNING

POTENTIAL HAZARD

- **The cutting blades are extremely sharp and dangerous at all times.**

WHAT CAN HAPPEN

- **The cutting blades can cause severe cuts or other serious injuries.**

HOW TO AVOID THE HAZARD

- **Do not touch the sharpened edges of the cutting blades.**
- **Always wear gloves to help protect your hands and fingers from injury**

PROTOTYPE

3. Inspect the Hedge Trimmer cutting blades and guide. Replace any parts that are cracked, chipped or damaged before using the Hedge Trimmer. Refer to Adjusting the Cutting Blades on page 7.

4. Never use replacement parts that are not approved by Toro.

5. Maintain the Hedge Trimmer according to the recommended maintenance intervals and procedures in the Maintenance section on page 9.

6. If running problems or excessive vibration occur, stop immediately and inspect the unit for the cause. If the cause cannot be determined or is beyond your ability to correct, return the Hedge Trimmer to your servicing dealer for repair.

Fuel Safety

1. Gasoline is highly flammable and must be handled and stored carefully. Use a container approved for fuel for storing gasoline and/or fuel/oil mixture.

2. Mix and pour fuel outdoors and where there are no sparks or flames.

3. Do not smoke near fuel or the Hedge Trimmer, or while using the Hedge Trimmer.

4. Do not overfill the fuel tank. Stop filling 1/4–1/2 inch (6mm–13mm) from the top of the tank.

5. Wipe up any spilled fuel before starting the engine.

6. Move the Trimmer at least 10 feet (3 m) away from the fueling location before starting the engine (Fig. 3).

7. Do not remove the Trimmer fuel tank cap while the engine is running, or right after stopping the engine.

8. Allow the engine to cool before refueling.

9. Drain the tank and run the engine dry before storing the unit.

10. Store fuel and the Hedge Trimmer away from open flame, sparks and excessive heat. Make sure fuel vapors cannot reach sparks or open flames from water heaters, furnaces, electric motors, etc.

Power Hedge Trimmer Operating Safety

1. THIS HEDGE TRIMMER CAN CAUSE SERIOUS INJURIES. Read the instructions carefully. Be familiar with all controls and the proper use of the Hedge Trimmer.

2. Never allow children to operate the Trimmer.

3. Keep the area of operation clear of all persons, particularly small children and pets.

4. The Trimmer blades are extremely sharp. Do not put hands or feet near or under any moving parts. Keep your body clear of the blades at all times.

5. Always keep the protective cover over the sharp edges of the blades when the Trimmer is not being used.

6. Use the Trimmer only in daylight or good artificial light.

7. Inspect your work area before you begin. Remove string, rope or similar materials which can become entangled in the Trimmer blades.

8. Avoid hidden hazards. Watch for hidden objects within your working area such as chain link fences, cables, wires, telephone and power lines.

9. Never operate the Trimmer without proper guards or other protective safety devices in place.

10. Keep firm footing and balance. Do not overreach. Do not operate the Trimmer while standing on a ladder or similar temporary support.

11. Use the right tool for the job. Do not use the Trimmer for any job that is not recommended by Toro.

PROTOTYPE

Safety and Instruction Decals

Safety decals and instructions are easily visible to the operator and are located near any area of potential danger. Replace any decal that is damaged or lost.

CAUTION: Extremely sharp blades. Do not touch.

ON BLADE
(Part No. M591450)

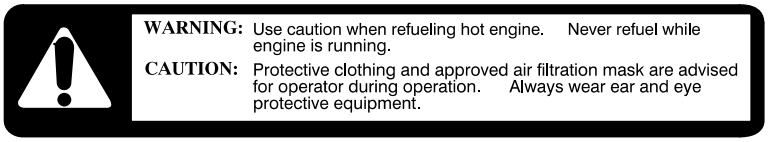

ON HANDLE
(Part No. M591449)

PROTOTYPE

Before Operation

Oil and Fuel

⚠ DANGER

POTENTIAL HAZARD
- **In certain conditions gasoline is extremely flammable and highly explosive.**

WHAT CAN HAPPEN
- **A fire or explosion from gasoline can burn you, others, and cause property damage.**

HOW TO AVOID THE HAZARD
- **Use a funnel and fill the fuel tank outdoors, in an open area, when the engine is cold. Wipe up any gasoline that spills.**
- **Do not fill the fuel tank completely full. Add gasoline to the fuel tank until the level is 1/4" to 1/2" (6mm to 13mm) below the bottom of the filler neck. This empty space in the tank allows gasoline to expand.**
- **Never smoke when handling gasoline, and stay away from an open flame or where gasoline fumes may be ignited by a spark.**
- **Store gasoline in an approved container and keep it out of the reach of children.**
- **Never buy more than a 30-day supply of gasoline.**

PROTOTYPE

1. Do not smoke near fuel.

2. Mix and pour fuel outdoors and where there are no sparks or flames.

3. Always shut off the engine before refueling. Never remove the Hedge Trimmer fuel tank cap while the engine is running or right after just stopping the engine.

⚠ WARNING

POTENTIAL HAZARD
- **Gasoline contains gasses that can build up pressure inside a gas tank.**

WHAT CAN HAPPEN
- **Fuel can be sprayed on you when removing gas cap.**

HOW TO AVOID THE HAZARD
- **Remove fuel cap slowly to avoid injury from fuel spray.**

4. Always open the fuel tank cap slowly to release any possible overpressure inside the tank.

5. Do not overfill the fuel tank. Stop filling 1/4–1/2 inch (6mm–13mm) from the top of the tank.

6. Tighten the tank fuel cap carefully but firmly after refilling.

7. Wipe up any spilled fuel before starting the engine.

8. Move the Hedge Trimmer at least 10 feet (3 m) away from the fueling location and fuel storage container before starting the engine (Fig. 3).

Recommended Oil Type

Only use a two-cycle engine oil formulated for use in high-performance, air-cooled two-cycle engines. Toro brand 2-cycle oil is formulated for use in high-performance, air-cooled two-cycle engines.

IMPORTANT: Do not use National Marine Manufacturer's Association (NMMA) or BIA certified oils. This type of 2–cycle engine oil does not have the proper additives for air-cooled, 2–cycle engines and can cause engine damage.

Do not use automotive motor oil. This type of oil does not have the proper additives for air-cooled, 2–cycle engines and can cause engine damage.

Recommended Fuel Type

Use clean, fresh lead-free gasoline, including *oxygenated* or *reformulated* gasoline, with an octane rating of 85 or higher. To ensure freshness, purchase only the quantity of gasoline that can be used in 30 days. Use of lead-free gasoline results in fewer combustion chamber deposits and longer spark plug life. Use of premium grade fuel is not necessary or recommended.

Use Of Fuel Additives

IMPORTANT: NEVER USE METHANOL, GASOLINE CONTAINING METHANOL, GASOHOL CONTAINING MORE THAN 10% ETHANOL, PREMIUM GASOLINE, OR WHITE GAS BECAUSE ENGINE FUEL SYSTEM DAMAGE COULD RESULT.

DO NOT USE FUEL ADDITIVES OTHER THAN THOSE MANUFACTURED FOR FUEL STABILIZATION DURING STORAGE SUCH AS TORO'S STABILIZER/CONDITIONER OR A SIMILAR PRODUCT. TORO'S STABILIZER/CONDITIONER IS A PETROLEUM DISTILLATE BASED CONDITIONER/STABILIZER. TORO DOES NOT RECOMMEND STABILIZERS WITH AN ALCOHOL BASE SUCH AS ETHANOL, METHANOL OR ISOPROPYL. ADDITIVES SHOULD NOT BE USED TO TRY TO ENHANCE THE POWER OR PERFORMANCE OF MACHINE.

Mixing Gasoline And Oil

IMPORTANT: The engine used on this Hedge Trimmer is of a 2–cycle design. The internal moving parts of the engine, i.e., crankshaft bearings, piston pin bearings and piston to cylinder wall contact surfaces, require oil mixed with the gasoline for lubrication.

Failure to add oil to the gasoline or failure to mix oil with the gasoline at the appropriate ratio will cause major engine damage which will void your warranty.

For your fuel premix, only use a quality oil designed for 2–cycle air cooled engines. Toro 50:1 2–Cycle Oil is formulated to meet the requirements of high-performance, air-cooled two-cycle engines.

Fuel Mixture

The fuel:oil ratio is 50 parts gasoline to 1 part oil or 50:1.



Note: Never use a mixing ratio less than 50:1 regardless of the oil package mixing instructions. Ratios less the 50:1, (for example, 60:1, 80:1, 100:1), reduce the amount of lubrication to the internal moving parts of the engine and can cause damage.

PROTOTYPE

Fuel Mixture Chart

Gasoline	50:1 2-cycle oil
1 gallon	2.6 oz.
2 gallons	5.2 oz.
5 gallons	12.8 oz.

Mixing Instructions

IMPORTANT: Never mix gasoline and oil directly in the Hedge Trimmer fuel tank.

1. Always mix fuel and oil in a clean container approved for gasoline.
2. Mark the container to identify it as fuel mix for the Hedge Trimmer.
3. Use regular unleaded gasoline and fill the container with half the required amount of gasoline.
4. Pour the correct amount of oil into the container then add the remaining amount of gasoline.
5. Close the container tightly and shake it momentarily to evenly mix the oil and the gasoline before filling the fuel tank on the Hedge Trimmer.
6. When refilling the Hedge Trimmer fuel tank, clean around the fuel tank cap to prevent dirt and debris from entering the tank during cap removal.
7. Always shake the premix fuel container momentarily before filling the fuel tank
8. Always use a spout or funnel when fueling to reduce fuel spillage.
9. Fill the tank only to within 1/4–1/2 inch (6mm–13mm) from the top of the tank. Avoid filling to the top of the tank filler neck.

Adjusting The Cutting Blades

⚠ WARNING

POTENTIAL HAZARD
- **The cutting blades are extremely sharp and dangerous at all times.**

WHAT CAN HAPPEN
- **The cutting blades can cause severe cuts or other serious injuries.**

HOW TO AVOID THE HAZARD
- **Do not touch the sharpened edges of the cutting blades.**
- **Always wear gloves to help protect your hands and fingers from injury**

Before operating the Hedge Trimmer, it is necessary to check the adjustment of the cutting blades. Blades that are too loose may vibrate, and will not provide a clean, smooth cut.

IMPORTANT: Blades that are too tight can cause overloading. This may damage the equipment. Do not overtighten the blades.

1. With the blade cover installed, loosen the nuts on the blade screws (Fig. 4).
2. Remove the blade cover, gently turn the blade screws in until they are snug, then back the screws out 1/4 to 1/2 turn (Fig. 4).
3. Hold the blade screws in place and tighten the nuts (Fig. 4).
4. Liberally coat the cutting blades with light oil (Fig. 15).
5. Start the engine and operate the Hedge Trimmer at full speed for at least one minute, then stop the engine.
6. When the blades are motionless, touch the flat surface of the blades with your hand. **Do not touch the cutting edges of the teeth.** The blades should be warm. If the blades are too hot to touch, loosen the screws another 1/8 turn (Fig. 4).

PROTOTYPE

Starting And Stopping

Before Starting The Engine

1. Fill the fuel tank as instructed in the Before Operation section of this manual.
2. Rest the Hedge Trimmer on the ground.
3. Make sure the cutting blades are clear of branches, shrubs, debris, etc.
4. Keep all bystanders, children and animals away from the working area.

Cold Starting Procedure

The carburetors on Toro engines contain a choke system. To start a “cold” engine properly, perform the following procedure:

1. Pump the primer bulb at the bottom of the carburetor until fuel can be seen flowing through the fuel return line to the fuel tank (Fig. 5). (Flowing fuel should be almost clear, not foamy or full of bubbles.)
2. Move the choke lever to the closed ( ) position and move the stop switch to the “ON” position (Figs. 6 and 7).
3. Lock the throttle trigger in the fast-idle start position, then pull the starter handle (Figs. 6 and 7).
4. After the engine starts, move the choke lever to the open ( ) position, then squeeze and release the throttle trigger to allow it to return to the idle position (Figs. 6 and 7).

   If the engine stops running before you move the choke lever to the open ( ) position:

   A. Go ahead and open the choke (Fig. 6).

   B. Make sure the throttle trigger is set to the fast-idle start position (Fig. 7).

   C. Pull the starter handle until the engine starts (Fig. 6).

Hot Restart

To start an engine that is already warmed up (hot restart), or if the ambient temperature exceeds 68°F (20°C):

1. Pump the primer bulb at the bottom of the carburetor until fuel can be seen flowing through the fuel return line to the fuel tank (Fig. 5).
2. Move the choke lever to the open ( ) position and move the stop switch to the “ON” position (Figs. 6 and 7).
3. Leave the throttle trigger in the idle position and pull the starter handle (Figs. 6 and 7).
4. If the engine fails to start after three to four pulls, follow the instructions in the Cold Starting Procedure section above.

   If the engine fails to start after you follow the above procedures, contact an authorized Toro dealer.

PROTOTYPE

To Stop The Engine:

1. Release the throttle trigger (Fig. 7).
2. Slide the stop switch to the “STOP” position (Fig. 7).

Idle Speed Adjustment

⚠ WARNING

POTENTIAL HAZARD
- **Engine must be running to make idle speed carburetor adjustments.**
- **When engine is running, the blades may move.**

WHAT CAN HAPPEN
- **Contact with blades or other moving parts could cause serious personal injury or death.**

HOW TO AVOID THE HAZARD
- **Keep hands, feet and clothing away from blades and other moving parts.**
- **Keep all bystanders and pets away from unit while making carburetor adjustments.**

This Hedge Trimmer is equipped with a non-adjustable fuel mixture carburetor. The engine idle speed is the only adjustment for the operator.

The cutting blades may be moving during idle speed adjustment. Wear the recommended personal protective equipment and observe all safety instructions. Keep hands and body away from the blade area.

When the throttle trigger is released, the engine should return to an idle speed between 2700 and 3300 RPM, or just below the clutch engagement speed. The cutting blades must not move and the engine should not stall (stop running) at engine idle speed.

To adjust the engine idle speed, rotate the idle speed adjustment screw on the carburetor (Fig. 8).

- Turn the idle speed screw in (clockwise) to increase the engine idle speed.

- Turn the screw out (counterclockwise) to decrease the engine idle speed.

If idle speed adjustment is necessary, and if after adjustment the cutting blades move or the engine stalls, stop using the Hedge Trimmer immediately!

Contact your local authorized Toro Dealer for assistance and servicing.

Operation

⚠ CAUTION

- **Read the Safety instructions on page 2 concerning proper use of the Hedge Trimmer.**

The Toro Hedge Trimmer is designed for cutting and trimming foliage and small branches up to 1/4 inch (6mm) in diameter. Although the Toro Hedge Trimmer is capable of cutting larger diameter branches, wear and tear on the machine would be proportionally increased.

⚠ CAUTION

- **Always wear gloves and protective clothing when operating the Hedge Trimmer.**

- If the cutting blades become jammed, stop the engine immediately.

- Make certain all moving parts have stopped and disconnect the spark plug before inspecting the equipment for damage.

- Never use a Hedge Trimmer that has chipped, cracked or broken cutting blades.

PROTOTYPE

Maintenance

Air Filter

Maintenance Interval

- The air filter should be cleaned **daily**, or more often when working in extremely dusty conditions.

- Replace after every 100 hours of operation.

Air Filter Cleaning

1. Unsnap the air filter cover (Fig. 9).
2. Remove the foam filter (Fig. 9).
3. Clean the filter with warm, soapy water. Let the filter completely dry.
4. Apply a light coat of SAE 30 motor oil to the foam filter and squeeze out all excess oil.
5. Reassemble the filter and filter cover (Fig. 9).

Fuel Filter

Maintenance Interval

The fuel filter should be replaced after every 100 hours of operation.

Fuel Filter Replacement

The fuel filter is attached to the end of the fuel pick-up hose inside the fuel tank (Fig. 10).

To replace the fuel filter:

1. Make sure the fuel tank is empty.
2. Remove the fuel cap.
3. Using a wire hook, gently pull the fuel filter out through the fuel filler opening (Fig. 10).
4. Grasp the fuel hose next to the fuel filter fitting and remove the filter, but do not release the hose.
5. While still holding on to the fuel hose, attach the new fuel filter.
6. Drop the new fuel filter back into the fuel tank.
7. Make sure that the fuel filter is not stuck in a corner of the tank, and that the fuel hose is not doubled over (kinked) before refueling.

Spark Plug

Maintenance Interval

- The spark plug should be removed from the engine and checked after each 25 hours of operation.
- Replace the spark plug after every 100 hours of operation.

Spark Plug Maintenance

1. With the engine at ambient (room) temperature, remove the socket head screw holding the muffler cover, then remove the muffler cover (Fig. 11).
2. Loosen the cylinder cover screw and lift off the cylinder cover (Fig. 12).
3. Twist the high tension lead boot on the spark plug back and forth a couple of times to loosen the boot, then pull the boot off of the spark plug.
4. Remove the spark plug.
5. Clean the electrodes with a stiff brush (Fig. 13).
6. Adjust the electrode air gap to .024–.028 in. (0.6–0.7mm) (Fig. 13).
7. Replace the spark plug if it is oil-fouled, damaged, or if the electrodes are worn down.
8. Do not overtighten the spark plug when installing. The tightening torque is 95–148 in. lbs. (10.7–16.6 N•m).
9. Reinstall the cylinder and muffler covers (Figs. 11 and 12).

PROTOTYPE

Cylinder Cooling Fins

Maintenance Interval

The cylinder cooling fins should be cleaned after every 25 hours of operation, or once a week, whichever comes first.

Air must flow freely around and through the cylinder cooling fins to prevent engine overheating. Leaves, grass, dirt and debris buildup on the fins will increase the operating temperature of the engine, which can reduce engine performance and shorten engine life.

Cooling Fin Cleaning

1. With the engine cool (ambient or room temperature), remove the socket head screw holding the muffler cover, then remove the muffler cover (Fig. 11).
2. Loosen the cylinder cover screw and remove the cylinder cover (Fig. 12).
3. Clean all dirt and debris from the cooling fins and from around the cylinder base.
4. Reinstall the cylinder cover and the muffler cover (Figs 11 and 12).

Spark Arrester

⚠ WARNING

POTENTIAL HAZARD

- **Muffler surface becomes hot when Trimmer is in operation and remains hot for some time after the engine is shut off.**

WHAT CAN HAPPEN

- **Contact with hot muffler surfaces could cause a burn.**

HOW TO AVOID THE HAZARD

- **Make sure the muffler is cool before inspecting and cleaning the spark arrester.**

Maintenance Interval

- The spark arrester should be inspected and cleaned after every 25 hours of use.
- Replace the screen if it cannot be thoroughly cleaned, or if it is damaged.

Spark Arrester Maintenance

The spark arrester is installed inside the exhaust outlet of the muffler. One screw located on the side of the exhaust outlet holds the spark arrester in place (Fig. 14). To remove the spark arrester:

1. Remove the socket head screw holding the muffler cover, then remove the muffler cover (Fig. 11).
2. Remove the spark arrester retaining screw and washer, then carefully withdraw the spark arrester using a suitable pair of pliers. Do not crush or distort the spark arrester flange during removal (Fig. 14).
3. Clean the spark arrester with a safety solvent and a stiff brush. If the spark arrester cannot be thoroughly cleaned, it must be replaced.
4. Reinstall the spark arrester and muffler cover (Figs. 11 and 14).

Lubrication: Gearcase And Blades

PROTOTYPE

The gearcase and blades should be lubricated after each 10 hours of use.

The gearcase has a felt wick located at the blade opening. As the Hedge Trimmer is used, the grease within the gearcase becomes very soft. The reciprocating blades constantly draw small amounts of grease between the blade contact surfaces for additional lubrication (Fig. 15).

IMPORTANT: If the gearcase is not lubricated at the recommended intervals, a gearcase failure will occur due to a lack of lubrication. Gearcase failure due to improper maintenance is not covered by warranty.

Note: If the Hedge Trimmer is used under severe conditions such as high ambient temperatures (above 75°F/23°C), or for extended periods of continuous operation, the gearcase and blades must be lubricated every two hours.

- Lubricate the gearcase at the grease fitting with a good quality #2 lithium-base grease (Fig. 15).
- Lubricate the blades using a light (#10 wt.) oil (Fig. 15).

General Cleaning and Tightening

The Toro Hedge Trimmer will provide maximum performance for many, many hours if it is maintained properly.

- Good maintenance includes regular checking of all fasteners for correct tightness, and cleaning of the entire machine.
- Pitch and gum deposits should be removed from the cutting blades daily.
- Check the adjustment of the cutting blade tension regularly (see page 7).

Storage

For long-term storage of the Hedge Trimmer (Fig. 16):

1. Empty the fuel tank into a suitable fuel storage container.

2. Pump the primer bulb on the carburetor until all fuel is discharged through the clear fuel return hose.

3. Run the engine to remove any fuel that may remain in the carburetor.

4. Perform all regular maintenance procedures and any needed repairs.

5. Remove the spark plug and squirt a very small amount of oil into the cylinder.

⚠ CAUTION

POTENTIAL HAZARD
- **Oil may squirt out of the spark plug opening when you pull the starter cord.**

WHAT CAN HAPPEN
- **Oil squirting out of the spark plug opening can cause injuries.**

HOW TO AVOID THE HAZARD
- **Protect your eyes and keep your face away from the spark plug opening.**

6. Pull the starter cord once.

7. Slowly pull the starter cord to bring the piston to the top of the cylinder (TDC).

8. Reinstall the spark plug.

9. Liberally lubricate the blades with a light (#10 wt.) oil.

10. Store the Hedge Trimmer in a dry place away from excessive heat, sparks or open flame.

PROTOTYPE

Troubleshooting

Problem	Cause	Action
Engine Will Not Start	STOP switch set to off position	Move switch to on position
	Empty fuel tank	Fill fuel tank
	Primer bulb wasn't pushed enough	Press primer bulb until fuel flows through fuel return line
	Engine flooded	Use warm engine starting procedure with throttle trigger in fast-idle start position
Engine Will Not Idle	Idle speed set incorrectly	Set idle speed
Engine Lacks Power or Stalls When Cutting	Throttle wire has come loose	Tighten throttle wire
	Dirty air filter	Clean or replace air filter

If further assistance is required, contact your local authorized Toro service dealer.

Specifications

Engine

Model	Commercial
Engine Type	Air-Cooled, 2-Cycle
Displacement	23cc
Ignition Type	Solid State
Spark Plug	NGK BPM6Y
Spark Plug Gap	.024–.028 in (0.6–0.7mm)
Lubrication	Fuel/Oil Mixture
Fuel/Oil Ratio	50:1
Carburetor	Walbro – Choke Type
Fuel Tank Capacity	0.5 liter

Dimensions

53040

Length	40.6 in (103 cm)
Width	8.6 in (22 cm)
Height	9.4 in (24 cm)
Dry Weight	12 lbs (5.4 kg)
Cutting Length	24 in (61 cm)

53041

Length	41.7 in (106 cm)
Width	11 in (28 cm)
Height	9.4 in (24 cm)
Dry Weight	12.8 lbs. (5.8 kg)
Cutting Length	30 in (76.2 cm)

PROTOTYPE

California Emission Control Warranty Statement

Your Warranty Rights And Obligations

The California Air Resources Board and Toro are pleased to explain the emission control system warranty of your 1995 and later lawn and garden equipment engine. In California, new lawn and garden equipment engines must be designed, built and equipped to meet the State's stringent anti–smog standards. Toro must warrant the emission control system on your lawn and garden equipment engine for the periods of time listed below provided there has been no abuse, neglect or improper maintenance of your lawn and garden equipment engine.

Your emission control system may include parts such as the carburetor or fuel injection system, the ignition system, and catalytic converter. Also included may be hoses, belts, connectors and other emission–related assemblies.

Where a warrantable condition exists, Toro will repair your lawn and garden equipment engine at no cost to you including diagnosis, parts and labor.

The 1995 and later utility and lawn and garden equipment engines are warranted for two years. If any emission–related part on your engine is defective, the part will be repaired or replaced by Toro.

Owner's Warranty Responsibilities:

- As the lawn and garden equipment engine owner, **you are responsible for the performance of the required maintenance listed in your Operator's manual**. Toro recommends that you retain all receipts covering maintenance on your lawn and garden equipment engine, but Toro cannot deny warranty solely for the lack of receipts or for your failure to ensure the performance of all scheduled maintenance.
- As the lawn and garden equipment engine owner, you should however be aware that Toro may deny you warranty coverage if your lawn and garden equipment engine or a part has failed due to abuse, neglect, improper maintenance or unapproved modifications.
- You are responsible for presenting your lawn and garden equipment engine to a Toro Authorized Service Dealer as soon as a problem exists. The warranty repairs should be completed in a reasonable amount of time, not to exceed **30 days**.

PROTOTYPE

If you have any questions regarding your warranty rights and responsibilities, you should call 1–800–237–2654.

Manufacturer’s Warranty Coverage:

- The warranty period begins on the date the engine or equipment is delivered to the retail purchaser.
- The manufacturer warrants to the initial owner and each subsequent purchaser, that the engine is free from defects in material and workmanship which cause the failure of a warranted part for a period of two years.
- Repair of replacement of warranted part will be performed at no charge to the owner at an Authorized Toro Service Dealer. For the nearest location, please contact Toro at: 1–800–237–2654.
- Any warranted part which is not scheduled for replacement, as required maintenance which is scheduled only for regular inspection to the effect of “Repair or replace as necessary” is warranted for the warranty period. Any warranted part which is scheduled for replacement as required maintenance will be warranted for the period of time up to the first scheduled replacement point for that part.
- The owner will not be charged for diagnostic labor which leads to the determination that a warranted part is defective, if the diagnostic work is performed at an Authorized Toro Service Dealer.
- The manufacturer is liable for damages to other engine components caused by the failure of a warranted part still under warranty.
- Failures caused by abuse, neglect or improper maintenance are not covered under warranty.
- The use of add–on or modified parts can be grounds for disallowing a warranty claim. The manufacturer is not liable to cover failures or warranted parts caused by the use of add–on or modified parts.
- In order to file a claim, go to your nearest Authorized Toro Service Dealer. Warranty services or repairs will be provided at all Authorized Toro Service Dealers.
- Any manufacturer approved replacement part may be used in the performance of any warranty maintenance or repair of emission related parts and will be provided without charge to the owner. Any replacement part that is equivalent in performance or durability may be used in non–warranty maintenance or repair and will not reduce the warranty obligations of the manufacturer.
- The following components are included in the emission related warranty of the engine, air filter, carburetor, primer, fuel lines, fuel pick up/fuel filter, ignition module, spark plug and muffler.

PROTOTYPE

TORO LCG

THE TORO TOTAL COVERAGE GUARANTEE

A One-Year Limited Warranty
(A Two-Year Full Warranty for Residential Use)

What Is Covered By This Express Warranty?

The Toro Company promises to repair any TORO Product used for commercial, institutional, or rental purposes if defective in materials or workmanship for a period of one year from the date of purchase. The cost of parts and labor are included, but the customer pays the transportation cost. Transportation within a 15-mile radius of a TORO ProLine Service Dealer is covered under this warranty for Riding Products, Mid-size Mowers and Turf Maintenance Equipment.

What Products Are Covered By This Warranty?

The following products and their attachments are covered by this warranty:

- Z-Master Zero Radius Tractors
- ProLine Mid-size Mowers
- Groundsmaster Riding Mowers
- ProLine Hand-held Gas Products
- Backpack Blowers
- Commercial WPM
- Turf Maintenance Equipment
- Debris Management Equipment

How About Residential Use?

TORO Products used for residential use are covered by a full two-year warranty.

How Do You Get Warranty Service?

Should you feel your TORO Product contains a defect in materials or workmanship, contact the dealer who sold you the product or any TORO ProLine Service Dealer. The Yellow Pages of your telephone directory is a good reference source; look under TORO Commercial Service Dealers. The Service Dealer will either arrange service at his/her dealership or recommend another authorized Service Dealer who may be more convenient. You may need proof of purchase (copy of registration card, sales receipt, etc.) for warranty validation.

If for any reason you are dissatisfied with a Service Dealer's analysis of the defect in materials or workmanship or if you need a referral to a TORO ProLine Service Dealer, please feel free to contact us at the following address:

Toro Customer Service Department
8111 Lyndale Avenue South
Bloomington, MN 55420–1196
612–888–8801 or 800–348–2424

What Must You Do To Keep The Warranty In Effect?

You must maintain your TORO Product by following the maintenance procedures described in the operator's manual. Such routine maintenance, whether performed by a dealer or by you, is at your expense.

What Does This Warranty Not Cover? and How Does Your State Law Relate To This Warranty?

There is no other express warranty except for special emission system coverage on some products and as described above. This express warranty does not cover:

- Cost of regular maintenance service or parts, such as filters, fuel, lubricants, tune-up parts, blade sharpening, brake and clutch adjustments.
- Any product or part which has been altered or misused or required replacement or repair due to normal wear, accidents, or lack of proper maintenance.
- Repairs necessary due to improper fuel, contaminants in the fuel system, or failure to properly prepare the fuel system prior to any period of non-use over three months.
- Pickup and delivery charges for distances beyond a 15-mile radius from a TORO ProLine Service Dealer.

All repairs covered by this warranty must be performed by a TORO Service Dealer using Toro approved replacement parts.

The Toro Company is not liable for indirect or consequential damages in connection with the use of the TORO Products covered by this warranty, including any cost or expense of providing substitute equipment or service during reasonable periods of malfunction or non-use pending completion of repairs under this warranty. Some states do not allow exclusions of incidental or consequential damages, so the above exclusion may not apply to you.

This warranty gives you specific legal rights, and you may also have other rights which vary from state to state.

PROTOTYPE

COUNTRIES OTHER THAN THE UNITED STATES OR CANADA

Customers who have purchased TORO products exported from the United States or Canada should contact their TORO Distributor (Dealer) to obtain guarantee policies for your country, province, or state. If for any reason you are dissatisfied with your Distributor's service or have difficulty obtaining guarantee information, contact the TORO importer. If all other remedies fail, you may contact us at The Toro Company.

Rev 6/18/97