FORM NO. 3319–493 Rev. A

TORO®

MODEL NO. 03506 – 70001 thru 80001 & UP
MODEL NO. 03509 – 70001 thru 80001 & UP

OPERATOR'S MANUAL

5 BLADE & 8 BLADE CUTTING UNITS

For Reelmaster® 5100D/5300D Traction Units

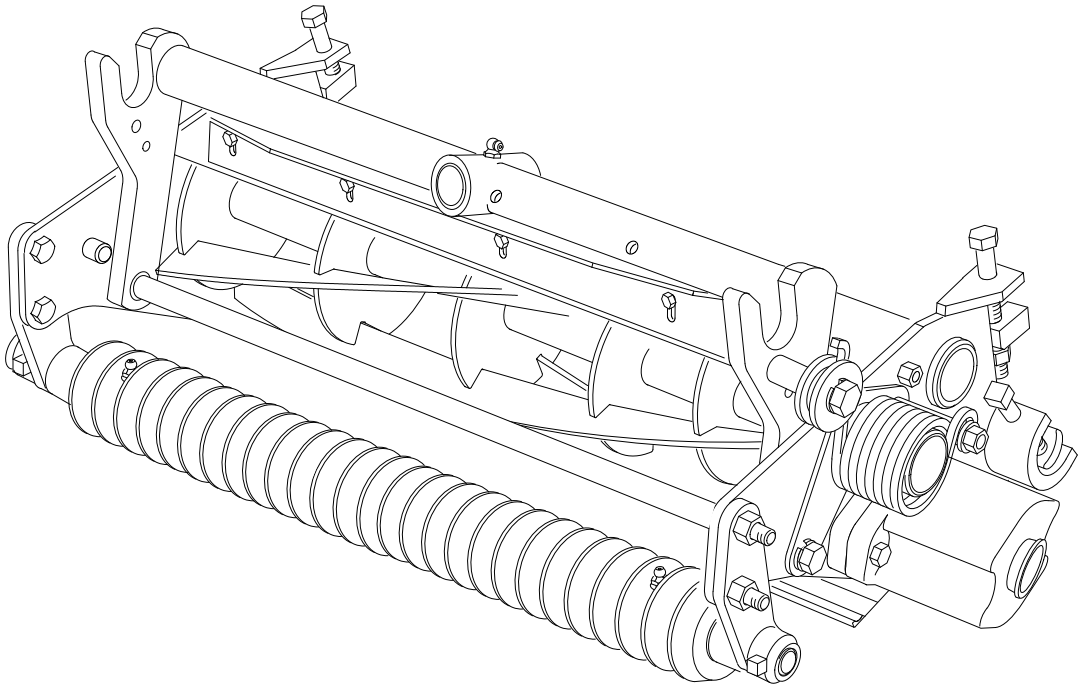

© The TORO COMPANY – 1997

TABLE OF CONTENTS

	Page No.
SPECIFICATIONS	2
KNOW YOUR CUTTING UNIT	2
ADJUSTING CUTTING UNIT	3
Adjusting Bedknife to Reel	2
Adjusting Shield Height	3
Adjusting Top Bar	3
Leveling Front Roller to Reel	4
Adjusting Height−of−Cut	4
BACKLAPPING CUTTING UNIT	4
LUBRICATION	5
MAINTENANCE	6
Removing Bedknife For Grinding	6
Preparing Reel for Grinding	6
Servicing and Adjusting Reel Bearings	6
Removal of Reel Assembly	7
MAINTENANCE CHART	7
TORO PROMISE	8

SPECIFICATIONS

CUTTING UNIT

REEL CONSTRUCTION: 5 or 8 blades welded construction.

HEIGHT OF CUT RANGE:
5 Blade – 1/2" to 3/4"
8 Blade – 1/4"* to 5/8"
* 5/16" is lowest attainable height of cut when using a Premium Rear Roller (2−1/2" dia.).

REEL DIAMETER: 5 in.

POWER: Hydraulic motor splined to reel shaft.

BEARINGS: Tapered roller.

BEDKNIFE AND BEDBAR ADJUSTMENT: Opposing screw.

ROLLER ADJUSTMENT:
Front: Fixed
Rear: Screw adjustable with bolt clamp lock

ADJUSTING CUTTING UNIT

IMPORTANT: Read this Operator's Manual thoroughly before operating cutting unit. Failure to do so may result in damage to the cutting unit.

Note: The Cutting Units are shipped completely assembled except for rear rollers. A Standard Rear Roller Kit, Model No. 03525 or Premium Rear Roller Kit, Model No. 03523 must be purchased from your local authorized Toro distributor and installed on cutting units. Two flange lock nuts, shipped on studs of each cutting unit are used to mount the reel drive motor to the cutting unit. Retain these fasteners for later installation.

After the cutting unit is unboxed, use the following procedures to assure the cutting units are adjusted properly.

1. Check for looseness in the bearings between the end plate and reel. Check looseness of bearings by moving reel laterally or axially on each end of cutting unit, refer to section on Servicing And Adjusting The Reel Bearings.

2. Check drive end of the reel for grease. Grease to be visibly evident.

3. Insure that all nuts and bolts are securely fastened.

4. Check level of front roller to reel: refer to section on Leveling Front Roller Assembly to Reel.

ADJUSTING BEDKNIFE TO REEL

1. Adjustment of bedknife to reel is accomplished by first, loosening bottom screw on each side of cutting unit (Fig. 1), then tightening the top adjustment screw on each side of cutting unit. This adjustment will position the bedknife closer to the reel blades.

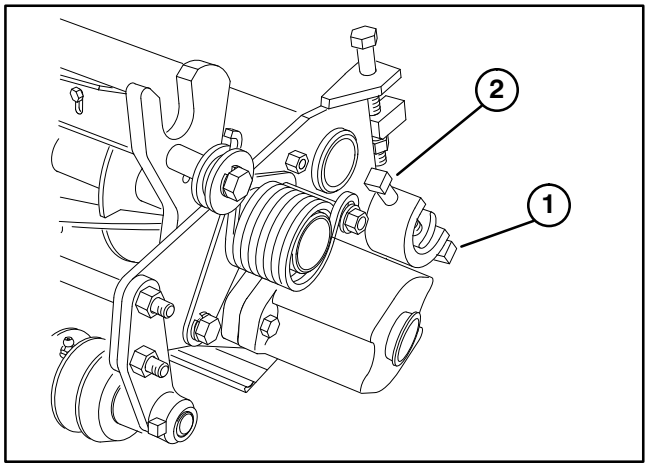

Figure 1

1. Bottom Bedknife Adjusting Screw **2. Top Bedknife Adjusting Screw**

IMPORTANT: Use only a 3/8 open end wrench 3" – 6" in length for adjusting bedknife to reel. A longer wrench will provide too much leverage and may cause distortion of the mounting plate for the adjustment screw.

ADJUSTING CUTTING UNIT

2. After adjusting bedknife to reel, make sure that both the top and the bottom adjustment screws are secured on both ends of the cutting unit (Fig. 1).

3. After the adjustment is accomplished, check to see if reel can pinch paper when inserted from the front and cut paper when inserted at a right angle (Fig. 2). It should be possible to cut paper with minimum contact between the bedknife and the reel blades. Should excessive reel drag be evident it **will** be necessary to either back lap or re−grind the cutting unit to achieve the sharp edges needed for precision cutting (see Toro reel sharpening manual).

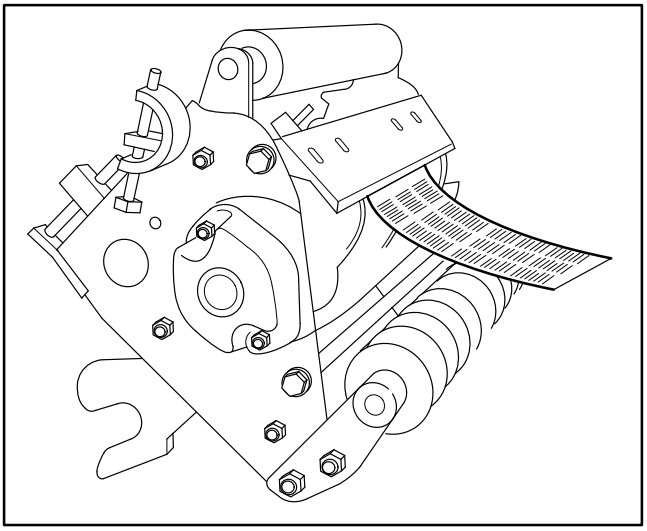

Figure 2

ADJUSTING SHIELD HEIGHT

Adjust shield to assure proper grass clipping discharge into basket or for desired front discharge when not using baskets.

1. Set cutting unit in normal cutting position (Fig. 3).

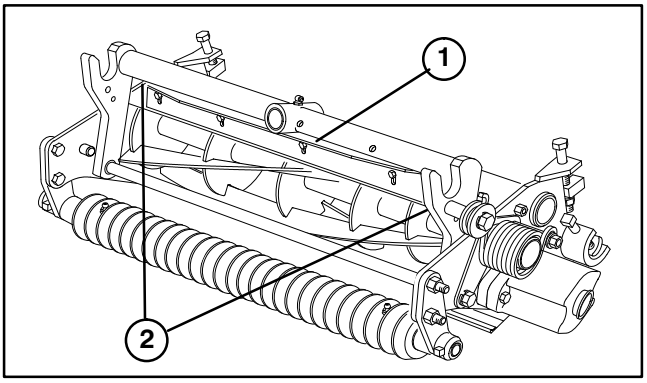

Figure 3
1. **Shield**
2. **Shield Fasteners**

2. Loosen capscrews and nuts securing shield to each side−plate, adjust shield to desired height and tighten fasteners (Fig. 3).

3. Repeat adjustment on remaining cutting units and adjust top bar, refer to section on Adjusting Top Bar.

When mowing in conditions in which excessive amounts of clippings are being removed, rear discharge may be desirable. Opening the rear shield will allow direct discharge of clippings, thus preventing re−cutting.

To open the rear shield:

1. Loosen the locking bolt on the side of the cutting unit (Fig. 4).

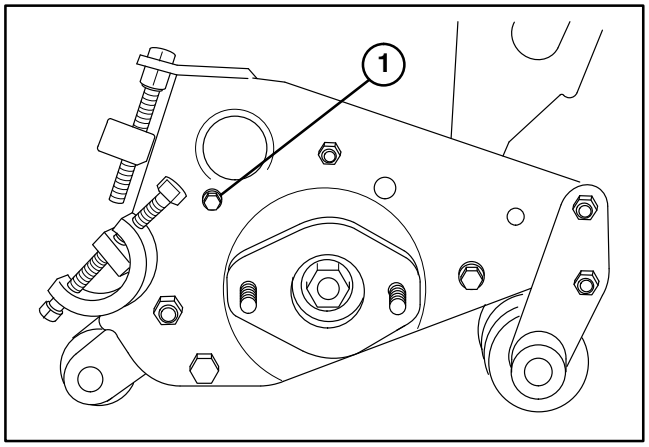

Figure 4
1. **Rear Shield Locking Bolt**

2. Open the rear shield to the desired operating position.

3. Tighten the locking bolt to secure shield.

ADJUSTING TOP BAR

Adjust top bar to assure clippings are cleanly discharged from reel area:

1. Loosen screws securing top bar (Fig. 5). Insert 0.060 inch feeler gauge between top of reel and bar and tighten screws (Fig. 5). Assure bar and reel are equal distance apart across complete reel.

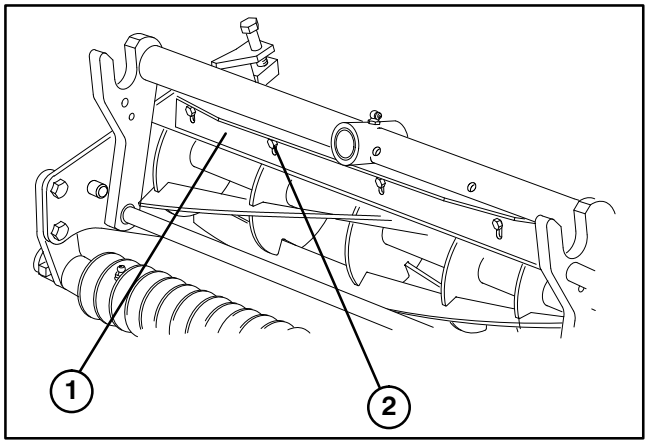

Figure 5
1. **Top bar**
2. **Bar Mounting Screws**

2. Repeat settings on remaining cutting units.

ADJUSTING CUTTING UNIT

NOTE: Bar is adjustable to compensate for changes in turf conditions. Bar should be parallel to reel to assure optimum performance and should be adjusted whenever shield height is adjusted or whenever reel is sharpened on a reel grinder.

LEVELING FRONT ROLLER TO REEL

1. Adjust rear roller assembly to lowest height−of−cut, refer to section on Adjusting Height of Cut. Do not tighten nuts securing height of cut brackets at this time.

2. Place a 1/4 inch or thicker plate under the reel blades and against the cutting edge of the bedknife (Fig. 6). Rear roller should not contact surface.

NOTE: Be sure the plate covers the full length of reel blades.

3. Level front roller to reel by loosening (4) capscrews holding front roller brackets and rotating front roller until it contacts surface that plate is on. Tighten capscrews and make sure roller has not changed position. To prevent moving the roller bracket when tightening, hold nut and tighten capscrew.

4. With the Cutting Unit reel blades positioned on the plate, hold Cutting Unit securely and turn tap bolts until the rear roller assembly contacts the working surface across the full length of the roller.

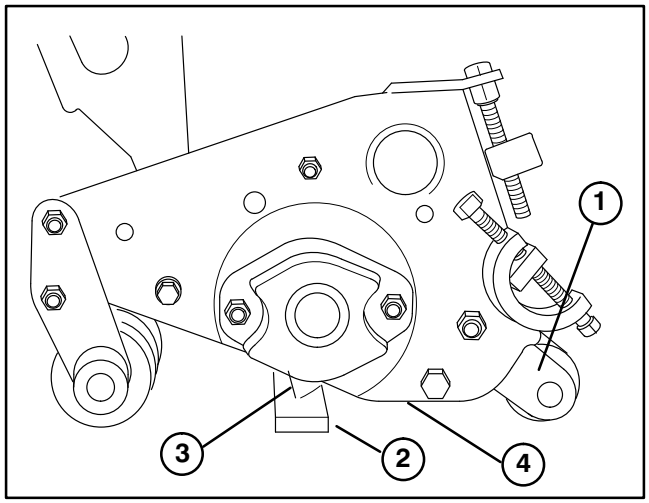

Figure 6

1. **Rear Roller Bracket**
2. **1/4 Inch Steel Plate**
3. **Reel Blades**
4. **Bedknife**

NOTE: This adjustment should be made on a flat working surface.

5. Secure nut on outside of rear roller height−of−cut bracket to lock roller in place.

ADJUSTING HEIGHT OF CUT

1. Front roller must be leveled first, refer to section on Leveling Front Roller To Reel.

2. To adjust the height of cut, the cutting unit should be turned over.

3. Loosen the locknuts securing the height of cut brackets to each end of the cutting unit (Fig. 7).

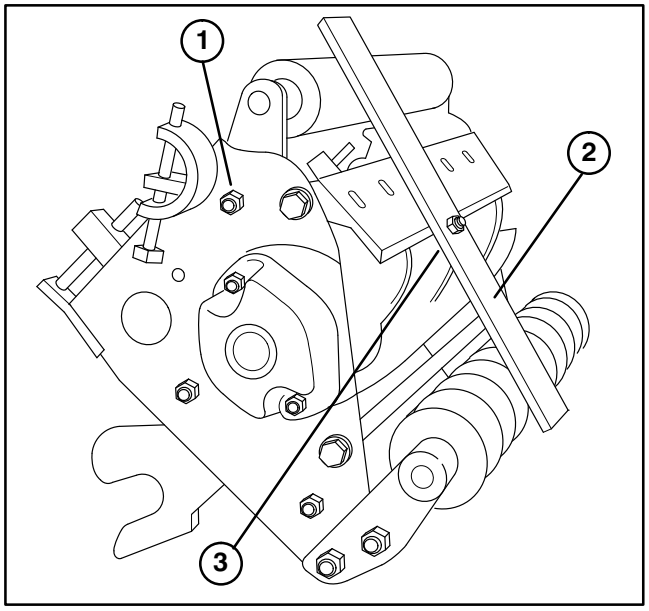

Figure 7

1. **Locknut**
2. **Gauge Bar**
3. **Gauge Bar Screw head**

4. Set the head of the screw on the gauge bar to the desired height of cut, making this measurement from the bar face to underside of screw head.

5. Place the bar across the front and rear rollers and adjust the tap bolt until the underside of the screw head engages the bedknife cutting edge (Fig. 7).

IMPORTANT: Do procedure No. 4 on each end of the bedknife. Retighten height of cut adjustment locknuts on both ends. Recheck adjustment.

BACKLAPPING CUTTING UNITS

DANGER

REELS MAY STALL WHILE BACKLAPPING. DO NOT ATTEMPT TO RESTART REELS BY HAND OR ADJUST WHILE BACKLAPPING. SET SPEED CONTROL TO POSITION 11 TO START REELS; SET TO POSITION 1 FOR BACKLAPPING.

Note: Backlap either the front cutting units together or the rear ones together.

1. Position machine on a clean, level surface, lower the cutting units, stop the engine, engage the parking brakes, move enable/disable switch to disable position and remove key from ignition switch.

2. Unlock and raise seat to expose controls.

3. Make initial reel to bedknife adjustments appropriate for backlapping on all cutting units. Start engine and set engine at idle speed.

4. Set both reel speed controls to position 11. Select either front or rear on backlap switch to determine which units to backlap.

5. Move enable / disable switch to enable position. Move lower mow / raise lever forward to start backlapping operation on designated reels.

6. For the cutting units being backlapped, move the reel speed control to position 1.

7. Apply lapping compound with long handled brush supplied with machine.

CAUTION

Be careful when lapping the reel because contact with the reel or other moving parts can result in personal injury.

8. To make an adjustment to the cutting units while backlapping, Turn reels OFF by moving Lower mow / Raise lever REARWARD, Move Enable / Disable switch to DISABLE and turn engine OFF. After adjustments have been completed, repeat steps 3−7.

9. Repeat procedure for remaining cutting units.

10. When backlap operation is completed, return backlap switch to OFF, set reel speed controls to desired mowing setting and wash all lapping compound off cutting units.

Note: Additional instructions and procedures on Backlapping are available in the TORO Sharpening Reel & Rotary Mowers Manual Form No. 80−300PT.

NOTE: For a better cutting edge, run a file across the front face of the bedknife when the lapping operation is completed. This will remove any burrs or rough edges that may have built up on the cutting edge.

LUBRICATION

There are six (6) grease fittings on each cutting unit (Fig. 8), which must be lubricated using a No. 2 multi−purpose lithium base grease. A hand operated grease gun is recommended for best results.

IMPORTANT: Lubricating cutting units immediately after washing helps purge water out of bearings and increases bearing life.

1. Wipe each grease fitting with a clean rag.

2. Grease reel bearings as follows:

A. Hydraulic motor end; apply grease until pressure is felt against handle.

B. Counterbalance end; apply grease until it starts to come through seal inside counter balance hole.

3. Apply grease to front and rear roller bearings until it begins to show around washers, on rear rollers or seal lips, on front rollers.

IMPORTANT: Do not apply too much pressure or grease seals will be permanently damaged.

4. Wipe excess grease away.

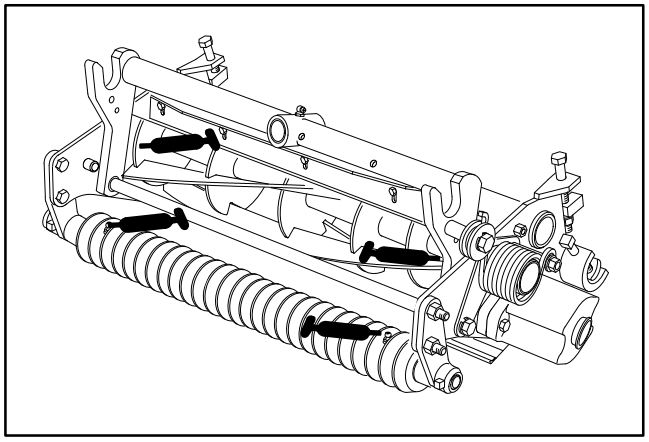

Figure 8

MAINTENANCE

IMPORTANT: Reel motors must be removed before removing the cutting units to prevent hose damage due to twisting, bending, and kinking.

REMOVING BEDKNIFE FOR GRINDING

The rear roller assembly must be removed in order to remove the bedknife assembly for sharpening. To remove the rear roller, proceed as follows:

1. Remove capscrew and nut anchoring the rear roller height−of−cut bracket to the side plate on both ends of the cutting unit (Fig. 9).

2. Loosen set screws securing the rear roller shaft to the height−of−cut brackets.

IMPORTANT: When reinstalling rear roller shaft to the height−of−cut brackets, torque set screws to 25−30 ft.−lb.

3. Un−thread the tap bolts from the height−of−cut brackets and remove the from both side plates.

4. Remove the bedbar mounting bolts from each end of the cutting unit (Fig. 9). Then loosen the bedknife adjusting screws at each end of the cutting unit (Fig. 9). The bedknife assembly can then be removed by rotating it away from the reel.

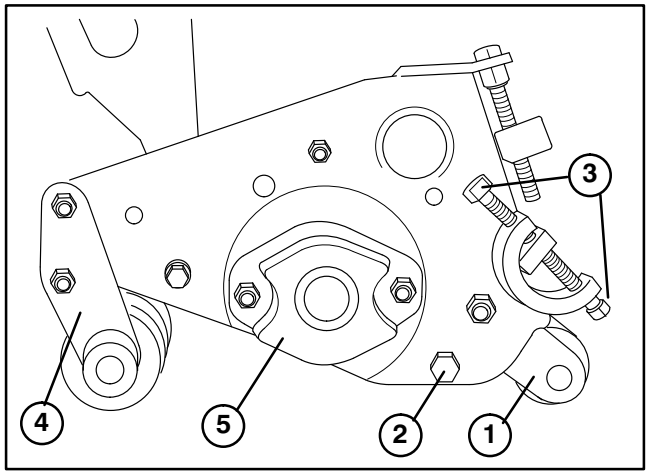

Figure 9

1. **Rear Roller Height of Cut Bracket**
2. **Bedbar Mounting Bolts**
3. **Bedknife Adjusting Screws**
4. **Front Roller Brackets**
5. **Counterbalance End Cap**

IMPORTANT: When reinstalling the bedbar assembly, be sure to assemble rear roller brackets under arms of bedbar.

NOTE: For proper grinding of bedknife, grind in accordance with procedures in the TORO Sharpening Reel & Rotary Mowers Manual Form No. 80−300PT.

PREPARING REEL FOR GRINDING

The front roller may have to be removed so that the reel can be sharpened. To accomplish this, proceed as follows:

IMPORTANT: Some reel grinders may require that the rear roller assembly be mounted to the cutting unit for proper support in the reel grinder.

1. Remove the locknuts securing the front roller brackets to the sideplates at both ends of the cutting unit (Fig. 9).

2. The roller assembly can then be removed from the cutting unit by pulling evenly on both sides.

3. For proper grinding of reel, grind in accordance with procedures in TORO Sharpening Reel & Rotary Mowers Form No. 80−300PT.

IMPORTANT: After grinding operation is complete, reassemble cutting unit, check bearing adjustment and adjust top shield and bar; refer to sections on Adjusting Shield Height and Adjust Top Bar. Back lap the cutting unit to complete sharpening operation. To assure proper alignment of the rear roller in the roller brackets, make sure roller moves freely within brackets before tightening set screws on bearing shafts. Apply medium strength Locktite #242 to set screws before tightening.

SERVICING AND ADJUSTING THE REEL BEARINGS

IMPORTANT: Before removing cutting unit, remove reel motors to prevent damaging hydraulic hoses.

It is recommended that a check be made periodically of the drag on the reel bearings. Proper adjustment of the reel bearings insures that no end play of reel exists and there is minimum rolling torque of reel assembly. All measurements and adjustments of reel rolling torque must be done with a completely assembled cutting unit. The reel bearings can be checked and adjusted in the following manner:

1. First, adjust the bedknife so it is not in contact with the reel.

2. The rolling torque required to turn the reel should be 4 to 7 inch pounds. This should be measured with a torque wrench.

If the rolling torque of the reel is not per specification or end play of reel exists, adjust the reel bearing as follows:

A. Remove the mounting nuts from the counterbalance end cap and remove end cap from the mounting studs (Fig. 9).

B. Using a large socket wrench, remove the reel bearing adjustment nut. Tap on the head of the hex head bolt on the end of the reel shaft, with a small hammer, until end play of the reel can be felt.

MAINTENANCE

C. Hold the reel from turning and slowly tighten the reel bearing adjustment nut until no end play of the reel exists.

D. Using an appropriate torque wrench, check the rolling torque of the reel. The rolling torque of the reel should be 4 to 7 in. lb. Check to make sure no end play exists and reel spins freely.

E. Reinstall the counterbalance end cap.

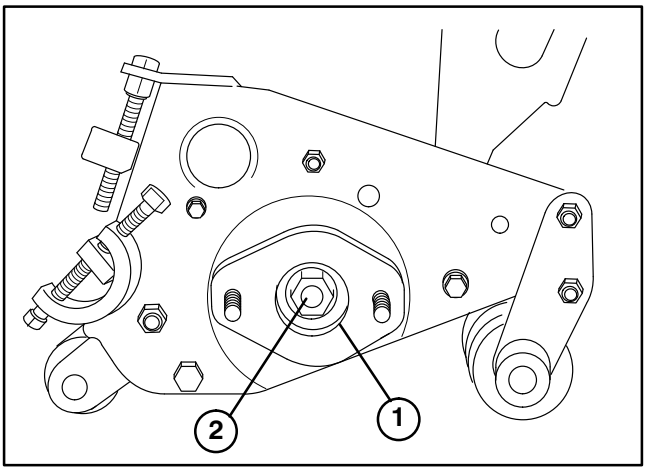

Figure 10
1. **Reel Bearing Housing**
2. **Splined Nut**

REMOVAL OF REEL ASSEMBLY

IMPORTANT: Before removing cutting unit, remove reel motors to prevent damaging hydraulic hoses.

1. Remove the front roller assembly.

2. Remove counterbalance End Cap (Fig. 9).

3. Remove the large bearing adjustment nut from the counterbalance end of the reel shaft and the special spline nut (Fig. 10) at the opposite end of the reel shaft.

4. Remove the mounting bolts from the bearing housing on both ends of cutting unit.

IMPORTANT: Remove grease fittings from the bearing housing at each end of the cutting unit. Note that the 45° fitting is on the right end, and the 90° fitting at the left end (when viewed in the direction of travel).

5. Using a plastic headed hammer, rotate bearing housing slightly, install bearing housing bolts from outside housing, turn bolts alternately against side plate, and use this method to remove bearing housing.

6. The bearing housing will slip out of the side plates and the reel assembly can be removed as soon as the bearing housings are disassembled from the side plates.

MAINTENANCE CHART

The Toro Commercial Products Two Year Limited Warranty

The Toro Company warrants your 1996 or newer Toro Commercial Product ("Product") purchased after January 1, 1997, to be free from defects in materials or workmanship for the period of time listed below. Where a warrantable condition exists, Toro will repair the Product at no cost to you including diagnosis, labor, parts, and transportation. This warranty begins on the date the Product is delivered to the original retail purchaser.

Warranty Duration: Two years or 1500 operational hours*, whichever occurs first.
***Product equipped with hour meter**

Owner Responsibilities:

As the Product owner, you are responsible for required maintenance and adjustments stated in your Owner's Manual. Failure to perform required maintenance and adjustments can be grounds for disallowing a warranty claim.

Instructions for Obtaining Warranty Service:

You are responsible for notifying the Commercial Products Distributor or Authorized Commercial Products Dealer from whom you purchased the Product as soon as you believe a warrantable condition exists.

If you need help locating a Commercial Products Distributor or Authorized Dealer, or if you have questions regarding your warranty rights or responsibilities, you may contact us at:

Toro Commercial Products Service Department
8111 Lyndale Avenue South
Minneapolis, MN, 55420−1196
Telephone: (612) 888−8801
Facsimile: (612) 887−8258
E−Mail: Commercial.Service@Toro.Com

Maintenance Parts:

Parts scheduled for replacement as required maintenance ("Maintenance Parts"), are warranted for the period of time up to the scheduled replacement time for that part.

Items/Conditions Not Covered:

Not all product failures or malfunctions that occur during the warranty period are defects in materials or workmanship. The items / conditions listed below are not covered by this warranty:

- Product failures which result from the use of non−Toro replacement parts, or from installation and use of add−on, modified, or unapproved accessories are not covered.
- Product failures which result from failure to perform required maintenance and/or adjustments are not covered.
- Product failures which result from operating the Product in an abusive, negligent or reckless manner are not covered.
- This warranty does not apply to parts subject to consumption through use unless found to be defective. Examples of parts which are consumed, or used up, during normal Product operation include, but are not limited to, blades, reels, bedknives, tines, spark plugs, castor wheels, tires, filters, belts, etc.
- This warranty does not apply to failures caused by outside influence. Items considered to be outside influence include, but are not limited to, weather, storage practices, contamination, use of unapproved coolants, lubricants, additives, or chemicals, etc.
- This warranty does not apply to normal "wear and tear" items. Normal "Wear and Tear" includes, but is not limited to, damage to seats due to wear or abrasion, worn painted surfaces, scratched decals or windows, etc.

Other Legal Disclaimers:

The above remedy of product defects through repair by an authorized distributor or dealer is the purchaser's sole remedy for any defect. This warranty gives you specific legal rights, and you may also have other rights which vary from state to state.

Except for the Emissions warranty referenced below, if applicable, there is no other express warranty. All implied warranties of merchantability and fitness for use are limited to the duration of the express warranty.

Some states do not allow limitations on how long an implied warranty lasts, so the above limitation may not apply to you.

The Toro Company is not liable for indirect, incidental or consequential damages in connection with the use of the Product, including any cost or expense of providing substitute Product or service during periods of malfunction or non−use.

Some states do not allow the exclusion of incidental or consequential damages, so the above exclusion may not apply to you.

Note to California residents: The Emissions Control System on your Product may be covered by a separate warranty meeting requirements established by the U.S. Environmental Protection Agency (EPA), or the California Air Resources Board (CARB). The hour limitations set forth above do not apply to the Emissions Control System Warranty. Refer to the California Emission Control Warranty Statement printed in your Owner's Manual or contained in the engine manufacturer's documentation for details.