Form No. 3394-595 Rev A

E-Reels Harness Kit

Greensmaster® 3320 or 3420 TriFlex® Traction Unit

Model No. 131-8758

Installation Instructions

⚠ WARNING

CALIFORNIA
Proposition 65 Warning

This product contains a chemical or chemicals known to the State of California to cause cancer, birth defects, or reproductive harm.

Note: Determine the left and right and front and back sides of the machine from the normal operating position.

Preparing the Machine

1. Park the machine on a level surface, stop the engine, and remove the key from the ignition.
2. Disconnect the negative battery cable from the battery.
3. Disable the reel batteries by pulling apart the battery disconnect at the base of the left side of the ROPS.
4. Remove the flange-head bolts securing the left and right side consoles, and remove the consoles.

   Note: Retain the flange-head bolts and the left console. Discard the right console.

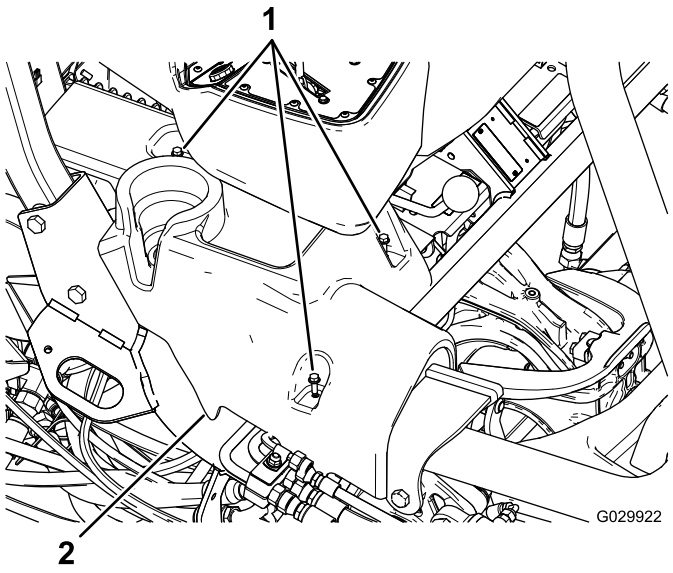

Figure 1
Right console shown

1. Flange-head bolts
2. Right console

5. Tip the seat forward.
6. Remove the ground terminal connectors (J06 and J08) from the ground block.
7. Cut and remove all the cable ties securing the existing wiring harness.

   Important: Do not cut any wires or other components.

8. Remove the mounting bracket that holds the fuse block under the seat.

   Note: Keep the fuse block attached to the bracket.

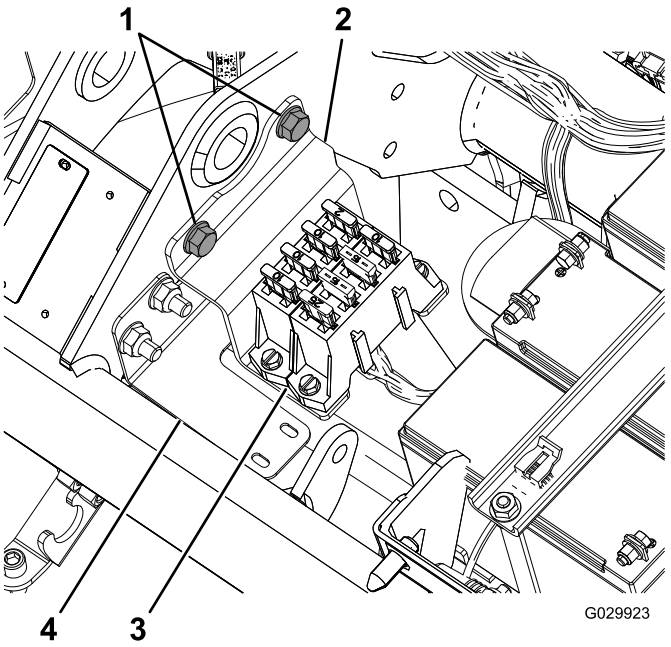

Figure 2

1. Flange bolts (remove and retain)
2. Bracket
3. Fuse block
4. Harness bracket

9. Disconnect the harness from the 3 reel motors (2 connectors each).

© 2015—The Toro® Company
8111 Lyndale Avenue South
Bloomington, MN 55420

Register at www.Toro.com.

CE

Original Instructions (EN)
Printed in the USA
All Rights Reserved

3394-595 A

10. Disconnect the plug from the generator, which is located near the engine.

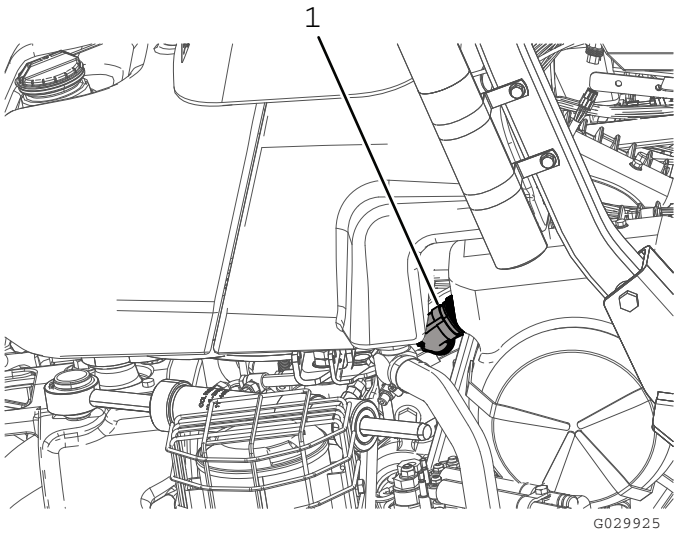

Figure 3

1. Generator plug

11. Disconnect the 2 connectors (the CAN bus interconnect and the interface to the main harness) from the main harness (located under the seat).
12. Disconnect the location ID module (P08).
13. Disconnect the CAN interface module (P10).
14. On the front terminal of the 48 VDC contactor, disconnect the wire marked "Battery Side" and the battery-disconnect wire (119-1784).

    Note: The battery disconnect wire can stay disconnected from the 48 VDC contactor until you install the new harness (122-0523).
15. Disconnect the 2 main contactor coil connectors from the 48 VDC contactor.
16. Remove the switched-side power (J07) from the other end of the 48 VDC contactor.
17. Remove the E-Reels enable relay connector.
18. Disconnect the terminal from the 10A 58-volt fuse.
19. Remove and discard the wiring harness.

Routing and Connecting the Wiring Harness

1. Position the new wiring harness so that the extension to the generator can run along the right side of the rear frame and the fuse block has enough slack for mounting it to the ROPS bracket.
2. Run the harness next to the main harness under the operator's seat.
3. Bend the harness so that it fits behind the mounting bracket for the fuse block under the seat.

   Note: Follow the profile of the harness bracket (120-4570); refer to Figure 2.
4. Route the harness under the main tube of the frame and in front of the reel batteries (Figure 4).

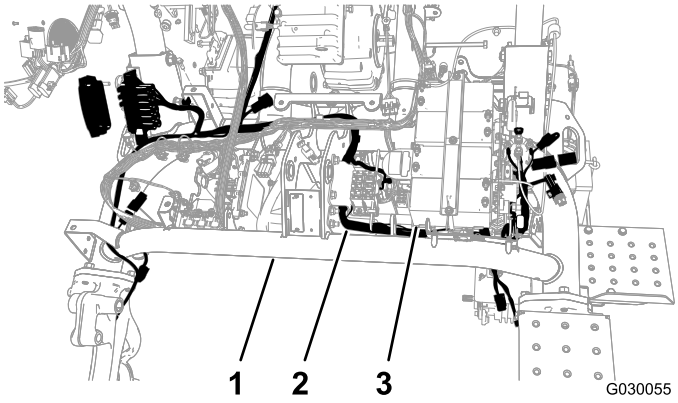

Figure 4

1. Main tube
2. Harness
3. Reel batteries

5. Route the harness back under the main tube between the opposite side of the battery plate and the left frame tube.
6. Pull the harness through the frame gap.

   Note: There should be enough space to attach the switch side connector while routing under and around the 48 VDC contactor.
7. Secure the harness to the harness bracket with the push mount and a cable tie (Figure 5).

   Note: If the old push mount is still in the hole, remove it.

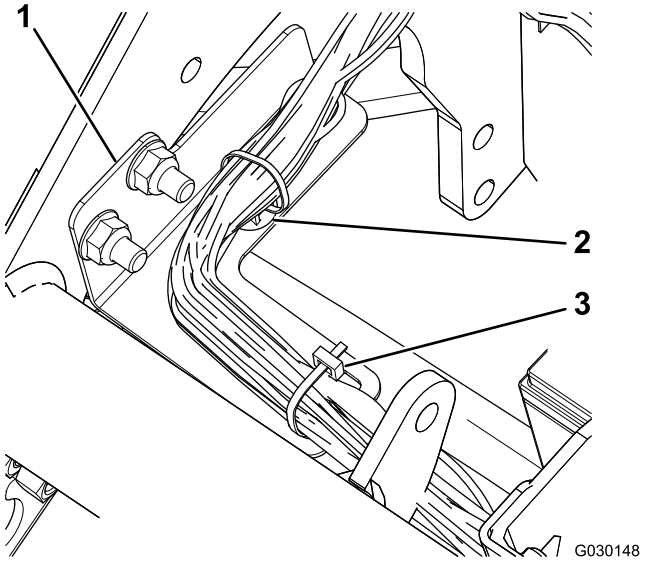

Figure 5

1. Harness bracket
2. Push mount
3. Cable tie

8. Plug the generator interface on the harness into the terminal on the generator, near the engine.

   Note: On Model 04530 (gasoline engine), the generator is located in the center of the machine frame (Figure 6); on Model 04540 (diesel engine), the generator is located outside the machine frame (Figure 7).

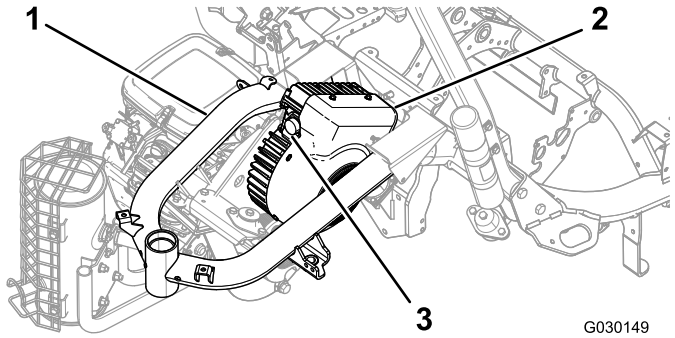

Figure 6
Model 04530

1. Frame
2. Generator
3. Terminal

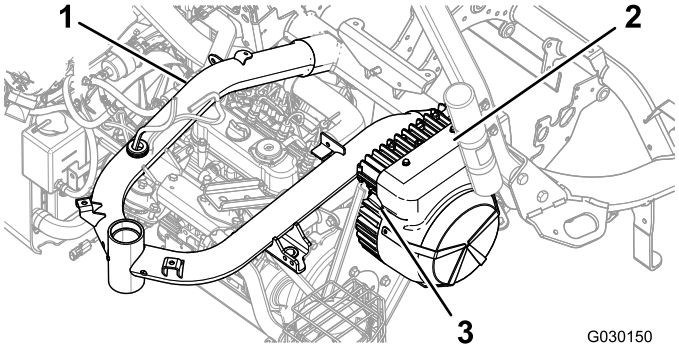

Figure 7
Model 04540

1. Frame
2. Generator
3. Terminal

9. Slowly turn the ring on the generator interface connector clockwise to align the other connector and secure the connection.

   Important: Ensure that the terminals are fully connected. A loose connection may cause excess heat from the electrical current, leading to product damage.

10. Connect the appropriate terminals to the reel motors.

    Note: Ensure that the connectors click together so that they are secure.

11. Remove and discard the cap from the 10A 58-volt fuse (a red wire and a yellow wire); refer to Figure 8.

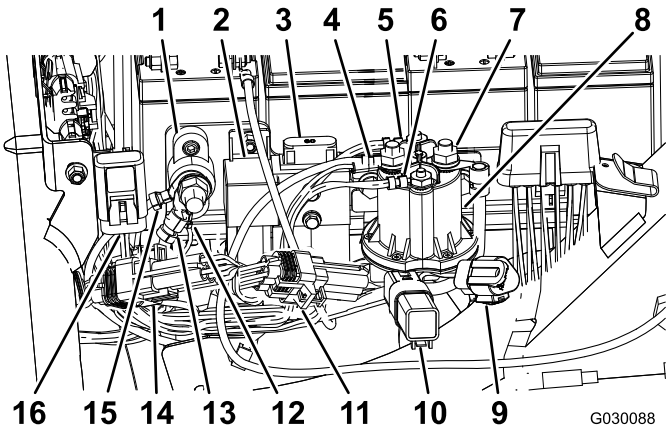

Figure 8

1. Ground block
2. E-reels enable relay
3. E-reels fuse (60A-58V), existing
4. Battery-side power (boot not shown)
5. Main contactor coil connector (white)
6. Main contactor coil connector (brown)
7. Switched-side power (boot not shown)
8. 48 VDC contactor
9. E-reels CAN diagnostic port
10. Protection diode
11. ID module
12. Harness ground
13. Harness ground
14. CAN interface module (P10)
15. E-reels batteries ground
16. 10A 58-volt fuse

12. Insert the terminal with the 10A 58-volt fuse into the existing cap mounted on the frame of the machine.
13. Connect the E-Reels enable relay connector (P07).
14. Connect the 90-degree switched side (J07) connector on the harness to the rear terminal on the 48 VDC contactor, and secure it to the terminal.
15. Route the wire under the flange on the 48 VDC contactor.
16. Connect the 2 main contactor coil connectors to the 48 VDC contactor.
17. Connect the wire marked “Battery Side” and the battery-disconnect wire to the front terminal of the 48 VDC contactor.
18. Slide the insulator boots for the switched-side power connector and the battery-side connector over the terminals to cover them.
19. Connect the ID module (P08).
20. Connect the CAN interface module (P10).
21. Connect the 2 terminals (CAN bus interconnect and interface to main harness) on the new harness with the 2 terminals on the main machine harness under the seat.
22. Install the fuse block, with the harness routed behind the bracket (Figure 9).

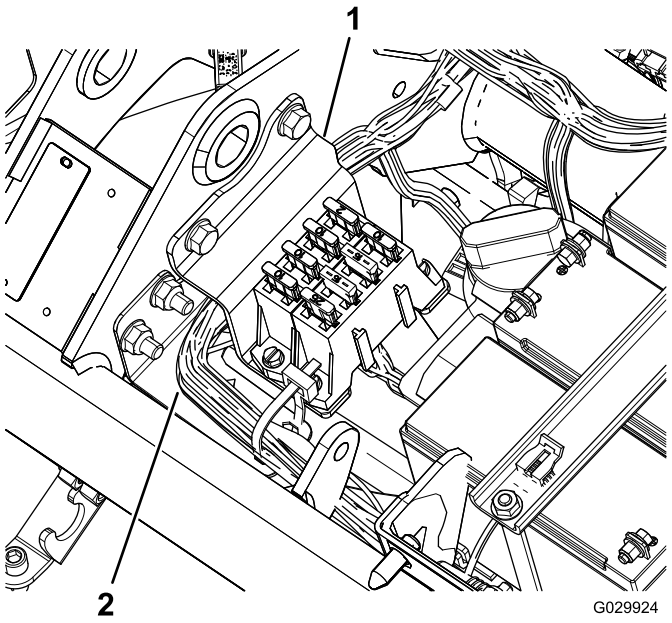

Figure 9

1. Bracket
2. Wiring harness

23. Connect the ground terminal connectors (J06 and J08) to the ground block.
24. Use cable ties to secure the wires to the main machine harness and to the machine frame.

    Important: Ensure that the wires are away from moving parts.

25. Secure the harness to the machine frame behind the fuel-tank bracket and in front of the fuel-tank bracket.
26. Use cable ties to secure the new harness.

    Important: Ensure that the wires are in a position where the seat assembly does not crush them.

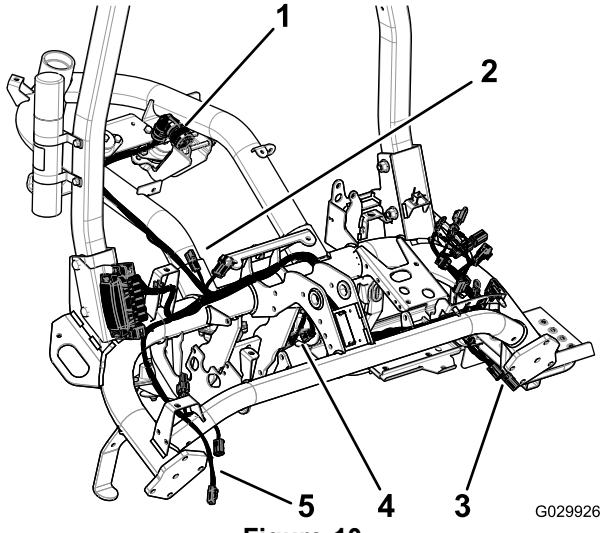

Figure 10

1. Generator plug
2. Terminals to main harness
3. Terminals to reel 2
4. Terminals to reel 1
5. Terminals to reel 3

Installing the Fuse-Block Bracket

1. Loosen the 2 nuts and bolts securing the right side of the ROPS to the frame of the machine (Figure 11).

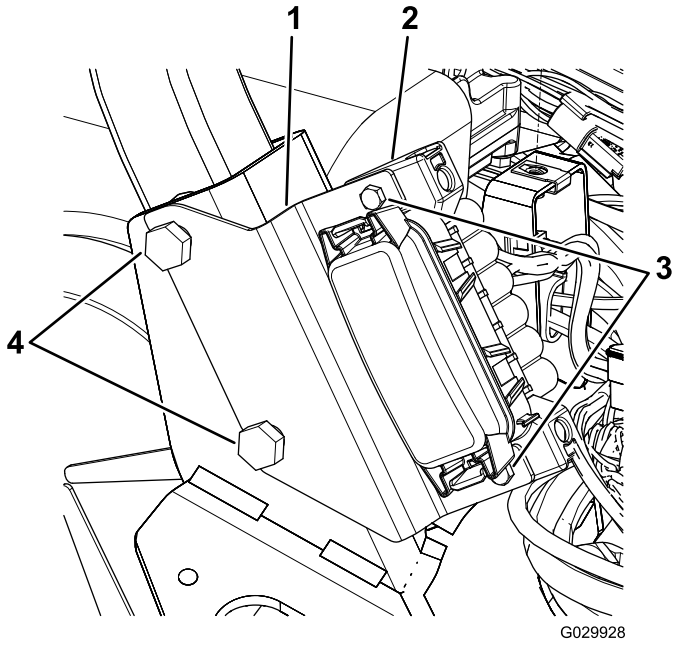

Figure 11

1. Bracket
2. Fuse block
3. Screws
4. ROPS bolts

2. Align the slots in the fuse-block bracket with the bolts as shown in Figure 11.
3. Torque the ROPS fasteners to 136 to 149 N-m (100 to 110 ft-lb).
4. Use the 2 screws to secure the fuse block to the bracket (Figure 11).

Installing the Side Consoles

1. Align the bolt holes in the new right console with the bolt holes on the machine (Figure 12).

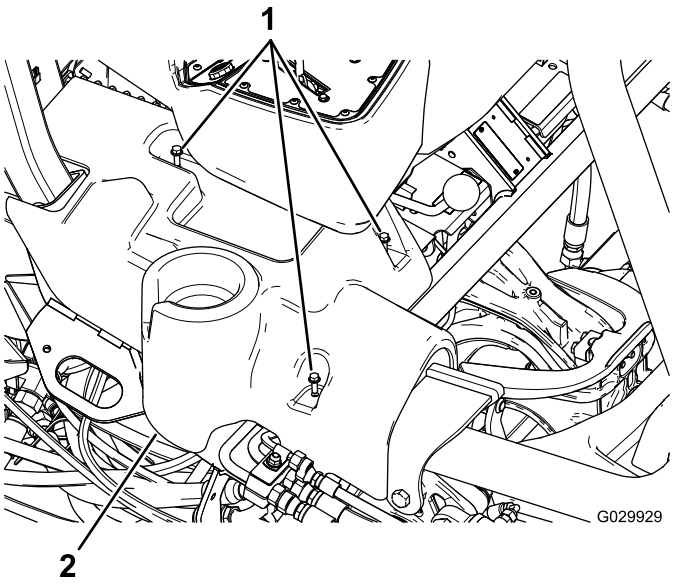

Figure 12
Right console shown

1. Flange-head bolts
2. Right console

2. Align the bolt holes in the existing left console with the bolt holes on the machine.
3. Secure the side consoles with the existing flange-head bolts.

Notes:

Notes:



Count on it.