Form No. 3394-624 Rev A

Quick Attach Front Frame

Groundsmaster® 360 Multi-Purpose Machine

Model No. 30509—Serial No. 315000001 and Up

Installation Instructions

This product complies with all relevant European directives. For details, please see the Declaration of Incorporation (DOI) at the back of this publication.

⚠ WARNING

CALIFORNIA
Proposition 65 Warning

This product contains a chemical or chemicals known to the State of California to cause cancer, birth defects, or reproductive harm.

Installation

Loose Parts

Use the chart below to verify that all parts have been shipped.

Procedure	Description	Qty.	Use
1	No parts required	–	Remove the cutting deck.
2	Front attachment frame Hydraulic tube, shorter Hydraulic tube, longer	1 1 1	Mount the hydraulic tubes to the front attachment frame.
3	Screw, 1/2 x 1–1/4 inch Flange nut, 1/2 inch Screw, 1/2 x 4–1/2 inch Spacer Screw, 1/2 x 3–1/4 inch Support washer Spacer	4 11 6 4 1 2 1	Mount the front attachment frame.
4	Tube clamp Plate Tube clamp Plate Carriage screw Flange nut	1 1 1 1 2 2	Install the hydraulic tube assemblies.
5	No parts required	–	Mount the drive shaft.
6	Switch Decal	2 1	Install the switches.
7	No parts required	–	Test the attachment.

© 2015—The Toro® Company
8111 Lyndale Avenue South
Bloomington, MN 55420

Register at www.Toro.com.

CE

Original Instructions (EN)
Printed in the USA.
All Rights Reserved

3394-624 A

Media and Additional Parts

Description	Qty.	Use
Installation instructions	1	Use to install kit
Parts catalog	1	Use to reference part numbers
Lock pin	1	Use to secure the attachment to the lift frame
Hair pin cotter	1	Use to secure the attachment to the lift frame

Note: The Groundsmaster 360 must be equipped with the Electrical Accessory Kit, Part 115-0019, to operate the Quick Attach Front Frame Kit.

1

Removing the Cutting Deck

No Parts Required

Procedure

1. Park machine on a level surface with the cutting deck in the fully raised position. Stop engine, engage parking brake and remove key from the ignition switch.

   Note: When the cutting deck is in the raised position, the pull link torsion spring tension is reduced making it much easier to disconnect the pull links from the machine.

2. Disconnect the pull link from each side of the machine as follows:

   ⚠ CAUTION

   Be careful when disconnecting the pull links. The pull link torsion springs may cause some rotation of pull links during the removal process.

   - Remove the shoulder screw that secures the retainer pin to the carrier frame (Figure 1).

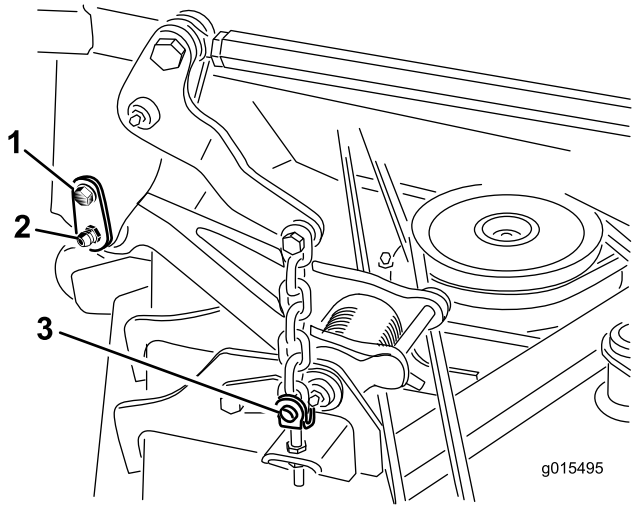

Figure 1

1. Shoulder screw
2. Retainer pin
3. Ring pins and clevis pins

   - Carefully slide the retainer pin from carrier frame and the pull link.

3. Note the location of the Height of Cut pin in the Height of Cut bracket for re-assembly purposes (Figure 2). Remove the Height of Cut pin from the Height of Cut bracket.

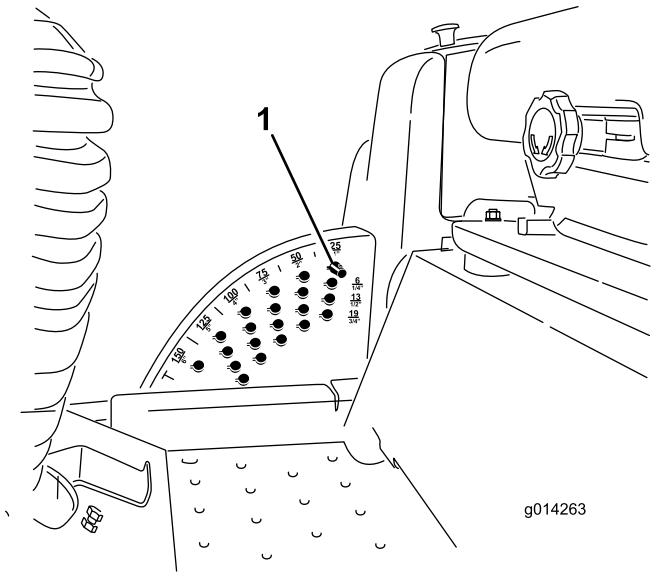

Figure 2

1. Height of Cut pin

4. Position suitable furniture dollies under the cutting deck.
5. Start the engine and fully lower the cutting deck onto the furniture dollies. Stop engine and remove key from the ignition switch.

⚠ WARNING

Do not start the engine and engage the PTO switch when the PTO drive shaft is disconnected from the cutting deck. If the engine is started and the PTO shaft is allowed to rotate, serious personal injury and machine damage could result. Remove the PTO fuse from fuse block to prevent unintentional engagement of the PTO clutch.

6. Lift the floor plate, exposing the top of the cutting deck.
7. Disconnect the end yoke of the PTO drive shaft from cutting deck gearbox shaft as follows.
   - Remove the roll pin from the end yoke and the gearbox shaft (Figure 3). Retain the roll pin for re-use.

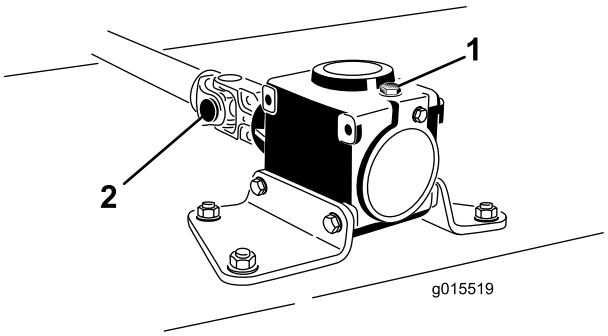

Figure 3

1. Gearbox
2. PTO drive shaft end yoke

   - Loosen the 2 capscrews and lock nuts (Figure 3).
   - Slide the drive shaft end yoke from gearbox shaft and tie them up to the frame for support.
8. Remove the 4 ring pins and clevis pins that secure the deck lift chains to the adjustment clevises on the cutting deck (Figure 1).
9. Roll the cutting deck away from the machine.

2

Mounting the Hydraulic Tubes to the Front Attachment Frame

Parts needed for this procedure:

1	Front attachment frame
1	Hydraulic tube, shorter
1	Hydraulic tube, longer

Procedure

1. Loosely install the shorter hydraulic tube to the straight fitting on the valve (Figure 4).
2. Loosely install the longer hydraulic tube to the straight fitting on the manifold (Figure 4).

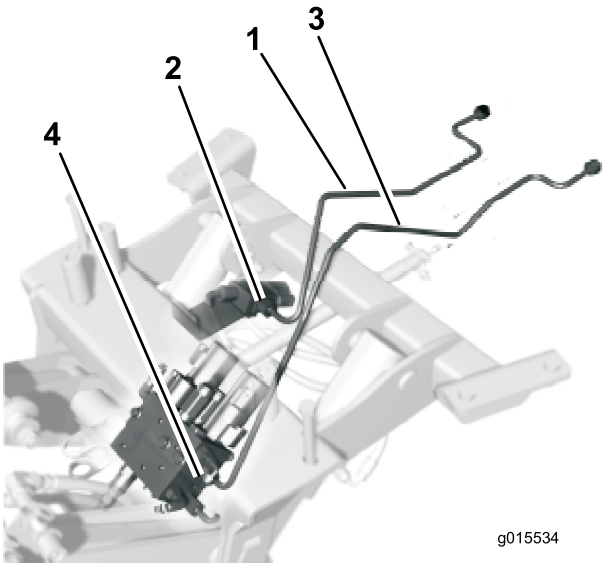

Figure 4

1. Shorter hydraulic tube
2. Valve
3. Longer hydraulic tube
4. Manifold

3

Mounting the Front Attachment Frame

Parts needed for this procedure:

4	Screw, 1/2 x 1–1/4 inch
11	Flange nut, 1/2 inch
6	Screw, 1/2 x 4–1/2 inch
4	Spacer
1	Screw, 1/2 x 3–1/4 inch
2	Support washer
1	Spacer

Procedure

1. Figure 5 shows the top view of the location, positioning and size of the fasteners used to secure the front attachment frame to the underside of the traction unit frame.

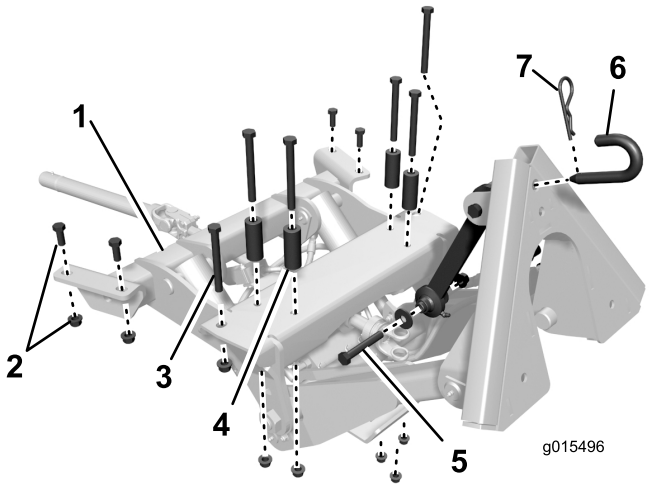

Figure 5

1. Front attachment frame
2. Screw, 1/2 x 1-1/4 inch and a 1/2 inch flange nut
3. Screw, 1/2 x 4-1/2 inch
4. Spacer
5. Screw, 1/2 x 3–1/4 inch, 2 support washers and lock nut, 1/2 inch
6. Lock pin
7. Hair pin cotter

2. Guide the shorter hydraulic tube assembly (Figure 4) around and above the traction control rod.
3. Position the front attachment frame under the front of the machine (Figure 6).
4. Raise the front attachment frame while aligning the mounting holes with the mounting holes in the frame channels and the front frame cross plate (Figure 6).

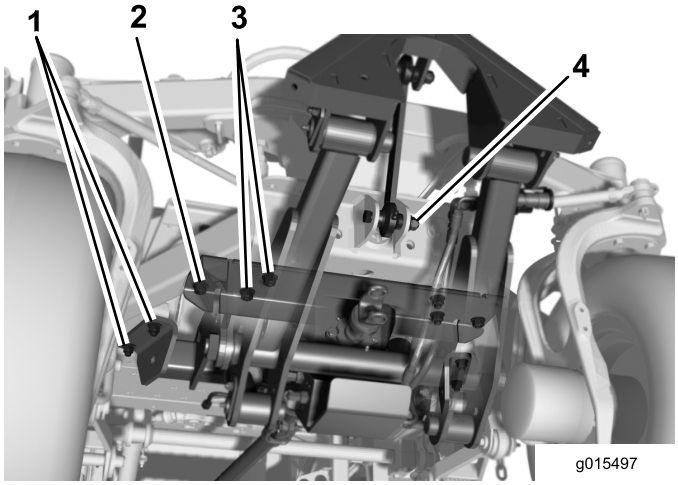

Figure 6

1. Screw, 1/2 x 1-1/4 inch and a 1/2 inch flange nut
2. 1/2 x 4-1/2 inch screw and a 1/2 inch flange nut
3. 1/2 x 4-1/2 inch screw, spacer and a 1/2 inch flange nut
4. Screw, 1/2 x 3–1/4 inch, 2 support washers and lock nut, 1/2 inch

5. On the front of the attachment, secure the outer hole, on each side, to the frame channels with a 1/2 x 4-1/2 inch screw and a 1/2 inch flange nut (Figure 6).
6. On the rear of the attachment, loosely install each side to the frame channels with 2 1/2 x 1-1/4 inch screws and 1/2 inch flange nuts (Figure 6).
7. Using the remaining 4 mounting holes, secure the attachment to the frame cross plate with 1/2 x 4-1/2 inch screws, spacers and 1/2 inch flange nuts (Figure 6). Position the spacers between the screw head and the cross plate.
8. Tighten the fasteners to 91-113 Nm (67-83 ft-lb).
9. Secure the top link assembly to the axle support with the 1/2 x 3–1/4 inch screw, 2 support washers and 1/2 inch lock nut (Figure 5 andFigure 6). The washers are to be positioned on the outside of the ears on the axle support. Install the spacer and torque to 91-113 Nm (67 to 83 ft-lb) Figure 7).

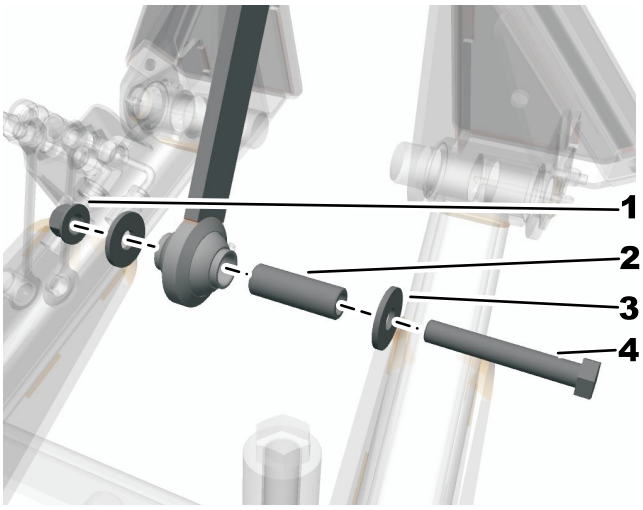

Figure 7

1. Lock nut (1/2 inch)
2. Spacer
3. Support washer
4. Screw (1/2 x 3–1/4 inch)

4

Installing the Hydraulic Tube Assemblies

Parts needed for this procedure:

1	Tube clamp
1	Plate
1	Tube clamp
1	Plate
2	Carriage screw
2	Flange nut

Procedure

1. Place a drain pan under the caps on the hydraulic tubes (Figure 8).
2. Remove the caps from the hydraulic tubes on the machine (Figure 8). Remove the caps one at a time as installing the tubes to prevent excess hydraulic fluid loss.

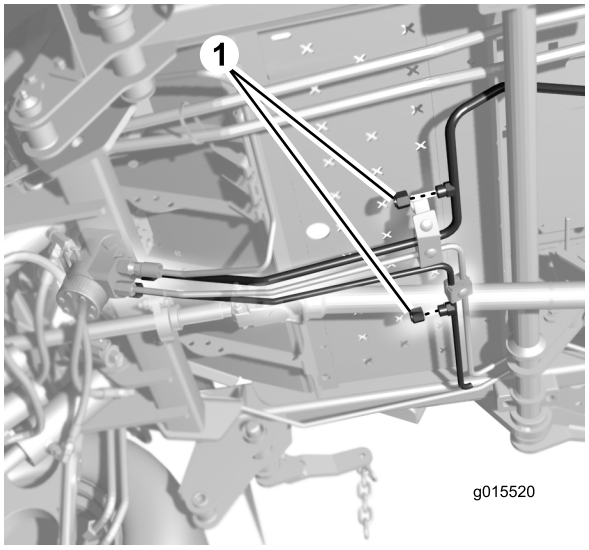

Figure 8

1. Hydraulic tube caps

3. Connect the rear end of the shorter hydraulic tube to the tube on the machine (Figure 9).

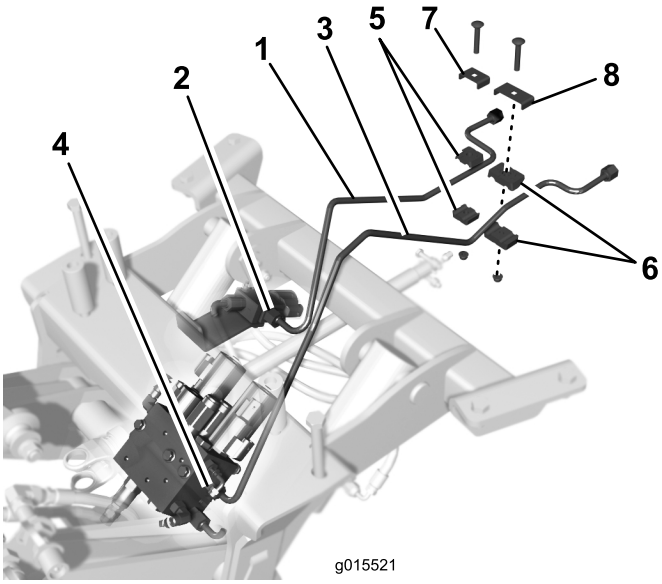

Figure 9

1. Shorter hydraulic tube
2. Valve
3. Longer hydraulic tube
4. Manifold
5. Tube clamp, small
6. Tube clamp, large
7. Plate, small
8. Plate, large

4. Connect the rear end of the longer hydraulic tube to the tube on the machine (Figure 9).
5. Tighten connections.
6. Loosely secure the shorter hydraulic tube to the adjacent tube, on the machine, with the smaller tube clamp, plate, carriage screw and flange nut, as shown in Figure 9.
7. Loosely secure the longer hydraulic tube to the adjacent tube, on the machine, with the larger tube clamp, plate, carriage screw and flange nut, as shown in Figure 9.
8. Tighten the carriage screws and nuts.

5

Mounting the Drive Shaft

No Parts Required

Procedure

1. While aligning the drive shaft mounting holes with the jack shaft hole, slide the drive shaft onto the attachment jack shaft (Figure 10).

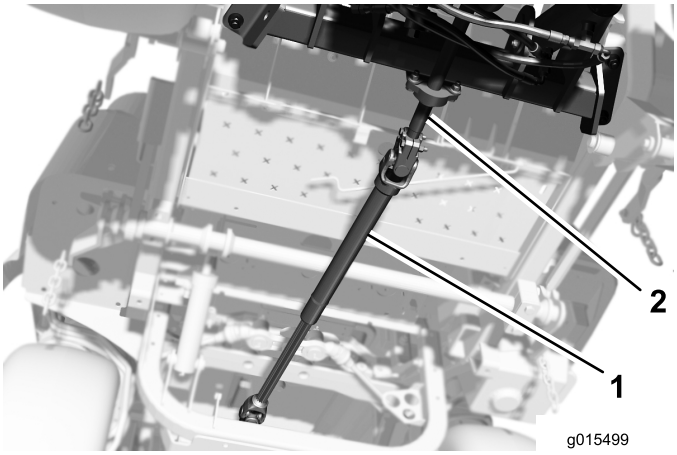

Figure 10

1. Drive shaft
2. Jack shaft

2. Secure the drive shaft to the jack shaft with the roll pin previously removed.
3. Tighten the 2 drive shaft cap screws and lock nuts.

6

Installing the Switches

Parts needed for this procedure:

2	Switch
1	Decal

Procedure

1. Use a knife to cut out the provided decal.
2. Remove the knock-out by pressing on it from inside the console.
3. Install the decal between the switch holes.

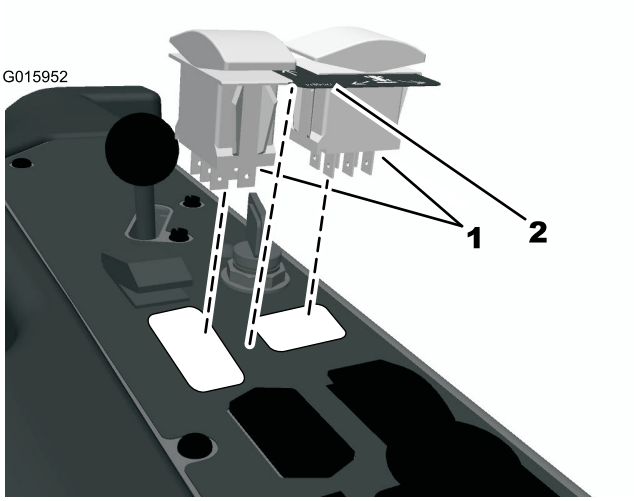

Figure 11

1. Switches.
2. Decal

4. Install the switches by pressing them into the hole.
5. Connect the wire harness to the switches.

7

Testing the Quick Attach Front Frame

No Parts Required

Procedure

Test the machine to ensure that all controls and parts are working as expected.

1. Start the engine.
2. Raise and lower the quick attach front frame to ensure that all functions are working as expected.
3. Stop the engine, engage the parking brake and remove the key from the ignition switch.
4. Check for any leaks.

   Note: If there are any leaks or if the machine is not performing properly, please review and repeat the steps in this manual to ensure that everything is connected properly.

Operation

Note: Determine the left and right sides of the machine from the normal operating position.

Think Safety First

Please read all safety instructions and symbols in the safety section. Knowing this information could help you or bystanders avoid injury.

⚠ DANGER

Operating on wet grass, ice or slippery steep slopes can cause sliding and loss of control.

Wheels dropping over edges can cause roll overs, which may result in serious injury, death or drowning.

Read and follow the rollover protection instructions and warnings.

To avoid loss of control and possibility of rollover:

- **Do not operate near drop-offs or near water.**
- **Reduce speed and use extreme caution on slopes.**
- **Avoid sudden turns or rapid speed changes. Always use seat belts**

⚠ CAUTION

This machine produces sound levels in excess of 85 dBA at the operators ear and can cause hearing loss through extended periods of exposure.

Wear hearing protection when operating this machine.

The use of protective equipment for eyes, ears, feet and head is recommended.

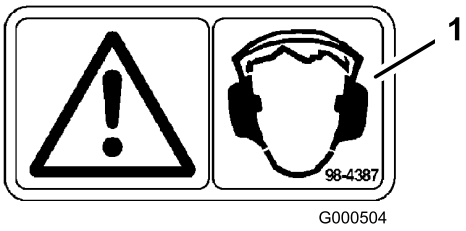

Figure 12

1. Warning— wear hearing protection

Operating Front Attachment

To operate the front attachment, use the rocker switches as indicated in Figure 13.

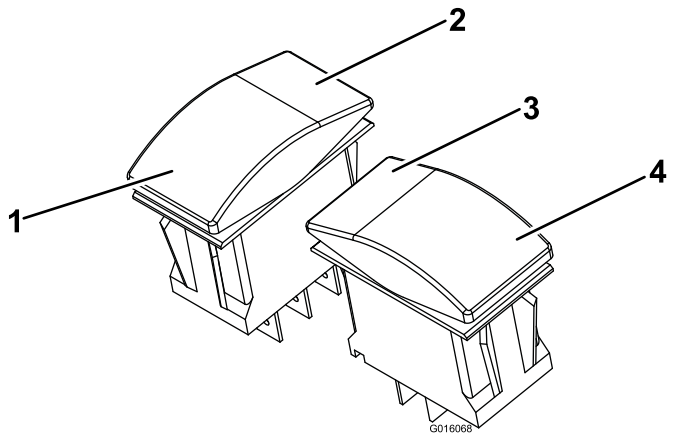

Figure 13

1. Tap to float front attach down. Hold to power down.
2. Front attach raise and hold
3. Swing front attachment right
4. Swing front attachment left

⚠ WARNING

Holding down the power down or front attachment lower switch can cause significant hydraulic system damage and result in front attachment damage.

To use front attachments:

Remove the mower deck as shown in (page), then mount the drive shaft as shown in (page).

⚠ WARNING

The drive shaft cannot be mounted to the front attachment with the deck installed, or else the machine will be damaged.

⚠ WARNING

It is not recommended to utilize non-powered front attachments with the deck installed. Doing this could result in damage to the machine, the operator, or onlookers.

To use the mower:

1. Clean and grease all front attachments.
2. Remove the drive shaft.
3. Install the front deck.

Attachments

Read the *Operator's Manual* supplied with the attachment before operating.

Make sure hydraulic quick couplers are free of any contaminates before connecting.

Keep output shaft oiled to prevent rust.

Never operate the PTO with attachment in the raised position. Noise from the PTO drive line will be evident.

Install the attachment as follows:

- Remove any attachment from the machine. Follow attachment supplier's recommendation for safe blocking and storage.
- Drive the machine into position behind the attachment adapter. Raise the machine adapter into the attachment adapter.
- Secure the adapters together with the attachment pin and hairpin cotter as shown in Figure 14. For more abusive loading a nut and bolt may be substituted.

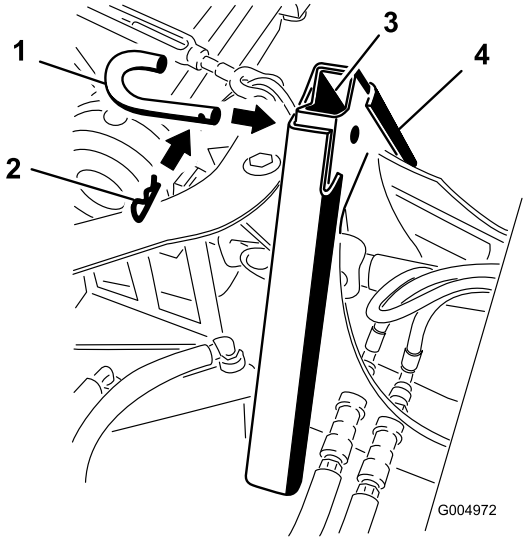

Figure 14

1. Attachment pin
2. Cotter pin

Front Attach to Mower Deck Conversion

Removing the deck

1. On a flat level surface raise deck to highest position.
2. Place 2 furniture dollies under each end of the deck and lower it so it rests on the dollies.
3. Remove the bolts (5/16 inch) and remove the pins from the drag-links on each side of the deck.
4. Remove the four retainer clips and clevis pins from the chains suspending the deck.
5. Remove the roll pin and loosen the bolts securing the drive shaft to the deck.
6. Slide the drive shaft off of the deck gearbox and secure it to the frame of the machine with a bungie cord or strap.
7. The deck can now be rolled out from under the machine.
8. If preparing the machine for winter work, it would be advisable to remove the deck hanging chains.

Attaching the deck

1. If the deck chains were removed from the lift arms, reinstall them.
2. Raise the drag-links on the deck with a pry bar and place a block (6 x 2 x 4 inch) under each one to lift the arm up. **Use caution, as there will be energy stored in the torsion spring.**
3. Raise the front of the machine so there is enough clearance to slide the deck underneath, and line up slots with the drag-link.
4. Slowly lower the machine over the drag links until the holes line up in the frame. Insert the pins and secure it with bolts (5/16 inch).
5. Raise the machine slightly until the block can be easily removed from underneath the drag-links.
6. Lower the machine until the chains can be attached with clevis pins and retainer clips. The machine my need to be started and the lift arms lowered to the lowest position so the chains will reach the deck.
7. After the deck is attached, slide the drive shaft over the gear box spline until the holes are aligned. Insert the roll-pins and tighten the two bolts on the drive shaft.
8. Start the machine and raise the deck high enough to remove the furniture dollies.
9. To adjust and verify the height of cut, consult the *Owner's Manual*.

Maintenance

Recommended Maintenance Schedule(s)

Maintenance Service Interval	Maintenance Procedure
After the first 10 hours	• Torque the frame mounting bolts. • Torque wheel lug nuts.
Every 50 hours	• Lubricate grease fittings
Every 200 hours	• Torque wheel lug nuts.

⚠ CAUTION

If you leave the key in the ignition switch, someone could accidently start the engine and seriously injure you or other bystanders.

Remove the key from the ignition before you do any maintenance.

Greasing and Lubrication

Lubricate the machine every 50 hours. Grease more frequently when operating conditions are extremely dusty or sandy.

Grease Type: General-purpose grease.

How to Grease

Service Interval: Every 50 hours

1. Disengage the PTO and set the parking brake.
2. Stop the engine, remove the key, and wait for all moving parts to stop before leaving the operating position.
3. Clean the grease fittings with a rag. Make sure to scrape any paint off the front of the fitting(s).
4. Connect a grease gun to the fitting. Pump grease into the fittings until grease begins to ooze out of the bearings.
5. Wipe up any excess grease.

Where to Add Grease

Grease the locations indicated in Figure 15.

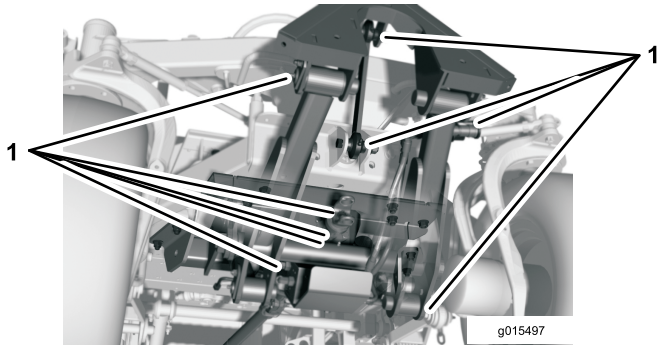

Figure 15

1. Grease locations

Grease the PTO shaft (Figure 16).

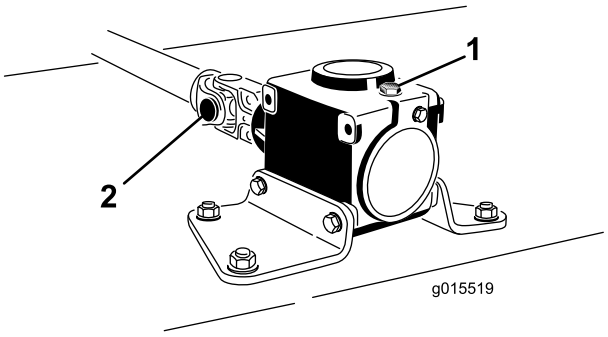

Figure 16

1. Gearbox
2. PTO drive shaft end yoke

Electrical System Maintenance

Important: Whenever working with the electrical system, always disconnect the battery cables, negative (-) cable first, to prevent possible wiring damage from short-outs.

Checking the Fuses

Refer to the *Operator's Manual* supplied with the cab for instructions on fuses.

If the machine has any electrical system issues, check the fuses. Grasp each fuse and remove them one at a time, checking to see if any are blown. If you need to replace a fuse, always use the **same type and amperage rated fuse** as the one you are replacing, **otherwise you could damage the electrical system**.

Note: If a fuse blows frequently, you probably have a short in the electrical system and should have it serviced by a qualified service technician.

Storage

Machine

1. Thoroughly clean the machine and cab, paying special attention to these areas:
   - PTO shaft assembly
   - All grease fittings and pivot points
   - Oil the spline on the PTO output shaft to prevent rusting
2. Check all fasteners for looseness and tighten them as necessary. Especially torque the 5 bolts securing the winter frame to the traction unit to 359 Nm (265 ft-lb).
3. Grease or oil all grease fittings and pivot points. Wipe off any excess lubricant.
4. Lightly sand and use touch up paint on painted areas that are scratched, chipped or rusted. Repair any dents in the metal body.

Notes:

Notes:

Declaration of Incorporation

Model No.	Serial No.	Product Description	Invoice Description	General Description	Directive
30509	315000001 and Up	Quick Attach Front Frame, Groundsmaster 360 Multi-Purpose Machine	FRONT FRAME, QAS-4WD GM360	Quick Attach Front Frame	2006/42/EC, 2000/14/EC

Relevant technical documentation has been compiled as required per Part B of Annex VII of 2006/42/EC.

We will undertake to transmit, in response to requests by national authorities, relevant information on this partly completed machinery. The method of transmission shall be electronic transmittal.

This machinery shall not be put into service until incorporated into approved Toro models as indicated on the associated Declaration of Conformity and in accordance with all instructions, whereby it can be declared in conformity with all relevant Directives.

Certified:



David Klis
Sr. Engineering Manager
8111 Lyndale Ave. South
Bloomington, MN 55420, USA
September 29, 2014

EU Technical Contact:

Peter Tetteroo
Toro Europe NV
B-2260 Oevel-Westerloo
Belgium

Tel. 0032 14 562960
Fax 0032 14 581911

International Distributor List

Distributor:	Country:	Phone Number:	Distributor:	Country:	Phone Number:
Agrolanc Kft	Hungary	36 27 539 640	Maquiver S.A.	Colombia	57 1 236 4079
Balama Prima Engineering Equip.	Hong Kong	852 2155 2163	Maruyama Mfg. Co. Inc.	Japan	81 3 3252 2285
B-Ray Corporation	Korea	82 32 551 2076	Mountfield a.s.	Czech Republic	420 255 704 220
Casco Sales Company	Puerto Rico	787 788 8383	Mountfield a.s.	Slovakia	420 255 704 220
Ceres S.A.	Costa Rica	506 239 1138	Munditol S.A.	Argentina	54 11 4 821 9999
CSSC Turf Equipment (pvt) Ltd.	Sri Lanka	94 11 2746100	Norma Garden	Russia	7 495 411 61 20
Cyril Johnston & Co.	Northern Ireland	44 2890 813 121	Oslinger Turf Equipment SA	Ecuador	593 4 239 6970
Cyril Johnston & Co.	Republic of Ireland	44 2890 813 121	Oy Hako Ground and Garden Ab	Finland	358 987 00733
Equiver	Mexico	52 55 539 95444	Parkland Products Ltd.	New Zealand	64 3 34 93760
Femco S.A.	Guatemala	502 442 3277	Perfetto	Poland	48 61 8 208 416
ForGarder OU	Estonia	372 384 6060	Pratoverde SRL.	Italy	39 049 9128 128
G.Y.K. Company Ltd.	Japan	81 726 325 861	Prochaska & Cie	Austria	43 1 278 5100
Geomechaniki of Athens	Greece	30 10 935 0054	RT Cohen 2004 Ltd.	Israel	972 986 17979
Golf international Turizm	Turkey	90 216 336 5993	Riversa	Spain	34 9 52 83 7500
Guandong Golden Star	China	86 20 876 51338	Lely Turfcare	Denmark	45 66 109 200
Hako Ground and Garden	Sweden	46 35 10 0000	Solvert S.A.S.	France	33 1 30 81 77 00
Hako Ground and Garden	Norway	47 22 90 7760	Spypros Stavrinides Limited	Cyprus	357 22 434131
Hayter Limited (U.K.)	United Kingdom	44 1279 723 444	Surge Systems India Limited	India	91 1 292299901
Hydroturf Int. Co Dubai	United Arab Emirates	97 14 347 9479	T-Markt Logistics Ltd.	Hungary	36 26 525 500
Hydroturf Egypt LLC	Egypt	202 519 4308	Toro Australia	Australia	61 3 9580 7355
Irrimac	Portugal	351 21 238 8260	Toro Europe NV	Belgium	32 14 562 960
Irrigation Products Int'l Pvt Ltd.	India	0091 44 2449 4387	Valtech	Morocco	212 5 3766 3636
Jean Heybroek b.v.	Netherlands	31 30 639 4611	Victus Emak	Poland	48 61 823 8369

European Privacy Notice

The Information Toro Collects
Toro Warranty Company (Toro) respects your privacy. In order to process your warranty claim and contact you in the event of a product recall, we ask you to share certain personal information with us, either directly or through your local Toro company or dealer.

The Toro warranty system is hosted on servers located within the United States where privacy law may not provide the same protection as applies in your country.

BY SHARING YOUR PERSONAL INFORMATION WITH US, YOU ARE CONSENTING TO THE PROCESSING OF YOUR PERSONAL INFORMATION AS DESCRIBED IN THIS PRIVACY NOTICE.

The Way Toro Uses Information
Toro may use your personal information to process warranty claims, to contact you in the event of a product recall and for any other purpose which we tell you about. Toro may share your information with Toro's affiliates, dealers or other business partners in connection with any of these activities. We will not sell your personal information to any other company. We reserve the right to disclose personal information in order to comply with applicable laws and with requests by the appropriate authorities, to operate our systems properly or for our own protection or that of other users.

Retention of your Personal Information
We will keep your personal information as long as we need it for the purposes for which it was originally collected or for other legitimate purposes (such as regulatory compliance), or as required by applicable law.

Toro's Commitment to Security of Your Personal Information
We take reasonable precautions in order to protect the security of your personal information. We also take steps to maintain the accuracy and current status of personal information.

Access and Correction of your Personal Information
If you would like to review or correct your personal information, please contact us by email at legal@toro.com.

Australian Consumer Law

Australian customers will find details relating to the Australian Consumer Law either inside the box or at your local Toro Dealer.

Toro General Commercial Product Warranty

A Two-Year Limited Warranty

Conditions and Products Covered

The Toro Company and its affiliate, Toro Warranty Company, pursuant to an agreement between them, jointly warrant your Toro Commercial product ("Product") to be free from defects in materials or workmanship for two years or 1500 operational hours*, whichever occurs first. This warranty is applicable to all products with the exception of Aerators (refer to separate warranty statements for these products). Where a warrantable condition exists, we will repair the Product at no cost to you including diagnostics, labor, parts, and transportation. This warranty begins on the date the Product is delivered to the original retail purchaser.
* Product equipped with an hour meter.

Instructions for Obtaining Warranty Service

You are responsible for notifying the Commercial Products Distributor or Authorized Commercial Products Dealer from whom you purchased the Product as soon as you believe a warrantable condition exists. If you need help locating a Commercial Products Distributor or Authorized Dealer, or if you have questions regarding your warranty rights or responsibilities, you may contact us at:

Toro Commercial Products Service Department
Toro Warranty Company
8111 Lyndale Avenue South
Bloomington, MN 55420-1196

952–888–8801 or 800–952–2740
E-mail: commercial.warranty@toro.com

Owner Responsibilities

As the Product owner, you are responsible for required maintenance and adjustments stated in your *Operator's Manual*. Failure to perform required maintenance and adjustments can be grounds for disallowing a warranty claim.

Items and Conditions Not Covered

Not all product failures or malfunctions that occur during the warranty period are defects in materials or workmanship. This warranty does not cover the following:

- Product failures which result from the use of non-Toro replacement parts, or from installation and use of add-on, or modified non-Toro branded accessories and products. A separate warranty may be provided by the manufacturer of these items.
- Product failures which result from failure to perform recommended maintenance and/or adjustments. Failure to properly maintain your Toro product per the Recommended Maintenance listed in the *Operator's Manual* can result in claims for warranty being denied.
- Product failures which result from operating the Product in an abusive, negligent, or reckless manner.
- Parts subject to consumption through use unless found to be defective. Examples of parts which are consumed, or used up, during normal Product operation include, but are not limited to, brake pads and linings, clutch linings, blades, reels, rollers and bearings (sealed or greasable), bed knives, spark plugs, castor wheels and bearings, tires, filters, belts, and certain sprayer components such as diaphragms, nozzles, and check valves, etc.
- Failures caused by outside influence. Conditions considered to be outside influence include, but are not limited to, weather, storage practices, contamination, use of unapproved fuels, coolants, lubricants, additives, fertilizers, water, or chemicals, etc.
- Failure or performance issues due to the use of fuels (e.g. gasoline, diesel, or biodiesel) that do not conform to their respective industry standards.
- Normal noise, vibration, wear and tear, and deterioration.
- Normal "wear and tear" includes, but is not limited to, damage to seats due to wear or abrasion, worn painted surfaces, scratched decals or windows, etc.

Parts

Parts scheduled for replacement as required maintenance are warranted for the period of time up to the scheduled replacement time for that part. Parts replaced under this warranty are covered for the duration of the original product warranty and become the property of Toro. Toro will make the final decision whether to repair any existing part or assembly or replace it. Toro may use remanufactured parts for warranty repairs.

Deep Cycle and Lithium-Ion Battery Warranty:

Deep cycle and Lithium-Ion batteries have a specified total number of kilowatt-hours they can deliver during their lifetime. Operating, recharging, and maintenance techniques can extend or reduce total battery life. As the batteries in this product are consumed, the amount of useful work between charging intervals will slowly decrease until the battery is completely worn out. Replacement of worn out batteries, due to normal consumption, is the responsibility of the product owner. Battery replacement may be required during the normal product warranty period at owner's expense. Note: (Lithium-Ion battery only): A Lithium-Ion battery has a part only prorated warranty beginning year 3 through year 5 based on the time in service and kilowatt hours used. Refer to the *Operator's Manual* for additional information.

Maintenance is at Owner's Expense

Engine tune-up, lubrication, cleaning and polishing, replacement of filters, coolant, and completing recommended maintenance are some of the normal services Toro products require that are at the owner's expense.

General Conditions

Repair by an Authorized Toro Distributor or Dealer is your sole remedy under this warranty.

Neither The Toro Company nor Toro Warranty Company is liable for indirect, incidental or consequential damages in connection with the use of the Toro Products covered by this warranty, including any cost or expense of providing substitute equipment or service during reasonable periods of malfunction or non-use pending completion of repairs under this warranty. Except for the Emissions warranty referenced below, if applicable, there is no other express warranty. All implied warranties of merchantability and fitness for use are limited to the duration of this express warranty.

Some states do not allow exclusions of incidental or consequential damages, or limitations on how long an implied warranty lasts, so the above exclusions and limitations may not apply to you. This warranty gives you specific legal rights, and you may also have other rights which vary from state to state.

Note regarding engine warranty:

The Emissions Control System on your Product may be covered by a separate warranty meeting requirements established by the U.S. Environmental Protection Agency (EPA) and/or the California Air Resources Board (CARB). The hour limitations set forth above do not apply to the Emissions Control System Warranty. Refer to the Engine Emission Control Warranty Statement supplied with your product or contained in the engine manufacturer's documentation for details

Countries Other than the United States or Canada

Customers who have purchased Toro products exported from the United States or Canada should contact their Toro Distributor (Dealer) to obtain guarantee policies for your country, province, or state. If for any reason you are dissatisfied with your Distributor's service or have difficulty obtaining guarantee information, contact the Toro importer.

374-0253 Rev C