FORM NO. 3316-422

TORO®

DEALER PRE-DELIVERY CHECK LIST

PROLINE

38", 42" and 52" 600-Series Mowers

PROPER MOWER LEVEL ADJUSTMENT IS CRITICAL FOR GOOD QUALITY OF CUT. ANTI-SCALP ROLLERS ARE NOT TO TOUCH GROUND EXCEPT ON UNEVEN TERRAIN. LEVEL ADJUSTMENT MUST ALSO BE MADE ON FACTORY INSTALLED MOWERS.

☐ **ADJUST TIRE PRESSURE**

Using a low pressure tire gauge, adjust tire pressure in all four tires:

	Front	Rear
PSI	8	8
kg/cm	.56	.56

☐ **LEVEL MOWER**

Position tractor on a level surface.

Adjust left and right hanger rod nuts from frame to bottom of trunnions, 42" side Discharge - 3 1/4" all others - 2 3/4" (Fig. 1). Place front wheel in forward operating position and place mower height control in 4th notch from top.

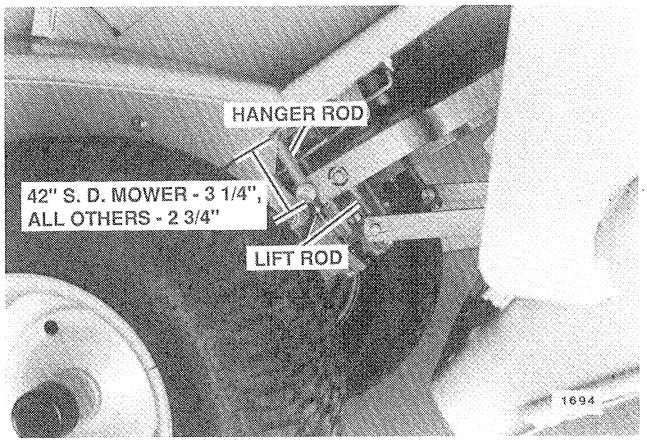

FIG. 1 Adjust Rod Lengths

Adjust side-to-side mower level:

1. Turn each outside mower blade side-to-side.
2. Measure outside end of each side blade tip and adjust either right or left lift rod adjustment nut to obtain equal distances from surface to blade tips (Fig. 2 & 3).

Adjust front-to-back mower level:

1. Turn center mower blade front-to-back.
2. Measure center blade tips and adjust hanger rods evenly so that distance from surface to front and rear of blade tips are equal to 1/8 inch low in front (Figs. 2 & 3). Tighten nut to lower front or loosen nut to raise front.

☐ **CHECK SPINDLE LUBRICATION**

If applicable, fill spindles with #2 multi-purpose lithium grease applied with a pressure grease gun.

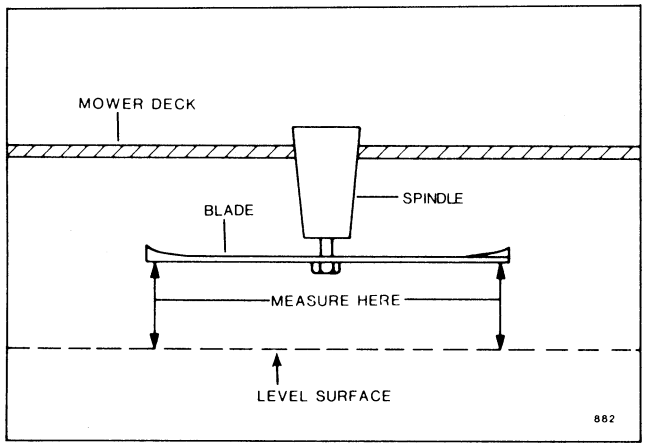

FIG. 2 Mower Level Measurement

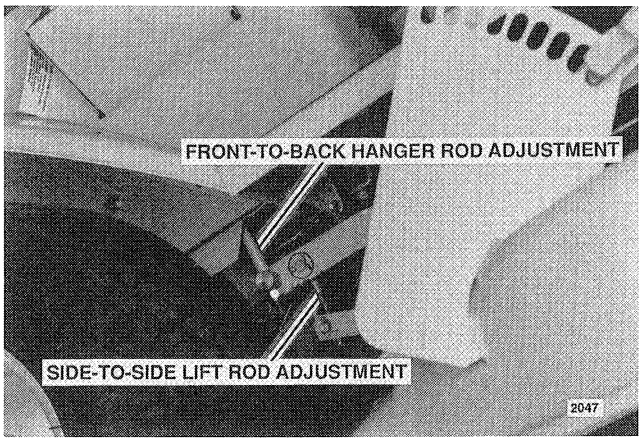

FIG. 3 Level Adjusting Rods

☐ **ATTACH OPERATOR'S MANUAL TO UNIT**

Sign this form below and insert it in front of Operator's

© The TORO Company - 1993

manual. Attach Operator's Manual and warranty statement to unit.

Sign this form below and insert it in front of operator's manual. Attach Operator's Manual and warranty statements to tractor.

I CERTIFY THAT THIS MOWER IS SERVICED AND PREPARED FOR CUSTOMER OPERATION.

_____

Authorized TORO Dealer Signature

NOTE: Preceding items covering pre-delivery service and inspection should have been completed by a TORO Dealer. Failure to perform this work on your new mower prior to its first use may affect warranty.

PRINTER PROJECT NO. 8561

PRINTED IN U.S.A.