FORM NO. 3316–476

TORO®

MODEL NO. 30137 – 490001 & UP

OPERATOR'S MANUAL

37" RECYCLER® CUTTING DECK

ProLine Mid–Sized Mowers

TORO®
THIS UNIT CONFORMS TO ANSI/OPEI B71.4–1990

To assure maximum safety, optimum performance, and to gain knowledge of the product, it is essential that you or any other operator of the machine read and understand the contents of this manual before the engine is ever started. Pay particular attention to the SAFETY INSTRUCTIONS highlighted by this symbol —

The safety alert symbol means CAUTION, WARNING or DANGER — personal safety instruction. Failure to comply with the instruction may result in personal injury.



©The TORO Company – 1993

FOREWORD

This cutting deck has advanced concepts in engineering, design and safety; and if maintained properly, will give excellent service.

Since this is a high-quality product, Toro is concerned about the future use of the machine and safety of the user. Therefore, read this manual to familiarize yourself with proper set-up, operation and maintenance instructions. The major sections of the manual are:

1. Safety Instructions
2. Set-up Instructions
3. Operating Instructions
4. Maintenance

Certain information in this manual is emphasized. **DANGER, WARNING** and **CAUTION** identify personal safety related information. **IMPORTANT** identifies mechanical information demanding special attention. Be sure to read this directive because it deals with the possibility of damaging a part or parts of the machine. NOTE identifies general information worthy of special attention.

TABLE OF CONTENTS

	Page
SAFETY INSTRUCTIONS	3-4
SAFETY AND INSTRUCTION DECALS	5
SPECIFICATIONS	6
LOOSE PARTS	6
SET–UP INSTRUCTIONS	7-8
Install Castor Wheels	7
Mount Carrier Frame to Traction Unit	7
Mount Cutting Deck	8
Install Drive Belt	8
OPERATING INSTRUCTIONS	9-10
Adjust Height-Of-Cut	9
Side Discharge	9
LUBRICATION	10
Grease Bearings and Bushings	10
MAINTENANCE	11-15
Troubleshooting	11
Replace Castor Arm Bushings	12
Service Castor Wheel and Bearing	12
Check for Bent Blade	13
Replace Cutter Blade	13
Check Blade Sail and Sharpening	13
Correcting Cutting Unit Mismatch	14
Replace Deck Belt	15
IDENTIFICATION AND ORDERING	15
WARRANTY	Back Cover

SAFETY INSTRUCTIONS

The safety alert symbol means CAUTION, WARNING or DANGER - "personal safety instruction". Read and under stand the instruction because it has to do with safety. Failure to comply with the instruction may result in personal injury.

Improper use or maintenance of the machine can result in injury or death, to reduce the potential for injury or death, comply with the following safety instructions.

BEFORE OPERATING

1. Read and understand the contents of this Operator's Manual before operating the machine. Become familiar with all controls and know how to stop quickly. A replacement manual is available by sending complete Model and Serial Number to:

The Toro Company
8111 Lyndale Avenue South
Bloomington, Minnesota 55420-1196

2. Never allow children to operate the machine. Do not allow adults to operate machine without proper instruction. Only trained operators who have read this manual should operate this machine.

3. Never operate the machine when under the influence of drugs or alcohol.

4. Remove all debris or other objects that might be picked up and thrown by the cutter blades. Keep all bystanders away from the mowing area.

5. Do not operate machine unless all shields, guards, covers and safety devices in place. If a shield, guard, safety device or decal is illegible or damaged, repair or replace it before operating machine.

6. Do not operate machine while wearing sandals, tennis shoes, sneakers or shorts. Also, do not wear loose fitting clothing which could get caught in moving parts. Always wear long pants and substantial shoes. Wearing safety glasses, safety shoes and a helmet is advisable and required by some local ordinances and insurance regulations.

7. Start engine only when parking brake is set, PTO (blade) is disengaged and transmission is in neutral.

WHILE OPERATING

8. Do not run the engine in a confined area without adequate ventilation. Exhaust fumes are hazardous and could possibly be deadly.

9. Using the machine demands attention, and to prevent loss of control:

A. Mow only in daylight or when there is good artificial light.

B. Watch for holes or other hidden hazards.

C. Do not drive close to a sand trap, ditch, creek or other hazard.

D. Reduce speed when making sharp turns.

E. Avoid sudden starts and stops.

F. Cut slopes carefully. Do not start, stop, or turn suddenly on hillsides.

G. Before backing up, look to the rear and assure no one is behind the machine.

H. Watch out for traffic when near or crossing roads. Always yield the right-of -way.

10. Do not operate unless grass deflector, Recycler® cover or entire grass collector is installed. The grass deflector must always be installed and in lowest position on the side discharge cutting unit. This product is designed to drive objects into the ground where they lose energy quickly in grassy areas. **However, don't take an injury risk!!** When a person or pet appears unexpectedly in or near the mowing area, **STOP MOWING.** Careless operation, combined with terrain angles, ricochets, or improperly positioned guards, can lead to thrown object injuries. Do not resume mowing until area is cleared.

11. Never raise the cutting unit or change height-of-cut while the blade(s) are rotating.

12. If the cutting blade(s) strike a solid object or the machine vibrates abnormally, shut the engine off. Remove spark plug wire(s) to prevent accidental starting. Check cutting unit and traction unit for damage and malfunctioning parts. Repair any damage before restarting the engine and operating the cutting unit. Be sure blade(s) are in good condition and blade bolts are tightened to specification.

13. Do not touch engine or muffler while engine is running or soon after it is stopped. These areas could be hot enough to cause a burn.

MAINTENANCE

14. Remove key from ignition switch and disconnect spark plug wire(s) to prevent accidental starting of the engine when servicing, adjusting or storing the machine.

15. Perform only those maintenance instructions described in this manual. If major repairs are ever needed or assistance is desired, contact an Authorized TORO Distributor.

SAFETY INSTRUCTIONS

16. To reduce potential fire hazard, keep the engine free of excessive grease, grass, leaves and accumulations of dirt.

17. Be sure machine is in safe operating condition by keeping nuts, bolts and screws tight. Check the blade mounting bolts and nuts frequently to be sure they are tightened to specification.

18. Make sure all hydraulic line connectors are tight, and all hydraulic hoses and lines are in good condition before applying pressure to the system.

19. Keep body and hands away from pin hole leaks in hydraulic lines that eject high pressure hydraulic fluid. Use cardboard or paper to find hydraulic leaks. Hydraulic fluid escaping under pressure can penetrate skin and cause injury. Fluid accidentally injected into the skin must be surgically removed within a few hours by a doctor familiar with this form of injury or gangrene may result.

20. Before disconnecting or performing any work on the hydraulic system, all pressure in system must be relieved by stopping engine and placing hydrostatic traction control in neutral.

21. If the engine must be running to perform a maintenance adjustment, keep hands, feet, clothing and other parts of the body away from the cutting unit blades and other moving parts.

22. Allow engine to cool before storing mower in any enclosure such as a garage or storage shed. Make sure the mower fuel tank is empty if machine is to be stored in excess of 30 days. Do not store mower near any open flame or where gasoline fumes may be ignited by a spark. Always store gasoline in a safety-approved, red metal container.

23. At the time of manufacture, the machine conformed to the safety standards in effect. To ensure optimum performance and continued safety conformance of the machine, use genuine TORO replacement parts and accessories. Replacement parts and accessories made by other manufacturers may result in non-conformance with safety standards and could void the warranty.

SAFETY AND INSTRUCTION DECALS

The following decals are installed on the machine. If any become damaged or illegible, replace it. The decal part number is listed below and in your parts catalog. Replacement can be ordered from your Authorized Toro Distributor.



ON LEFT SIDE OF CUTTING UNIT
(Part No. 43–8480)



ON DISCHARGE COVER
(Part No. 82–7490)



ON LEFT SIDE OF CUTTING UNIT
(Part No. 54–9220)



ON TOP OF CUTTING UNIT
(Part No. 66–1340)



ON TOP OF CUTTING UNIT
(Part No. 68–8340)

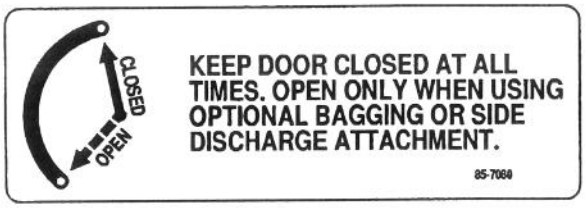

ON TOP OF CUTTING UNIT
(Part No. 85–7080)

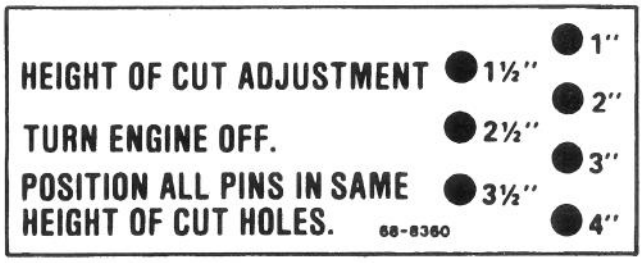

ON SIDES OF CARRIER FRAME
(Part No. 68–8360), Left Side
(Part No. 79–0940), Right Side



ABOVE DISCHARGE OPENING
(Part No. 68–3650)



UNDER BELT COVER
(Part No. 67–5360)

SPECIFICATIONS

Width of Cut: 37 in.

Height of Cut: Adjustable from 1–4 in. (25–102 mm) in 1/2 in. (13 mm) increments.

Cutter Blades: Two heat treated steel blades, each .1345 in. (10 gage) thick, and 15-1/2 in. (394 mm) long.

Castor Wheels: 8 x 3-1/2 inch with greaseable roller bearings. (Inflate to 10–15 psi)

Weight: 155 lb. (70.3 Kg)

Specifications and design subject to change without notice.

LOOSE PARTS

NOTE: Use this chart as a checklist to assure all parts have been received.

DESCRIPTION	QTY.	USE
Angle Bracket–Right	1	Mount Angle Brackets to Traction Unit
Angle Bracket–Left	1	
Flange Screws 1/2–13x1	6	
Flange Lock Nuts	6	
Carrier Frame	1	Mount Carrier Frame to Traction Unit
Capscrews 3/8–16x1-3/4	4	
Capscrews 3/8–16x7/8	4	
Lock Washers	4	
Lock Nuts	4	
Shims	2	
Castor Wheel Assembly	2	Mount Castor Wheels to Carrier Frame
Thrust Washer	8	
Retaining Ring	2	
Adjusting Shaft	2	Mount Adjusting Shafts
Jam Nuts	4	
Washer	2	
Spring	2	
Bushing	2	
Clevis Pin	4	Mount Cutting Unit to Carrier Frame
Hair Pin Cotter	4	
Discharge Chute Assembly	1	Use to Side Discharge
Operator"s Manual	1	Read Before Operating Cutting Unit and Ordering Parts
Parts Catalog	1	

SET–UP INSTRUCTIONS

INSTALL CASTOR WHEELS

1. Place two (2) thrust washers onto castor wheel shaft (Fig. 1).

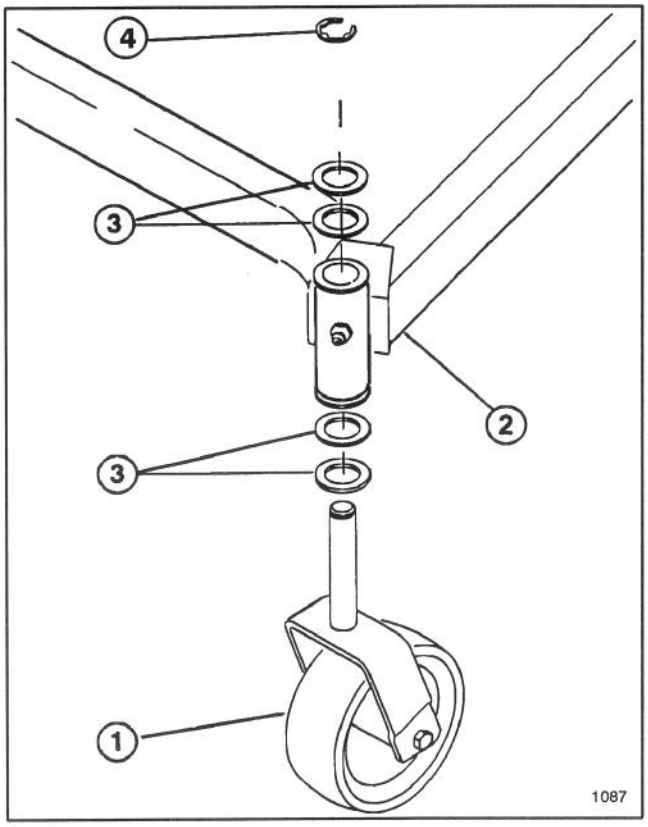

Figure 1

1	Castor wheel assembly	3	Thrust washer
2	Carrier frame	4	Retaining ring

2. Insert shaft into carrier frame mounting tube. Install two (2) more thrust washers and secure with retaining ring (Fig. 1).

MOUNT CARRIER FRAME TO TRACTION UNIT

1. Align carrier frame holes with mounting holes in traction unit frame. Secure each side with three (3) flange screws and lock nuts. Position bottom lock nut outside frame. Torque mounting screws to 60–80 ft. lbs. (81–109 Nm).

IMPORTANT: When mounting angle brackets to traction frame on hydrostatic drive units, use 1-1/4 in. flange screws supplied with traction unit.

2. Align carrier frame mounting holes with mounting holes in angle bracketts, while positioning shim between top of angel bracket and carrier frame and align mounting holes (Fig. 2).

3. Secure each side with capscrews and lock nuts. Lock nuts must be positioned outside carrier frame.

4. Secure top of each carrier frame and shim to anggle bracket with capscrews, lock washers and nuts. Torque fasteners to 240–320 in. lb.

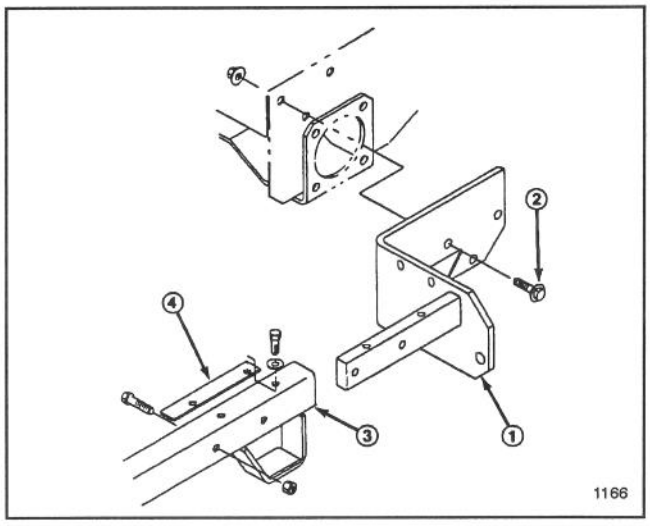

Figure 2

1	Angle bracket	3	Carrier frame
2	Flange screw and locknut	4	Shim

SET–UP INSTRUCTIONS

MOUNT CUTTING DECK

1. Position cutting deck under carrier frame.

2. Mount cutting unit to carrier frame with four (4) clevis pins and hair pin cotters (Fig. 5).

Note: All four pins must be in the same hole locations to prevent uneven cutting.

INSTALL DRIVE BELT

1. Route belt around deck drive pulley and engine clutch pulley (Fig. 3).Belt must be between belt guides.

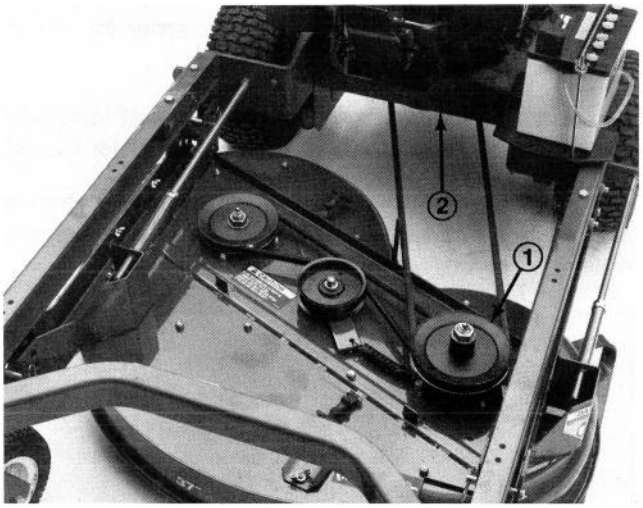

Figure 3

1 Drive pulley
2 Clutch pulley (not shown)

2. Thread two (2) jam nuts on each adjusting shaft approximately 9 in. (Fig. 4).

3. Slide a washer, spring and bushing onto each adjusting shaft. Install bushing with flange end against spring.

4. Insert spring end of adjusting shaft into hole in deck mounting bracket and other end into carrier frame mounting tab. Small end of bushing fits into hole in deck bracket (Fig. 4).

5. To tension belt, tighten front jam nut on each adjusting shaft until springs are compressed to 5 in. Measure between washer and bushing (Fig. 4). Secure rear jam nuts.

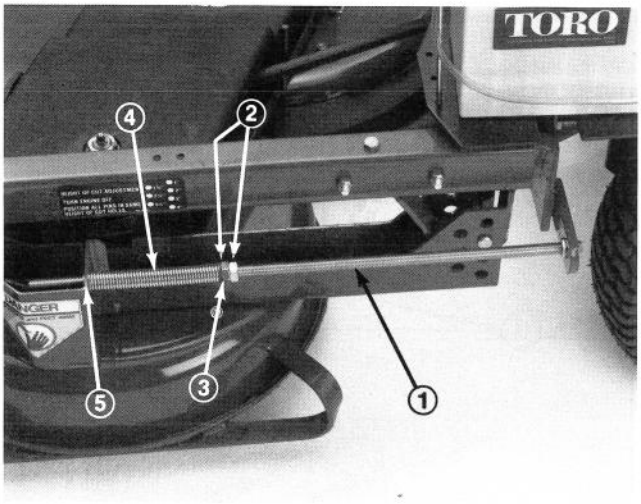

Figure 4

1 Adjusting shaft
2 Jam nuts
3 Washer
4 Spring
5 Bushing

6. Check position of belt guides. Guides should be positioned about 1/8 in. (3.175 mm) away from belt.

7. Install belt cover if removed.

OPERATING INSTRUCTIONS

ADJUST HEIGHT-OF-CUT

The height-of-cut is adjustable from 1–4 inches (25–102 mm) in 1/2 in. (13mm) increments by moving four clevis pins in different holes (Fig, 5).

Note: All four pins must be in the same hole location for even cutting.

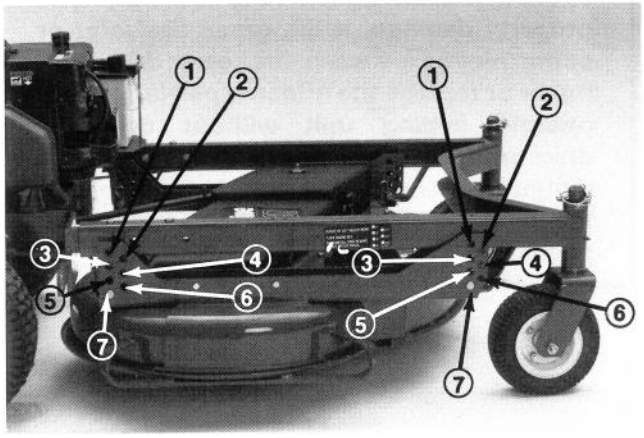

Figure 5

1 1 in. (25 mm)
2 1-1/2 in. (38mm)
3 2 in. (51mm)
4 2-1/2 in. (64 mm)
5 3 in. (76 mm)
6 3-1/2 in. (89 mm)
7 4 in. (102 mm)

Note: If cutting unit is to be used in the 1 or 1-1/2 in. height-of-cut ssetting, front rollers must be repositioned in the top bracket holes.

1. Remove cotter pin from roller shaft.

2. Slide shaft out of bracket holes, align roller with top holes and reinstall shaft.

Note: Make sure L–shaped pin is inserted into roller shaft and hole in roller bracket.

3. Install cotter pin to secure assembly.

SIDE DISCHARGE

1. Remove (2) capscrews, lock washers and wing nuts securing disccharge cover to deck channel. Remove cover (Fig. 6).

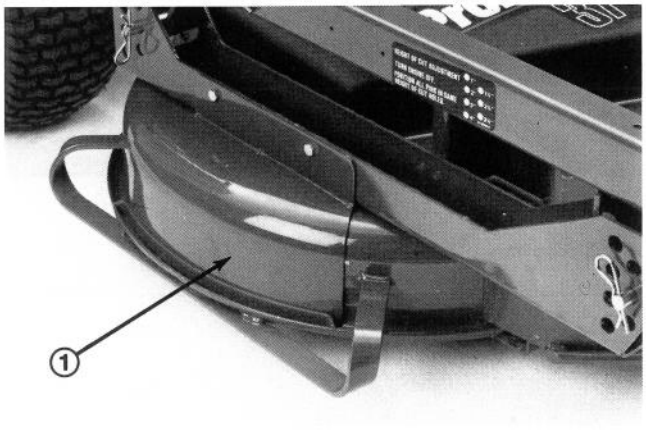

Figure 6

1 Discharge cover

---

2. Securing disccharge chute (Fig. 7) to deck with (2) capscrews, lock washers and wing nuts previously securing discharge cover to deck channel.

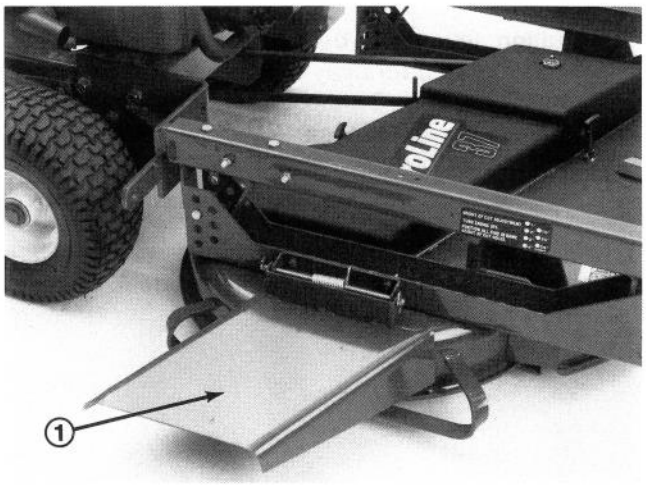

Figure 7

1 Discharge chute

---

3. Loosen wing nut securing slot cover to top of deck (Fig. 8). Lift cover bump out of slot, rotate cover 180°, pull cover outward to move deck door into the discharge position. Insert cover into slot and tighten wling nut.

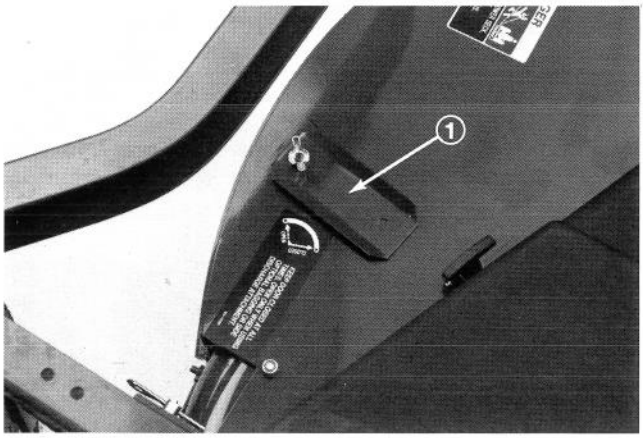

Figure 8

1 Slot cover

WARNING

The grass deflector (Fig. 6) is a safety device that diverts grass and other foreign objects discharged downward. Without deflector mounted in place on the cutting unit and spring loaded hinges holding deflector in the down position, the blades could hurl grass and foreign objects out the discharge opening with enough force to cause injury or property damage. If the grass deflector or spring hinges are worn, broken or damaged, repair or replace the affected part(s). Do not operate cutting unit without deflector, discharge cover or entire grass collector mounted on the cutting unit. Always be sure the deflector chute is in the lowest possible position.

LUBRICATION

GREASE BEARINGS AND BUSHINGS

The cutting unit must be lubricated regularly, after every 8 hours of operation or daily, whichever comes first. Grease with No. 2 general purpose lithium base or molybdenum base grease. All other bearings and bushings must be lubricated every 50 hours of operation.

1. Grease: castor spindle bushings, castor wheel bearings, blade spindle bearings and deck belt idler bushing (Fig. 9).



Figure 9

MAINTENANCE

TROUBLESHOOTING: UNIT WILL NOT CUT OR CUTS POORLY

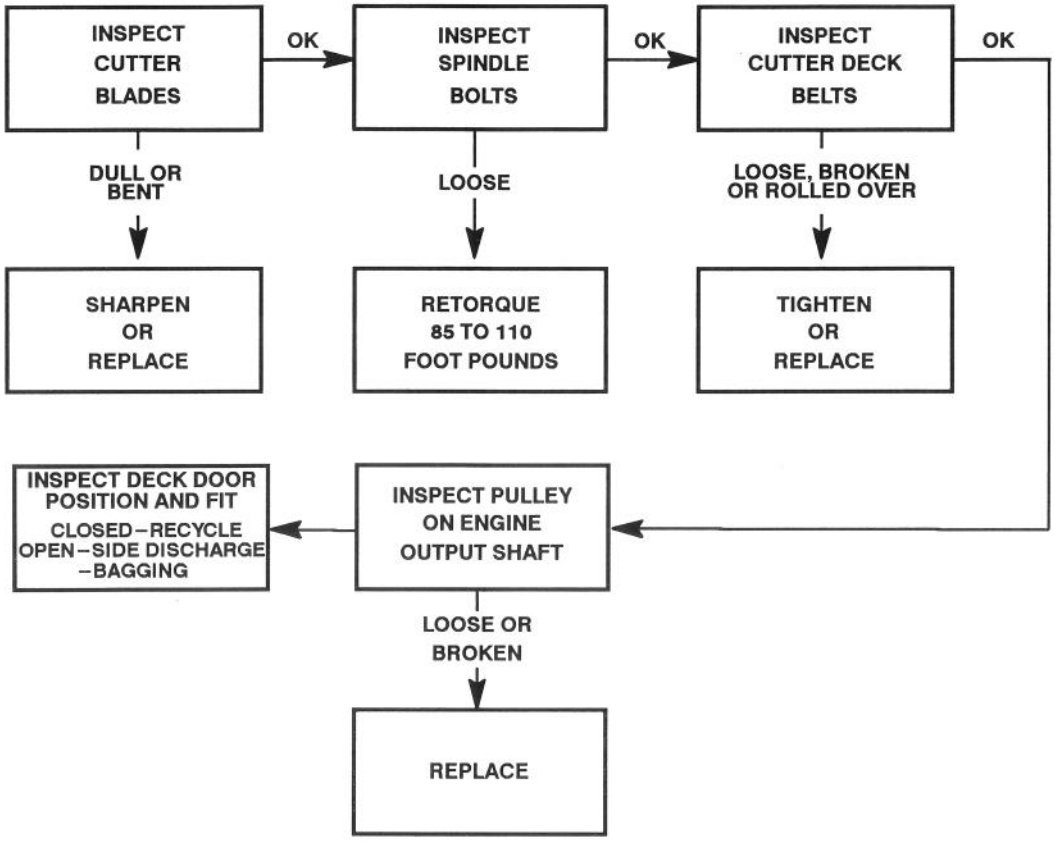

REPLACE CASTOR ARM BUSHINGS

Castor arms have bushings pressed into the top and bottom of the tube. To check bushings, move castor fork back and forth, and side-to-side. If castor spindle is loose, bushings are worn and must be replaced.

1. Raise cutting unit so castor wheels are off the floor and block up with jack stands.

2. Remove retaining ring, spacer and thrust washer(s) from top of castor spindle (Fig. 10). Pull castor spindle out of mounting tube. Leaving thrust washers on bottom of spindle.

3. Insert pin punch into mounting tube and drive out bushings (Fig. 10). Clean inside mounting tube.

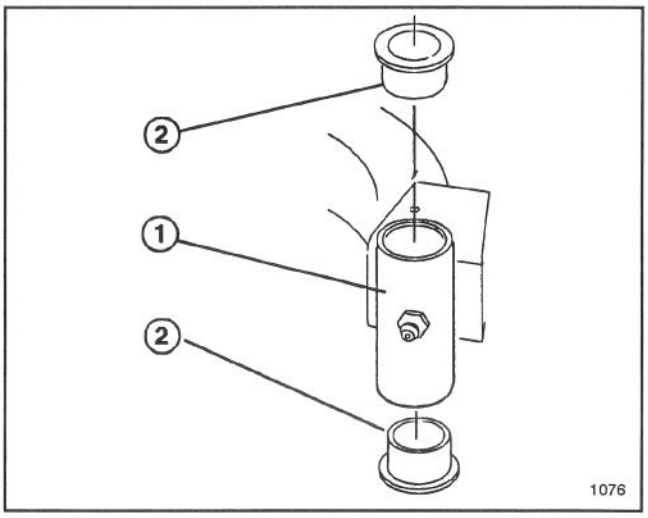

Figure 10

1 Mounting tube 2 Bushing

4. Apply grease inside and outside new bushings. Using a hammer and flat plate, drive bushings into mounting tube.

5. Inspect castor spindle for wear; replace if necessary.

6. Slide castor spindle through bushings and mounting tube. Place thrust washer(s) and spacer(s) onto spindle and secure with retaining ring.

IMPORTANT: When bushings are installed, the inside diameter may collapse slightly, this may not allow castor spindle to be installed. If castor spindle does not slide through new bushings, ream both bushings to inside diameter of 1.126 in. (28.6mm).

7. Grease castor arm bushings using No. 2 general purpose lithium base or molybdenum base grease.

SERVICE CASTOR WHEEL AND BEARING

Castor wheels rotates on a roller bearing supported by a spanner bushing. If the bearing is kept well lubricated, wear will be minimal. Failure to keep the bearing well lubricated will cause rapid wear. A wobbly castor wheel usually indicates a worn bearing.

1. Remove lock nut and wheel bolt holding castor wheel between castor fork (Fig. 11).

2. Remove bushing and pull spanner bushing and roller bearing out of wheel hub.

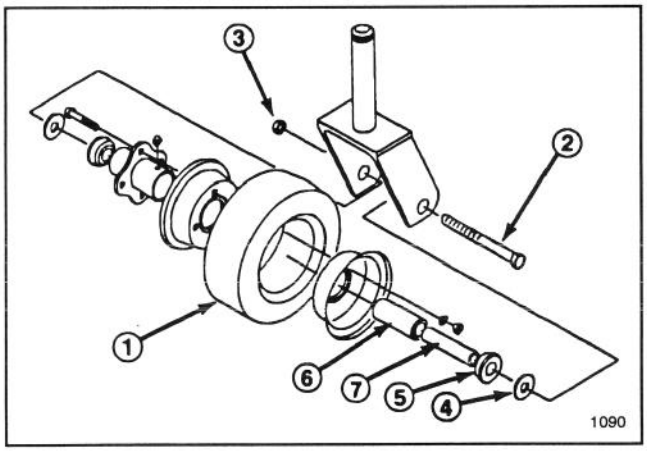

Figure 11

1 Wheel
2 Wheel bolt
3 Lock nut
4 Washer
5 Bushing
6 Roller bearing
7 Spanner bushing

3. Remove bushings from wheel hub. Clean grease and dirt from wheel hub.

4. Inspect bearing, spanner, bushing and inside of wheel hub for wear. Replace defective parts (Fig. 11).

5. To assemble place one (1) bushing into wheel hub. Grease bearing and spanner bushing and slide into wheel hub. Place second bushing into wheel hub.

6. Install castor wheel into castor fork and secure with bolt and lock nut. Tighten until spanner bushing bottoms against inside of castor forks.

7. Lubricate castor wheel bearing through grease fitting, using No. 2 general purpose lithium base grease.

CHECK FOR BENT BLADE

1. Park mower on a level surface. Turn PTO switch OFF, turn engine OFF engage parking brake and disconnect spark plug wire(s).

2. Rotate blade(s) until the ends face forward and backward. Measure from inside of cutting unit to cutting edge at front of blade (Fig. 12), and remember this dimension.

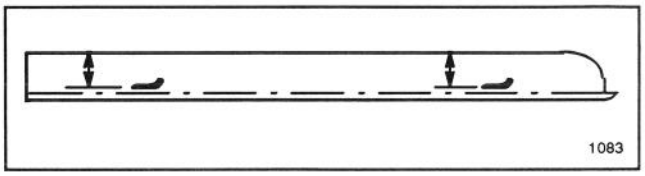

Figure 12

3. Rotate opposite end of blade forward. Measure between the cutting unit and cutting edge of blade at the same position as in step 2. The difference between dimensions obtained in steps 2 and 3 must not exceed 1/8 in. (3mm). If dimension exceeds 1/8 in. (3mm), replace the blade(s) because it is bent: refer to Replacing Cutter Blade.

WARNING

Do not try to straighten a blade that is bent, and never weld a broken or cracked blade. Always use a new blade to assure safety.

REPLACE CUTTER BLADE

Blade(s) must be replaced if a solid object is hit, the blade is out-of-balance or bent. To ensure optimum performance and continued safety conformance of the machine, use genuine TORO replacement blades. Replacement blades made by other manufacturers may result in non-conformance with safety standards.

1. Park mower on a level surface. Turn PTO switch OFF, turn engine OFF, engage parking brake and disconnect spark plug wire(s).

2. Hold the blade end using a rag or thickly padded glove. Remove blade bolt, flat washer and blade from spindle shaft (Fig. 13).

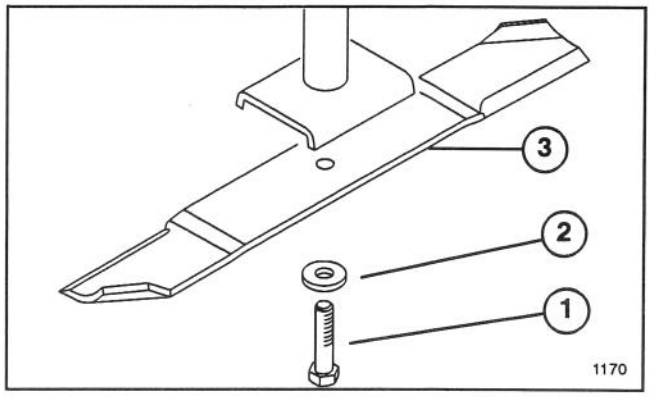

Figure 13

1 Blade bolt
2 Flat washer
3 Blade

3. Install blade, with-sail facing toward cutting unit, flat washer and blade bolt (Fig. 13). Torque blade bolt to 85–110 ft. lb.

CHECK BLADE SAIL AND SHARPENING

Both cutting edges and blade sail contribute to good quality-of-cut. The sail, the turned up portion opposite the cutting edge, is important as it pulls grass up straight, thereby producing an even cut. The sail gradually wears down during operation, this condition is normal. As the sail wears down, the quality-of-cut will degrade, although the cutting edges are sharpened. The cutting edge of the blade must be sharp so the grass is cut rather than torn. A dull cutting edge is evident when tips of the grass appear brown and shredded. Sharpen the cutting edges to correct this condition.

1. Examine cutting ends of the blade carefully, especially where the flat and curved parts of the blade meet (Fig. 14-A). Sand and abrasive material can wear away the metal that connects the flat and curved parts of the blade. Check the blade(s) before using the mower. If wear is noticed (Fig. 14-B), replace the blade(s).

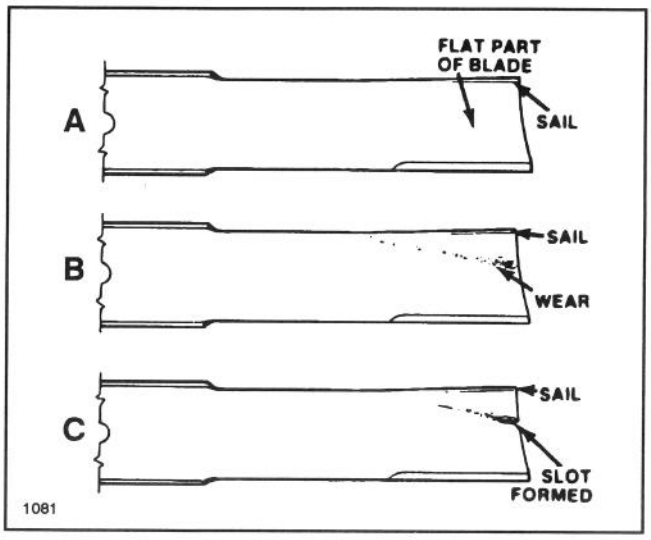

Figure 14

2. Examine cutting edges of all blade(s). Sharpen the cutting edges if they are dull or nicked. Sharpen only the top of the cutting edge and maintain the original cutting angle to make sure of sharpness (Fig. 15). The blade will remain balanced if same amount of metal is removed from both cutting edges.

DANGER

If blade is allowed to wear, a slot will form between the sail and flat part of the blade (Fig.14-C). Eventually a piece of the blade may break off and be thrown from under the housing, possibly resulting in serious injury to yourself or bystanders.

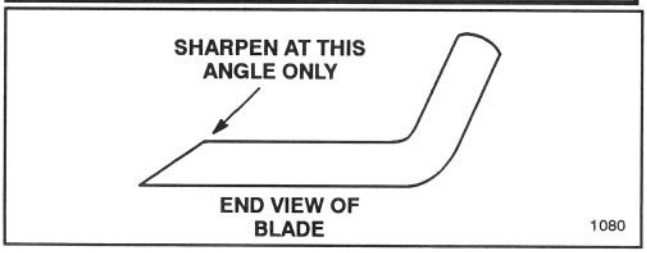

Figure 15

Note: Remove the blades: refer to Replace Cutter Blades, steps 2 and 3. After sharpening the cutting edges, install blade, flat washer and blade bolt. Blade sails must face toward cutting unit. Torque blade bolt to 85–110 ft. lb.

CORRECTING CUTTING UNIT MISMATCH

If one cutter blade cuts lower than the others, correct as follows:

1. Park mower on a level surface. Turn PTO switch OFF, turn engine OFF, engage parking brake and disconnect spark plug wire(s).

2. Adjust tire pressure in all tires to specifications and check that blade(s) are not bent: refer to Checking for Bent Blade.

3. Place height-of-cut to the 2-1/2 in. position: refer to Adjusting Height-Of-Cut. Make sure height-of-cut pins are resting on frame cushions.

4. Rotate blades so tips line up with one another. Tips of all adjacent blades must be within 1/8 in. of each other. If tips are not within 1/8 in. of each other add shims Part No. 3256-24 between spindle housing and bottom of cutting unit to align blade(s).

Front-to-Rear Pitch

1. Position blade(s) front-to-rear (Fig. 16). Measure at "C" and "D" locations (Fig. 16), from level surface to the cutting edge of blade(s) (Fig. 17).

2. Mower should be 1/8 in.–5/8 in. lower in front "C" than rear "D".

3. To change front-to-rear pitch move equal number of thrust washers on both front castor shafts. Move thrust washers from top to bottom to raise, or bottom to top to lower pitch (Fig. 18).

4. Check side-to-side level of cutting unit.

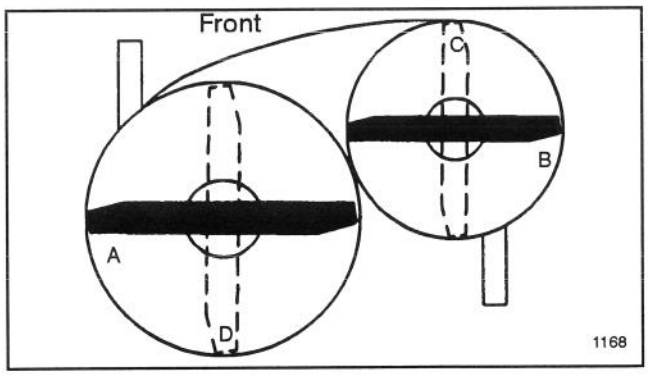

Figure 16

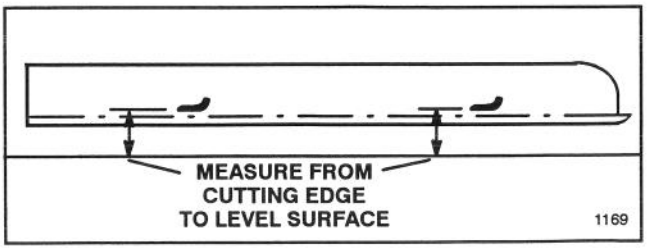

Figure 17

Side-to-Side Leveling

1. Position blade(s) side-to-side (Fig. 16). Measure at "A" and "B" locations (Fig. 16), from level surface to the cutting edge of blade(s) (Fig. 17).

2. The difference. between measurements "A" and "B" should be no more than1/4 in.

3. To change side-to-side leveling move thrust washers on one front castor shaft only. Move thrust washers from top to bottom to raise, or bottom to top to lower (Fig. 18).

4. Re-check front-to-rear pitch of cutting unit.

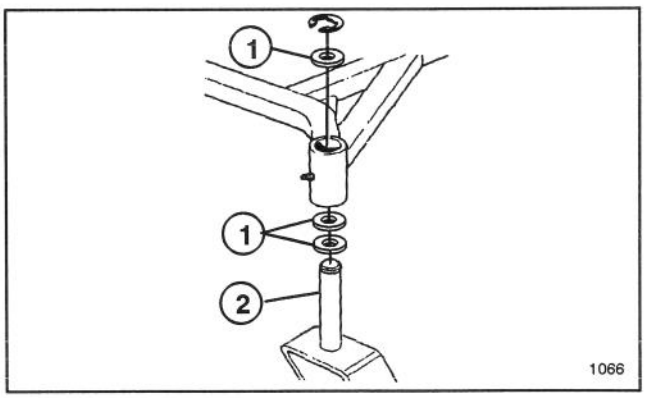

Figure 18

1 Thrust washer (locate as required)
2 Castor shaft

MAINTENANCE

REPLACE DECK BELT

Squealing when belt is rotating, blades slipping when cutting grass, frayed edges, burn marks and cracks are signs of a worn belt. Replace the belt if any of these conditions are evident.

1. Park mower on a level surface. Turn PTO switch OFF, turn engine OFF, engage parking brake and disconnect spark plug wire(s).

2. Remove covers from top of cutting unit.

3. Loosen jam nuts on each adjusting shaft and remove engine to deck drive belt (Fig. 19).

4. Unhook spring from idler arm to relieve tension on deck belt (Fig. 20) and remove worn belt from pulleys.

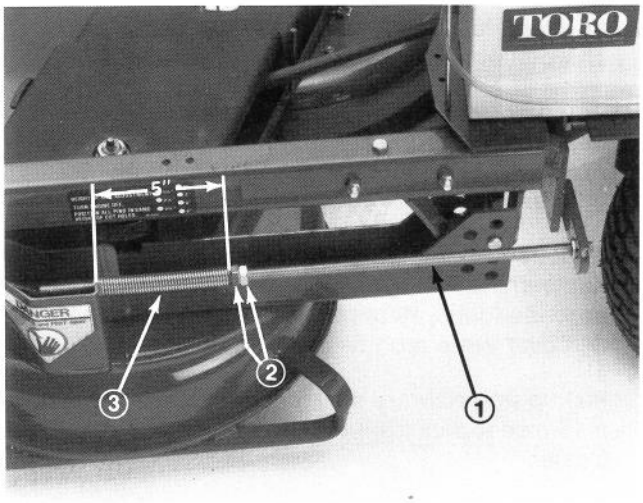

Figure 19

1	Adjusting shaft	3	Spring
2	Jam nuts		

5. Install new belt around spindle pulleys and idler pulley. Hook spring to idler arm (Fig. 20).

6. Install belt to clutch and drive pulley (Fig. 19).

7. Tighten jam nuts on adjusting shafts until springs are compressed to a length of 5 in. measured between bracket and jam nuts (Fig. 19).

8. Reinstall belt covers.

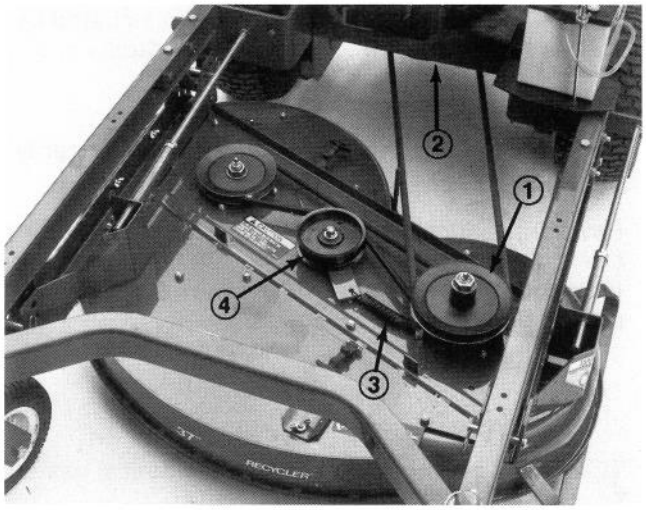

Figure 20

1	Drive pulley	3	Idler spring
2	Clutch pulley (not shown)	4	Idler pulley

IDENTIFICATION AND ORDERING

MODEL AND SERIAL NUMBERS

The cutting deck has two identification numbers: a model number and a serial number. The two numbers are stamped into a plate which is located on carrier frame behind the right front castor wheel. In any correspondence concerning the mower, supply the model and serial numbers to assure that correct information and replacement parts are obtained.

To order replacement parts from an authorized TORO Distributor, supply the following information:

1. Model and serial numbers of the machine.

2. Part number, description and quantity of parts desired.

Note: Do not order by reference number if a parts catalog is being used; use the part number.

TORO ProLine Products

THE TORO TOTAL COVERAGE GUARANTEE

A One Year Limited Warranty
(A Full Two-Year Warranty for Residential Use)

What Is Covered By This Express Warranty?

The Toro Company promises to repair any TORO ProLine product used for commercial, institutional, or rental purposes if defective in materials or workmanship for a period of one year from the date of purchase. The cost of parts and labor are included as well as transportation within a 15 mile radius of a TORO ProLine Service Dealer.

What Products Are Covered By This Warranty?

ProLine products covered by this warranty include the ProLine 118, 120, 220, 616, 620, 724 riding products and wide area walk behind mowers and their cutting decks and accessories.

How About Residential Use?

TORO ProLine products used for residential use are covered by a full two–year warranty.

How Do You Get Warranty Service?

Should you feel your TORO ProLine product contains a defect in materials or workmanship, contact the dealer who sold you the product or any TORO ProLine Service Dealer. The Yellow Pages of your telephone directory is a good reference source; look under TORO Commercial Service Dealers. The Service Dealer will either arrange service at his/her dealership or recommend another authorized Service Dealer who may be more convenient. You may need proof of purchase (copy of registration card, sales receipt, etc.) for warranty validation.

If for any reason you are dissatisfied with a Service Dealer's analysis of the defect in materials or workmanship or if you need a referral to a TORO ProLine Service Dealer, please feel free to contact us at the following address:

Toro Customer Service Department
8111 Lyndale Avenue South
Bloomington, MN 55420-1196
612-888-8801

What Must You Do To Keep The Warranty In Effect?

You must maintain your TORO Product by following the maintenance procedures described in the operator's manual. Such routine maintenance, whether performed by a dealer or by you, is at your expense.

What Does This Warranty Not Cover? and How Does Your State Law Relate To This Warranty?

There is no other express warranty except as described above. This express warranty does not cover:

- Cost of regular maintenance service or parts, such as filters, fuel, lubricants, tune–up parts, blade sharpening, brake and clutch adjustments.
- Any product or part which has been altered or misused or required replacement or repair due to normal wear, accidents, or lack of proper maintenance.
- Repairs necessary due to improper fuel, contaminants in the fuel system, or failure to properly prepare the fuel system prior to any period of non–use over three months.
- Pickup and delivery charges for distances beyond a 15 mile radius from a TORO ProLine Service Dealer.

All repairs covered by this warranty must be performed by a TORO Service Dealer using Toro approved replacement parts.

Repair by a TORO Service Dealer is your sole remedy under this warranty.

The Toro Company is not liable for indirect, incidental or consequential damages in connection with the use of the TORO Products covered by this warranty, including any cost or expense of providing substitute equipment or service during reasonable periods of malfunction or non–use pending completion of repairs under this warranty. Some states do not allow exclusions of incidental or consequential damages, so the above exclusion may not apply to you.

This warranty gives you specific legal rights, and you may also have other rights which vary from state to state.

COUNTRIES OTHER THAN THE UNITED STATES OR CANADA

Customers who have purchased TORO products exported from the United States or Canada should contact their TORO Distributor (Dealer) to obtain guarantee policies for your country, province, or state. If for any reason you are dissatisfied with your Distributor's service or have difficulty obtaining guarantee information, contact the TORO importer. If all other remedies fail, you may contact us at The Toro Company.