FORM NO. 3316-523 Rev. A

TORO®

YARD TRACTOR

MODEL NO. 72042-4900001 & UP
MODEL NO. 72043-4900001 & UP
MODEL NO. 72083-4900001 & UP

SET-UP INSTRUCTIONS

Loose Parts

Note: Use the chart below to verify all parts have been shipped.

DESCRIPTION	QTY.	USE
Front Wheel	2	Install front wheels.
Flat Washer-large OD	2	
Shim Washer	4	
Dust Cover	2	
Cotter Pin	2	
Hub Cap (model 72083 only)	2	
Rear Wheel	2	Install rear wheels.
Wheel Bolt	10	
Hub Cap (model 72083 only)	2	
Steering Wheel	1	Install steering wheel.
Wave Washer	1	
Flat Washer	1	
Roll Pin	1	
Seat	1	Install the seat.
Spacer-small ID	2	
Spacer-large ID	2	
Shoulder Bolt	2	
Knob	2	
Flat Washer	2	
Key	1	Use in ignition switch.
Operator's Manual	1	Read manual before operating tractor.

©The Toro Company - 1994
All Rights Reserved

Printed in USA

Install Front Wheels

Note: If wheels are already installed, refer to Check Tire Pressure (below).

1. Slide wheel onto axle with valve stem in (Fig. 1).
2. Wheel end play should be 0-.015" (0-.4 mm). Use shim washers (as required) and large OD flat washer for spacing on the axle. Insert cotter pin through the axle and bend the ends of the pin open (Fig. 1).
3. Push the dust cover (Fig. 1) onto the end of the axle so it snaps over washer.

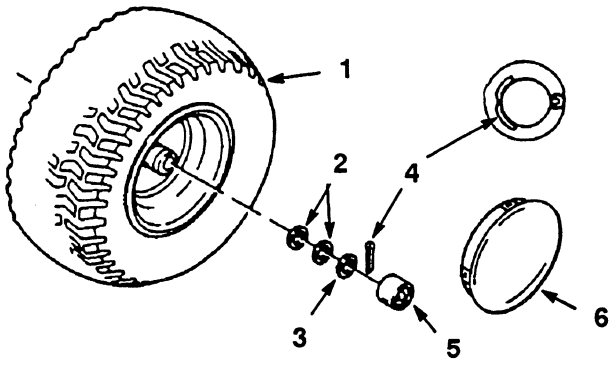

Figure 1

1. Wheel
2. Shim washers (as required)
3. Large OD flat washer
4. Cotter pin
5. Dust cover
6. Hub cap

4. Repeat steps 1-3 on opposite side.
5. Grease the wheel bearings.
6. Install hub caps, optional on some models.

Install Rear Wheels

1. Install wheel onto axle with valve stem in (Fig. 2).
2. Torque wheel bolts to 75-80 ft-lb (105-112 nm).
3. Install hub caps, optional on some models.

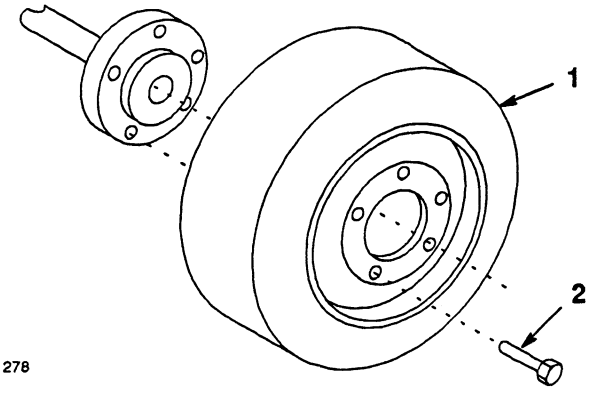

Figure 2

1. Wheel
2. Wheel bolts

Check Tire Pressure

Check front and rear tire pressure. See Operator's Manual for specification.

Install Steering Wheel

1. Position front wheels straight ahead.
2. Slide wave washer then flat washer over steering shaft (Fig. 3).
3. Position the steering wheel onto the shaft. Line up the hole in the steering wheel with the hole in the shaft (Fig. 3). From the seat you should be able to read the brand logo on the steering wheel.
4. To align the holes, insert a punch or long nail partially through the holes in the steering wheel and shaft. Then insert the roll pin into the hole on the opposite side.
5. Using a hammer, drive the roll pin in until it is flush with the outside of the steering wheel (Fig. 3).

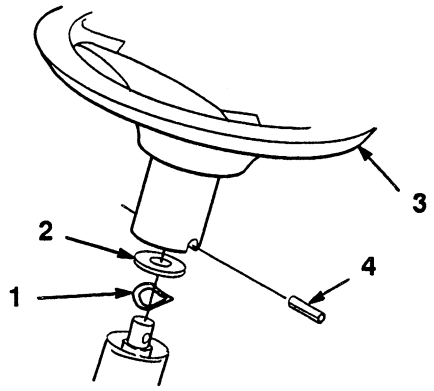

Figure 3

1. Wave washer
2. Flat washer
3. Steering wheel
4. Roll pin

Install Seat

Note: If the seat is already installed, proceed to Activate The Battery, page 4.

1. Install large ID spacer and shoulder bolts into rear holes of seat (Fig. 4).
2. Position the seat onto the seat base by inserting the two shoulder bolts through key hole openings at the end of both slots (Fig. 4).
3. Locate small ID spacer between seat and seat base, thread the knobs and flat washers into the front holes in the seat (Fig. 4). Adjust the seat and tighten the knobs.
4. Route seat switch wire and connector through center opening in the seat base. Push the seat switch connector fully into the wire harness connector (Fig. 4).
5. Secure the seat switch wire cable to the fender opening with wire clip (Fig. 4).

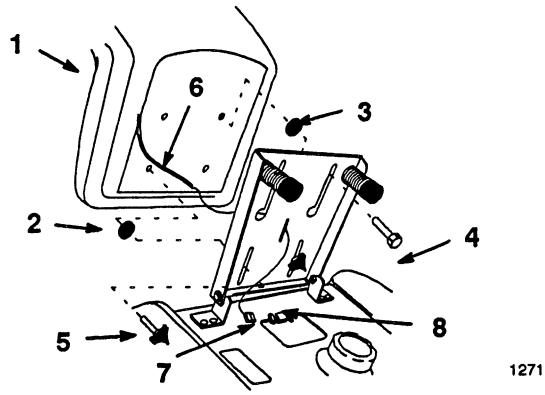

Figure 4

1. Seat
2. Spacer-small ID
3. Spacer-large ID
4. Bolt and flat washer
5. Knob and flat washer
6. Wire and connector
7. Wire harness connector
8. Wire clip

Activate the Battery

Bulk electrolyte with 1.260 specific gravity must be purchased from a local battery supply outlet.

1. Remove the battery from the tractor: refer to Operator's Manual, Removing the Battery.

   IMPORTANT: Be careful not to damage the long vent tube when removing the battery box.

⚠ DANGER

POTENTIAL HAZARD

- **Battery electrolyte contains sulfuric acid which is a deadly poison and it causes severe burns.**

WHAT CAN HAPPEN

- **If you carelessly drink electrolyte you could die or if it gets onto your skin you will be burned.**

HOW TO AVOID THE HAZARD

- **Do not drink electrolyte and avoid contact with skin, eyes or clothing. Wear safety glasses to shield your eyes and rubber gloves to protect your hands.**
- **Fill the battery where clean water is always available for flushing the skin.**
- **Follow all instructions and comply with all safety messages on the electrolyte container.**

2. Remove filler caps from the battery. Slowly pour electrolyte into each cell until the electrolyte level is up to the lower part of the tube (Fig. 5).

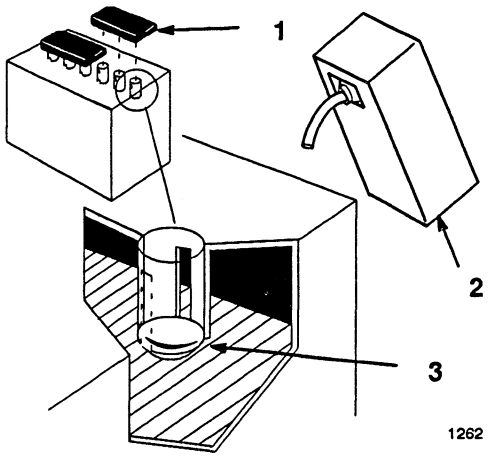

Figure 5

1. Filler caps
2. Electrolyte
3. Lower part of the tube

3. Leave the covers off and connect a 3 to 4 amp battery charger to the battery posts (Fig. 6). Charge the battery at a rate of 4 amperes or less for 4 hours (12 volts).

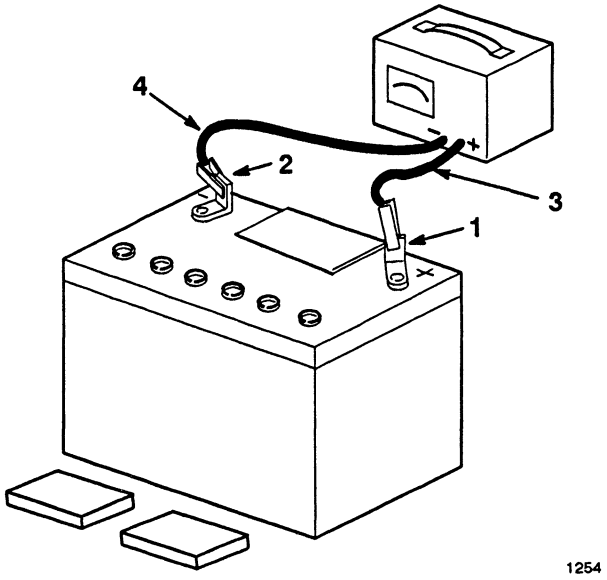

Figure 6

1. Positive post
2. Negative post
3. Charger red (+) wire
4. Charger black (-) wire

⚠ WARNING

POTENTIAL HAZARD
- **Charging battery produces gasses.**

WHAT CAN HAPPEN
- **Battery gasses can explode.**

HOW TO AVOID THE HAZARD
- **Keep cigarettes, sparks and flames away from battery.**

4. When the battery is fully charged, disconnect the charger from the electrical outlet then from the negative and positive battery posts (Fig. 6).

5. Slowly pour electrolyte into each cell until the level is once again up to the "UPPER" line on the battery case (Fig. 5) and install covers.

6. Install the battery into the tractor: refer to the Operator's Manual, Installing the Battery.

Fill Crankcase with Oil

The tractor is shipped from the factory without oil in the engine crankcase: refer to the Operator's Manual, Engine Oil Specifications for oil type, viscosity, and crankcase capacity. Only add about 80% of the specified amount of oil. Then check the oil level and add only enough oil to raise the level to the "FULL" mark on the dipstick.

Lubricate the Tractor

Refer to the Operator's Manual, Greasing and Lubrication.

Insert Key into Switch

Check Safety System

Refer to the Operator's Manual, Checking Safety System.

Electric Clutch Break-In

The electric clutch requires initial break-in to seat the mating surfaces. Engage/disengage the clutch 10-20 cycles with the mower installed. Rotating the blades provides load for break-in.

Adjust Electric Clutch

The electric clutch has three (3) adjustment nuts that all must be adjusted the same (Fig. 7).

1. Insert a 0.010 inch (.25 mm) feeler gauge into the slot (Fig. 7).

2. Turn the nut until light resistance is felt on the gauge.

3. Repeat for all three adjusting nuts.

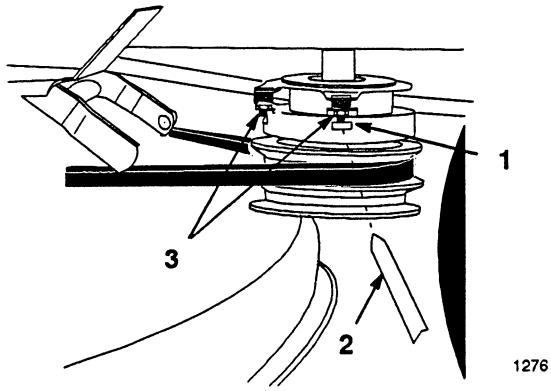

Figure 7

1. Slot
2. 0.010" (25 mm) Feeler gauge
3. Adjusting nut

Test Drive the Tractor

Make sure all electrical and mechanical systems are operating properly.


TORO®