FORM NO. 3316–680

TORO®

MODEL NO. 30576–490001 & UP

INSTALLATION INSTRUCTIONS

52" GRASS COLLECTION SYSTEM

ProLine 117, 118 & 120

SAFETY INSTRUCTIONS

BEFORE OPERATING

1. Read, understand and follow the instructions in the Operator's Manual and on the machine before starting. Become familiar with all controls and know how to stop quickly. A replacement manual is available by sending complete Model and Serial Number to:

The Toro Company
8111 Lyndale Avenue South
Bloomington, Minnesota 55420-1196

2. Never allow children to operate the machine. Do not allow adults to operate machine without proper instruction. Only trained operators who have read this manual should operate this machine.

3. Never operate the machine when under the influence of drugs or alcohol.

4. Remove all debris or other objects that might be picked up and thrown by the cutter blades. Keep all bystanders away from the mowing area.

5. Do not operate machine unless all shields, guards, covers and safety devices in place. If a shield, guard, safety device or decal is illegible or damaged, repair or replace it before operating machine.

6. Do not operate machine while wearing sandals, tennis shoes, sneakers or shorts. Also, do not wear loose fitting clothing which could get caught in moving parts. Always wear long pants and substantial shoes. Wearing safety glasses, safety shoes and a helmet is advisable and required by some local ordinances and insurance regulations.

7. Check interlock switches daily for proper operation Do not rely entirely on safety switches -shut off engine before getting off seat. If a switch fails, replace it before operating the machine. The interlock system is for your protection, so do not bypass it. Replace all interlock switches every two years. Interlock switches should be adjusted so:

A. Engine cannot be started unless traction pedal is released (neutral position)-and PTO lever is DISENGAGED (off position).

B. Engine stops if operator gets off seat when traction pedal is depressed.

C. Engine stops if operator gets off seat when PTO lever is ENGAGED (on position).

8. Grass deflectors must be installed in lowest position on side discharge units.

A. Use an approved container.

B. Never remove fuel cap or add fuel when the engine is running. Allow the engine to cool before refueling. Do not smoke.

C. Never refuel the machine indoors.

D. Keep hood closed when refueling.

E. Fill fuel tank outdoors and only to within an inch from the top of the tank, not the filler neck. Do not overfill.

WHILE OPERATING

9. Never carry passengers.

10. Traverse slopes carefully. Do not start or stop suddenly when traveling uphill or downhill.

11. Operator must be skilled and trained in how to drive on hillsides. Failure to use caution on slopes or hills may cause loss of control and vehicle to tip or roll possibly resulting in personal injury or death.

12. Using the machine demands attention, and to prevent loss of control:

A. Mow only in daylight or when there is good artificial light.

B. Watch for holes or other hidden hazards.

C. Do not drive close to a sand trap, ditch, creek or other hazard.

D. Reduce speed when making sharp turns.

E. Avoid sudden starts and stops.

© The TORO Company – 1994

SAFETY INSTRUCTIONS

F. Cut slopes carefully. Do not start, stop, or turn suddenly on hillsides.

G. Before backing up, look to the rear and assure no one is behind the machine.

H. Watch out for traffic when near or crossing roads. Always yield the right-of -way.

13. If engine stalls or loses headway and cannot make it to the top of a slope, do not turn machine around. Always back slowly straight down the slope.

14. Do not operate unless grass deflector, Recycler® cover or entire grass collector is installed. The grass deflector must always be installed and in lowest position on the side discharge cutting unit. This product is designed to drive objects into the ground where they lose energy quickly in grassy areas. **However, don't take an injury risk!!** When a person or pet appears unexpectedly in or near the mowing area, **STOP MOWING.** Careless operation, combined with terrain angles, ricochets, or improperly positioned guards, can lead to thrown object injuries. Do not resume mowing until area is cleared.

15. Never raise the cutting unit or change height-of-cut while the blade(s) are rotating.

16. If the cutting blade(s) strike a solid object or the machine vibrates abnormally, shut the engine off. Remove spark plug wire(s) to prevent accidental starting. Check cutting unit and traction unit for damage and malfunctioning parts. Repair any damage before restarting the engine and operating the cutting unit. Be sure blade(s) are in good condition and blade bolts are tightened to specification.

17. Do not touch engine or muffler while engine is running or soon after it is stopped. These areas could be hot enough to cause a burn.

MAINTENANCE

18. Remove key from ignition switch and disconnect spark plug wire(s) to prevent accidental starting of the engine when servicing, adjusting or storing the machine.

19. Be sure machine is in safe operating condition by keeping nuts, bolts and screws tight. Check the blade mounting bolts and nuts frequently to be sure they are tightened to specification.

20. To reduce potential fire hazard, keep the engine free of excessive grease, grass, leaves and accumulations of dirt.

21. Make sure all hydraulic line connectors are tight, and all hydraulic hoses and lines are in good condition before applying pressure to the system.

22. Keep body and hands away from pin hole leaks in hydraulic lines that eject high pressure hydraulic fluid. Use cardboard or paper to find hydraulic leaks. Hydraulic fluid escaping under pressure can penetrate skin and cause injury. Fluid accidentally injected into the skin must be surgically removed within a few hours by a doctor familiar with this form of injury or gangrene may result.

23. Before disconnecting or performing any work on the hydraulic system, all pressure in system must be relieved by stopping engine, lowering implement to the ground and placing hydrostatic traction control in neutral.

24. If the engine must be running to perform a maintenance adjustment, keep hands, feet, clothing and other parts of the body away from the cutting unit blades and other moving parts.

25. Do not overspeed the engine by changing governor setting. To assure safety and accuracy, have an Authorized Toro Distributor check maximum engine speed.

26. Allow engine to cool before storing mower in any enclosure such as a garage or storage shed. Make sure the mower fuel tank is empty if machine is to be stored in excess of 30 days. Do not store mower near any open flame or where gasoline fumes may be ignited by a spark. Always store gasoline in a safety-approved, red metal container.

27. At the time of manufacture, the machine conformed to the safety standards in effect. To ensure optimum performance and continued safety conformance of the machine, use genuine TORO replacement parts and accessories. Replacement parts and accessories made by other manufacturers may result in non-conformance with safety standards and could void the warranty.

LOOSE PARTS CHART

Note: Use this chart as a checklist to make sure all parts have been received. Without these parts, total set-up cannot be completed.

DESCRIPTION	QTY.	USE
Valve Stem Extension	1	Install Wheel Weight
Capscrew–5/16-18 x 4	2	
Flat Washer–5/16	2	
Capscrew–5/16–18 x 7/8	1	Install Front Baffle
Capscrew–5/16-18 x 5/8	1	
Keps Lock Nut–5/16-18	1	
Carriage Bolt–5/16-18 x 3/4	2	Install Rear Baffle
Capscrew–5/16-18 x 7/8	1	
Keps Lock Nut–5/16-18	3	
Self-Tapping Screw–1/4-20 x 3/4	2	Install Center Ring Baffle
Lock Nut–1/4-20	2	
Capscrew–3/8-16 x 1	4	
Lock Nut–3/8-16	4	
Capscrew–1/4-20 x 3/4	2	Install Right Ring Baffle
Lock Nut–1/4-20	2	
Brackets	2	Install Blower Assembly
Carriage Bolt–5/16-18 x 5/8	4	
Keps Lock Nut–5/16-18	6	
Carriage Bolt–5/16-18 x 3/4	2	
Carriage Bolt–5/16-18 x 3/4	3	Install Idler Assembly
Flat Washer–5/16	3	
Keps Lock Nut–5/16-18	3	
Latch	1	Install Latch
Machine Screw	2	
Nut	2	
Warning Decal	1	Install to Farrier Frame or Deck
Capscrew–5/16-18 x 1	6	Install Hopper Brackets
Lock Nut–5/16-18	6	
Reinforcing Plate	1	
Capscrew–5/16-18 x 2	5	Install Hopper Frame
Lock Nut–5/16-18	5	
Knob	2	Mount Grass Deflector
Washer	2	
Mounting Brackets R.H. & L.H.	2	

SAFETY AND INSTRUCTION DECALS

The following safety and instruction decals are affixed to the unit. If any decal becomes illegible or damaged, install a new decal. Part numbers are listed below and in your Parts Catalog. Replacement decal can be ordered from your local Authorized Toro, Proline Service Dealer.



ON BLOWER HOUSING
(Part No. 54–9220)



ON FRONT OF BLOWER HOUSING
(Part No. 82–5510)



INSTALL ON CUTTING UNIT
(Part No. 43–1120)

SET-UP INSTRUCTIONS

INSTALL WHEEL WEIGHT (Left Front Wheel Only)

Note: If unit is equipped with Optional Brake Kit, refer to Brake Kit Instructions for additional information on mounting wheel weight.

1. Remove cap from valve stem and install valve stem extension.

2. Slide wheel weight into mounting position over valve stem, aligning weight with (2) mounting holes in wheel.

3. Secure weight to wheel with (2) 5/16-18 x 4 capscrews and flat washers.

INSTALL NEW SPINDLE PULLEY

1. Remove right belt cover from deck.

2. Remove nut securing spring anchor to capscrew on deck. Lift anchor off capscrew and allow belt to relax (Fig. 1).

3. Remove belt from right spindle pulley (Fig. 1).

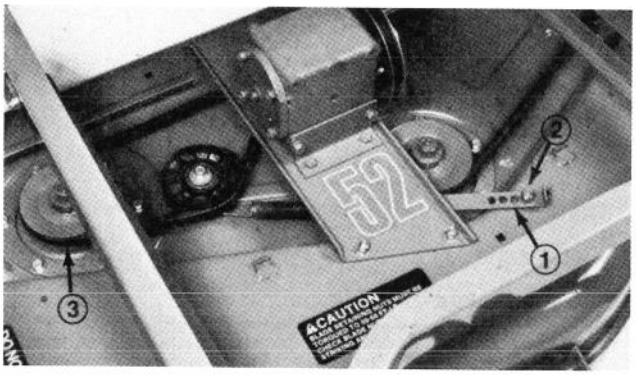

Figure 1

1. Spring anchor
2. Nut
3. Right spindle pulley

4. Remove six flange bolts and nuts holding spindle housing assembly and support ring against cutting unit. Slide spindle housing assembly out bottom of cutting unit (Fig. 2).

5. Remove nut retaining pulley on spindle shaft. Pull pulley off shaft.

Note: Hold spindle assembly together or support it from bottom of deck before removing nut and pulley. Spindle shaft may slide through spindle housing.

6. Install new double-groove pulley onto splined spindle shaft and secure with lock nut. Torque nut to 50–60 ft.-lb. (68–81 Nm)

7. Slide pulley end of spindle assembly through hole in cutting unit. Mount spindle assembly and support ring in place with (6) flange bolts and nuts. (Fig. 2). (On later models the support ring is welded to the deck).

8. Install deck belt around large lower pulley.

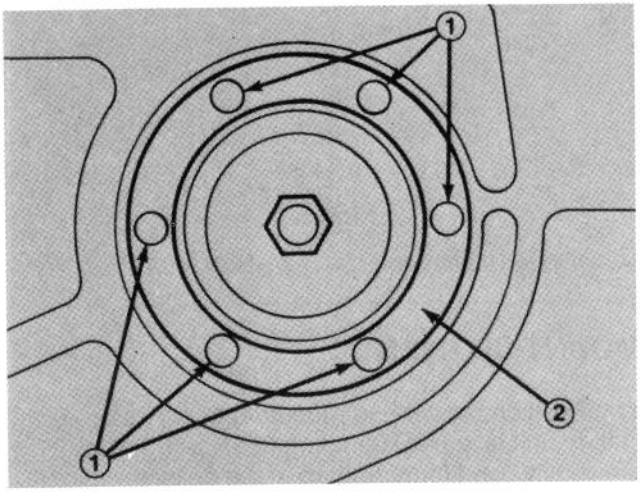

Figure 2

1. Flange bolts
2. Support ring

9. Adjust belt tension by pulling spring anchor until 30–40 lb. of force is applied to spring. Slide spring anchor over capscrew in appropriate mounting hole and install nut (Fig. 1).

REMOVE GRASS DEFLECTOR

1. Remove capscrews, lock nuts and springs securing deflector mounts to pivot bracket. Remove deflector (Fig. 3).

2. Remove carriage bolts, lock washers and nuts securing pivot bracket to housing (Fig. 3).

3. Save grass deflector and hardware for use when side discharging.

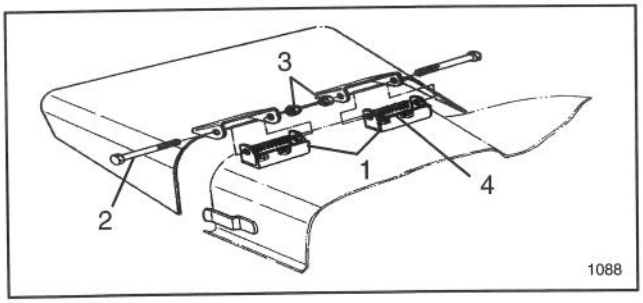

Figure 3

1. Pivot bracket
2. Capscrew
3. Lock nut
4. Spring

MOUNT DECK BAFFLES

1. Mark and drill a 3/8" dia. hole thru center of the deflector stop (Fig. 4).



Figure 4

1. Deflector stop

2. Position front baffle on underside of cutting unit and secure front of deflector with 5/16-18 x 7/8" capscrew and lock nut at mounting hole (Fig. 5).

3. Using front baffle as a template, mark and drill (2) 3/8 in. diameter holes in deck (Fig. 5). Secure with (2) 5/16-18 x 7/8" capscrews and lock nuts.

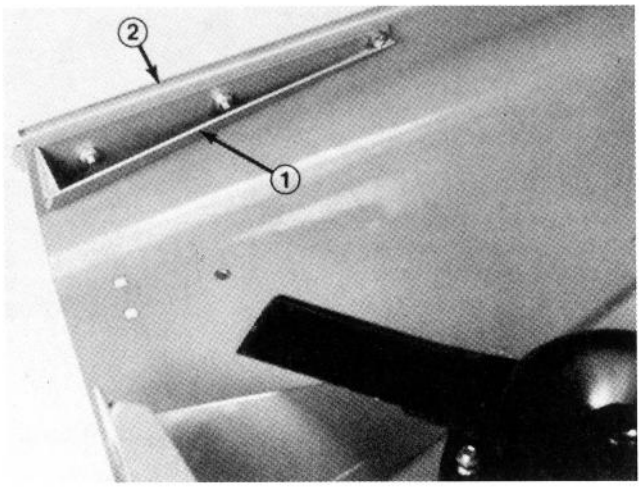

Figure 5

1. Front baffle
2. Edge of deck

SET-UP INSTRUCTIONS

4. Align rear baffle with corner of discharge opening as shown (Fig. 6).

5. Using baffle as a template, mark and drill (3) 3/8" dia holes thru deck.

6. Secure baffle to deck with (2) 5/16 x 3/4" carriage bolts, (1) 5/16-18 x 7/8" capscrew and (3) lock nuts (Fig. 6).

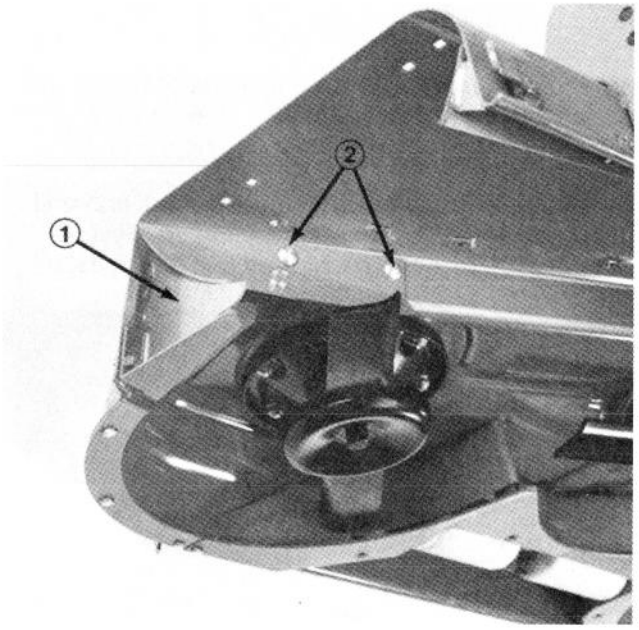

Figure 6

1. Rear baffle
2. Carriage bolts

7. Position center ring baffle on deck as shown (Fig. 7). Using a long thin pencil or punch, mark (4) middle mounting holes in deck. (Holes may already be in deck)

8. Drill (4) 13/32" dia. holes in deck, if required.

9. Mount center baffle to deck with (4) 3/8-16 x 1" capscrews and lock nuts (Fig. 7).

10. Using center baffle as a template, drill (2) 9/32" dia. holes thru curve edge of deck (Fig. 7). Secure baffle to edge of deck with (2) 1/4-20 x 3/4" capscrews and lock nuts.

11. Align right ring baffle with end of center baffle and edge of deck (Fig. 7). Mark and drill (2) 9/32" dia. holes thru curve edge of deck (Fig. 7). Secure right baffle to edge of deck with (2) 1/4-20 x 3/4" capscrews and lock nuts.

12. Make sure all fasteners are tight. Carefully rotate blades by hand, to make sure they clear all baffles.

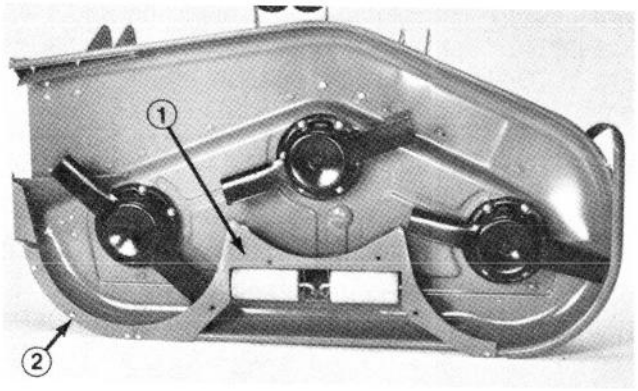

Figure 7

1. Center ring baffle
2. Right ring baffle

MOUNT BLOWER

1. Position blower and mounting brackets onto cutting unit, aligning mounting holes with holes previously used for mounting grass deflector (Fig. 8). (Figure shown with blower removed)

2. Using blower brackets as templates, mark and drill remaining 3/8" dia. holes in deck (Fig. 8).

3. Remove (2) knobs and washers securing blower to mounting brackets and remove blower (Fig. 8).

4. Secure each bracket to deck with a bracket plate (Fig. 8, Inset) and (3) 5/16-18 x 5/8" carriage bolts and lock nuts. Position bracket plates between bolt heads and bottom, inside of deck.

5. Route blower drive belt around small spindle pulley.

6. Slide blower onto mounting bracket alignment studs (Fig. 8) while routing belt around blower pulley.

Note: If blower assembly does not easily slide onto mounting brackets, loosen alignment bolts slightly.

7. Secure blower to mounting brackets with (2) knobs and washers.

SET-UP INSTRUCTIONS

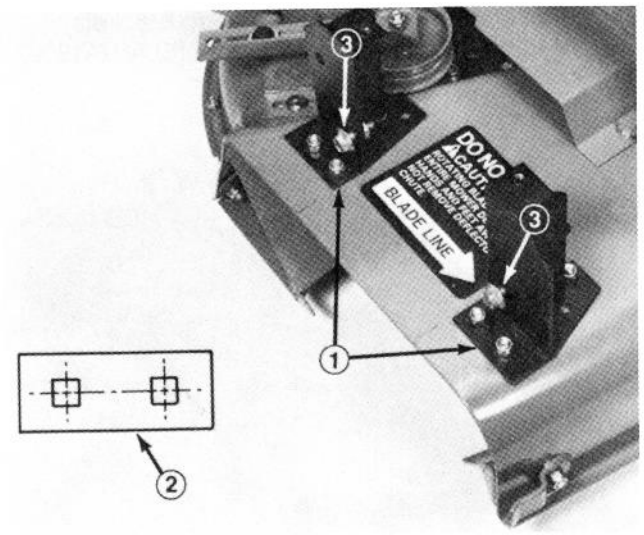

Figure 8

1. Blower mounting brackets
2. Bracket plate
3. Alignment studs

INSTALL IDLER ASSEMBLY

1. Position idler assembly on deck (Fig. 9).

2. Engage idler lever (toward belt) and slide idler pulley firmly into blower belt. To provide for future adjustment, there should be at least 1/4" clearance between front of idler mounting bracket and raised rib in deck (Fig. 9, inset). Mounting bracket should be positioned on flat part of deck. Make sure idler pulley clears spindle pulley and blower and idler lever clears carrier frame when in the engaged position. Mounting bracket should be at approximately 15° to deck rib (Fig. 9, inset).

3. Using dimensions shown in (Fig. 9, Inset), locate and drill (3) 3/8" dia. holes in deck.

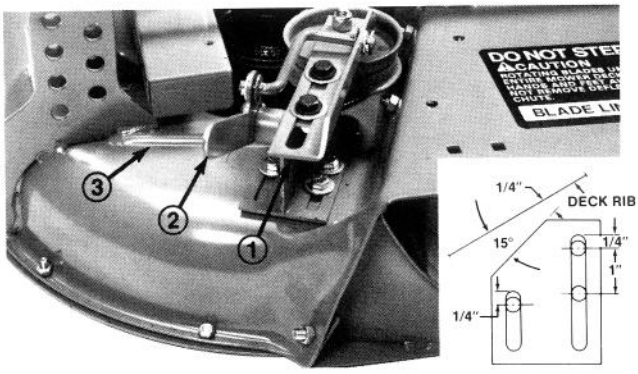

Figure 9

1. Idler assembly
2. Idler lever
3. Raised rib in deck

4. Disengage idler lever and mount idler assembly to deck with (3) 5/16–18 x 3/4" lg. capscrew, 5/16 washers and locknut. Position washer between nut and idler assembly.

5. Engage idler lever and check belt tension. Adjust if necessary.

MODIFY BELT COVER AND LATCH

1. Measure 6-1/4" from bend in belt cover. Mark dimension and cut off excess material (Fig. 10).

2. Install belt cover and secure latch.

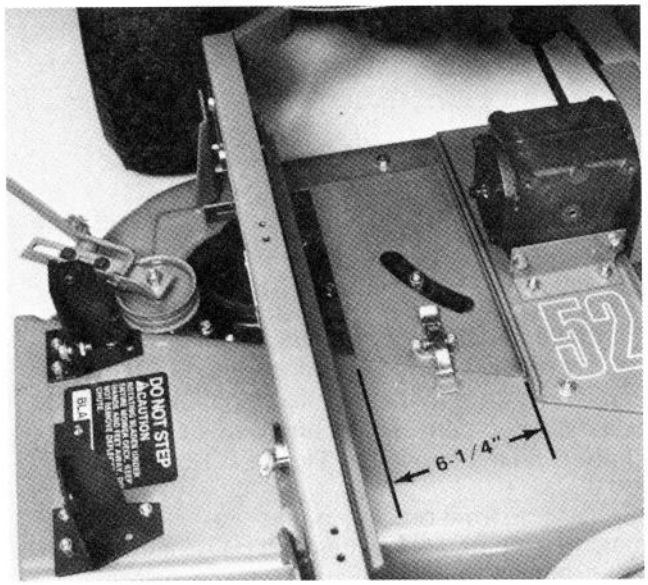

Figure 10

1. Rear mounting bracket
2. Blower belt around pulley

3. Install new spindle pulley cover on cutting deck (Fig. 11).

4. Hook latch to front of cover and engage latch (Fig. 11).

5. Locate and mark position of latch mounting holes on deck. Drill (2) 7/32" dia. holes thru deck. Secure latch to deck with (2) machine screws and flange nuts (Fig. 11).

6. Apply warning decal to deck nest to blower assembly (Fig. 11).

SET-UP INSTRUCTIONS

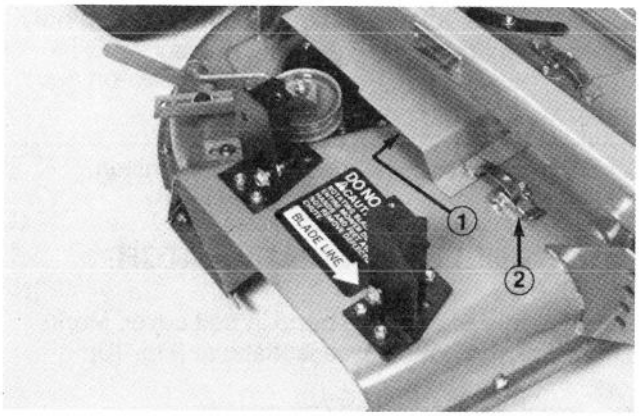

Figure 11

1. New cover
2. Latch
3. Decal

INSTALL HOPPER ASSEMBLY

NOTE: Remove fuel tank mounting straps and raise right side of fuel tank for access to holes when installing rear bracket.

1. Align brackets with mounting holes in frame. Secure rear bracket to machine with (4) 5/16-18x1 capscrews, nuts and (1) reinforcing plate. Plate is to be positioned between nut and inside of frame channel on top capscrew (Fig. 12 & 13).

2. Secure front bracket to machine with (2) 5/16-18 x 1 capscrews, nuts and (1) reinforcing plate. Plate is to be positioned between nut and inside of frame channel on top capscrew (Fig. 12).



Figure 12

1. Rear bracket
2. Front bracket
3. Reinforcing plate on this screw (inside frame)

3. Slide hopper frame into mounting brackets, align mounting holes and secure with (5) 5/16-18 x 2 capscrews and nuts (Fig. 13).



Figure 13

1. Rear mounting holes
2. Hopper frame

Note: When lowering hopper top, make sure bag link pivots upward and tip fits over chute (Fig. 14).

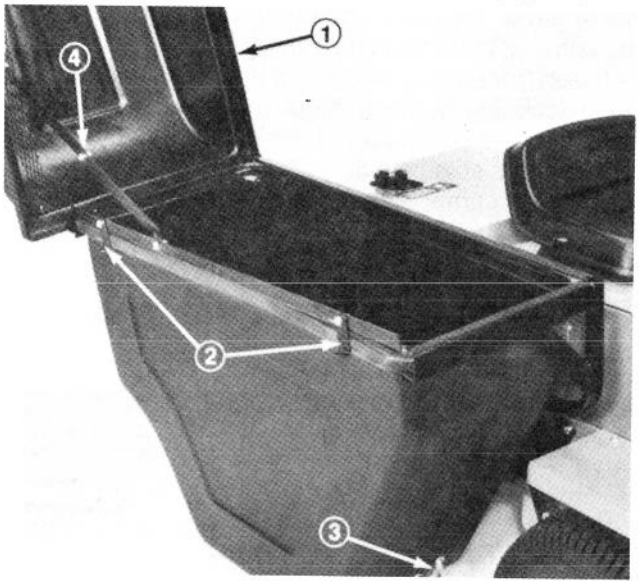

Figure 14

1. Hopper top
2. Locking clips
3. Hopper handle
4. Bag link

SET-UP INSTRUCTIONS

GRASS DEFLECTOR STORAGE

1. Position deflector mounts on outside of pivot brackets and secure parts together with capscrews, lock nuts and springs (Fig. 15). Both lock nuts must face each other. Tighten locknuts until they are flush against deflector pivots. Lift deflector and allow to drop to check spring tension.

2. Mount cutting unit grass deflector to front of hopper frame with (2) knobs and washers when using grass catcher (Fig. 15).

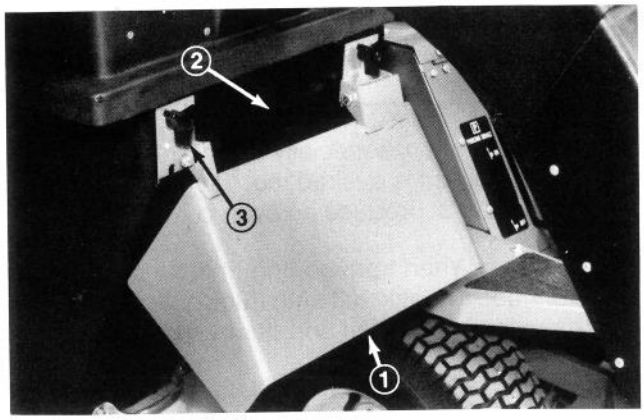

Figure 15

1. Grass deflector
2. Hopper frame
3. Knob and washer

MOUNT BLOWER HOUSING CHUTE

1. Set deck into desired height-of-cut.

2. Slide chute over blower opening and into mounting studs (Fig. 16).

3. Lower hopper hood and align chute with hood snout. Secure chute in position with lock nuts and brackets. Wide end of brackets to be positioned toward rear (Fig. 16).

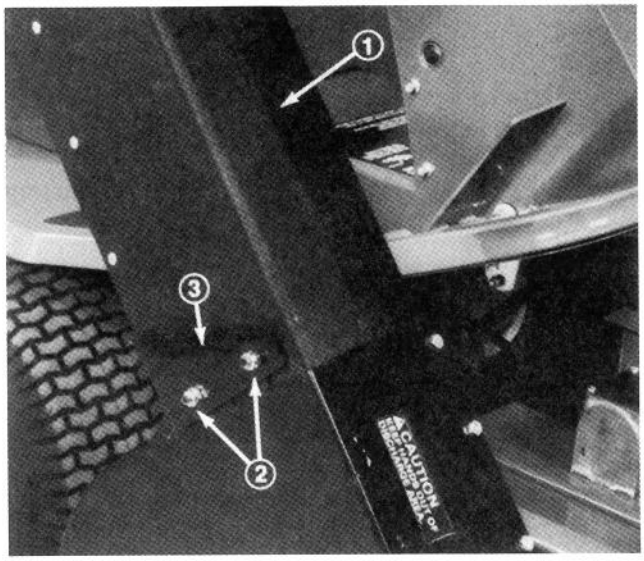

Figure 16

1. Chute
2. Mounting studs
3. Mounting bracket

OPERATING INSTRUCTIONS

WARNING

When grass collector is removed, NEVER operate without deflector in place.

For best performance, regulate traction pedal to keep engine rpm high and somewhat constant. A good rule to follow is: decrease ground speed as the load on the cutting blade increases; and increase ground speed as load on the blade decreases. This allows the engine, working with the transmission, to sense the proper ground speed while maintaining high blade tip speed, necessary for good quality-of-cut, vacuuming action and to throw grass into the hopper. If blower speed drops too low, plugging may result. Refer to Cutting Unit and Traction Unit Operator's Manual for operation of each.

CAUTION

Use care to avoid collision between grass bag and any stationary objects. Always trim with left side of cutting unit.

1. Stop engine when emptying hopper to prevent engine air intake from being clogged with clippings.

2. This grass collector is designed for use in wet or dry conditions. Do not collect extremely long grass as the bag will fill too quickly.

3. The grass collector hood is designed to exhaust air. This allows the hopper to fill completely without decreasing performance. Grass will fall through the opening in the front of the hood when the hopper is full. Immediately disengage the power take off (PTO), set the parking brake and shut off the ignition. Empty hopper. Failure to empty hopper will plug the chute. After emptying hopper, check that grass clippings have not fallen into chute.

4. When bagging wet, heavy grass, some clippings may not be thrown completely through the chute. The hole in the bottom of the chute allows these clippings to drop out without plugging the chute. When this happens, reduce ground speed.

5. Optional hi-lift blades (Toro part no. 44–5480) will give improved performance in wet grass.

6. While operating, check frequently for excessive clippings left on turf or uncut grass. If those conditions occur, the blower or cutting unit may be plugged. Stop unit, disengage PTO, set parking brake and shut of ignition. Check for obstructions in the chute, blower or cutting unit. Clear any obstructions using a stick or similar tool. Check that screen in hood is clear of obstructions. Check blower belt. If slipping, readjust.

DANGER

Never place hands or feet in chute, blower or cutting unit.

7. Cut grass often, especially when turf growth is rapid. If shorter turf is desired, cut the grass again. Overlap swaths to produce an even cutting pattern.

IMPORTANT: When transporting unit, tie down grass collector hood or back unit onto truck or trailer to avoid wind throwing hood open and damaging it.

8. To remove blower assembly, disengage idler assembly, remove belt cover and lift belt off spindle pulley. Remove (2) knobs and washers securing blower to mounting brackets and remove blower and chute. Slide cutting unit grass deflector onto alignment bolts and secure to mounting brackets with knobs and washers. Install belt cover (Fig. 17).

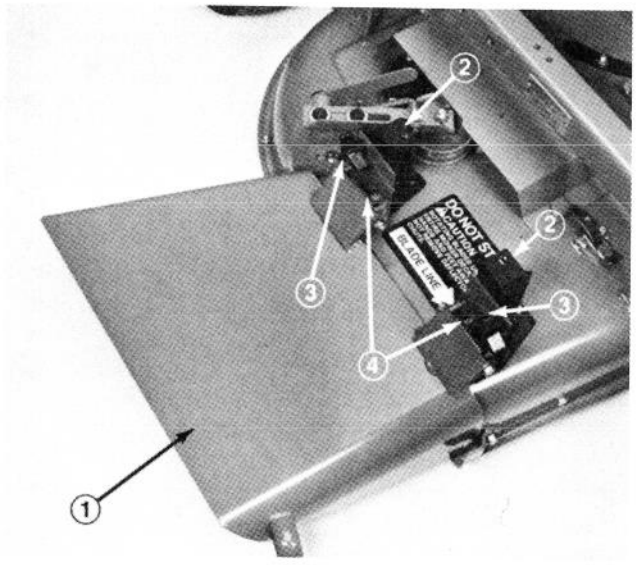

Figure 17

1. Grass deflector
2. Mounting bracket
3. Knob and washer
4. Alignment bolts

MAINTENANCE

1. Keep unit clean, checking that engine cooling fins are free of dirt and chaff. Make sure all fasteners are tight. Check baffles and shields for wear and replace as needed.

2. Check gearbox impeller for tightness every 50 hours. Torque impeller shaft bolt to 220–230 in.-lb.

3. Clean grass clippings from hood chute, blower and cutting unit after each use. Wash underside of cutting unit daily with hose. An excessive build-up of clippings will impair bagging performance.

4. Check belt tension and wear every 50 hours. To adjust belt tension, loosen idler mounting screws, engage idler lever and push pulley firmly into blower belt. Tighten mounting screws.

5. The blower gear box should need little maintenance. Check for leakage every 50 hours. If leakage should occur, replace seals and refill with two ounces of No. 2 molybdenum base grease. Repack bearings with same before assembling.

6. Refer to Cutting Unit and Traction Unit Operator's Manuals for service requirements of each.

MAINTENANCE CHART

Date	Hours Used	Lubrication						

TORO ProLine Products

THE TORO TOTAL COVERAGE GUARANTEE

A One Year Limited Warranty
(A Full Two-Year Warranty for Residential Use)

What Is Covered By This Express Warranty?

The Toro Company promises to repair any TORO ProLine product used for commercial, institutional, or rental purposes if defective in materials or workmanship for a period of one year from the date of purchase. The cost of parts and labor are included as well as transportation within a 15 mile radius of a TORO ProLine Service Dealer.

What Products Are Covered By This Warranty?

ProLine products covered by this warranty include the ProLine 118, 120, 220, 616, 620, 724 riding products and wide area walk behind mowers and their cutting decks and accessories.

How About Residential Use?

TORO ProLine products used for residential use are covered by a full two–year warranty.

How Do You Get Warranty Service?

Should you feel your TORO ProLine product contains a defect in materials or workmanship, contact the dealer who sold you the product or any TORO ProLine Service Dealer. The Yellow Pages of your telephone directory is a good reference source; look under TORO Commercial Service Dealers. The Service Dealer will either arrange service at his/her dealership or recommend another authorized Service Dealer who may be more convenient. You may need proof of purchase (copy of registration card, sales receipt, etc.) for warranty validation.

If for any reason you are dissatisfied with a Service Dealer's analysis of the defect in materials or workmanship or if you need a referral to a TORO ProLine Service Dealer, please feel free to contact us at the following address:

Toro Customer Service Department
8111 Lyndale Avenue South
Bloomington, MN 55420-1196
612-888-8801

What Must You Do To Keep The Warranty In Effect?

You must maintain your TORO Product by following the maintenance procedures described in the operator's manual. Such routine maintenance, whether performed by a dealer or by you, is at your expense.

What Does This Warranty Not Cover? and How Does Your State Law Relate To This Warranty?

There is no other express warranty except as described above. This express warranty does not cover:

- Cost of regular maintenance service or parts, such as filters, fuel, lubricants, tune–up parts, blade sharpening, brake and clutch adjustments.
- Any product or part which has been altered or misused or required replacement or repair due to normal wear, accidents, or lack of proper maintenance.
- Repairs necessary due to improper fuel, contaminants in the fuel system, or failure to properly prepare the fuel system prior to any period of non–use over three months.
- Pickup and delivery charges for distances beyond a 15 mile radius from a TORO ProLine Service Dealer.

All repairs covered by this warranty must be performed by a TORO Service Dealer using Toro approved replacement parts.

Repair by a TORO Service Dealer is your sole remedy under this warranty.

The Toro Company is not liable for indirect, incidental or consequential damages in connection with the use of the TORO Products covered by this warranty, including any cost or expense of providing substitute equipment or service during reasonable periods of malfunction or non–use pending completion of repairs under this warranty. Some states do not allow exclusions of incidental or consequential damages, so the above exclusion may not apply to you.

This warranty gives you specific legal rights, and you may also have other rights which vary from state to state.

COUNTRIES OTHER THAN THE UNITED STATES OR CANADA

Customers who have purchased TORO products exported from the United States or Canada should contact their TORO Distributor (Dealer) to obtain guarantee policies for your country, province, or state. If for any reason you are dissatisfied with your Distributor's service or have difficulty obtaining guarantee information, contact the TORO importer. If all other remedies fail, you may contact us at The Toro Company.