Form No. 3394-879 Rev A

Step Kit

Multi-Pro 5800 Turf Sprayer

Model No. 130-8230

Model No. 130-8231

Installation Instructions

⚠ WARNING

CALIFORNIA
Proposition 65 Warning

This product contains a chemical or chemicals known to the State of California to cause cancer, birth defects, or reproductive harm.

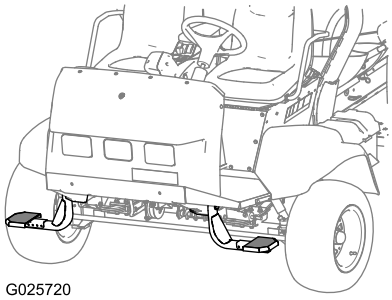

G025720

Figure 1

Installation

Loose Parts

Use the chart below to verify that all parts have been shipped.

Procedure	Description	Qty.	Use
1	Spacer bracket	1	Install the left step mount.
	Step mount (Model 130-8231)	1	
	Hex-head bolt (1/2 x 6 inch)	1	
	Locknut (1/2 inch)	1	
	Washer (1/2 inch)	1	
2	Spacer bracket	1	Install the right step mount.
	Step mount (Model 130-8230)	1	
	Hex-head bolt (1/2 x 6 inch)	1	
	Locknut (1/2 inch)	1	
	Washer (1/2 inch)	1	
3	Step	1	Install the step.
	Hex-head bolt (1/4 x 2-1/4 inch)	2	
	Flange nut (1/4 inch)	2	
	Washer (1/4 inch)	2	

© 2015—The Toro® Company
8111 Lyndale Avenue South
Bloomington, MN 55420

Register at www.Toro.com.

CE

Original Instructions (EN)
Printed in the USA
All Rights Reserved

3394-879 A

1

Installing the Left Step Mount (Model 130-8231)

Parts needed for this procedure:

1	Spacer bracket
1	Step mount (Model 130-8231)
1	Hex-head bolt (1/2 x 6 inch)
1	Locknut (1/2 inch)
1	Washer (1/2 inch)

Procedure

1. At the front of the machine, align the holes in the spacer bracket with the holes in the front frame tube (Figure 2).

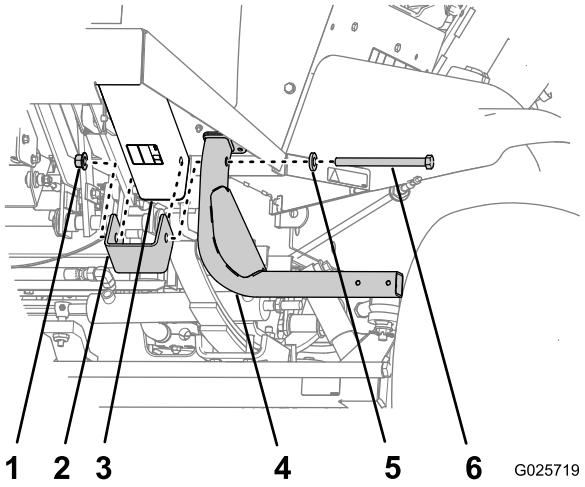

Figure 2

1. Locknut (1/2 inch)
2. Spacer bracket
3. Front-frame tube
4. Step mount
5. Washer (1/2 inch)
6. Hex-head bolt (1/2 x 6 inch)

2. Align the holes in the step mount with the holes in the spacer bracket and the frame tube (Figure 2).
3. Secure the step mount and the spacer bracket to the frame tube with a hex-head bolt (1/2 x 6 inch), lock nut, and washer (Figure 2).
4. Torque the nut and bolt to 91 to 123 N-m (67 to 83 lb-ft).

2

Installing the Right Step Mount (Model 130-8230)

Parts needed for this procedure:

1	Spacer bracket
1	Step mount (Model 130-8230)
1	Hex-head bolt (1/2 x 6 inch)
1	Locknut (1/2 inch)
1	Washer (1/2 inch)

Procedure

Perform steps 1 through 4 from 1 Installing the Left Step Mount (Model 130-8231) (page 2) for the right step mount (Model 130-8231).

3

Installing the Step (Model 130-8230 or 130-8231)

Parts needed for this procedure:

1	Step
2	Hex-head bolt (1/4 x 2-1/4 inch)
2	Flange nut (1/4 inch)
2	Washer (1/4 inch)

Procedure

1. Align the 2 holes in the step with 2 of the holes in the end of the step mount (Figure 3).

   Note: You can install the step in 1 of 5 positions to best suit your preference.

   Note: Use the outer-hole position when the machine is equipped with the cab option.

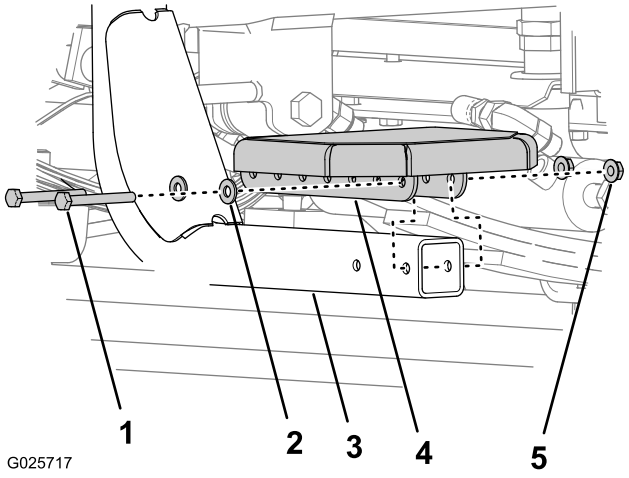

Figure 3

1. Hex-head bolts (1/4 x 2-1/4 inch)
2. Washer (1/4 inch)
3. Step mount
4. Step
5. Flange nut (1/4 inch)

2. Secure the step to the step mount with 2 hex-head bolts (1/4 x 2-1/4 inch), 2 flange nuts, and 2 washers (Figure 3).
3. Torque the bolts to 1017 to 1243 N-cm (90 to 110 lb-in).



Count on it.