FORM NO. 3317–700

TORO®

MODEL NO. 30503

INSTALLATION INSTRUCTIONS

62" BLOWER KIT
GROUNDSMASTER 200 X 62" SERIES

SAFETY INSTRUCTIONS

BEFORE OPERATING

1. Read and understand the contents of this manual before starting and operating the machine. Become familiar with all controls and know how to stop quickly. A free replacement manual is available by sending complete Model and Serial Numbers to:

The Toro Company

8111 Lyndale Avenue South

Minneapolis, Minnesota 55420

2. Never allow children to operate the machine. Do not allow adults to operate the machine without proper instruction. Only trained operators, skilled in slope operation and who have read this manual should operate this machine.

3. Never operate machine when under the influence of drugs or alcohol.

4. Remove all debris or other objects that might be picked up and thrown by cutter blades. Keep all bystanders away from the operating area.

5. Keep all shields and safety devices in place. If a shield, safety device, or decal is defective or damaged, repair or replace it before operating machine. Also, tighten any loose nuts, bolts, and screws to insure machine is in safe operating condition.

6. Do not wear loose fitting clothing because it could get caught in moving parts. Always wear long pants and substantial shoes. Wearing safety glasses, safety shoes, and a helmet is advisable and required by some local ordinances and insurance regulations.

7. Be sure interlock switches are adjusted correctly so engine cannot be started unless traction pedal is released–neutral position–and PTO switch is in DISENGAGED position.

8. Fill fuel tank before starting the engine. Avoid spilling any fuel. Since fuel is flammable, handle it carefully.

A. Use an approved fuel container.

B. Do not fill fuel tank when engine is hot or running.

C. Do not smoke while handling fuel.

D. Fill fuel tank outdoors and up to about one inch (25 mm) from the top of the tank, not the filler neck.

E. Wipe up any spilled fuel.

WHILE OPERATING

9. Sit on the seat when starting the engine and operating the machine.

10. Always make sure seat pivot retaining pin is installed.

11. Before starting the engine:

A. Engage parking brake.

B. Make sure traction pedal is in neutral and PTO is in DISENGAGE position.

C. After engine is started, release parking brake and keep foot off traction pedal. Machine must not move. If movement is evident, the neutral return mechanism is adjusted incorrectly. Shut engine off and adjust until machine does not move when traction pedal is released.

12. Do not run the engine in a confined area without adequate ventilation. Exhaust fumes are hazardous and could possibly be deadly.

13. Maximum seating capacity is one person. Therefore, never carry passengers.

14. Check carefully for overhead clearances before driving under any objects.

15. The grass deflector or complete blower assembly must always be installed on cutting unit.

16. Operator must be skilled and trained in how to drive on hillsides. Failure to use caution on slopes or hills may cause loss of control and vehicle to tip or roll, possibly resulting in personal injury or death.

17. Traverse slopes carefully. Do not start or stop suddenly when traversing slopes or when traveling uphill or downhill.

18. If engine stalls or machine loses headway and cannot make it to the top of a slope, do not turn machine around. Always back slowly straight down the slope.

© The TORO Company – 1995

SAFETY INSTRUCTIONS

19. Using the machine demands the operator's complete attention. To prevent loss of control:

A. Operate only in daylight or when there is good artificial light.

B. Drive slowly.

C. Avoid sudden starts and stops.

D. Look behind machine before backing up.

E. Watch for holes or other hidden hazards.

F. Do not drive close to a sand trap, ditch, creek, or hazard.

G. Reduce speed when making sharp turns and when turning on a hillside.

H. The cutting deck must be lowered when going down slopes for steering control.

20. The grass deflector must always be installed and in lowest position on the cutting unit when blower assembly is removed. This product is designed to drive objects into the ground where they lose energy quickly in grassy areas. However, don't take an injury risk! When person or pet appears unexpectedly in or near the mowing area, STOP MOWING. Careless operation, combined with terrain angles, ricochets, or improperly positioned guards, can lead to thrown object injuries. Do not resume mowing until area is cleared.

21. Never raise the cutting unit while the blades or other parts are rotating.

22. If cutting blades strike a solid object or the machine vibrates abnormally, disengage PTO, move throttle to SLOW, set parking brake, and shut engine off. Remove key from switch to prevent possibility of accidental starting. Check cutting unit, blower assembly and traction unit for damage and defective parts. Repair any damage before restarting the engine and operating the cutting unit. Assure cutting unit blades are in good condition and blade bolts are tightened to proper torque specifications (See Cutting Deck Operator's Manual).

23. If the cutting unit discharge area or blower assembly ever plugs, disengage PTO and shut engine off before removing the obstruction.

24. To stop machine, remove foot from traction pedal and use brakes. Gradually reversing the traction pedal can provide additional braking.

25. Do not touch engine, muffler, or it adjacent shroud while engine is running or soon after it has stopped. These areas could be hot enough to cause a burn.

26. Lower the cutting unit to the ground and remove key from switch whenever machine is left unattended.

27. Before getting of the seat:

A. Move traction pedal to neutral position and remove foot from pedal.

B. Set the parking brake and disengage the PTO.

C. Shut the engine off and remove key from ignition switch. Wait for all movement to stop before getting off the seat.

MAINTENANCE

28. Remove key from ignition switch to prevent accidental starting of the engine when servicing, adjusting, or storing the machine.

29. If major repairs are ever needed or assistance is desired, contact an Authorized TORO Distributor.

30. To reduce potential fire hazard, keep the engine free of excessive grease, grass, leaves, and accumulations of dirt.

31. Make sure machine is in safe operating condition by keeping nuts, bolts, and screws tight. Check all cutting unit blade mounting bolts frequently to assure they are tightened to proper torque specifications (See Cutting Deck Operator's Manual).

32. Make sure all hydraulic line connectors are tight, and all hydraulic hoses and lines are in good condition before applying pressure to the system.

33. Keep body and hands away from pin hole leaks or nozzles that eject hydraulic fluid under high pressure. Use paper or cardboard, not hands, to search for leaks. Hydraulic fluid escaping under pressure can have sufficient force to penetrate skin and cause serious injury. If fluid is ejected into the skin, it must be surgically removed within a few hours by a doctor familiar with this form of injury or gangrene may result.

34. Before disconnecting or performing any work on the hydraulic system, all pressure in system must be relieved by stopping engine and lowering implement to the ground.

35. If the engine must be running to perform maintenance or an adjustment, keep clear of PTO shaft, cutting unit blades, and other moving parts.

36. At the time of manufacture, the machine conformed to safety standards in effect for riding mowers. To ensure optimum performance and continued safety certification of the machine, use genuine TORO replacement parts and accessories. Replacement parts and accessories made by other manufacturers may result in non–conformance with the safety standards, and the warranty may be voided.

SAFETY INSTRUCTIONS

The following safety and instruction decals are mounted on the machine. If any decal becomes damaged or illegible, install a new decal. Part numbers are listed below or in your parts catalog.

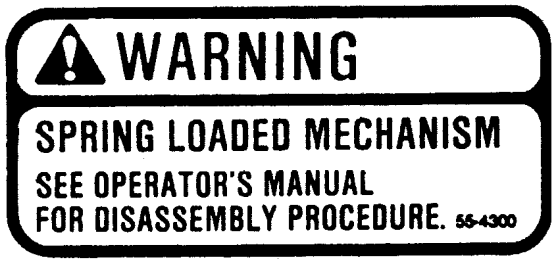

ON IDLER PULLEY ARM
(Part No. 55−4300)



ON BLOWER HOUSING
(Part No. 54−9220)



ON FRONT OF BLOWER HOUSING
(Part No. 82−5510)



ON DECK
(Part No. 66−1340)



ON SIDES OF CHUTE
(Part No. 80−4670)

LOOSE PARTS

Note: Use this chart as a checklist to assure all parts necessary for assembly have been received. Without these parts, total set-up cannot be completed. Some parts may have already been assembled at factory.

DESCRIPTION	QTY	USE
Double Pulley Pulley Nut Nut Cover	1 1 1	Install new pulley
Blade	3	Mount to spindle shafts
Front Deflector Capscrew 5/16−18 x 5/8" lg. Locknut 5/16−18	1 2 2	Mount front deflector to deck
Rear Deflector Capscrew 5/16−18 x 5/8" lg. Locknut 5/16−18	1 3 3	Mount rear deflector to deck
Rear Shelf Capscrew 3/8−16 x 1" lg. Lockwasher 3/8	1 4 4	Mount rear shelf to deck
Left shelf Capscrew 1/4−20 x 1" lg. Capscrew 1/4−20 x 3/4" lg. Locknut 1/4−20	1 2 1 3	Mount left shelf to deck
Right shelf Capscrew 1/4−20 x 1" lg. Capscrew 1/4−20 x 3/4" lg. Locknut 1/4−20	1 1 2 3	Mount Right shelf to deck
Deflector stop Capscrew 1/4−20 x 3/4" lg. Locknut 1/4−20	1 2 2	Mount to side of deck
Blower Assembly w/ Mounting Brackets	1	Mount to top of deck
Capscrew 5/16−18 x 1" lg. Locknut 5/16−18 Carriage Bolt 3/8−16 x 7/8" lg. Flange Nut 3/8−16	1 2 2 2	Secure front blower mounting bracket to deck
Capscrew 5/16−18 x 1" lg. Locknut 5/16−18 Carriage Bolt 3/8−16 x 7/8" lg. Flange Nut 3/8−16	2 2 2 2	
Idler Arm Assembly Pivot Screw 3/8−16 Bushing Washer Locknut 3/8−16 Spring Threaded Rod Flange Nut 5/16−18	1 1 1 2 1 1 1 2	Mount to top of deck
Belt	1	Mount on blower and deck spindle pulley
Cover support Machine screw #10−24 x 5/8" lg. Nut #10−24 Deck Cover Capscrew 5/16−18 x 1" lg. Flatwasher 5/16 Locknut 5/16−18 Knob	1 2 2 1 1 2 1 1	Mount new deck cover
Bumper Capscrew 3/8−16 x 1−5/8" lg. Locknut 3/8−16 Capscrew 5/16−18 x 1" lg. Locknut 5/16−18	1 2 2 4 4	Mount to blower
Chute Assembly	1	Mount to blower
Counterbalance Spring	1	Replace R.H. Counterbalance spring
Decal−Danger	1	Mount on deck
Installation Instructions	1	
Parts Catalog	1	
Registration Card	1	

Specifications and design subject to change without notice.

SET-UP INSTRUCTIONS

REMOVE CUTTING UNIT FROM TRACTION UNIT

1. Position machine on a level surface, raise cutting unit, engage parking brake, be sure traction pedal is in neutral position, PTO lever in OFF position, shut engine OFF and remove key from switch.

CAUTION

Counterbalance spring is in tension when deck is in lowered position. Always raise deck before adjusting or removing spring.

2. Disconnect counterbalance from traction unit, remove lock pins from brackets, separate spring tension assemblies from brackets and lay them down on the deck. Loosely secure lock pins to brackets to prevent losing them (Fig. 1).

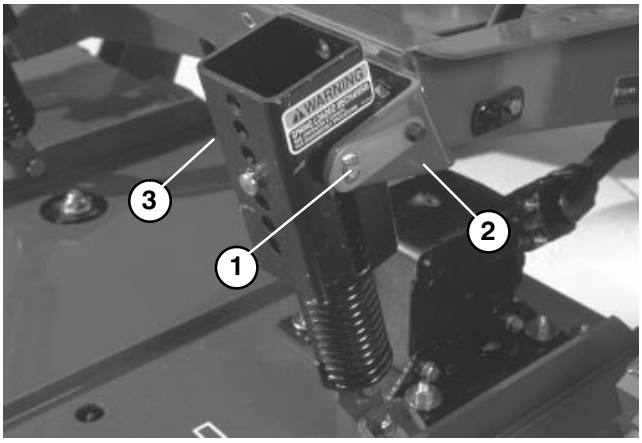

Figure 1

1. Lockpin
2. Bracket
3. Spring tension assembly
4. Height−of0cut clevis pin

3. Lower cutting unit, remove (4) pins from height−of−cut brackets (Fig. 1).

4. Start engine, raise cutting unit frame.

5. Stop engine and slide cutting unit away from traction unit and carrier frame, separating male and female sections of PTO shaft (Fig. 2).



Figure 2

1. Male PTO shaft
2. Female PTO shaft

CAUTION

Do not start engine and engage the PTO lever when PTO shaft is not connected to gear box on cutting unit. If engine is started and PTO shaft is allowed to rotate, serious injury could result.

INSTALL NEW SPINDLE PULLEY

1. Unhook latches securing right cover to top of cutting unit. Remove cover from cutting unit.

2. Loosen (2) nuts securing idler plate so tension of the idler pulley against the belt is released (Fig. 3).

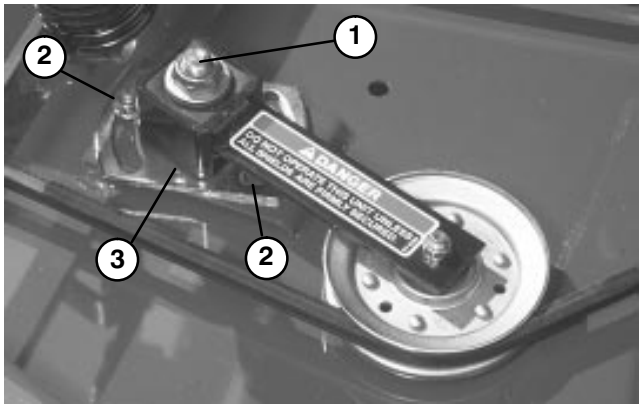

Figure 3

1. Idler adjusting nut
2. Nuts (2)
3. Idler plate

3. Remove belt from right spindle pulley (Fig. 3).

4. Remove six carriage bolts and flange nuts securing spindle housing assembly to cutting unit (Fig. 4). Slide spindle housing assembly out bottom of cutting unit.

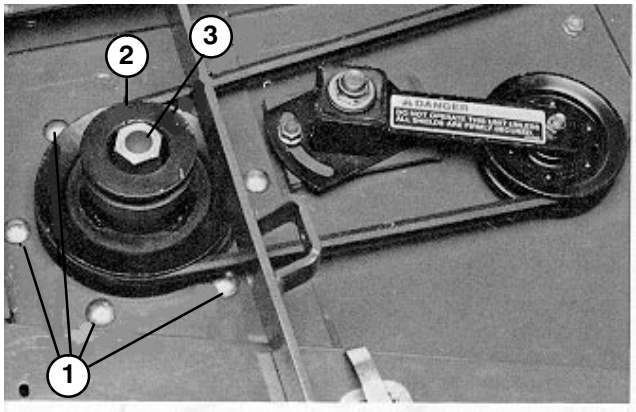

Figure 4

1. Carriage bolts
2. Double spindle pulley
3. Pulley nut

5. Remove nut and washer retaining pulley on spindle shaft. Remove pulley from shaft.

SET-UP INSTRUCTIONS

6. Slide new double spindle pulley onto spindle shaft. Do not install pulley nut at this time.

7. Slide pulley end of spindle housing assembly through hole in cutting unit, and loop belt around pulley and idler. Mount spindle assembly in place with six carriage bolts and flange nuts.

8. Install original washer and new pulley nut onto spindle shaft and tighten to 100 ft−lb. Install nut cover.

9. Adjust (tighten) idler adjusting nut to 35−40 ft−lb to achieve proper belt tension. Tighten idler plate nuts.

INSTALL NEW BLADES

1. Grasp end of blade using a glove or thickly padded glove. Remove blade bolt, flatwasher, anti−scalp cup and blade from spindle shaft (Fig. 5).

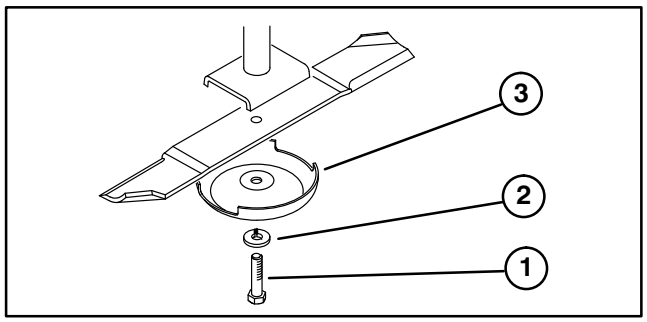

Figure 5
1. Blade bolt
2. Lockwasher
3. Anti−Scalp Cup

2. In sequence, install new blade (sail facing toward cutting unit) and anti−scalp cup. Secure parts in place with blade bolt and flatwasher. Tighten blade bolt to 85−110 ft−lb.

3. Repeat procedure on all blades.

REMOVE/MODIFY GRASS DEFLECTOR

1. Remove capscrews, locknuts and springs securing deflector mounts to pivot brackets (Fig. 6). Remove deflector.

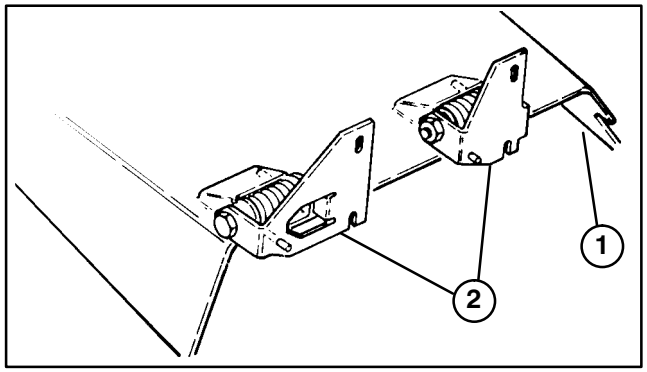

Figure 6
1. Grass deflector
2. Pivot brackets

2. Remove carriage bolts and flange nuts securing pivot brackets to housing (Fig. 6). Remove pivot brackets. Retain fasteners for future use.

3. Install new pivot brackets on deflector (Fig. 6). Do not over tighten nuts because brackets must be allowed to pivot. Save this assembly for side discharge operation.

INSTALL BLOWER MOUNTING BRACKETS

1. Remove spring latch from right side of cutting deck (Fig. 7). Retain latch for future use with right hand cover.

2. Position blower and mounting brackets on deck, aligning mounting holes with holes previously used for mounting grass deflector. Figure 7 is shown with blower removed from brackets. Make sure there is no gap between blower and cutting deck.

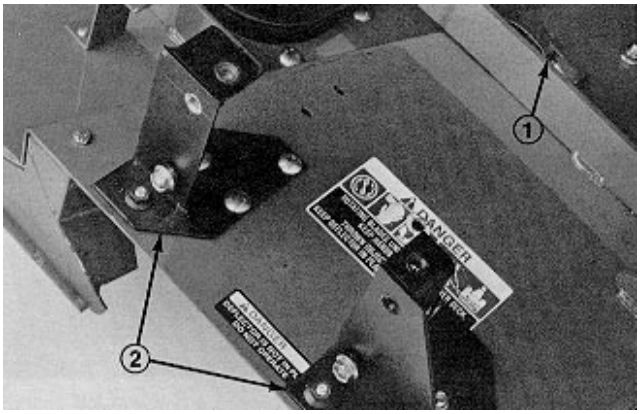

Figure 7
1. Spring latch location
2. Mounting brackets

3. Mount front and rear brackets to deck with (2) previously removed 3/8 −16 x 7/8" lg. carriage bolts and flange nuts each (Fig. 7). Bolt heads must be on top of deck.

4. Remove (2) knobs securing blower to mounting brackets. Remove blower.

5. Using each bracket as a template, mark location and drill (2) additional 11/32" dia. holes.

6. Secure front and rear brackets to deck with (2) 5/16 −18 x 3/4" lg. capscrews and locknuts each (Fig. 7). Capscrew heads must be on top of deck.

INSTALL DECK DEFLECTORS

1. Insert front deflector into deck, aligning end of deflector with edge of discharge opening (Fig. 8 & 9).

2. Using deflector as a template, mark and drill (3) 11/32" dia. holes thru front and top of deck.

SET-UP INSTRUCTIONS

3. Secure (2) front mounting tabs of deflector to deck with 5/16−18 x 5/8" lg. capscrews and 5/16−18 locknuts.

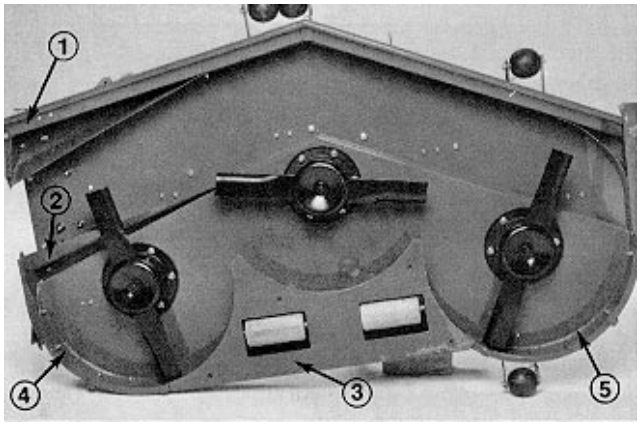

Figure 8

1. **Front deflector**
2. **Rear deflector**
3. **Rear shelf**
4. **Left shelf**
5. **Right shelf**

4. Secure front right corner of front mounting bracket and top tab of deflector to deck with a 5/16−18 x 1" lg. capscrew and locknut.

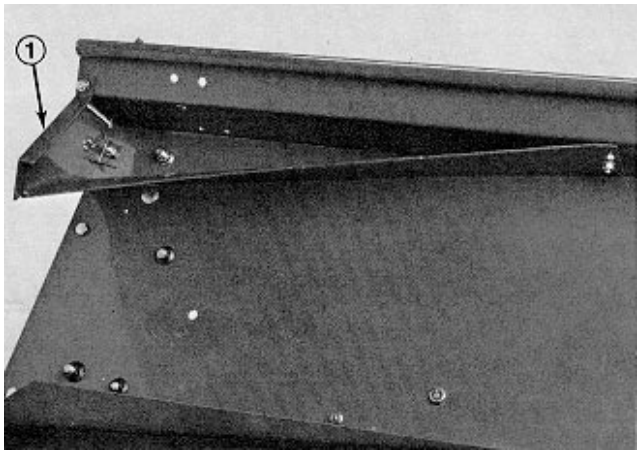

Figure 9

1. **Front deflector**

5. Insert rear deflector into deck, aligning end of deflector with edge of discharge opening (Fig. 8 & 10).

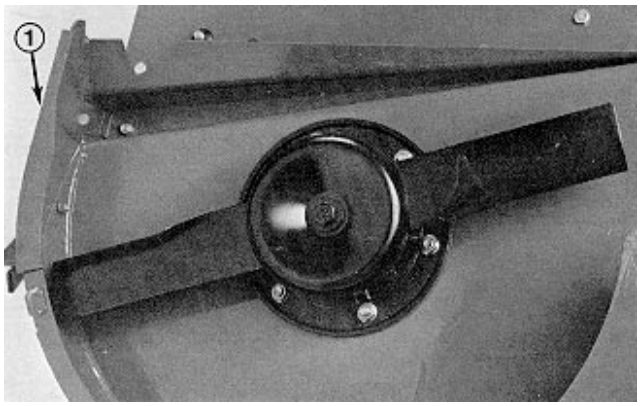

Figure 10

1. **Rear deflector**

6. Using deflector as a template, mark and drill (3) 11/32" dia. holes thru deck.

7. Secure deflector to deck with (3) 5/16−18 x 5/8" lg. capscrews and 5/16−18 locknuts.

8. Before mounting left and right shelves to deck, you must grind welds off bottom edge of deck. Paint deck after grinding.

9. Using existing holes, mount rear shelf to deck with (4) 3/8−16 x 1" lg. capscrews and 3/8 lockwashers (Fig. 11).

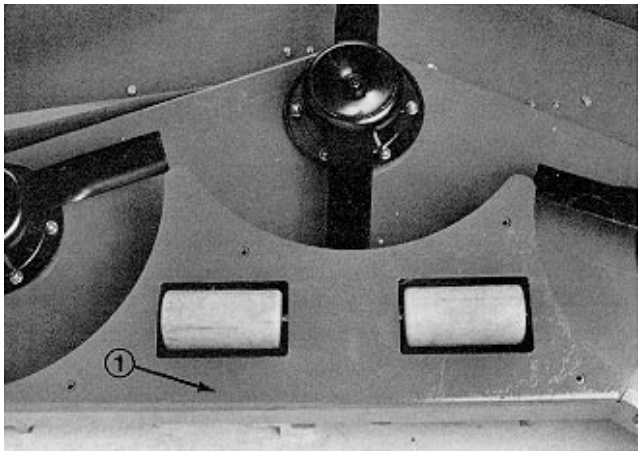

Figure 11

1. **Rear shelf**

10. Align left shelf with left end of rear shelf and edge of deck (Fig. 8 & 11).

11. Secure left shelf to deck with (2) 1/4−20 x 1" lg. capscrews, (1) 1/4−20 x 3/4" lg. capscrews and (3) locknuts. Capscrew heads to be positioned on the inside of deck.

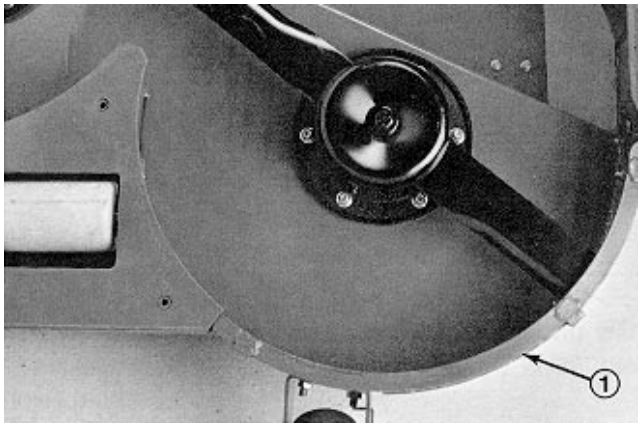

Figure 12

1. **Left shelf**

12. Align right shelf with right end of rear shelf and edge of deck (Fig. 8 & 13). Using left shelf as a template, locate, mark and drill (3) 9/32" dia. holes in deck.

SET-UP INSTRUCTIONS

13. Secure right shelf to deck with (1) 1/4−20 x 1" lg. capscrew, (2) 1/4−20 x 3/4" lg. capscrews and (3) locknuts. Capscrew heads to be positioned on the inside of deck.

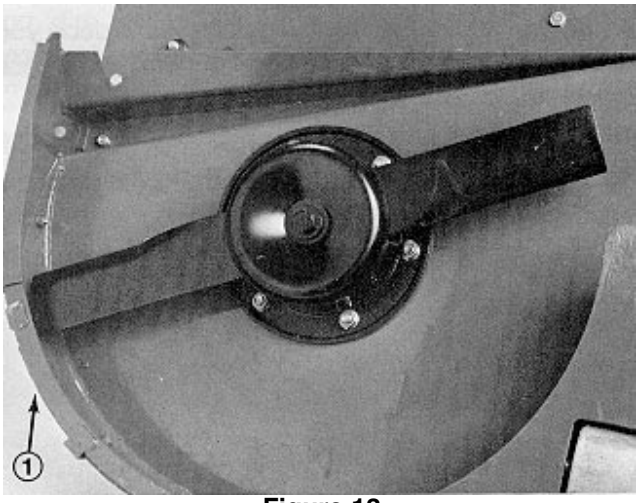

Figure 13
1. Right shelf

MOUNT NEW DEFLECTOR STOP

1. Using new deflector stop as a template, set it on the original flat deflector stop (Fig. 14). Assure new deflector stop is flush at the bottom, contacting side of deck, and parallel with outside edge of deflector support.

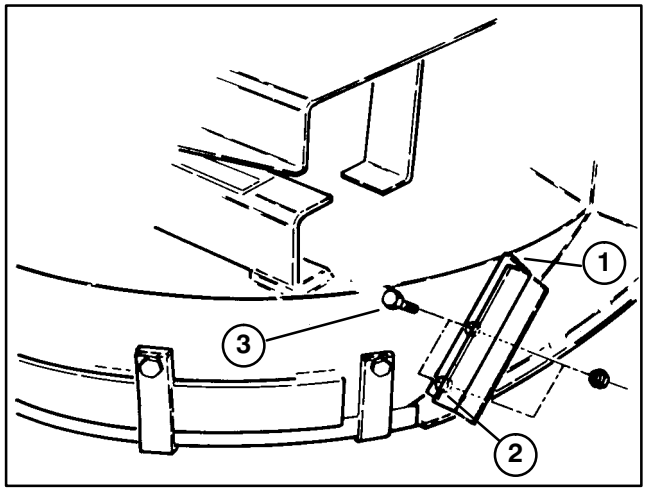

Figure 14
1. New deflector stop
2. Mark and drill holes
3. Capscrews and locknuts

2. Locate, mark and drill (2) 9/32" dia. holes through old deflector support.

3. Mount new deflector support to old deflector stop with (2) 1/4−20 x 3/4" lg. capscrews and 1/4−20 locknuts, as shown in figure 14.

MOUNT IDLER ASSEMBLY

1. Using dimensions shown in figure 15, locate and drill 13/32" dia. hole in deck.

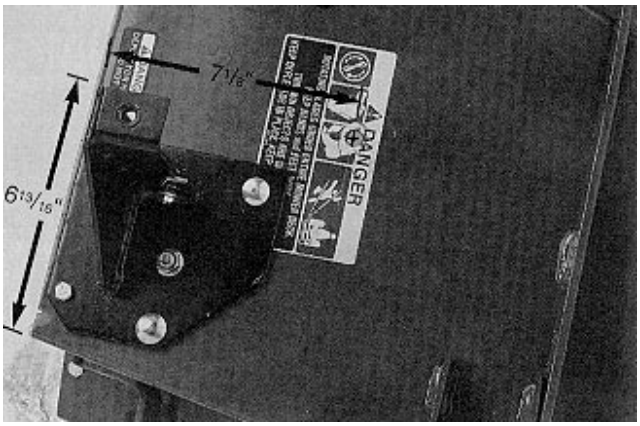

Figure 15

2. Using dimensions shown in figure 16, locate and drill 11/32" dia. hole in bridge bar.

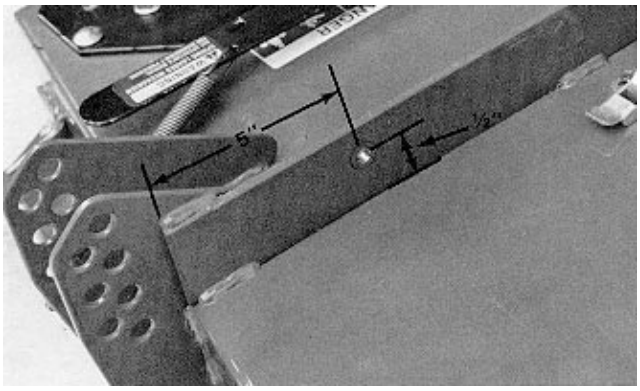

Figure 16

3. Thread a 5/16−18 flange nut onto threaded rod approximately 2" (Fig.17).

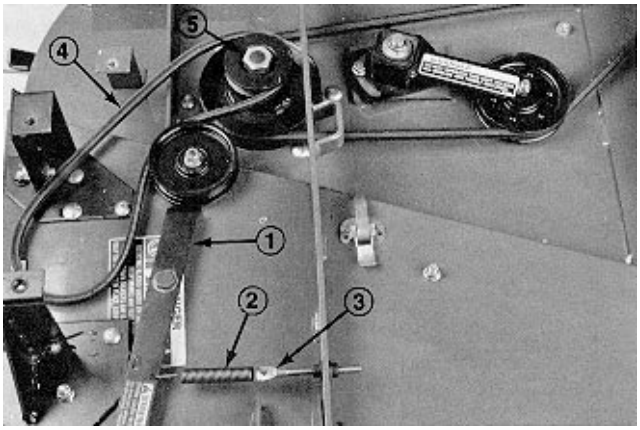

Figure 17
1. Idler pulley arm
2. Spring
3. Threaded rod
4. Belt
5. Small deck pulley

SET-UP INSTRUCTIONS

4. Insert end of threaded rod through hole in bridge bar and loosely secure with another 5/16−18 flange nut (Fig.17). Do not tighten flange nuts at this time. Adjust spring tension after blower assembly and belt have been installed.

5. Hook short loop of spring into hole in threaded rod and long loop in hole in idler arm (Fig.17).

6. Mount idler pulley arm to deck with the following parts, in this order: 3/8−16 pivot screw, 1/2" thrust washer, idler arm, bushing, 3/8" thrust washer, deck and 3/8−16 locknut (Fig. 18).

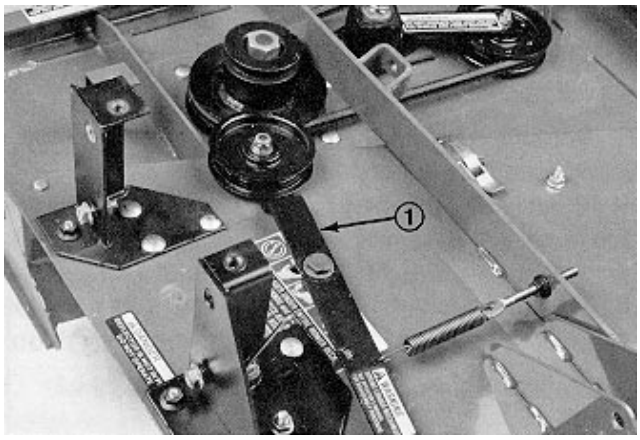

Figure 18
1. **Idler pulley arm**

MOUNT BLOWER

1. Route belt around small deck spindle pulley (Fig. 18).

2. Slide blower onto mounting bracket alignment studs (Fig. 19) while routing belt around blower pulley.

Note: If blower does not easily slide onto mounting brackets, loosen alignment bolts slightly.

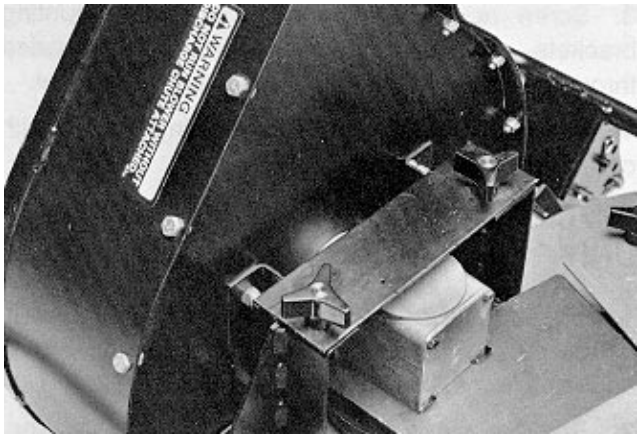

Figure 19

3. Secure blower to brackets with (2) knobs.

4. Adjust spring length to 4−7/8" for proper belt tension.

INSTALL BUMPER

1. Position bumper onto rear channel pins (Fig. 20)

2. Using bumper as a template, mark and drill (2) 13/32" dia. holes in rear channel (Fig. 21).

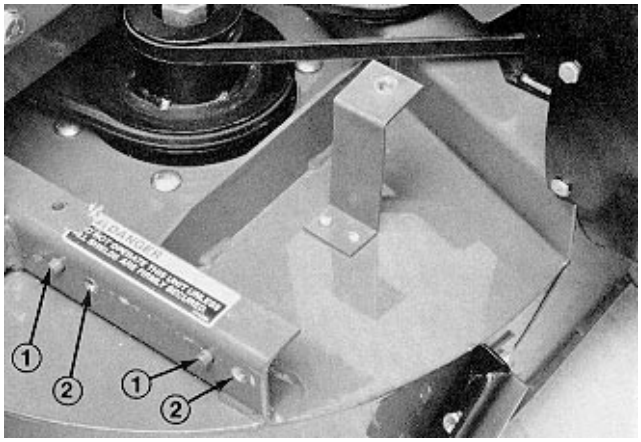

Figure 20
1. **Bracket pins**
2. **Drill two holes**

3. Loosely secure bumper to rear channel with (2) 3/8−16 x 5/8" lg. capscrews and locknuts (Fig. 21).

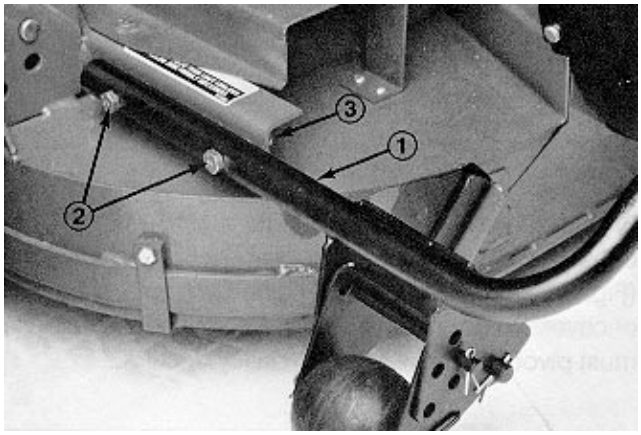

Figure 21
1. **Bumper**
2. **Capscrews**
3. **Locknuts**

4. Using front of bumper as a template along with dimension shown, locate, mark and drill (4) 11/32" dia. holes in front of deck (Fig. 22).

5. Secure front mounting of bumper to deck with (4) 5/16−18 x 5/8" lg. capscrews and locknuts (Fig. 22).

6. Tighten screws securing rear of bumper. Do not overtighten screws or tube may collapse.

SET-UP INSTRUCTIONS

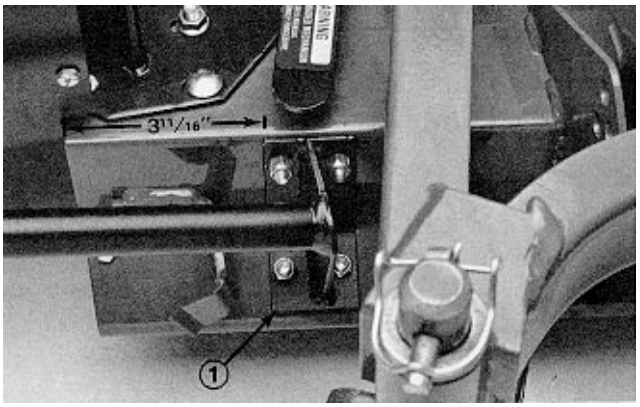

Figure 22
1. Front of bumper

INSTALL NEW DECK COVER

1. Using dimensions shown in figure 23, locate, mark and drill 11/32" dia. hole in rear channel.

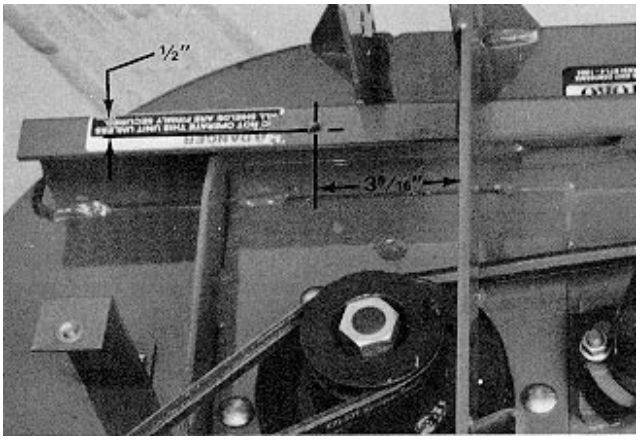

Figure 23

2. Install new deck cover with a 5/16−18 x 1" lg. capscrew, (2) 5/16 flat washers and a 5/16−18 locknut (Fig. 24). Washers to be positioned on top and bottom of cover. Do not over tighten capscrew because cover must pivot for easy access to pulley.

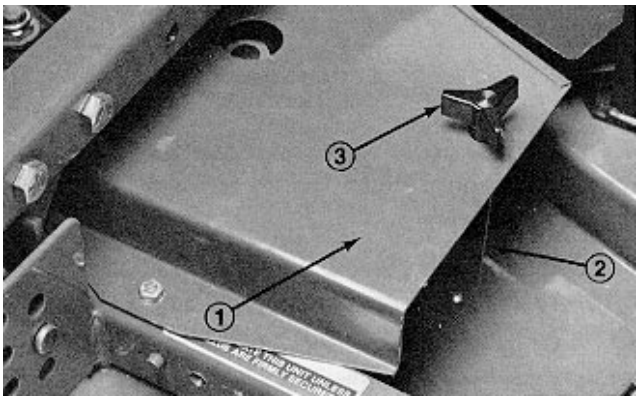

Figure 24
1. Cover
2. Cover support bracket
3. Knob

3. Secure cover to cover support with knob.

4. Using cover support bracket as a template, mark and drill (2) 7/32" dia. holes in top of deck (Fig. 24). Make sure surfaces are parallel before drilling.

5. Mount cover support to deck with (2) #10−24 x 5/8" lg. machine screws and #10 nuts, as shown in figure 24.

INSTALL NEW COUNTERBALANCE SPRING

To compensate for the additional weight of the blower assembly, the original light counterbalance spring at the right side of the machine, must be replaced with the heavier spring included (Fig. 25).

1. Remove hair pin cotter and clevis pin and slide spring assembly out of retaining bracket.

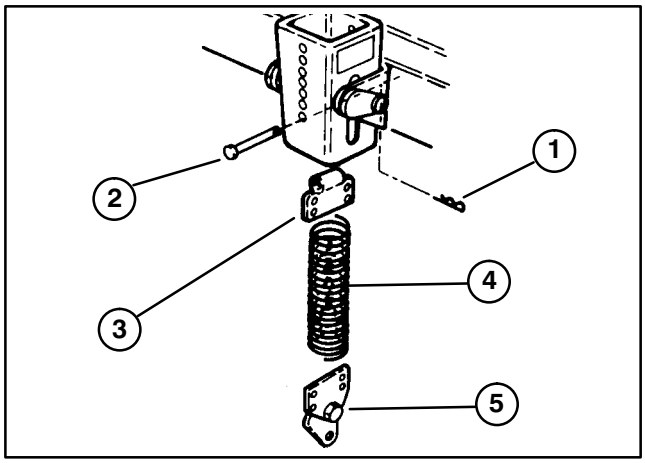

Figure 25
1. Hair pin cotter
2. Clevis pin
3. Top bracket
4. Spring
5. Bottom bracket

2. Screw spring off top and bottom mounting brackets.

3. Screw new heavy spring onto both mounting brackets. Assure spring is completely threaded through all holes and it contacts flat side of bracket.

4. Install spring assembly into retaining bracket with clevis pin and hair pin cotter.

INSTALL CUTTING UNIT TO TRACTION UNIT

1. Engage parking brake, assure traction pedal is in neutral and PTO lever is in OFF position. Start engine and raise frame. Stop engine.

2. Remove clevis pins and hairpin cotters from forward and rear height−of−cut brackets.

3. Position cutting unit under frame. Align gear case input shaft with PTO shaft and install the shaft.

SET-UP INSTRUCTIONS

4. Carefully lower carrier frame. Align PTO shaft hole with gear case input shaft hole and install roll pin.

Note: On Groundsmaster 223−D and 224, also tighten bolts and locknuts.

5. Install clevis pins through desired holes in frame and desired height−of−cut bracket holes. Secure clevis pins with hairpin cotters.

6. Start engine and raise frame. Secure counterbalance springs to cutting unit with shoulder bolts and locknuts.

INSTALL NEW DECAL

Install Danger Decal (Part No. 66−1340) on front edge of deck, inside carrier frame.

MOUNT BLOWER HOUSING CHUTE

IMPORTANT: When the chute in the Blower Kit is used with a 15 cubic foot Hopper Kit, you must cut off a section of the chute to assure proper fit between the blower and the hopper. If used with another kit, proceed to step 3.

1. Using dimensions shown in figure 26, use a tape measure and mark the chute.

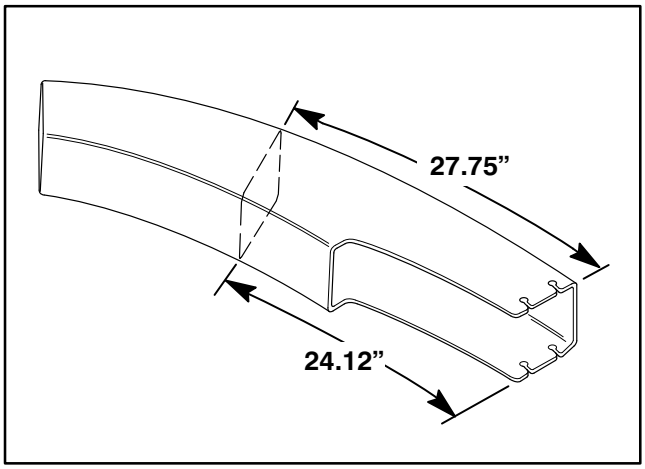

Figure 26

2. Draw lines around all sides of the chute and cut off with a saw.

Note: For convenience, some chutes have a light scribe mark where the chute must be cut off.

3. Set deck into desired height−of−cut setting.

4. Slide chute over blower opening and onto mounting studs (Fig. 27).

5. Lower hopper hood and align chute with hood snout. Secure chute in position with (4) 5/16 locknuts and chute brackets. Wide end of brackets to be positioned to rear.

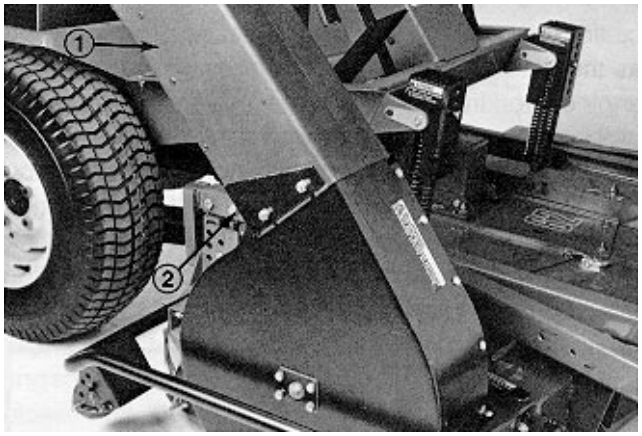

Figure 27
1. **Chute**
2. **Chute brackets**

OPERATING INSTRUCTIONS

OPERATING CHARACTERISTICS (When used with a 9 cu. ft. or 15 cu. ft. Hopper kit)

CAUTION

When grass collector is removed, NEVER operate without deflector in place.

For best performance, regulate traction pedal to keep engine rpm high and somewhat constant. A good rule to follow is: decrease ground speed as the load on the cutting blade increases; and increase ground speed as the load on the blade decreases. This allows the engine, working with the transmission, to sense the proper ground speed while maintaining high blade tip speed necessary for good quality−of−cut, vacuuming action, and to throw grass into hopper. If blower speed drops too low, plugging may result. Refer to Cutting Unit and Traction Unit Operator's Manual for operation of each.

DANGER

Never place hands or feet in chute, blower, or cutting unit.

1. This grass collector is designed for use in wet or dry conditions. Do not collect extremely long grass as the hopper will fill too quickly.

2. When bagging wet, heavy grass, some clippings may not be thrown completely through the chute. The hole in the bottom of the chute allows these clippings to drop out without plugging the chute. When this happens, reduce ground speed.

3. The bumper which protects the blower housing doesn't extend far enough to eliminate the chance of the bagger striking a stationary object. Stay far enough away from obstructions to avoid collisions. Trim with left side of cutting unit only.

CAUTION

Use care to avoid collision between hopper and any stationary objects. Always trim with left side of cutting unit.

4. While operating, check frequently for excessive clippings left on turf or uncut grass. If those conditions occur, the blower or cutting unit may be plugged. Stop unit, disengage PTO, set brake and shut off ignition. Check for obstructions in the chute, blower or cutting unit. Clear any obstruction using a stick or similar tool. Check blower belt tension. If slipping, readjust.

5. Cut grass often, especially when it grows rapidly. If shorter turf is desired, cut the grass again. Overlap the swaths to produce an even cutting pattern.

IMPORTANT: When transporting unit, tie down grass collector hood or back it onto truck or trailer to avoid wind throwing hood open and damaging it.

ROLLER ADJUSTMENT

1. Position deck on a smooth level surface.

2. Adjust deck to desired height−of−cut.

3. Loosen nuts and bolts securing roller bracket to bumper (Fig. 28).

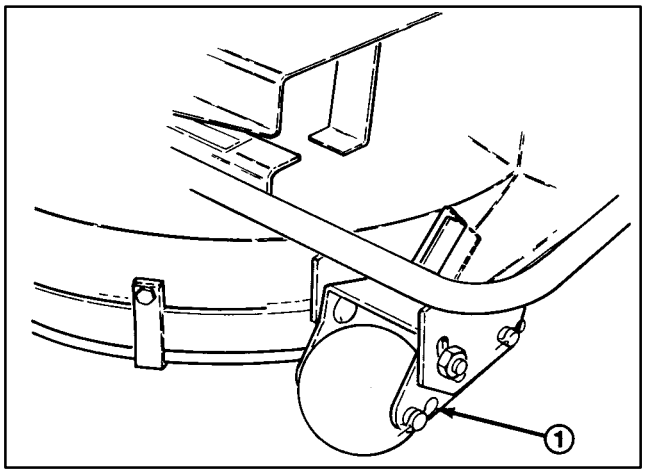

Figure 28
1. Roller

BLOWER REMOVAL

1. Shut engine off, disengage idler, unlatch and open belt cover and lift belt off spindle pulley. Close cover. Remove (2) knobs securing blower to mounting brackets and remove blower, belt and chute.

2. Reverse procedure to reinstall blower assembly.

USING GRASS DEFLECTOR

At some time you may wish to operate cutting deck without the blower. Since a new pivot should have already been installed on the grass deflector (see Remove / Modify Grass Deflector, page 6), you can quickly mount the deflector to the blower mounting brackets.

1. Remove bumper from deck.

2. Slide slots at bottom of deflector pivot bracket onto shoulder bolt at side of deck brackets (Fig. 29).

3. Secure deflector in place with (2) knobs (Fig. 29).

OPERATING INSTRUCTIONS

CAUTION

When grass collector is removed, NEVER operate without deflector in place.

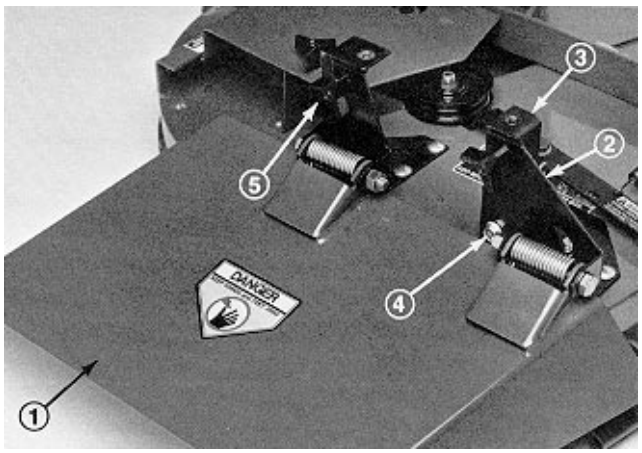

Figure 29

1. **Grass deflector**
2. **Pivot bracket**
3. **Deck bracket**
4. **Shoulder bolt**
5. **Knob**

MAINTENANCE

1. Keep unit clean. Assure engine is free of dirt and chaff. Make sure all fasteners are tight. Check deflectors, baffles and shields for wear and replace as needed.

2. Check blower gearbox impeller for tightness every 50 hours. Torque impeller shaft bolt to 220−230 in.−lbs.

3. Clean grass clippings from hood, chute, blower and cutting unit after each use. Wash underside of cutting unit daily with hose. An excessive buildup of clippings will impair collection system performance.

4. Check belt tension and wear every 50 hours. To adjust belt tension, loosen idler mounting screws, engage idler lever and push idler pulley firmly into blower belt. Tighten mounting screws.

5. The blower gear box should need little maintenance. Check for leakage every 50 hours. If leakage should occur, replace seals and refill with 2 oz. of high quality moly di−sulfide grease. Repack bearings with this grease before assembling.

6. Refer to Cutting Unit and Traction Unit Operator's Manuals for service requirements of each.

NOTES

NOTES

The Toro Promise

A One Year Limited Warranty

The Toro Company promises to repair your TORO product if defective in materials or workmanship. The following time periods from the date of purchase apply:

Commercial Products ..... 1 Year

The cost of parts and labor are included, but the customer pays the transportation costs on walk rotary mowers with cutting unit widths of less than 25".

If you feel your TORO Product is defective and wish to rely on The Toro Promise, the following procedure is recommended:

1. Contact your Authorized TORO Distributor or Commercial Dealer (the Yellow Pages of your telephone directory is a good reference source).

2. The TORO Distributor or Commercial Dealer will advise you on the arrangements that can be made to inspect and repair your product.

3. The TORO Distributor or Commercial Dealer will inspect the product and advise you whether the product is defective and, if so, make all repairs necessary to correct the defect without an extra charge to you.

If for any reason you are dissatisfied with the distributor's analysis of the defect or the service performed, you may contact us.

Write:

TORO Commercial Products Service Department
8111 Lyndale Avenue South
Minneapolis, MN 55420

The above remedy of product defects through repair by an Authorized TORO Distributor or Commercial Dealer is the purchaser's sole remedy for any defect.

THERE IS NO OTHER EXPRESS WARRANTY. ALL IMPLIED WARRANTIES OF MERCHANTIBILITY AND FITNESS FOR USE ARE LIMITED TO THE DURATION OF THE EXPRESS WARRANTY.

Some states do not allow limitations on how long an implied warranty lasts, so the above limitation may not apply to you.

This Warranty applies only to parts or components which are defective and does not cover repairs necessary due to normal wear, misuse, accidents, or lack of proper maintenance. Regular, routine maintenance of the unit to keep it in proper operating condition is the responsibility of the owner.

All warranty repairs reimbursable under The Toro Promise must be performed by an Authorized Toro Commercial Dealer or Distributor using Toro approved replacement parts.

Repairs or attempted repairs by anyone other than an Authorized TORO Distributor or Commercial Dealer are not reimbursable under the TORO Promise. In addition, these unauthorized repair attempts may result in additional malfunctions, the correction of which is not covered by warranty.

THE TORO COMPANY IS NOT LIABLE FOR INDIRECT, INCIDENTAL OR CONSEQUENTIAL DAMAGES IN CONNECTION WITH THE USE OF THE PRODUCT INCLUDING ANY COST OR EXPENSE OF PROVIDING SUBSTITUTE EQUIPMENT OR SERVICE DURING PERIODS OF MALFUNCTION OR NON–USE.

Some states do not allow the exclusion of incidental or consequential damages, so the above exclusion may not apply to you.

This warranty gives you specific legal rights, and you may also have other rights which vary from state to state.

COUNTRIES OTHER THAN THE UNITED STATES OR CANADA

Customers who have purchased TORO products exported from the United States or Canada should contact their TORO Distributor (Dealer) to obtain guarantee policies for your country, province, or state. If for any reason you are dissatisfied with your Distributor's service or have difficulty obtaining guarantee information, contact the TORO importer. If all other remedies fail, you may contact us at The Toro Company.

Compliance with Radio Interference Regulations Certified.