Form No. 3395-107 Rev A

27-inch or 32-inch Rear Roller Brush Kit

Reelmaster® 3100-D and 7000-D Series DPA Cutting Unit

Model No. 03186

Model No. 03187

Installation Instructions

Introduction

⚠ WARNING

CALIFORNIA
Proposition 65 Warning

This product contains a chemical or chemicals known to the State of California to cause cancer, birth defects, or reproductive harm.

This product complies with all relevant European directives. For details, please see the Declaration of Incorporation (DOI) at the back of this publication.

Contents

Introduction 1
Safety 1
Safe Operating Practices 1
Setup 2
1 Gathering the Appropriate Tools 2
2 Determining the Orientation of the Roller Brushes 3
3 Repositioning the Idler Pulley Assembly 3
4 Removing the Brush Cover Drain Plug 4
5 Installing the Roller Brush 4
6 Installing the High Height-of-Cut Brush (Optional) 9
Maintenance 10
Aligning the Pulleys 10

Safety

Safe Operating Practices

- Read, understand, and follow all instructions in the traction-unit and cutting-unit operator manuals before operating the cutting unit.
- Read, understand, and follow all instructions in this operator's manual before operating the brush kit.
- Never allow children to operate the cutting units. Do not allow adults to operate the traction unit or the cutting units without proper instruction. Only trained operators who have read this manual should operate the cutting units.
- Never operate the cutting units when under the influence of drugs or alcohol.
- Keep all shields and safety devices in place. If a shield, safety device, or decal is illegible or damaged, repair or replace it before operation is commenced. Also tighten any loose nuts, bolts, and screws to ensure that the cutting unit is in safe operating condition.
- Always wear substantial, slip-resistant shoes. Do not operate the cutting unit while wearing sandals, tennis shoes, sneakers, or shorts. Also, do not wear loose-fitting clothing which could get caught in moving parts. Always wear long pants. Wearing safety glasses, safety shoes, and a helmet is advisable and required by some local ordinances and insurance regulations.
- Remove all debris or other objects that might be picked up and thrown by the cutting-unit blades. Keep all bystanders away from the mowing area.
- If the blades strike a solid object or the cutting unit vibrates abnormally, stop and shut the engine off. Check the cutting unit for damaged parts. Repair any damage before starting and operating the cutting unit.
- Lower the cutting units to the ground and remove the key from the ignition switch whenever the machine is left unattended.
- Be sure that the cutting units and the brushes are in safe operating condition by keeping the nuts, bolts, and screws tight.
- Remove the key from the ignition switch to prevent accidental starting of the engine when servicing, adjusting, or storing the machine.
- Lightning can cause severe injury or death. If lightning is seen or thunder is heard in the area, do not operate the machine; seek shelter.
- Perform only those maintenance instructions described in this manual. If major repairs are ever needed or assistance is desired, contact an Authorized Toro Distributor.
- To ensure optimum performance and continued safety certification of the machine, use only genuine Toro replacement parts and accessories. Replacement parts and accessories made by other manufacturers could be dangerous, and such use could void the product warranty.

© 2015—The Toro® Company
8111 Lyndale Avenue South
Bloomington, MN 55420

Register at www.Toro.com.

CE

Original Instructions (EN)
Printed in the USA
All Rights Reserved

3395-107 A

Installation

Loose Parts

Use the chart below to verify that all parts have been shipped.

Procedure	Description	Qty.	Use
1	No parts required	–	Gather the appropriate tools.
2	No parts required	–	Determine the position of the roller brushes and reel motors.
3	No parts required	–	Reposition the idler pulley assembly.
4	No parts required	–	Remove the brush cover drain plug.
5	Roller-brush housing Allen-head bolt, 3/8 x 1 inch Roller-brush assembly Shoulder bolt Belt cover/plate assembly Bolt, 5/16 x 5/8 inch Spacer Drive pulley Flange-head bolt, 3/8 x 2 inches Belt Shim washer (as required)	1 2 1 1 1 2 1 1 1 1 1	Install the roller brush.
6	High height of cut brush (optional)	–	Install the high height-of-cut brush.

Media and Additional Parts

Description	Qty.	Use
Operator's Manual	1	Read before installing and operating.
Parts Catalog	1	Use to look up replacement parts.

Note: Determine the left and right sides of the cutting unit from behind the cutting unit.

Important: The Rear Roller Brush Kit is only to be used when cutting in the height of cut range of 6 to 25 mm (1/4 to 1 inch). Use the High Height of Cut Brush, Part 115-0838 (for 27 inch cutting units) and 115-0849 (for 32 inch cutting units) when cutting above 2.5 to 5.1 cm (1 to 2 inches). Refer to Installing the High Height of Cut Brush.

Rear Roller Brush Kit Model 03186 may be used on the following:

- Reelmaster 3100 Cutting Unit Models 03180, 03181, and 03183 with the 27-inch Lift Arm Kit, Model 03172
- Reelmaster 7000 Cutting Unit Models 03710 and 03711

Rear Roller Brush Kit Model 03187 may be used on the following:

- Reelmaster 3100 Cutting Unit Model 03182 with the 32-inch Lift Arm Kit, Model 03173
- Reelmaster 7000 Cutting Unit Model 03712

1

Gathering the Appropriate Tools

No Parts Required

Procedure

Acquire the following tools before proceeding with the installation:

- 1/2 deep-well socket
- 9/16 socket
- 5/8 socket
- 1/2 wrench
- 9/16 wrench
- 1/8 Allen wrench
- 5/16 Allen wrench
- 3/8-16 tap
- 12 inch straight edge (Toro Part 114-5446)
- Torque wrench (foot-pound)
- Torque wrench (inch-pound)
- Blue 242 Loctite

2

Determining the Orientation of the Roller Brushes

No Parts Required

Procedure

All cutting units are shipped with the counterweight mounted to the left end of the cutting unit. Use the Figure 1 to determine the position of the roller brushes and reel motors for Reelmaster 3100-D or Figure 2 for Reelmaster 7000-D.

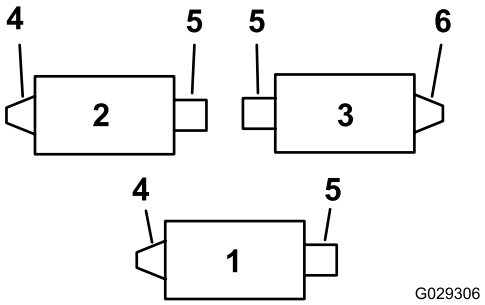

Figure 1

Reelmaster 3100-D

1. #1 cutting unit
2. #2 cutting unit
3. #3 cutting unit
4. Left-hand roller brush drive assembly
5. Reel motor
6. Right-hand roller brush drive assembly

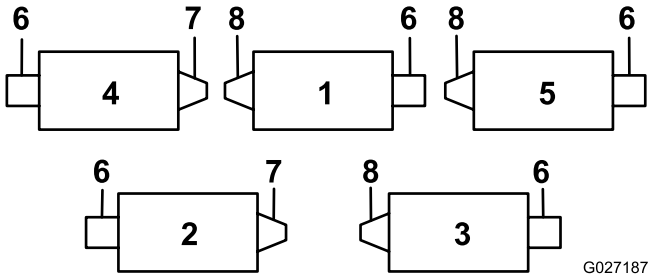

Figure 2

Reelmaster 7000-D

1. #1 cutting unit
2. #2 cutting unit
3. #3 cutting unit
4. #4 cutting unit
5. #5 cutting unit
6. Reel motor
7. Right-hand roller brush drive assembly
8. Left-hand roller brush drive assembly

Note: These instructions and illustrations show the installation of the kit on cutting units with the end weights mounted on the left end of the cutting unit.

3

Repositioning the Idler Pulley Assembly

No Parts Required

Procedure

On the left front and left rear cutting units, reverse the idler pulley assembly to mount on the **right end** of the cutting unit (Figure 3), as follows:

1. Remove the idler pulley assembly from the left end of the cutting unit and mount it to the lower hole in the brush plate on the right end of the cutting unit (Figure 3).

   Note: The idler pulley must pivot freely; do not over tighten the locknut on the idler pivot bolt.

2. Remove the carriage bolt and nut and relocate them to the upper hole previously occupied by the idler pulley assembly (Figure 3).

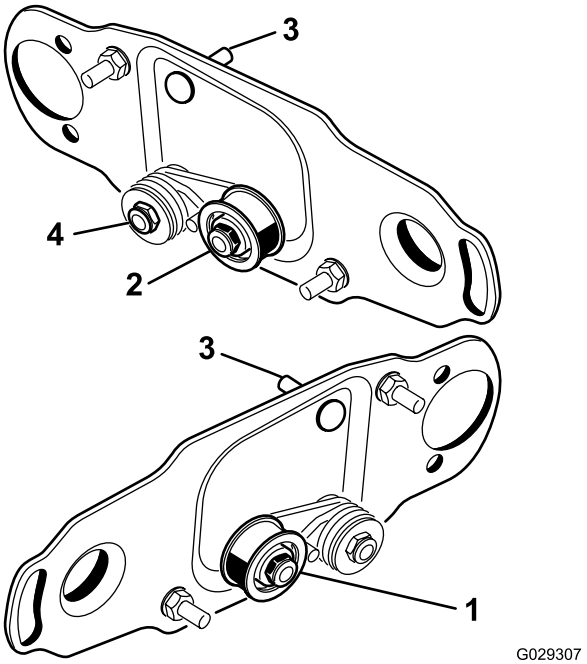

Figure 3

1. Idler pulley installation for left end of reel
2. Idler pulley installation for right end of reel
3. Carriage bolt and nut
4. Do not overtighten this locknut.

4

Removing the Brush Cover Drain Plug

No Parts Required

Procedure

Remove only the bottom drain plug (Figure 4) from the brush covers. This allows moisture to drain from the belt area.

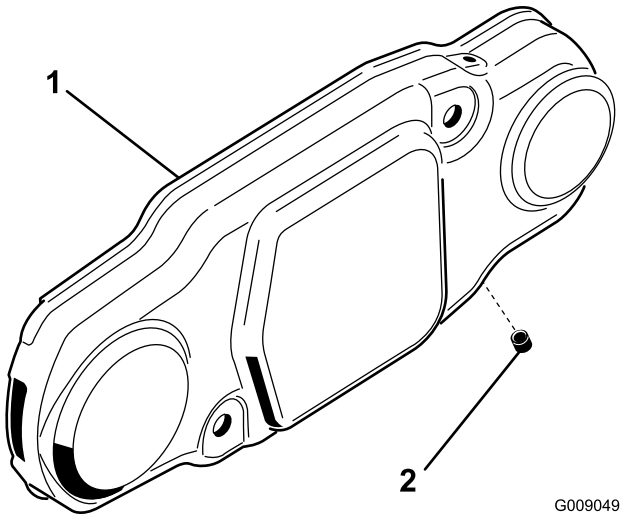

Figure 4

1. Brush cover
2. Bottom drain plug

5

Installing the Roller Brush

Parts needed for this procedure:

1	Roller-brush housing
2	Allen-head bolt, 3/8 x 1 inch
1	Roller-brush assembly
1	Shoulder bolt
1	Belt cover/plate assembly
2	Bolt, 5/16 x 5/8 inch
1	Spacer
1	Drive pulley
1	Flange-head bolt, 3/8 x 2 inches
1	Belt
1	Shim washer (as required)

Procedure

1. Park the traction unit on a level surface and engage the parking brake.
2. Ensure that the cutting units are disengaged. Turn the engine off and remove the key. Remove all cutting units from the traction unit.

   Important: Check the cutting unit for the desired height of cut and attitude. Reset it according to the *Operator's Manual*, if required, before installing the Rear Roller Brush Kit.

3. Remove the 2 bolts securing the counterweight to the left end of the cutting unit. Remove the counterweight (Figure 5).

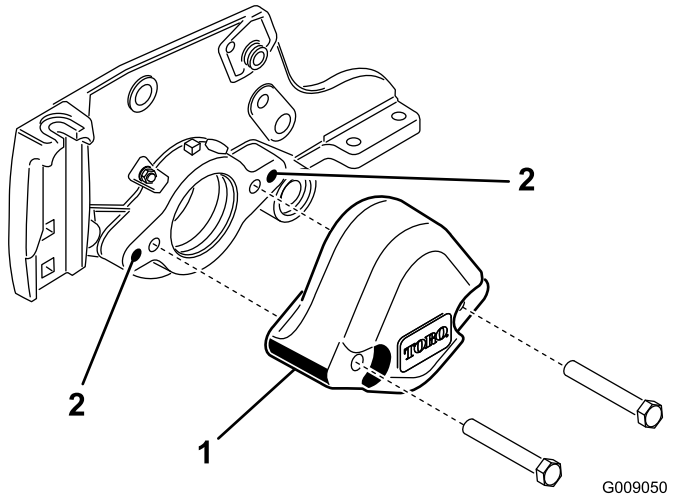

Figure 5

1. Counterweight
2. Clean out these mounting holes.

4. Using a 3/8-16 tap, remove the paint in the outer mounting holes in the side-plate (Figure 5).
5. Mount the roller-brush housing to the reel-bearing housing with 2 Allen-head bolts (3/8 x 1 inch) (Figure 6). Position the roller-brush housing so that the threaded hole is toward the front of the cutting unit.

   Note: Make sure that the O-ring is properly positioned in the roller-brush housing.

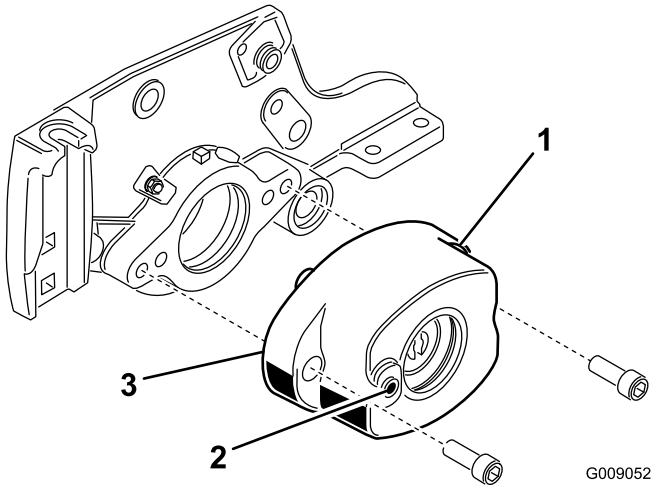

Figure 6

1. Roller-brush housing
2. Threaded hole in housing
3. O-ring

6. Remove the 2 flange locknuts securing each roller bracket to the side-plates (Figure 7). Do not remove the bolts. **Also, remove any 6 mm (1/4 inch) spacers from the top side of the side-plate mounting flange.**

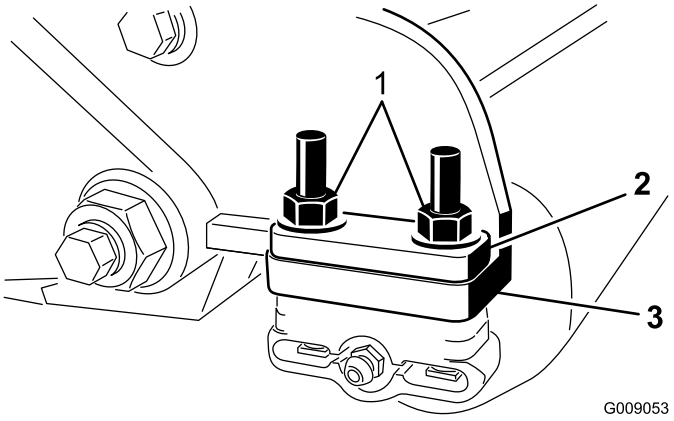

Figure 7

1. Remove the nuts securing each end of the roller.
2. 6 mm (1/4 inch) spacer
3. Side-plate mounting flange

7. Position the roller-brush mounting brackets onto the roller-bracket bolts (Figure 8).

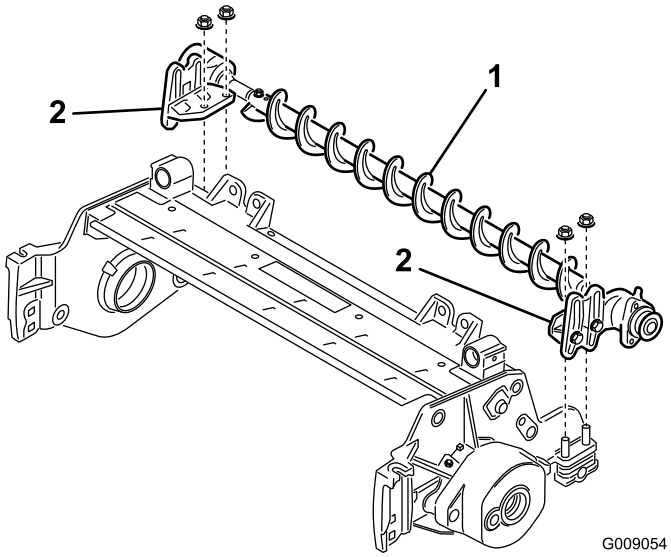

Figure 8

1. Roller brush assembly
2. Roller-brush mounting bracket

Important: **The roller-brush mounting brackets must be mounted directly to the top surface of the cutting-unit side-plate mounting flange. *Do not put spacers between the roller-brush mounting brackets and the side-plate mounting flanges.* Install additional 6 mm (1/4 inch) spacers on the top side of the roller-brush mounting bracket (Figure 9).**

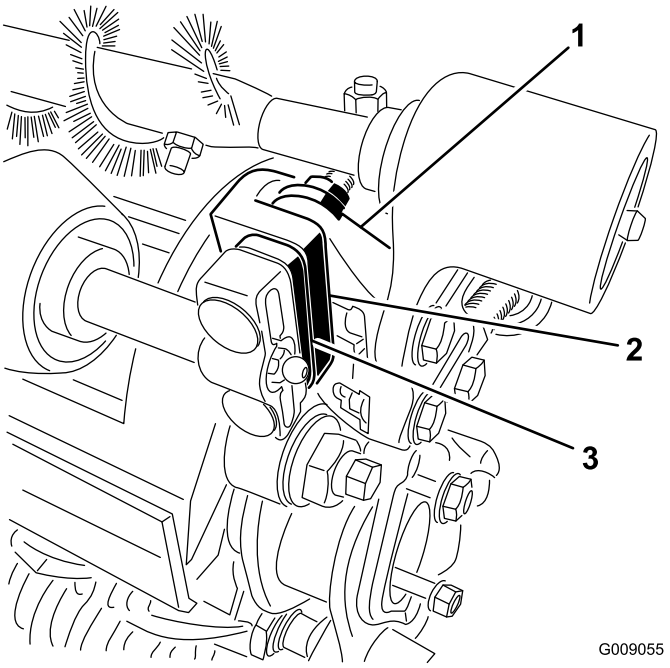

Figure 9

1. Roller-brush mounting bracket
2. Cutting-unit side-plate mounting flange
3. Extra 6 mm (1/4 inch) spacer

8. Secure the roller-brush mounting brackets to the cutting-unit side-plates with the nuts previously removed.
9. Slide each excluder seal outward until the lip seals are in light contact with each bearing housing (Figure 10).

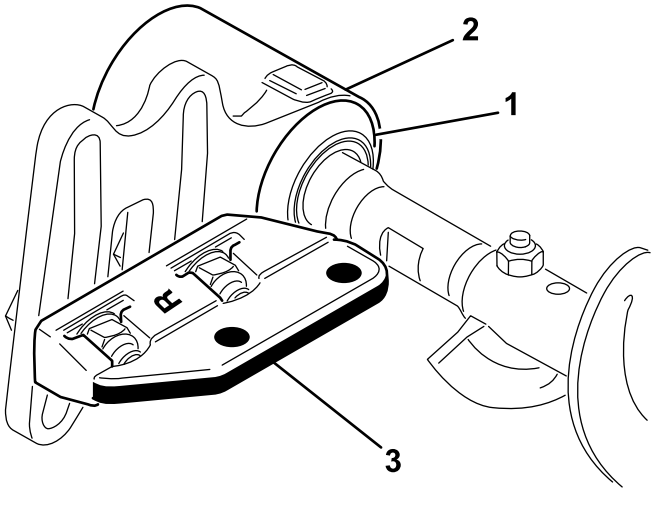

Figure 10

1. Excluder seal
2. Bearing housing
3. Mounting bracket

10. Apply a coating of grease to the inner diameter of the grommet in the bearing housing (Figure 11).

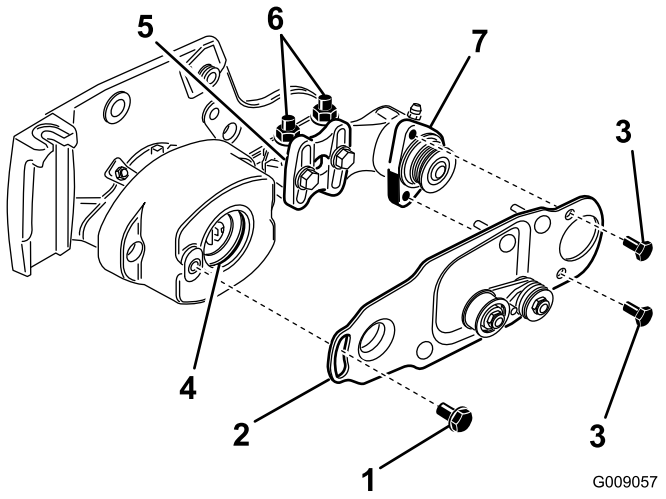

Figure 11

1. Shoulder bolt
2. Brush plate
3. Bolt
4. Grommet in bearing housing
5. Roller-brush mounting bracket
6. Flange locknuts
7. Roller-brush-bearing housing

11. Loosen, but do not remove, the bolts securing the roller-brush-bearing housing to the roller-brush mounting bracket (Figure 11).
12. Install the roller-brush pivot plate (Figure 11).

    Note: When you insert the protrusion on the pivot plate into the grommet in the bearing housing, ensure that the grommet stays properly seated in the housing.

    Note: The roller-brush pivot plate is properly seated when there is no resistance from the rubber grommet and it pivots freely.
13. Apply 242 Loctite (blue) to the 2 bolts (5/16 x 5/8 inch) and use them to mount the brush plate to the roller-brush-bearing housing (Figure 11).

    Note: Torque the bolts to 20 to 25 N-m (15 to 19 ft-lb).
14. Check to make sure that the roller-brush plate is parallel to the cutting-unit side-plate. If it is not parallel, proceed as follows:
    - Loosen the 2 flange locknuts securing the roller-brush mounting bracket to the cutting unit side-plate (Figure 11).
    - Rotate the roller-brush-bearing housing until the brush plate is parallel to the cutting-unit side-plate (Figure 11).
    - Tighten the 2 flange locknuts securing the roller-brush mounting bracket to the cutting-unit side-plate (Figure 11).
15. Loosen the 2 bolts securing each roller-brush-bearing housing to the roller-brush mounting bracket (Figure 12 and Figure 13).

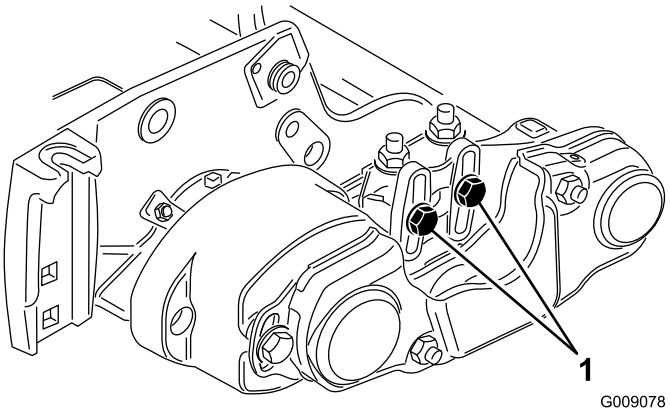

Figure 12

1. Loosen these bolts.

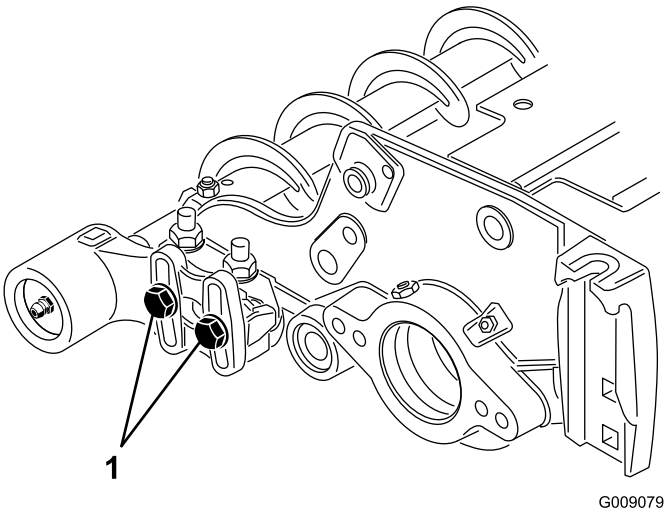

Figure 13

1. Loosen these bolts.

16. Position the roller brush so that it just touches the rear roller (Figure 14).

Important: The roller-brush shaft must not contact the cutting-unit side-plate.

Important: Heavy brush contact on the roller causes premature brush wear.

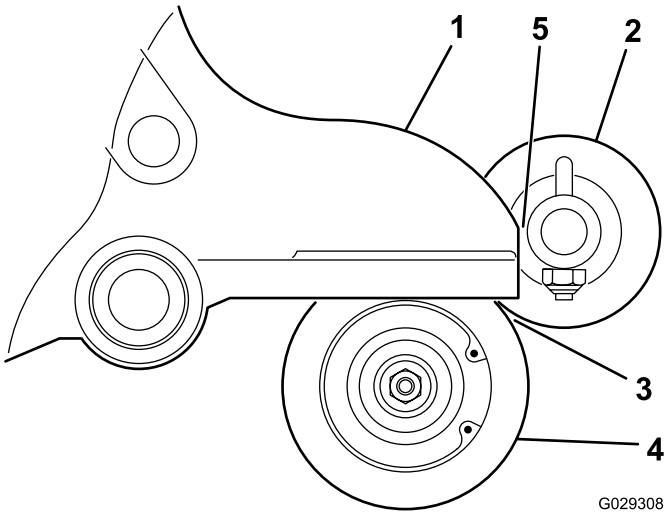

Figure 14

1. Side-plate
2. Roller brush
3. Light contact
4. Rear roller
5. Ensure that there is clearance here.

Note: The roller brush shaft must be parallel to the rear roller.

Note: The orientation of the non-drive roller-brush-bearing housing should be the same as drive-side bearing housing.

17. Tighten the 2 bolts securing each roller-brush-bearing housing to the roller-brush mounting brackets.
18. Apply 242 Loctite (blue) to the shoulder bolt (Figure 11). Secure the brush plate to the roller-brush housing with the shoulder bolt. (Figure 11).

Note: Torque the bolt to 20 to 25 N-m (15 to 19 ft-lb).

Note: The shoulder bolt should not clamp the plate to the housing.

19. Install the spacer onto the shaft in the bearing housing (Figure 15).
20. Insert the drive pulley into the spacer and onto the driveshaft (Figure 15). Make sure that the pulley tabs are positioned in the slot in the drive shaft.
21. Secure the pulley and spacer to the driveshaft with a flange-head bolt (3/8 x 2 inch) (Figure 15).

Note: Torque the bolt to 47 to 54 N-m (35 to 40 ft-lb).

Important: If the bolt is *not* properly torqued, *the bolt will come loose.*

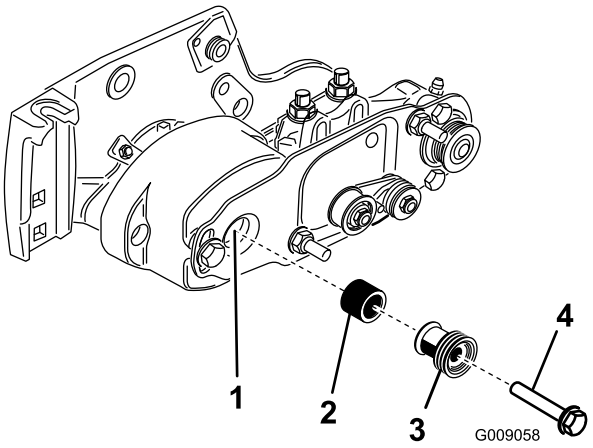

Figure 15

1. Driveshaft
2. Spacer
3. Drive pulley
4. Bolt—torque to 47 to 54 N-m (35 to 40 ft-lb)

22. Install the belt onto the pulleys as follows:
    - Loop the belt around the **driven** pulley and then over the top of the idler pulley (Figure 16).

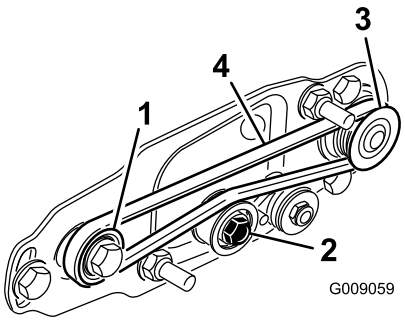

Figure 16

1. Drive pulley
2. Idler-pulley assembly
3. Driven pulley
4. Belt

    - Start the belt on the **drive** pulley (Figure 16).
    - While guiding the belt onto the **drive** pulley, rotate the reel forward to draw the belt onto the drive pulley.

      Note: Wear a padded glove or use a heavy rag to rotate the reel.

    Important: Make sure that the ribs on the belt are properly seated in the grooves in each pulley. Also, make sure that the belt is in the center of the idler pulley.

23. Push down on the idler pulley to ensure that the idler pulley assembly pivots freely.
24. Check the alignment of the belt/pulleys as follows:
    - The belt must be properly tensioned (installed) prior to checking alignment.
    - Lay a straightedge along the outer face of the **drive** pulley (Figure 17). **Do not** lay the straightedge across both the drive and driven pulleys.
    - The outer faces of the drive and driven pulleys should be in line within 0.76 mm (0.030 inch).
    - If the pulleys are not aligned, Refer to Aligning the Pulleys (page 10).
    - If the pulleys are aligned, continue with the installation.
    - **Do not** use the idler pulley to check alignment.

    Important: The belt may fail prematurely if the pulleys are not properly aligned.

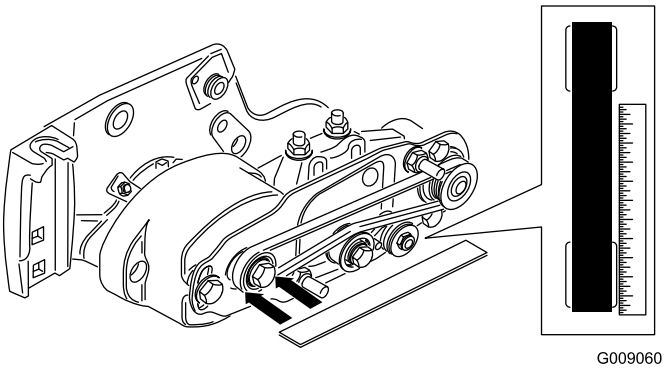

Figure 17

25. Slide the belt cover onto the mounting bolts and secure with 2 flange nuts (Figure 18).

    Important: Do not overtighten the flange nuts, as damage to the cover may occur.

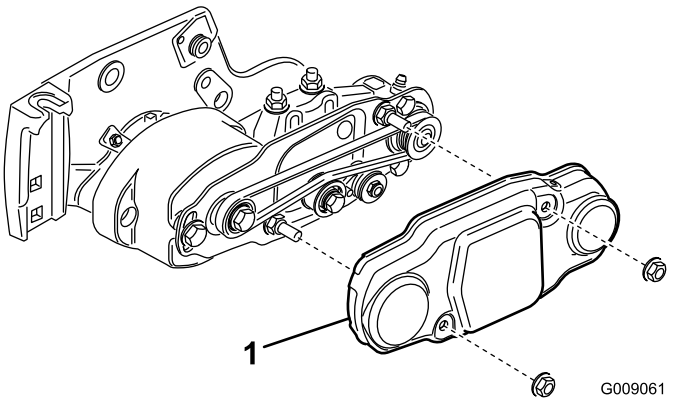

Figure 18

1. Belt cover

26. Lubricate the grease fittings on each of the roller-brush-bearing housings and on the remainder of the cutting unit with #2 general-purpose lithium-based grease (Figure 19).

    Note: Wipe off any excess grease, specifically around the excluder seals.

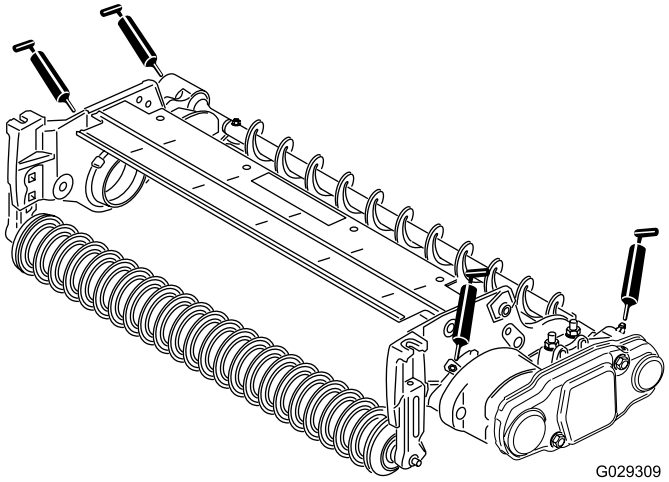

Figure 19

6

Installing the High Height-of-Cut Brush (Optional)

Parts needed for this procedure:

–	High height of cut brush (optional)

Procedure

Install the high height-of-cut brush, Part 115-0838 (for 27 inch cutting units) and 115-0849 (for 32 inch cutting units) when cutting from 2.5 to 5.1 cm (1 to 2 inches) height of cut (7 maximum spacers installed below the side plate pad).

1. If a roller brush is installed on the cutting unit, remove the 2 bolts, washers and nuts securing the non-drive-bearing housing to the bearing-housing mounting bracket (Figure 20 and Figure 21).

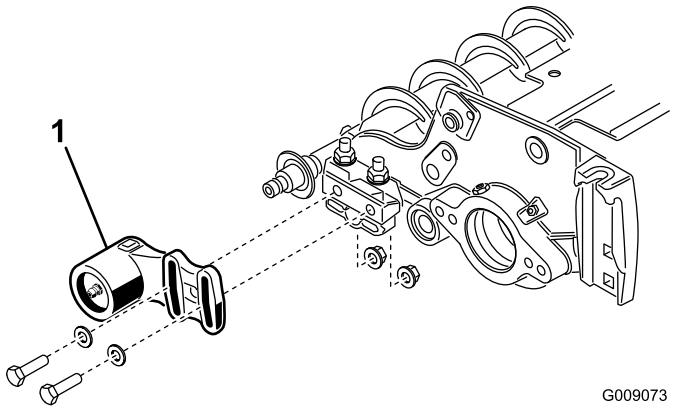

Figure 20

1. Non-drive-bearing housing

2. Slide the non-drive-bearing housing and the excluder seal off the brush shaft (Figure 21).

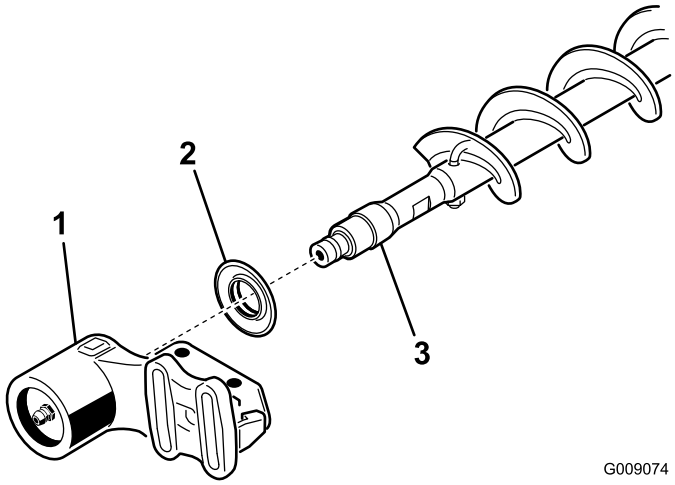

Figure 21

1. Non-drive-bearing housing
2. Excluder seal
3. Brush shaft

3. Remove the 2 J-bolts and nuts (Figure 22).

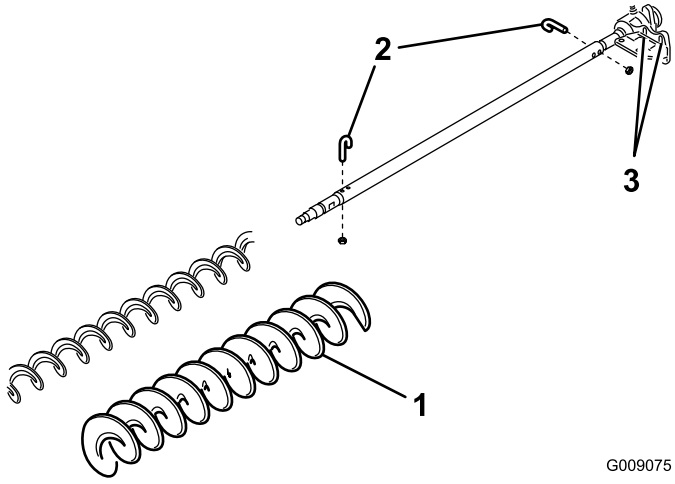

Figure 22

1. High height-of-cut brush
2. J-bolt
3. Loosen these bolts

4. Slide the existing brush off the brush shaft (Figure 22).
5. Loosen the 2 bolts, washers, and nuts securing the drive-bearing housing to the bearing-housing mounting bracket (Figure 22).
6. Slide the high height-of-cut brush onto the brush shaft (Figure 22).
7. Clamp the brush onto the shaft with the 2 J-bolts and nuts previously removed (Figure 22).

Important: Insert the threaded end of the J-bolts thru the outer holes of the brush shaft while hooking the curved ends of the J-bolts into the inner holes.

8. Torque the J-bolt locknuts to 2 to 3 N-m (20 to 25 in-lb).
9. Install the excluder seal and the non-drive-bearing housing onto the brush shaft (Figure 21).
10. Mount the non-drive-bearing housing to the bearing-housing mounting bracket with the 2 bolts, washers, and nuts previously removed.

    Note: Be careful not to knock the seal spring off.
11. Tighten the 2 bolts, washers, and nuts securing the drive-bearing housing to the bearing-housing mounting bracket.

Maintenance

1. Make sure that the brush is parallel to the roller with 1.5 mm (0.060 inch) clearance to light contact.
2. Grease the fittings every 50 hours and after every washing.
3. When replacing roller brush, torque the J-bolts to 2 to 3 N-m (20 to 25 in-lb).
4. When replacing the brush-shaft-driven pulley, torque the nut to 36 to 45 N-m (27 to 33 ft-lb).
5. When replacing the brush-drive pulley, torque the bolt to 47 to 54 N-m (35 to 40 ft-lb).

   Important: Backlapping at the incorrect reel speed may loosen and strip the drive-pulley threads. Refer to the Cutting Unit Operator's Manual for the backlapping procedure.
6. The roller brush, idler bearing, and belt are considered consumable items.

Aligning the Pulleys

1. The driven pulley (at the roller-brush shaft) can move in or out (Figure 23).

   Note: Make note of which way the pulley needs to move.

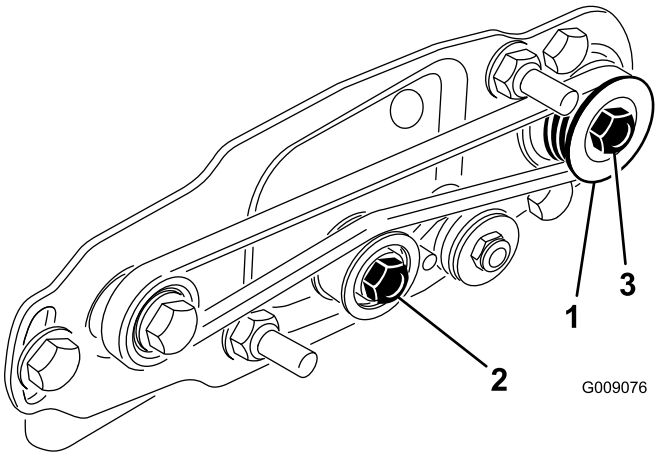

Figure 23

1. Driven pulley
2. Idler pulley
3. Driven-pulley nut

2. While rotating the reel, which rotates the drive pulley, pry the belt off the drive pulley (Figure 23).

   Note: Wear a padded glove or use a heavy rag to rotate the reel.
3. Remove the locknut securing the driven pulley to the brush shaft (Figure 23 or Figure 24).

   Note: Put a 1/2-inch wrench on the flats of the roller-brush shaft to keep it from rotating.
4. Remove the driven pulley from the shaft (Figure 24).
5. If the pulley needs to move out, add one 0.8 mm (0.032 inch) thick spacer (Figure 24). If the pulley needs to move in, remove the existing 0.8 mm (0.032 inch) thick spacer.
6. Install the pulley.

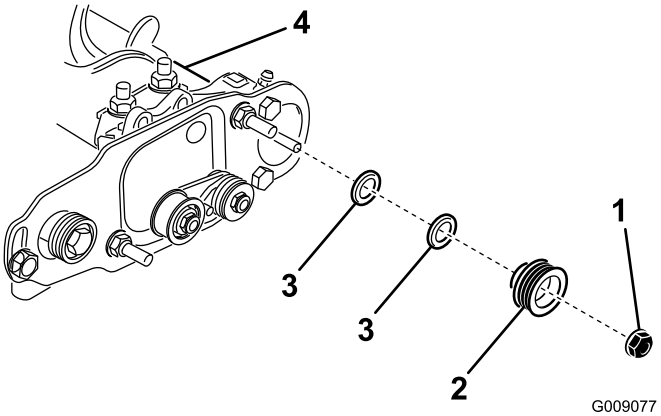

Figure 24

1. Lock nut
2. Driven pulley
3. Spacer (0.032 inch (0.8 mm) thick)
4. Brush-shaft flats

7. While holding the flats of the roller-brush shaft, secure the pulley on the shaft with the 3/8-16 flange nut previously removed.

Note: Seat the locknut, then torque it to 36 to 45 N-m (27 to 33 ft-lb).

8. Install the belt onto the pulleys as follows:

   - Loop the belt around the **driven** pulley and then over the top of the idler pulley (Figure 25).

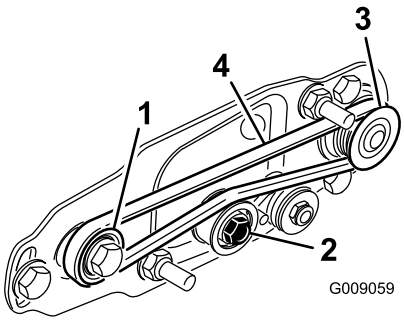

Figure 25

1. Drive pulley
2. Idler-pulley assembly
3. Driven pulley
4. Belt

   - Start the belt on the **drive** pulley (Figure 25).
   - While guiding the belt onto the **drive** pulley, rotate the reel forward to draw the belt onto the drive pulley.

     Note: Wear a padded glove or use a heavy rag to rotate the reel.

   Important: Make sure that the ribs on the belt are properly seated in the grooves in each pulley. Also, make sure that the belt is in the center of the idler pulley.

9. Check the pulley alignment and adjust it if required.

Declaration of Incorporation

The Toro Company, 8111 Lyndale Ave. South, Bloomington, MN, USA declares that the following unit(s) conform(s) to the directives listed, when installed in accordance with the accompanying instructions onto certain Toro models as indicated on the relevant Declarations of Conformity.

Model No.	Serial No.	Product Description	Invoice Description	General Description	Directive
03186	—	27-inch Rear Roller Brush Kit	RM 3100 27" REAR ROLLER BRUSH KIT	27in RRB	2006/42/EC
03187	—	32-inch Rear Roller Brush Kit	RM 3100 32" REAR ROLLER BRUSH KIT	32in RRB	2006/42/EC

Relevant technical documentation has been compiled as required per Part B of Annex VII of 2006/42/EC.

We will undertake to transmit, in response to requests by national authorities, relevant information on this partly completed machinery. The method of transmission shall be electronic transmittal.

This machinery shall not be put into service until incorporated into approved Toro models as indicated on the associated Declaration of Conformity and in accordance with all instructions, whereby it can be declared in conformity with all relevant Directives.

Certified:



David Klis
Sr. Engineering Manager
8111 Lyndale Ave. South
Bloomington, MN 55420, USA
February 26, 2015

EU Technical Contact:

Peter Tetteroo
Toro Europe NV
B-2260 Oevel-Westerloo
Belgium

Tel. 0032 14 562960
Fax 0032 14 581911