FORM NO. 3318-505A

TORO®

GARDEN TRACTOR

MODEL NO. 73502-6900001 & UP

520H

SET UP INSTRUCTIONS

Loose Parts

Note: Use the chart below to identify parts for assembly.

DESCRIPTION	QTY.	USE
Front Wheel/Spindle Assemblies	2	Installing the front wheels
Thrust Washer – 1" I.D.	4	
Thrust Bearing – 1" I.D.	2	
Spacer	2	
Cotter Pin	2	
Retaining Ring	2	
Logo Hubcap – 8"	2	
Rear Wheel	2	Installing the rear wheels
Wheel Bolt	6	
Logo Hubcap – 12"	2	
Steering Wheel	1	Installing the steering wheel
Roll Pin	1	
Seat Assembly	1	Installing the seat
Locknut – 5/16"	4	
Bolt – 1/4"-20 x 3/4"	2	Attaching the battery cables
Hex Nut – 1/4"-20	2	
Flat Washer – 1/4"	2	
Lock Washer – 1/4"	2	
Terminal Cover – Red	1	
Hitch Pin	1	Installing the hitch pin
Hairpin Cotter	1	
Flat Washer – 1/2"	2	

©The Toro Company – 1996
All Rights Reserved

Printed in USA

DESCRIPTION	QTY.	USE
Hairpin Cotter	1	Attaching accessory to lift bar
Flat Washer – 1/2"	1	
Spare Key	1	Use in ignition switch
Operator's Manual	1	Attach to tractor
Set Up Instructions	1	Setting up tractor
Maintenance Checklist	1	Attach to underside of hood
Riding Mower Safety Video	1	Attach to tractor

Installing the Front Wheels

1. Before you install the front wheels onto the tractor, grease the wheel bearing fittings to make sure the bearings are packed with grease. Wipe off any excess grease.
2. Install two thrust washers and a thrust bearing onto each spindle (Fig. 1).
3. Install the wheel spindles (with wheels attached) into the front axle, then secure with retaining rings (Fig. 1).
4. Fasten the tie rod ends to the spindles with a spacer, slotted hex nut and cotter pin (Fig. 1).

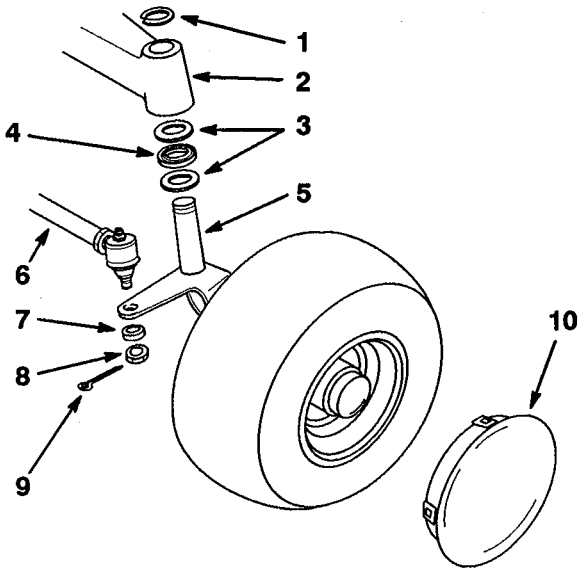

m-2472

Figure 1

1. Retaining Ring
2. Front Axle
3. Thrust Washer (2)
4. Thrust Bearing
5. Wheel Spindle
6. Tie Rod
7. Spacer
8. Slotted Hex Nut
9. Cotter Pin
10. Logo Hubcap – 8"

5. Make sure the front wheels are pointing straight ahead, then loosen the locknuts on the two tie rod ends (Fig 2).
6. With the tractor on a level surface, adjust both tie rods equally to get 1/8" toe-in. Measure the toe-in at the front edges of the rims, 6" above the ground (Fig 2).
7. Tighten the locknuts on the tie rods (Fig. 2).

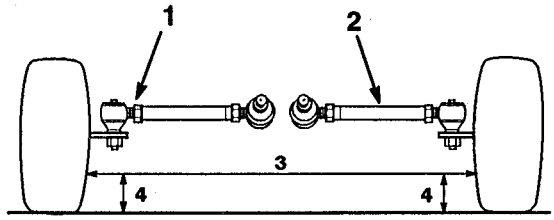

m-2471

Figure 2

1. Locknut (4)
2. Tie Rod (2)
3. Measure at rim edge
4. Six inches off the ground

8. Install the 8" logo hubcaps (Fig. 1).

Installing the Rear Wheels

1. Remove the four wheel bolts holding the rear shipping brackets to the rear hubs.
2. Before you install the rear wheels, loosen the two jam nuts on the inside of each hub and make sure the two square-head setscrews are torqued to 20–30 ft-lb (27–40 N•m). Tighten the jam nuts to 13–21 ft-lb (18–28 N•m).
3. Install the wheels onto the hub with the valve stems facing inward (Fig. 3).
4. Torque the wheel bolts to 75–80 ft-lb (105–112 N•m).
5. Install the 12" logo hubcaps.

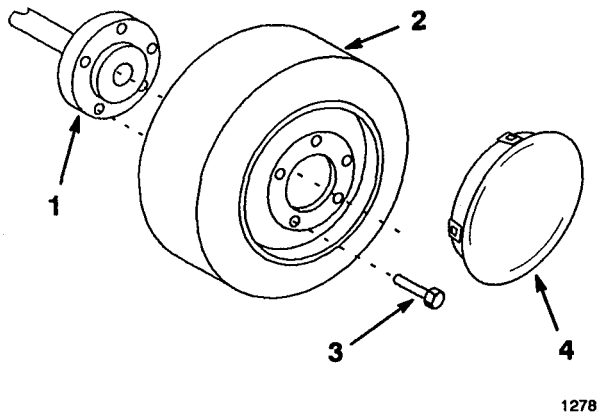

Figure 3

1. Hub
2. Rear Wheel
3. Wheel Bolt (5)
4. Logo Hubcap – 12"

Checking the Tire Pressure

Check the front and rear tire pressure. The correct front and rear tire pressure is 12 psi (0.8 bar).

Installing the Steering Wheel

1. Position the front wheels so they point straight ahead.
2. Install the steering wheel onto the shaft and align the center spoke (with the TORO logo) with the seat (Fig. 4).
3. Secure the steering wheel to the shaft with the roll pin (Fig. 4).

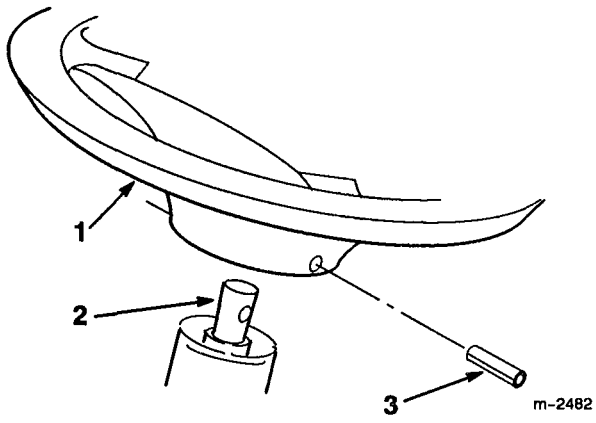

Figure 4

1. Steering Wheel
2. Shaft
3. Roll Pin

Activating the Battery

⚠ DANGER

POTENTIAL HAZARD

- **Battery electrolyte contains sulfuric acid which is a deadly poison and it causes severe burns.**

WHAT CAN HAPPEN

- **If you carelessly drink electrolyte you could die or if it gets onto your skin you will be burned.**

HOW TO AVOID THE HAZARD

- **Do not drink electrolyte and avoid contact with skin, eyes or clothing. Wear safety glasses to shield your eyes and rubber gloves to protect your hands.**
- **Fill the battery where clean water is always available for flushing the skin.**
- **Follow all instructions and comply with all safety messages on the electrolyte container.**

1. Remove the battery from the tractor.

   Note: Never fill the battery with electrolyte with the battery installed in the tractor.

2. Remove the filler caps from the battery. Slowly pour electrolyte into each cell until the electrolyte level is up to the lower part of the tube (Fig. 5). Use an electrolyte with a specific gravity of 1.265.

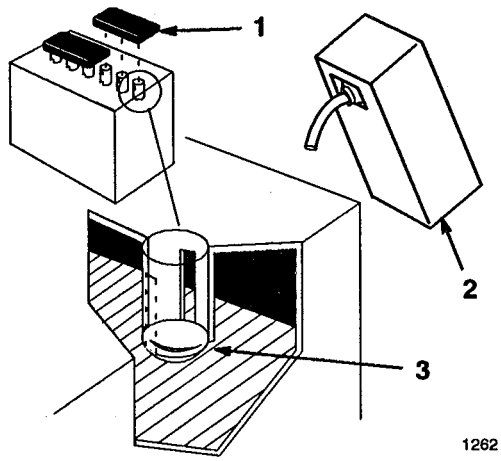

Figure 5

1. Filler Caps
2. Electrolyte
3. Lower part of the tube

⚠ WARNING

POTENTIAL HAZARD
- **Charging battery produces gasses.**

WHAT CAN HAPPEN
- **Battery gasses can explode.**

HOW TO AVOID THE HAZARD
- **Keep cigarettes, sparks and flames away from battery.**

3. Leave the filler caps off and connect a 3–4 amp battery charger to the battery posts (Fig. 6). Charge the battery at a rate of 4 amperes or less for 4 hours (12 volts).

4. When the battery is fully charged, unplug the charger from the electrical outlet, then disconnect the charger leads from the battery posts (Fig. 6).

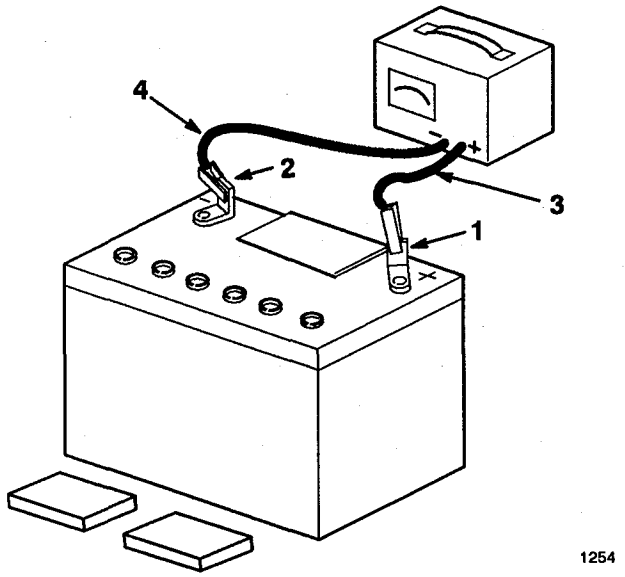

Figure 6

1. Positive Battery Post
2. Negative Battery Post
3. Red (+) Charger Lead
4. Black (–) Charger Lead

5. Slowly pour electrolyte into each cell until the level is once again up to the "UPPER" line on the battery case (Fig. 5), then install the filler caps.

6. Install the battery in the tractor and connect the battery cables. (Refer to the Operator's Manual – Installing the Battery.)

Note: Do not run the tractor with the battery disconnected.

Installing the Seat

1. Remove the plastic thread protector caps from the threaded studs on the bottom of the seat.
2. Install the seat onto the leaf springs, making sure the four seat studs fit through the matching holes in the leaf springs (Fig. 7).
3. Make sure the seat switch wire is routed correctly through the center opening in the seat base, then fasten the seat to the leaf springs with the four 5/16" locknuts (Fig 7).
4. Push the seat switch wire connector into the wire harness connector.

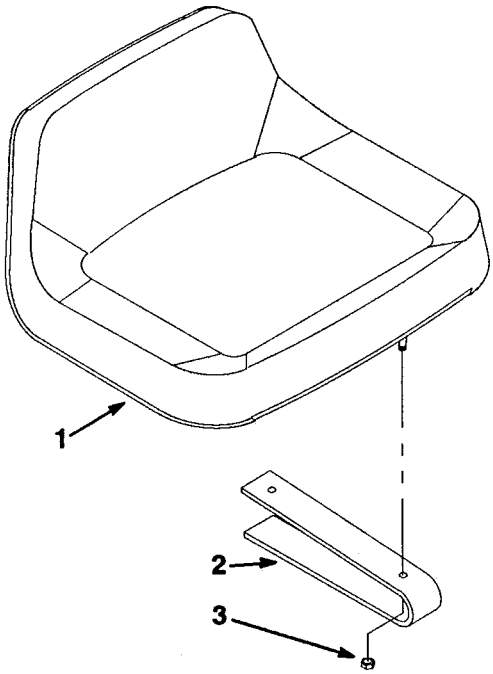

Figure 7

1. Seat
2. Leaf Spring (2)
3. 5/16" Locknut (4)

Installing the Drawbar Hitch

Insert the drawbar hitch pin into the drawbar hitch and secure it with a 1/2" flat washer and hairpin cotter (Fig. 8).

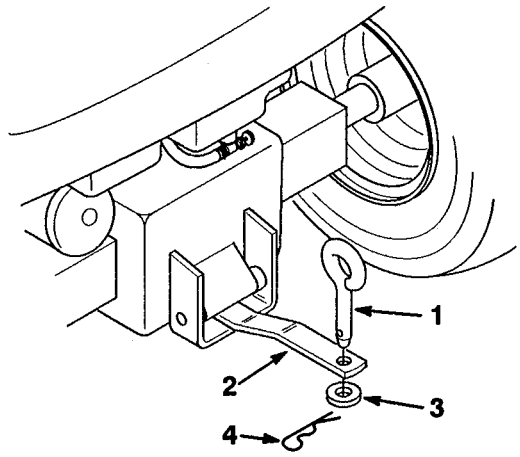

Figure 8

1. Drawbar Hitch Pin
2. Drawbar Hitch
3. 1/2" Flat Washer
4. Hairpin Cotter

Attaching the Washer and Hairpin Cotter onto the Lift Bar

Install a 1/2" flat washer and hairpin cotter onto the lift bar (Fig 9).

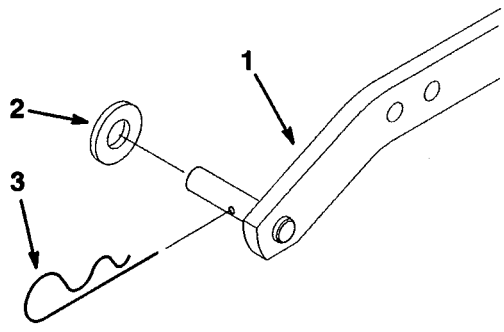

Figure 9

1. Lift Bar
2. 1/2" Flat Washer
3. Hairpin Cotter

Checking the Wiring and Fasteners

- Inspect the tractor for any loose electrical connections and secure as required. Check the wire routing to make sure no moving parts interfere with the wires to cause a short.
- Check all fasteners to make sure they're tight.

Attaching the Maintenance Chart

Attach the MAINTENANCE CHART to the underside of the hood.

Test Driving the Tractor

1. Check the oil level in the crankcase. Refer to the Operator's Manual for oil type, viscosity and crankcase capacity.

   Note: When checking the oil level, slide the dipstick all the way into the filler tube, but don't screw the dipstick onto the filler tube.

2. Check the oil level in the transaxle. Refer to the Operator's Manual for oil type, viscosity and capacity.
3. Check to make sure all lubrication points have been greased as shown in the Maintenance section of the Operator's Manual. These points include the front axle, tie rods, foot pedal and steering gear.
4. Fill the tank with unleaded regular gasoline with an octane rating of at least 85. Open the fuel shutoff valve and check the fuel hose and fittings for leaks.
5. As applicable, check and test the operation of the following:
   - Engine, choke and throttle controls
   - Gauges
   - Headlights and taillights
   - Indicator lights
   - PTO clutch and brake
   - Lift system
   - Service and parking brakes
   - Transmission controls
   - Steering
   - Tractor operation in forward and reverse
6. Test the operation of the safety interlock system. The engine should **not** crank if:
   - The seat is unoccupied
   - The motion control lever is in the forward or reverse position
   - The PTO lever is in the ENGAGED position
   - The parking brake is not on