Form No. 3395-683 Rev A

TORO®

Count on it.

Parts Catalog

# Electric Hose Reel Kit

## 2015 and After Multi Pro® 1750 Turf Sprayer

**Model No. 41159—Serial No. 315000001 and Up**

Register at www.Toro.com.
Original Instructions (EN)

CE

*3395-683* A

# Ordering Replacement Parts

To order replacement parts, please supply the part number, the quantity, and the description of each part desired.

**Understanding Reference Numbers**

Each identified part in an illustration has a reference number. The reference number for a part also appears in the parts list, along with other information about the part.

This catalog uses two special reference number formats, one to indicate parts in a service assembly and another to indicate the quantity of a given part in an illustration.

**Service Assembly Reference Numbers**

Parts in service assemblies have reference numbers in the form a:b. The a represents the reference number of the entire service assembly and the b represents a sequential number unique to each part within the service assembly.

For example, a wheel assembly might be identified by reference number 6, the tire by 6:1, the valve by 6:2, and the wheel by 6:3. When you order the assembly identified by reference number 6, you receive all parts identified by reference numbers 6:1,6:2, and 6:3. However, you may also order any part individually. Reference numbers of this type appear in illustration and in parts lists.

**Reference Numbers Indicating Quantity**

In an illustration, if a reference number indicates more than one part, the reference number has the form nX y. The n represents the quantity of the part, the X is the multiplication symbol, and the y represents the reference number.

For example, in an illustration, the reference number 2X 37 means that two of the parts identified by reference number 37 are indicated.

# List of Abbreviations

**AR:** as required

**ASM:** assembly

**BBC:** blade brake control

**BHTF:** button head thread forming

**CARR:** carriage

**CCW:** counter clockwise

**CW:** clockwise

**DEG:** degrees

**DPA:** Dual Point Adjustment

**ECM:** electronic control module

**EXT:** external

**FH:** flat head

**GA:** gauge

**HD:** heavy-duty

**HF:** hex flange

**HH:** hex head

**HHF:** hex head flange

**HHFTF:** hex head flange thread forming

**HJ:** hex jam

**HLH:** hex lag head

**HOC:** height-of-cut

**HP:** high pressure

**HSBH:** hex socket button head

**HSFH:** hex socket flat head

**HSH:** hex socket head

**HWH:** hex washer head

**HWHTF:** hex washer head thread forming

**HYD:** hydraulic

**LH:** left hand

**LP:** low pressure

**LPG:** Liquefied Petroleum Gas

**NI:** nylon insert

**NPTF:** national pipe thread fine

**PFH:** phillips flat head

**PPH:** phillips pan head

**PPHTF:** phillips pan head thread forming

**PRH:** phillips round head

**PTH:** phillips truss head

**PTO:** power-take-off

**RH:** right hand

**ROPS:** roll-over protection system

**RRB:** rear roller brush

**SFH:** slotted fillister head

**SHH:** slotted hex head

**SHWH:** slotted hex washer head

**SPH:** slotted pan head

**SQH:** square head

**SRH:** slotted round head

**STD:** standard

**TAP:** self tapping

**TTH:** torx truss head

# Contents

Electric Hose Reel Kit . . . . . 4
Hose Reel Frame Assembly No. 127-3910 . . . . . 6
Shutoff Bypass Valve Assembly No. 131-5838 . . . . . 7
On/Off 2-Way Valve Kit No. 131-0249 . . . . . 8
Hose Reel Valve Assembly No. 130-7321 . . . . . 9
Spray Gun Assembly No. 120-8610 . . . . . 10

**© 2015—The Toro® Company**
**8111 Lyndale Avenue South**
**Bloomington, MN 55420**



**Contact us at www.Toro.com.**
**Printed in the USA.**
**All Rights Reserved**

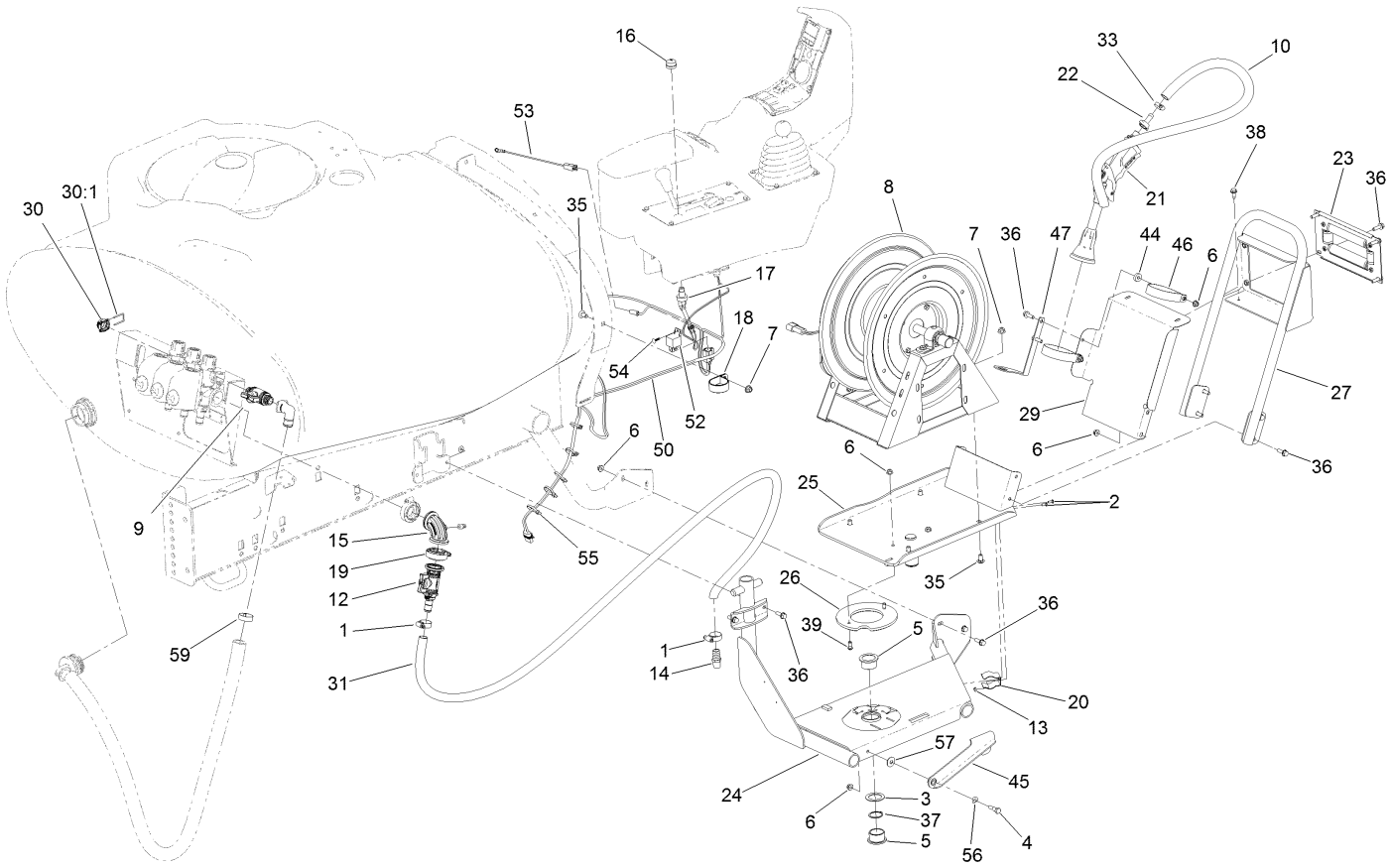


# Electric Hose Reel Kit

| Ref. | Part Number | Qty. | Description |
|---|---|---|---|
| 1 | 2412-129 | 2 | Clamp-Hose |
| 2 | 1-807513 | 2 | Bolt-CARR |
| 3 | 62-2170 | 1 | Washer-Thrust |
| 4 | 121-6991 | 1 | Bolt-Shoulder |
| 5 | 93-4510 | 2 | Bushing-Caster |
| 6 | 104-8300 | 13 | Nut-Flange, NI |
| 7 | 104-8301 | 5 | Nut-Flange, NI |
| 8 | 127-3910 | 1 | Hose Reel ASM |
| 9 | 131-5838 | 1 | Shutoff Bypass Valve ASM |
| 10 | 107-8756 | 1 | Hose-Hose Reel |
| 12 | 130-7321 | 1 | Hose Reel Valve ASM |
| 13 | 110-3145 | 2 | Nut-Lock |
| 14 | 110-5065 | 1 | Hosebarb |
| 15 | 131-3726 | 1 | Fitting-Elbow, 90 DEG |
| 16 | 112-3313 | 1 | Nut-Weatherproof |
| 17 | 112-3324 | 1 | Switch-Horn |
| 18 | 114-9566 | 1 | Clamp-R |
| 19 | 127-9829 | 1 | Clamp/Gasket Kit |
| 20 | 119-4937 | 1 | Clip-Spring |
| 21 | 120-8610 | 1 | Spray Gun ASM |
| 22 | 121-4982 | 1 | Hosebarb-Spray Gun |

| Ref. | Part Number | Qty. | Description |
|---|---|---|---|
| 23 | 121-4983 | 1 | Bracket-Roller |
| 24 | 125-4172-03 | 1 | Frame-Hose Reel |
| 25 | 125-4177-03 | 1 | Pivot-Base |
| 26 | 125-7990 | 1 | Slide-Detent |
| 27 | 125-8014-03 | 1 | Handle ASM |
| 29 | 125-8044-03 | 1 | Shield-Mud |
| 30 | 127-9811 | 1 | Fitting-Cap, Female |
| 30:1 | 127-1175 | 1 | Fork |
| 31 | 125-8046 | 1 | Hose-Supply, Hose Reel |
| 33 | 2412-36 | 1 | Clamp-Hose |
| 35 | 3231-21 | 5 | Screw-CARR |
| 36 | 3234-29 | 14 | Screw-HHF |
| 37 | 32120-84 | 1 | Ring-Snap, External |
| 38 | 32144-70 | 2 | Screw-HWHTF |
| 39 | 121-9671 | 2 | Screw-HSBH |
| 44 | 26-4840 | 2 | Spacer-Pin, Mounting |
| 45 | 127-3957 | 1 | Latch |
| 46 | 120-8592 | 2 | Clamp-R |
| 47 | 120-8593-03 | 1 | Bracket-Spray Gun |
| 50 | 122-0159 | 1 | Harness-Wire, Hose Reel |
| 52 | 99-7435 | 1 | Relay-Power |

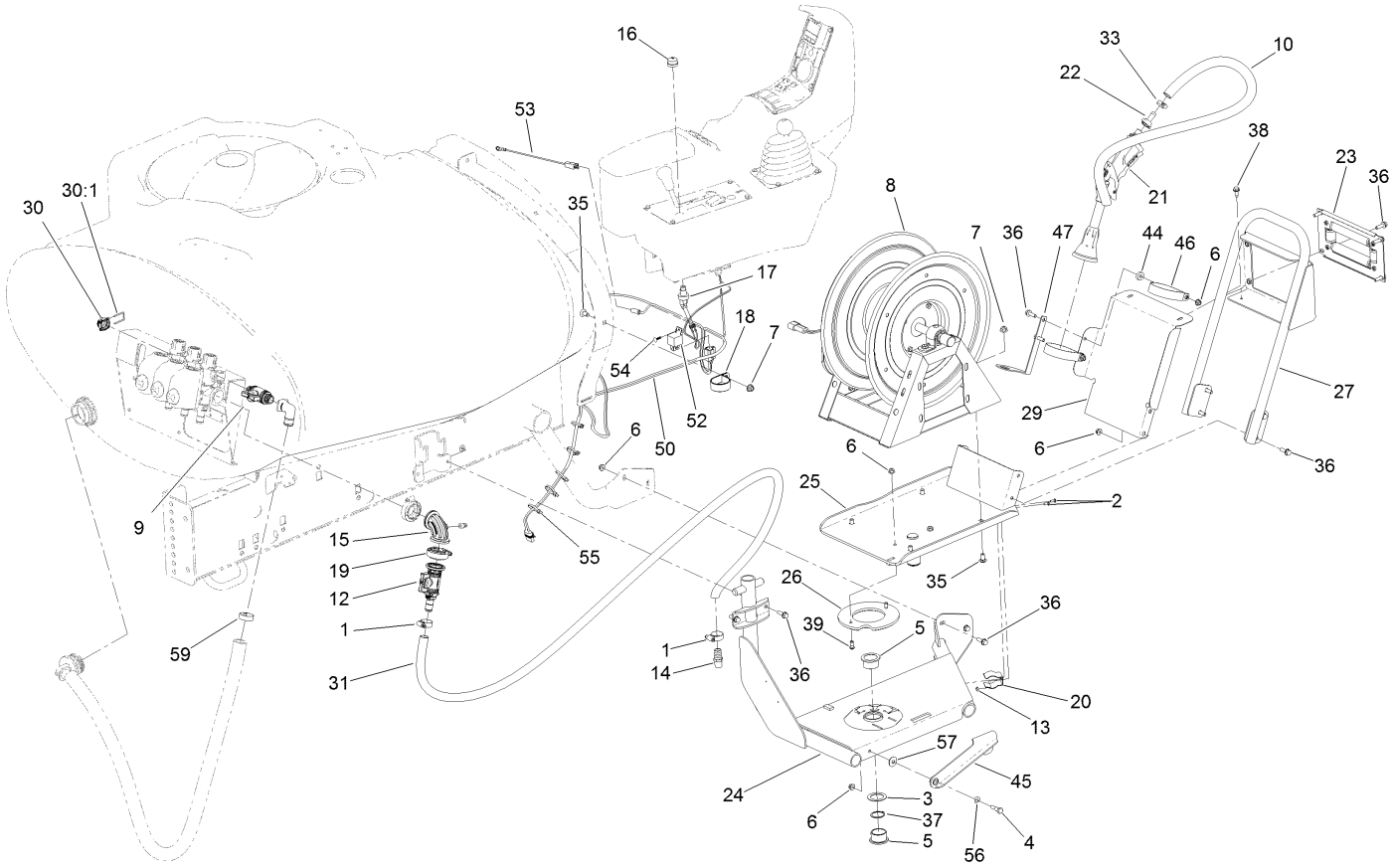


# Electric Hose Reel Kit (continued)

| Ref. | Part Number | Qty. | Description |
|---|---|---|---|
| 53 | 108-9455 | 1 | Harness-Wire, Fusible Link |
| 54 | 125-8067 | 1 | Plug-Plastic |
| 55 | 3290-379 | 5 | Tie-Cable |

| Ref. | Part Number | Qty. | Description |
|---|---|---|---|
| 56 | 3290-301 | 1 | Washer-Spring |
| 57 | 3290-461 | 1 | Washer-Spring |
| 59 | 2412-34 | 1 | Clamp-Hose |

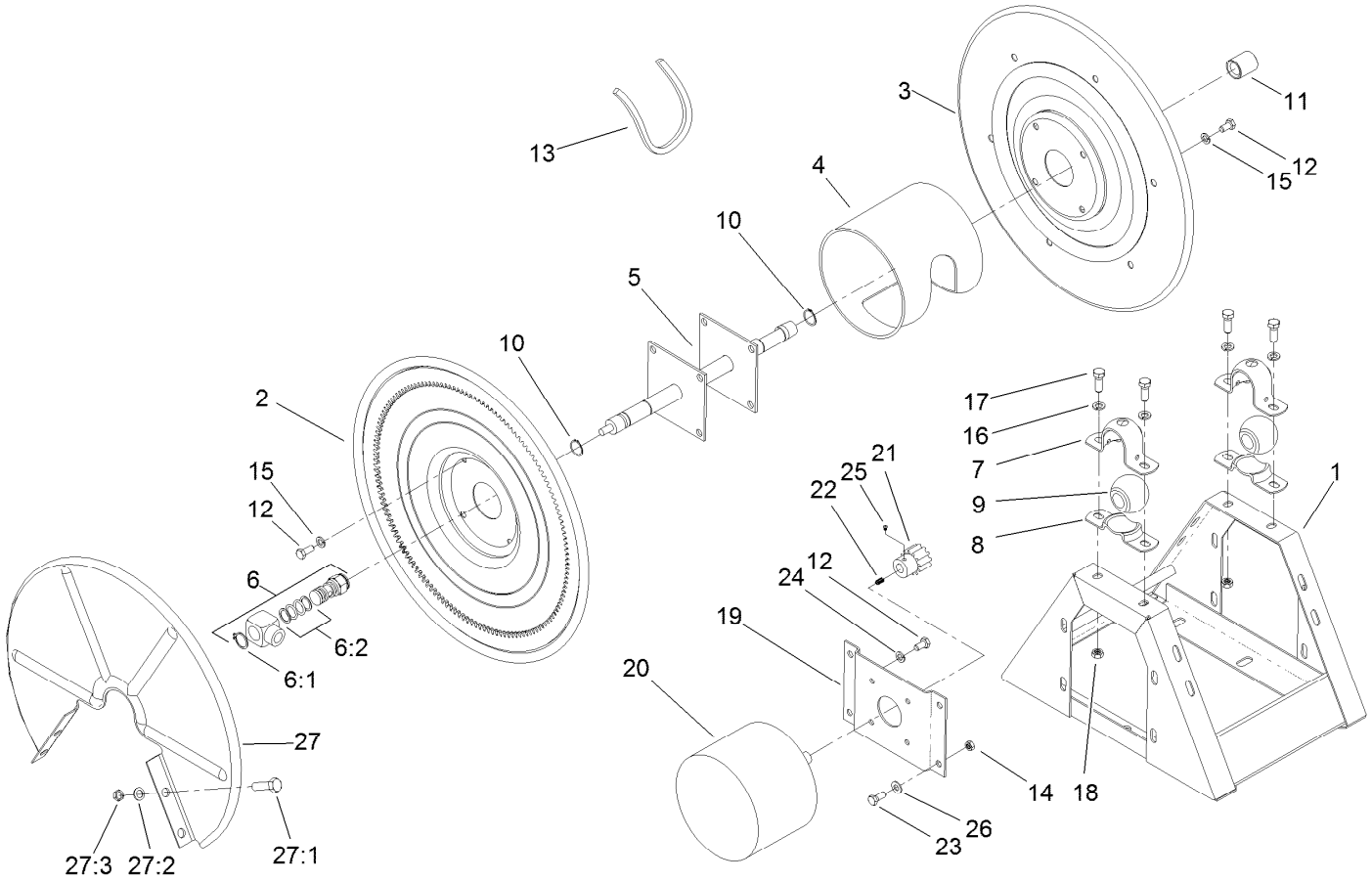


# Hose Reel Frame Assembly No. 127-3910

| *Ref.* | *Part Number* | *Qty.* | *Description* |
|---|---|---|---|
| 1 | 104-8803 | 1 | Frame-Reel, Hose |
| 2 | 104-8804 | 1 | Disc And Gear |
| 3 | 104-8805 | 1 | Disc-Crank, Side |
| 4 | 104-8806 | 1 | Drum-Center |
| 5 | 104-8807 | 1 | Axle |
| 6 | 104-8808 | 1 | Swivel ASM |
| 6:1 | 104-8812 | 1 | Ring-Retainer |
| 6:2 | 104-8864 | 1 | Swivel Seal Kit |
| 7 | 104-8809 | 2 | Block-Pillow, Top |
| 8 | 104-8810 | 2 | Block-Pillow, Bottom |
| 9 | 104-8811 | 2 | Bearing |
| 10 | 104-8812 | 4 | Ring-Retainer |
| 11 | 104-8813 | 1 | Cap-Pipe |
| 12 | 322-3 | 8 | Screw-HH |
| 13 | 104-8814 | 1 | Trim-Edge, Drum |
| 14 | 3296-29 | 8 | Nut-Lock, NI |

| *Ref.* | *Part Number* | *Qty.* | *Description* |
|---|---|---|---|
| 15 | 3256-23 | 16 | Washer-Flat |
| 16 | 3253-21 | 4 | Washer-Lock |
| 17 | 323-6 | 4 | Screw-HH |
| 18 | 32128-21 | 1 | Nut-HF |
| 19 | 104-8815 | 1 | Bracket-Motor, 12V Dc |
| 20 | 131-0282 | 1 | Motor-12V Dc |
| 21 | 104-8817 | 1 | Pinion |
| 22 | 104-8818 | 4 | Key |
| 23 | 322-5 | 8 | Screw-HH |
| 24 | 3253-4 | 1 | Washer-Lock |
| 25 | 104-8819 | 4 | Screw-Set |
| 26 | 3256-23 | 4 | Washer-Flat |
| 27 | 104-8715 | 1 | Chainguard-Reel, Hose |
| 27:1 | 322-5 | 4 | Screw-HH |
| 27:2 | 3256-23 | 4 | Washer-Flat |
| 27:3 | 3296-29 | 4 | Nut-Lock, NI |

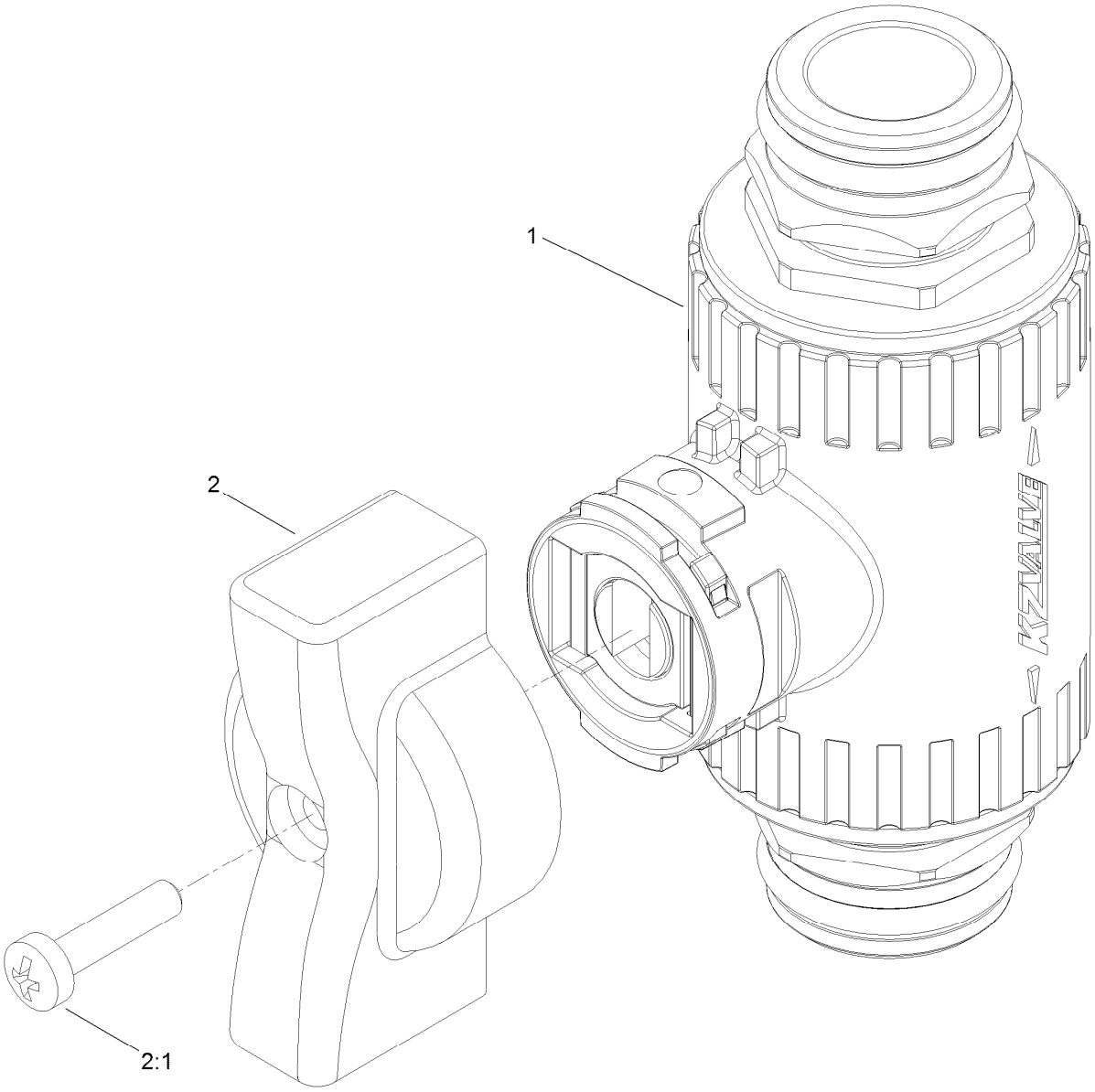


# Shutoff Bypass Valve Assembly No. 131-5838

| *Ref.* | *Part Number* | *Qty.* | *Description* |
|---|---|---|---|
| 1 | 131-0249 | 1 | On/Off 2-Way Valve Kit |
| 2 | 131-0267 | 1 | Bypass Handle Kit |
| 2:1 | 131-0263 | 1 | Screw-Handle |

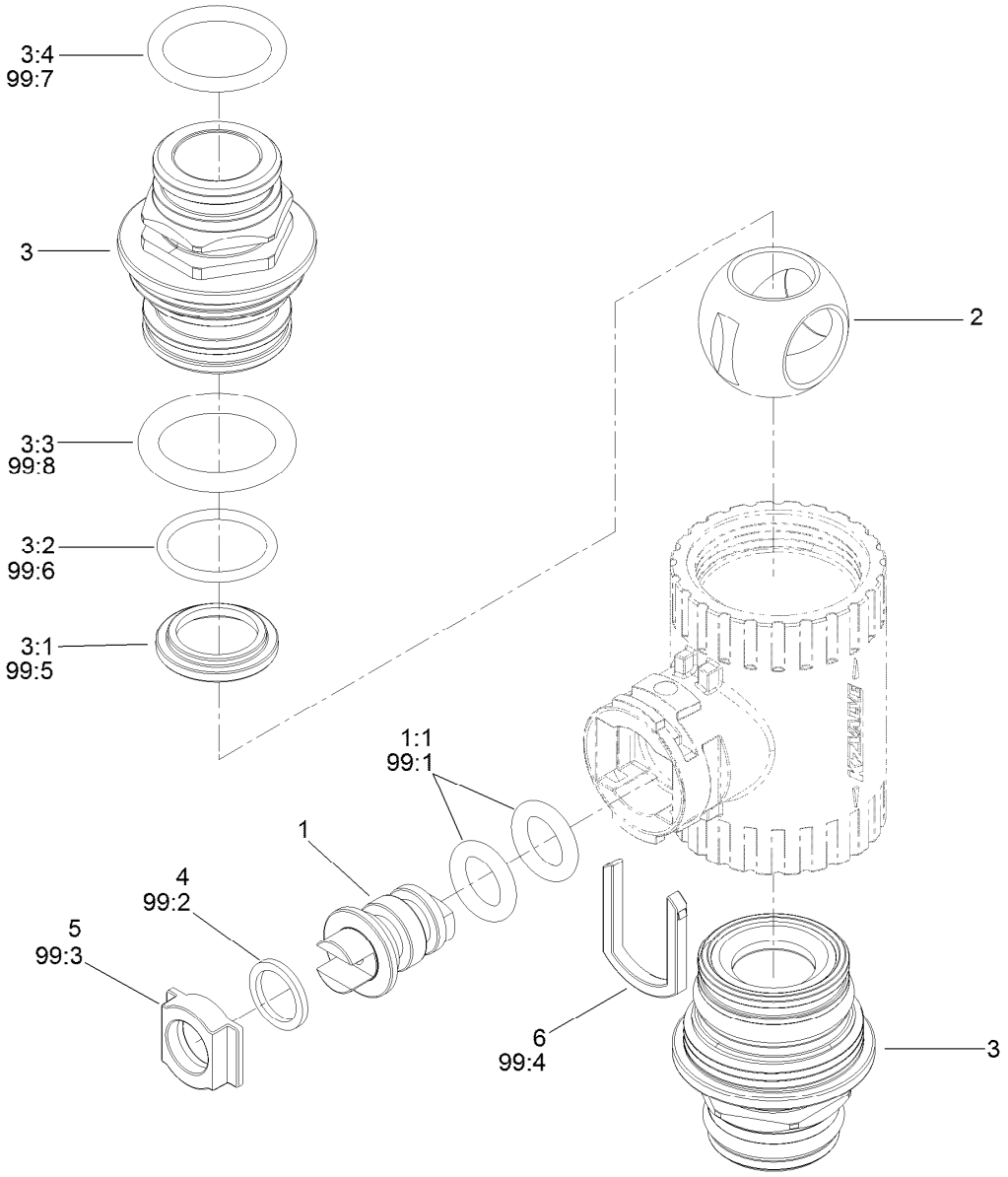


# On/Off 2-Way Valve Kit No. 131-0249

| *Ref.* | *Part Number* | *Qty.* | *Description* |
|---|---|---|---|
| 1 | 130-8248 | 1 | Vavle Stem Kit |
| 1:1 | 127-1197 | 2 | O-Ring, Stem |
| 2 | 131-0252 | 1 | Ball-2-Way |
| 3 | 130-7317 | 2 | Endcap Kit |
| 3:1 | 127-1192 | 1 | Seat-Ball |
| 3:2 | 127-1188 | 1 | O-Ring, Seat (Ball) |
| 3:3 | 127-1189 | 1 | O-Ring, Endcap |
| 3:4 | 127-1187 | 1 | O-Ring, Endcap |
| 4 | 127-1196 | 1 | Washer-Stem, Valve |
| 5 | 127-1195 | 1 | Seat-Stem, Valve |

| *Ref.* | *Part Number* | *Qty.* | *Description* |
|---|---|---|---|
| 6 | 127-1190 | 1 | Fork-Stem, Valve |
| 99 | 130-7304 | 1 | Valve Repair Kit ● |
| 99:1 | 127-1197 | 2 | O-Ring, Stem |
| 99:2 | 127-1196 | 2 | Washer-Stem, Valve |
| 99:3 | 127-1195 | 1 | Seat-Stem, Valve |
| 99:4 | 127-1190 | 1 | Fork-Stem, Valve |
| 99:5 | 127-1192 | 2 | Seat-Ball |
| 99:6 | 127-1188 | 2 | O-Ring, Seat (Ball) |
| 99:7 | 127-1187 | 2 | O-Ring, Endcap |
| 99:8 | 127-1189 | 2 | O-Ring, Endcap |

● Not illustrated

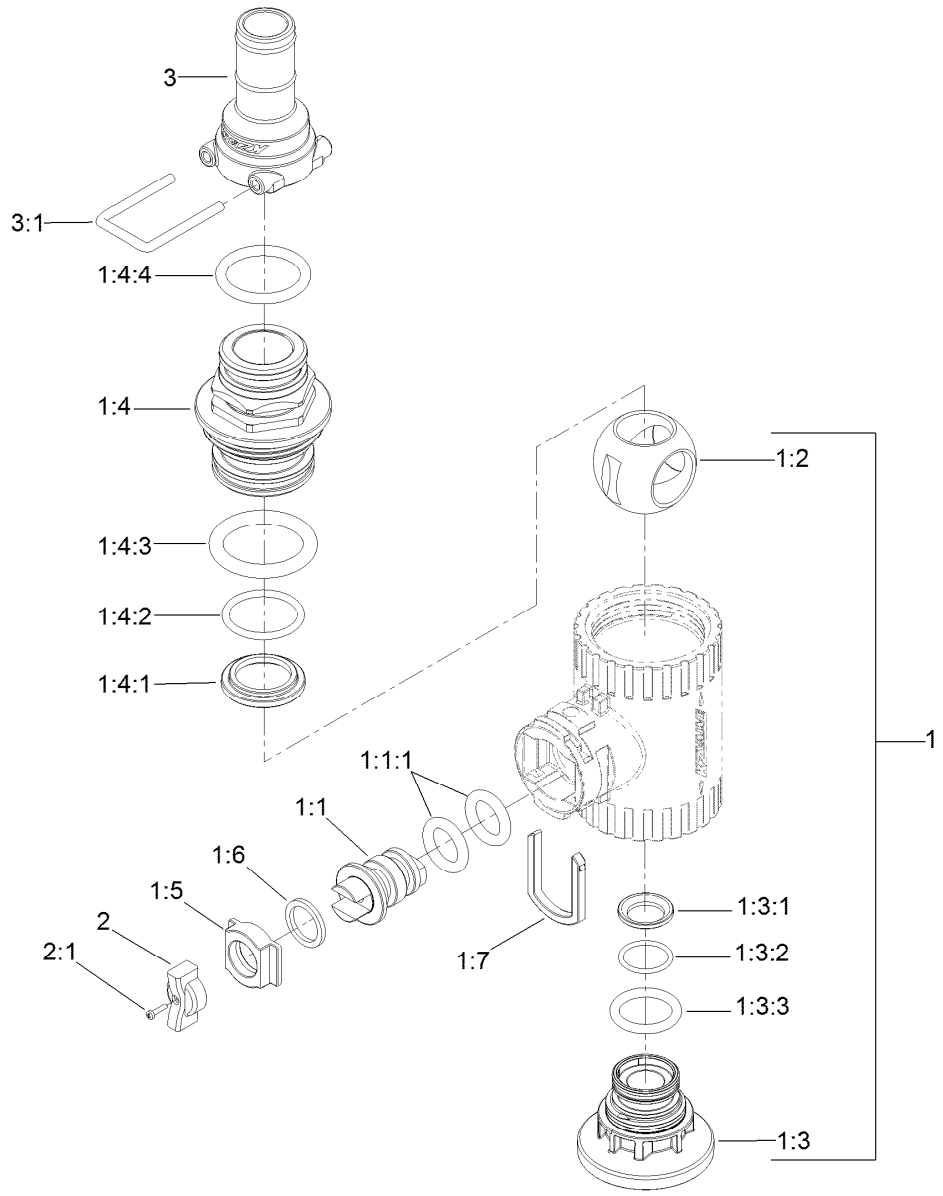


# Hose Reel Valve Assembly No. 130-7321

| *Ref.* | *Part Number* | *Qty.* | *Description* |
|---|---|---|---|
| 1 | 131-0250 | 1 | 2-Way Valve On/Off Kit |
| 1:1 | 130-8248 | 1 | Vavle Stem Kit |
| 1:1:1 | 127-1197 | 2 | O-Ring, Stem |
| 1:2 | 131-0252 | 1 | Ball-2-Way |
| 1:3 | 130-8249 | 1 | Endcap Kit |
| 1:3:1 | 127-1192 | 1 | Seat-Ball |
| 1:3:2 | 127-1188 | 1 | O-Ring, Seat (Ball) |
| 1:3:3 | 127-1189 | 1 | O-Ring, Endcap |
| 1:4 | 130-7317 | 1 | Endcap Kit |
| 1:4:1 | 127-1192 | 1 | Seat-Ball |

| *Ref.* | *Part Number* | *Qty.* | *Description* |
|---|---|---|---|
| 1:4:2 | 127-1188 | 1 | O-Ring, Seat (Ball) |
| 1:4:3 | 127-1189 | 1 | O-Ring, Endcap |
| 1:4:4 | 127-1187 | 1 | O-Ring, Endcap |
| 1:5 | 127-1196 | 1 | Washer-Stem, Valve |
| 1:6 | 127-1195 | 1 | Seat-Stem, Valve |
| 1:7 | 127-1190 | 1 | Fork-Stem, Valve |
| 2 | 131-0268 | 1 | Hose Reel Handle Kit |
| 2:1 | 131-0263 | 1 | Screw-Handle |
| 3 | 127-9807 | 1 | Straight Fitting Kit |
| 3:1 | 127-1175 | 1 | Fork |

# Spray Gun Assembly No. 120-8610

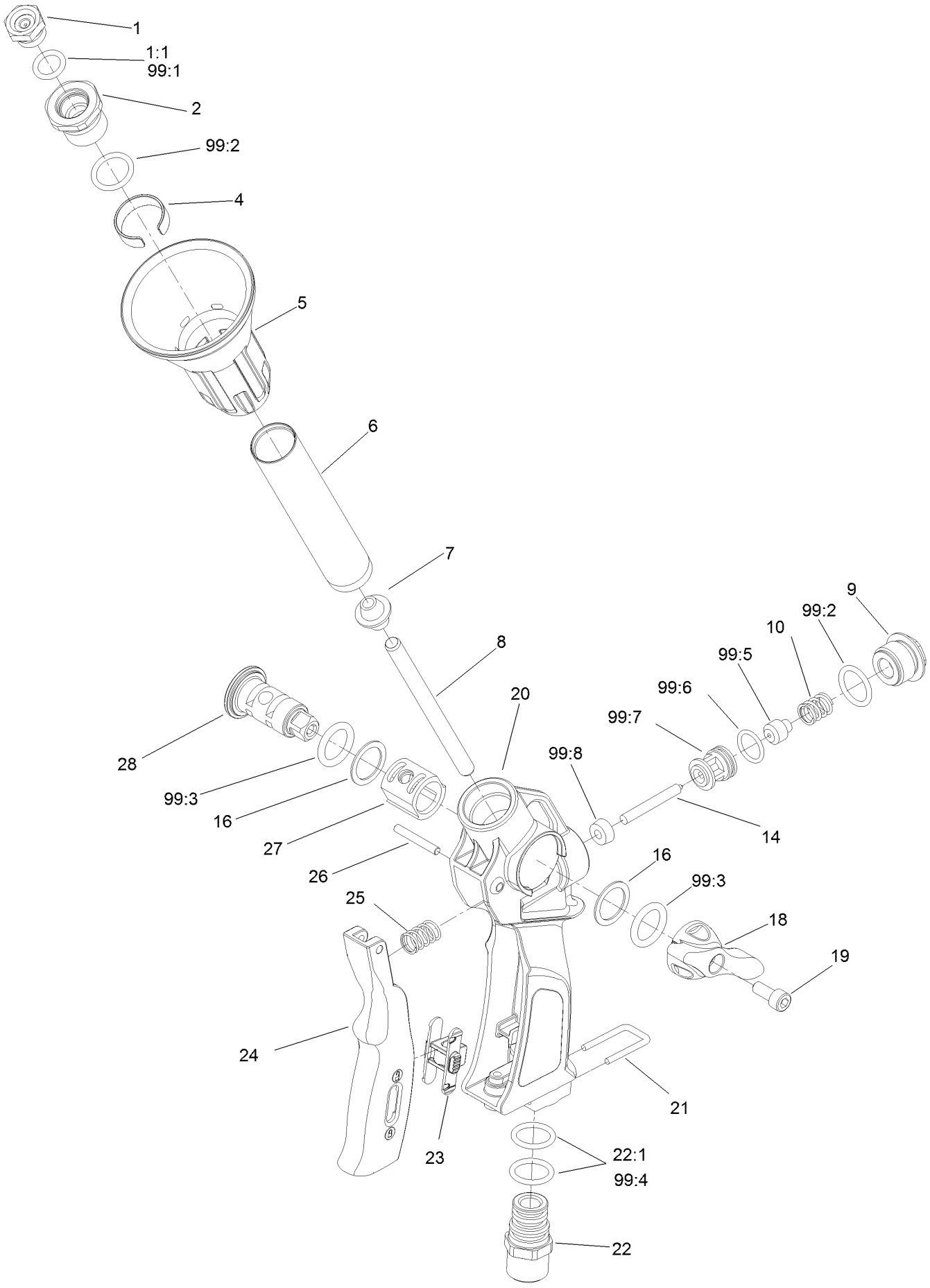

# Spray Gun Assembly No. 120-8610 (continued)

| Ref. | Part Number | Qty. | Description |
|---|---|---|---|
| 1 | 121-4950 | 1 | Nozzle-2.3Mm |
| 1:1 | 121-4951 | 1 | O-Ring |
| 2 | 121-4952 | 1 | Head-Nozzle Holder |
| 4 | 121-4954 | 1 | Ring-Spacer |
| 5 | 121-4955 | 1 | Spreader-Micro Jet |
| 6 | 121-4956 | 1 | Tube-Spray Gun |
| 7 | 121-4957 | 1 | Conveyor-Inner |
| 8 | 121-4958 | 1 | Tube-Spray Gun, Inner |
| 9 | 121-4959 | 1 | Drum-Regulation |
| 10 | 121-4960 | 1 | Spring-Spray Gun |
| 14 | 121-4964 | 1 | Pin-Hinge |
| 16 | 121-4966 | 2 | Washer-Teflon |
| 18 | 121-4968 | 1 | Lever-Drum, Spray Gun |
| 19 | 121-4969 | 1 | Screw |
| 20 | 121-4970 | 1 | Grip-Spray Gun |
| 21 | 121-4971 | 1 | Fork |
| 22 | 121-4973 | 1 | Hose-Tail |
| 22:1 | 121-4972 | 2 | O-Ring |
| 23 | 121-4974 | 1 | Slide-Lever |
| 24 | 121-4975 | 1 | Lever-Spraygun |
| 25 | 121-4977 | 1 | Spring |
| 26 | 121-4978 | 1 | Pin-Lever |
| 27 | 121-4979 | 1 | Cover-Drum |
| 28 | 121-4980 | 1 | Drum-Regulation |
| 99 | 121-4981 | 1 | Spray Gun Seal Kit ● |
| 99:1 | 121-4951 | 1 | O-Ring |
| 99:2 | 121-4953 | 2 | Gasket |
| 99:3 | 121-4967 | 2 | O-Ring |
| 99:4 | 121-4972 | 2 | O-Ring |
| 99:5 | 121-4962 | 1 | Plunger-Cone |
| 99:6 | 121-4961 | 1 | O-Ring |
| 99:7 | 121-4963 | 1 | Box And Seat |
| 99:8 | 121-4965 | 1 | Seal |

● Not illustrated




**Count on it.**