Form No. 3395-797 Rev A

DPA Reel Mower Groomer

Greensmaster® 3050/3100/3150/3250-D Traction Unit

Model No. 04634

Model No. 04635

Installation Instructions

⚠ WARNING

CALIFORNIA
Proposition 65 Warning

This product contains a chemical or chemicals known to the State of California to cause cancer, birth defects, or reproductive harm.

Note: The DPA Reel Mower Groomer can be installed on cutting unit models 04610 and 04611.

Note: The figures show the left groomer drives.

Important: Read these instructions thoroughly before setting up or operating the groomer. Failure to follow setup or operation instructions in this manual may result in damage to the cutting unit and/or the groomer or the turf.

Note: Determine the left and right sides of the machine from the normal operating position.

© 2015—The Toro® Company
8111 Lyndale Avenue South
Bloomington, MN 55420

Register at www.Toro.com.

CE

Original Instructions (EN)
Printed in the USA
All Rights Reserved

3395-797 A

Installation

Loose Parts

Use the chart below to verify that all parts have been shipped.

Description	Qty.	Use
Locknut (M8)	6	Install the kit.
Left cover (Model 04634)	3	
Left cover (Model 04635)	2	
Right cover (Model 04635)	1	
Belt	3	
Pulley assembly	3	
Shoulder nut	6	
Extension spring	3	
Nut (3/8 inch)	6	
Driven pulley	3	
Bolt (M6–1 x 12 mm)	3	
Right adjuster-arm assembly	3	
Bushing	6	
Left drive assembly (Model 04634)	3	
Left drive assembly (Model 04635)	2	
Right sideplate (Model 04635)	1	
Spring washer	6	
Locknut (3/8 inch)	6	
Shim	3	
Bolt (M8)	6	
Groomer-shaft assembly	3	
Bearing	6	
Cap plug	3	
Left adjuster-arm assembly	3	
Washer	3	
Bolt (M6–1 x 20 mm)	3	
Spacer	18	
Bolt (M6–1 x 60 mm)	12	

Installing the kit

Installing the Drive Assembly

1. Separate the cutting unit from the traction unit; refer to the *Operator's Manual*.
2. Loosen the bolts securing each end of the front roller to the height-of-cut arms (Figure 1).

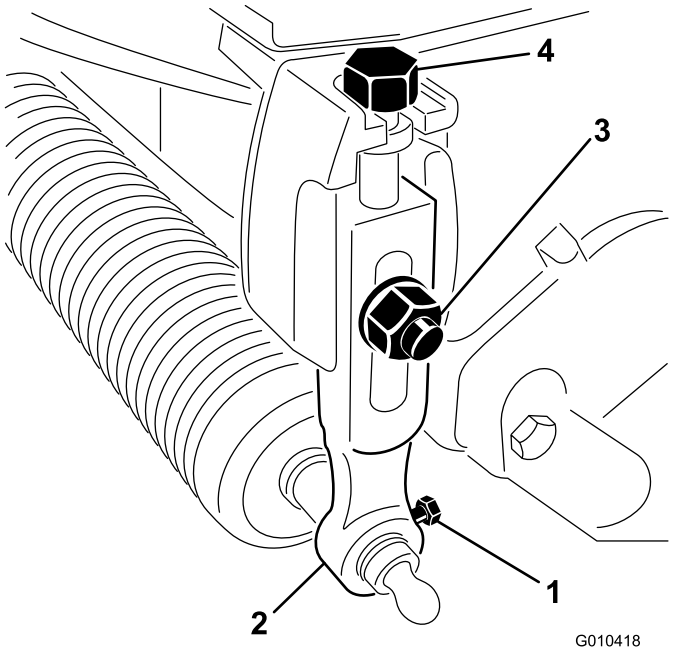

Figure 1

1. Roller mounting bolt
2. Height-of-cut arm
3. Carriage bolt, washer, and locknut
4. Adjusting bolt

3. Remove the carriage bolts, washers, and locknuts securing the height-of-cut arms to each cutting unit, and remove the height-of-cut arms and roller assembly (Figure 1).

   Note: Retain all parts for use if you remove the groomer.
4. Remove the height-of-cut adjusting bolts from the height-of-cut arms (Figure 1).
5. Remove the 2 bolts and 2 nuts securing the counterweight to the left end of the cutting unit and the counterweight (Figure 2).

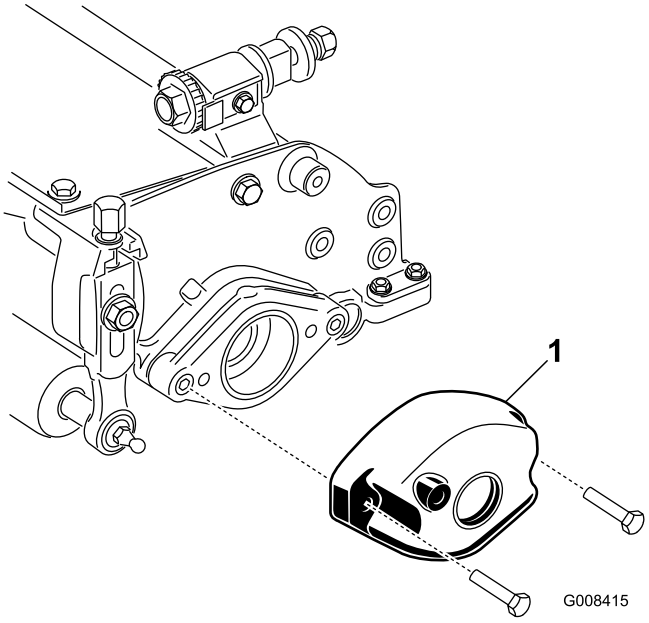

Figure 2

1. Counterweight

6. Remove the 2 allen-head screws securing the motor mount to the right end of the cutting unit and the motor mount (Figure 3).

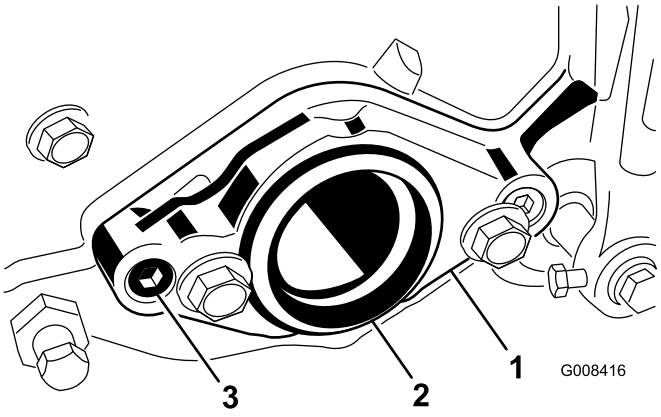

Figure 3

1. Motor mount
2. Plastic plug
3. Allen-head screw

7. Install 2 bolts (M8) through the left sideplate as shown in Figure 4.

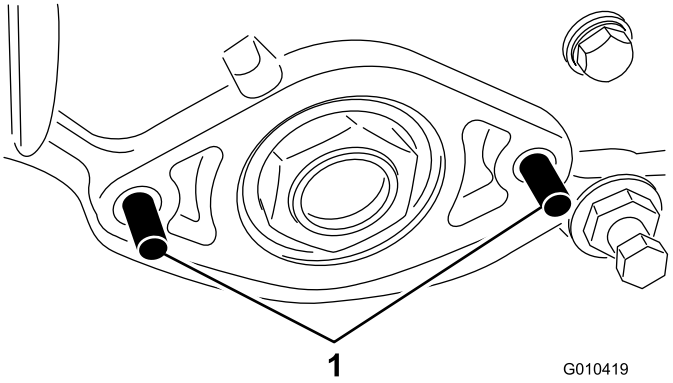

Figure 4

1. Bolt

8. Insert the shim onto the bolts, positioning as shown in Figure 5.

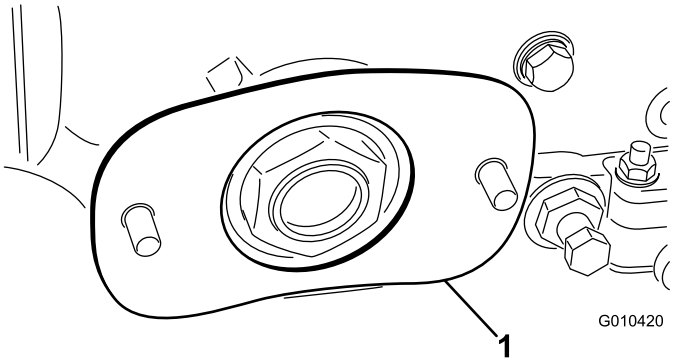

Figure 5

1. Shim

9. Insert the left drive assembly onto the bolts and secure with 2 shoulder nuts (Figure 6).

   Note: Make sure that the sideplate rotates freely.

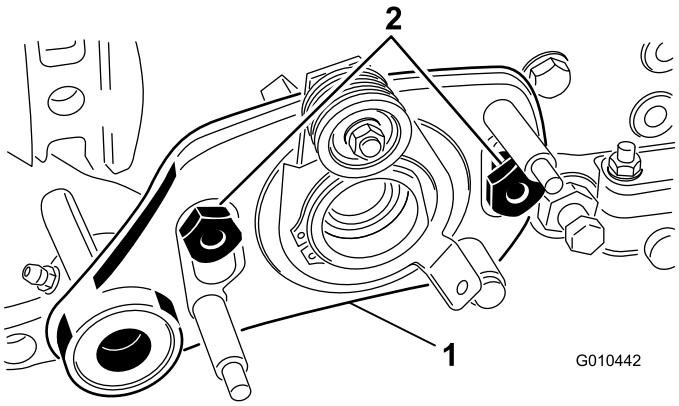

Figure 6

1. Left drive assembly
2. Shoulder bolt

Installing the Groomer Shaft

1. Apply grease to the seal in the drive-assembly-bearing support and to the end of the groomer shaft (Figure 7).

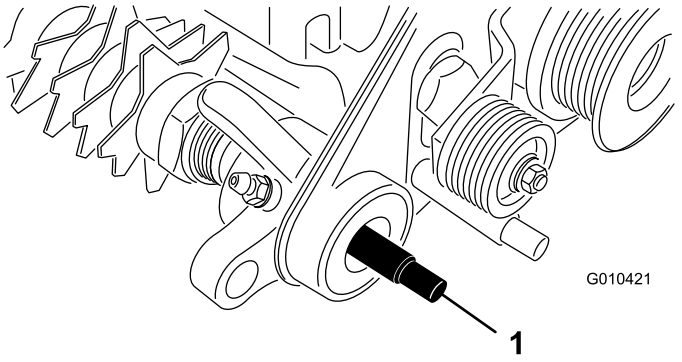

Figure 7

1. Groomer shaft

2. Slide one end of the groomer shaft into the drive-assembly-bearing support (Figure 7).
3. Apply grease to the outer surface of the driven pulley, as shown in Figure 8.

   Note: Do not put grease on the area where the belt will ride.

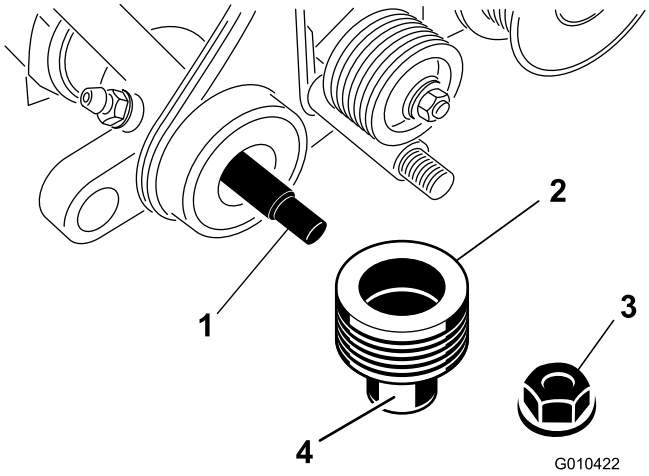

Figure 8

1. Groomer shaft
2. Driven pulley
3. Locknut
4. Apply grease here.

4. Slide the pulley onto the groomer shaft (Figure 8).
5. Secure the pulley to the shaft with a locknut (3/8 inch) as shown in Figure 8.

6. Apply grease to the seal in the right sideplate-bearing support and to the end of the groomer shaft (Figure 9).

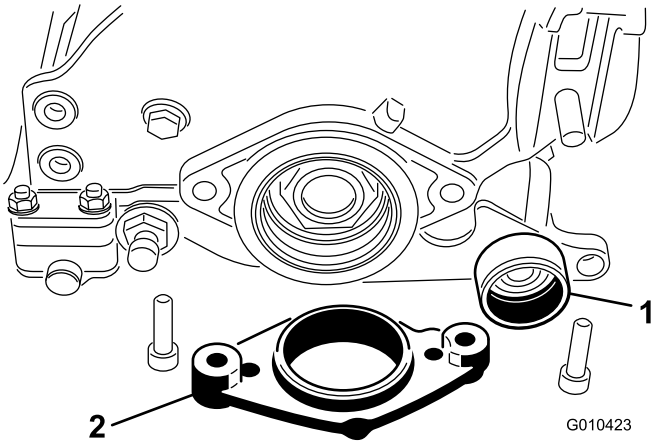

Figure 9

1. Right sideplate-bearing support
2. Motor mount

7. Insert the other end of the groomer shaft into the right sideplate-bearing support (Figure 9).

   Note: No key is required in this end.

8. Insert the motor mount onto the sideplate (Figure 9).
9. Secure the motor mount and sideplate to the right end of the cutting unit with the 2 bolts and nuts previously removed (Figure 9).

   Note: Make sure that the sideplate rotates freely.

10. Insert the bearings onto the groomer shaft in the groomer housing (Figure 10).

    Note: The extended bearing races should contact each other when installed to create a 0.64 cm (1/4 inch) gap between the bearings. Support the groomer shaft to reduce misalignment through the bearings.

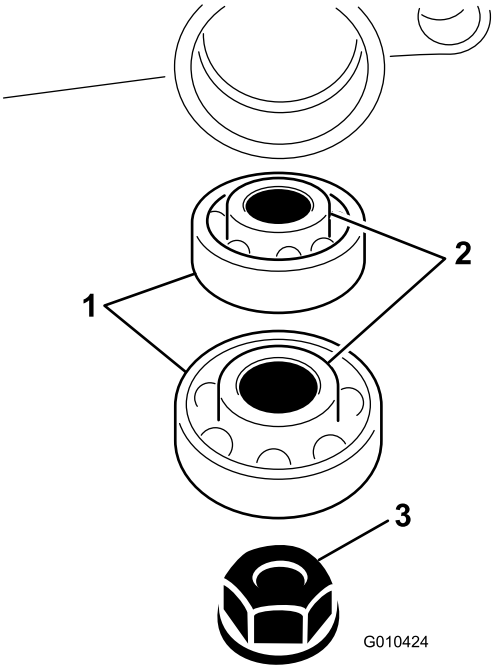

Figure 10

1. Bearing
2. Bearing race
3. Nut

11. Secure the groomer shaft to the groomer housing assembly with a nut (3/8 inch) as shown in Figure 10.
12. While holding the locknut on the other side of the groomer shaft, torque the nuts to 23 to 28 N-m (17 to 21 ft-lb).

    Important: Do not overtighten the nuts.

13. Apply thread-locking compound to the threads on the cap plug.
14. Thread the cap plug into the groomer housing (Figure 11).

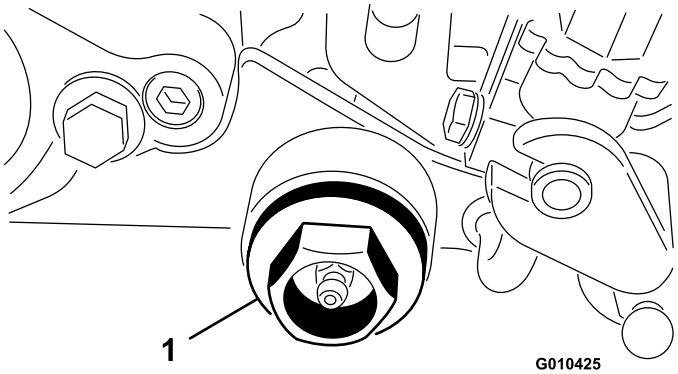

Figure 11

1. Cap plug

15. Torque the cap plug to 81 to 108 N-m (60 to 80 ft-lb).

Installing the Left and Right Adjuster-Arm Assemblies

1. Apply grease to the internal spline and outer surface of the pulley assembly (Figure 12).

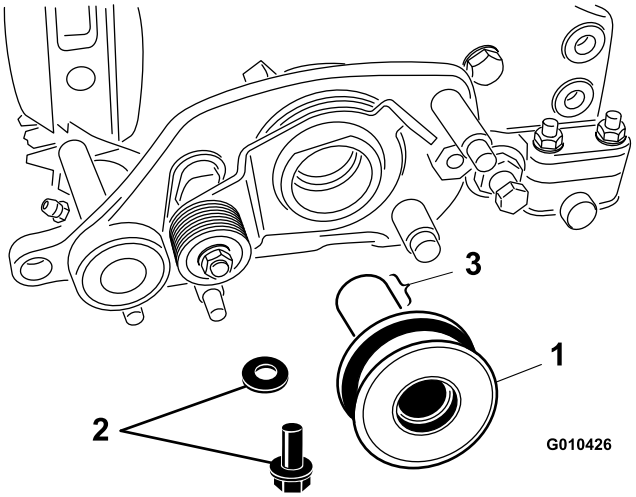

Figure 12

1. Pulley assembly
2. Bolt and washer
3. Apply grease here.

2. Apply anti-seize to a bolt.
3. Secure the pulley assembly to the reel shaft with a bolt (M6–1 x 20 mm) and washer (Figure 12).
4. Torque the bolt to 11.3 N-m (100 in-lb).
5. Insert a bushing into the hole in the left drive assembly (Figure 13).

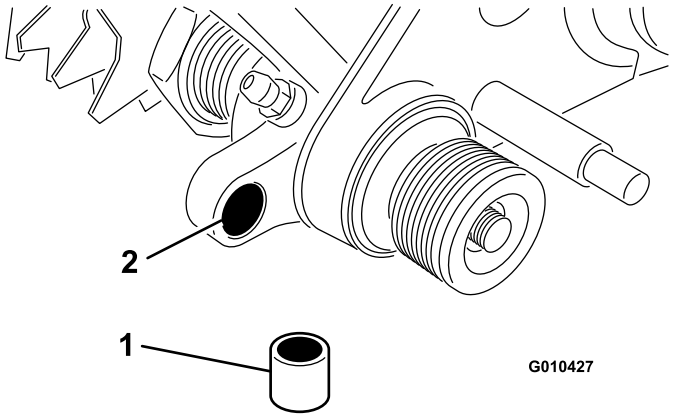

Figure 13

1. Bushing
2. Hole in groomer drive

6. Thread the height-of-cut adjusting bolt into the top of the left adjuster-arm assembly (Figure 14).

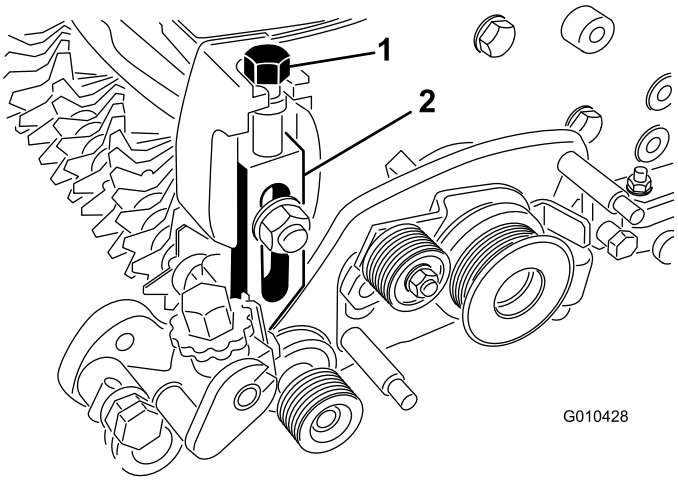

Figure 14

1. Height-of-cut bolt
2. Left adjuster-arm assembly

7. Install the left adjuster-arm assembly to the cutting-unit sideplate using the existing carriage bolt, nut, and washer (Figure 14).

   Note: Make sure that the rod end of the height-of-cut-arm assembly slides into the bushing in the hole in the groomer-drive assembly.

8. Secure the end of adjuster-arm-assembly rod to the groomer-drive assembly with a spring washer and locknut (3/8 inch) as shown in Figure 15.

   Important: Do not overtighten the locknut. The washer should be compressed, but the arm must be free to pivot.

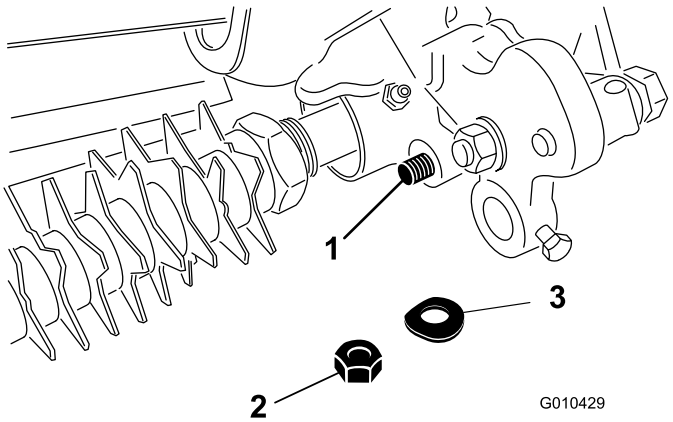

Figure 15

1. Rod end of height-of-cut assembly
2. Locknut
3. Spring washer

9. Insert the roller shaft into the left adjuster-arm assembly and loosely secure it with a bolt (M6–1 x 12 mm) as shown in Figure 16.

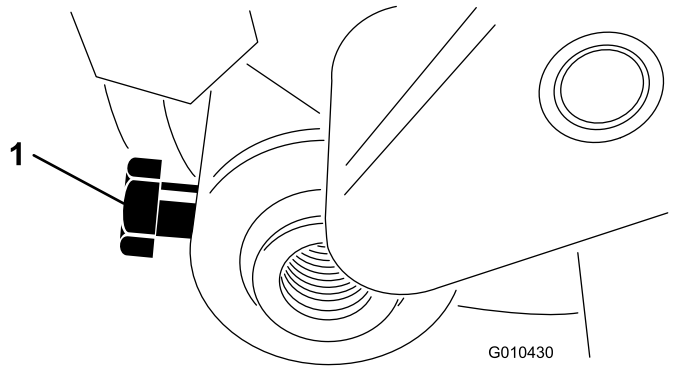

Figure 16

1. Roller-shaft bolt

10. Thread the height-of-cut adjusting screw into the top of the right adjuster-arm assembly (Figure 14).
11. Insert the roller shaft into the right adjuster arm.

    Note: Do not tighten the bolt.
12. Install the right adjuster-arm assembly to the cutting-unit sideplate using the existing carriage bolt, nut, and washer (Figure 14).

    Note: Make sure that the rod end slides into the bushing in the hole in the groomer-drive assembly.
13. Secure the adjuster-arm assembly rod end to the groomer-drive assembly with a spring washer and locknut (3/8 inch) as shown in Figure 15.

Installing the Belt

1. Rotate the idler pulley until you can hook the extension spring into the hole in the pulley bracket and onto the stud as shown in Figure 17.

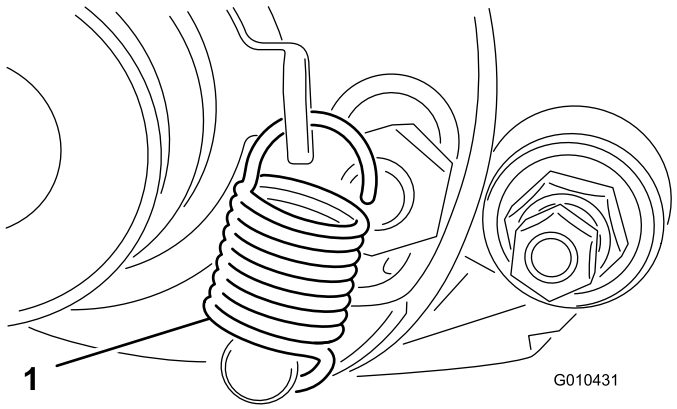

Figure 17

1. Shift-lever spring

2. Insert the belt onto the driven pulley, idler pulley, and pulley assembly as shown in Figure 18.

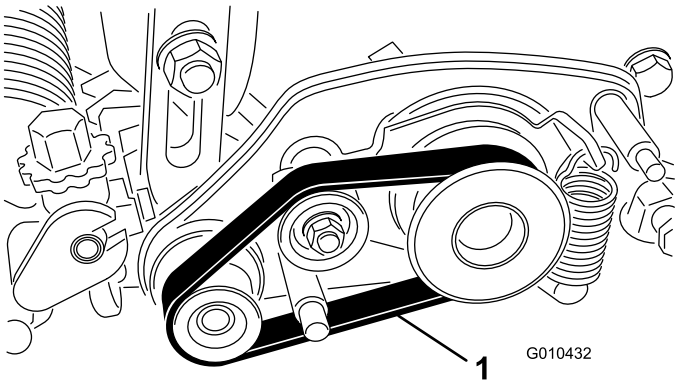

Figure 18

1. Drive belt

Important: Make sure that the belt is centered on the pulleys and in the grooves (Figure 19).

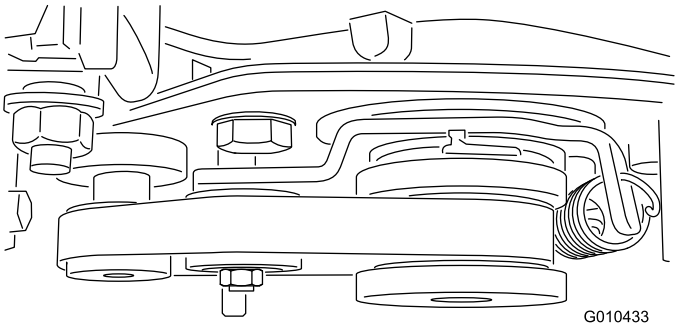

Figure 19

3. Mount the belt cover to the groomer housing assembly with 2 locknuts (M8) as shown in Figure 20.

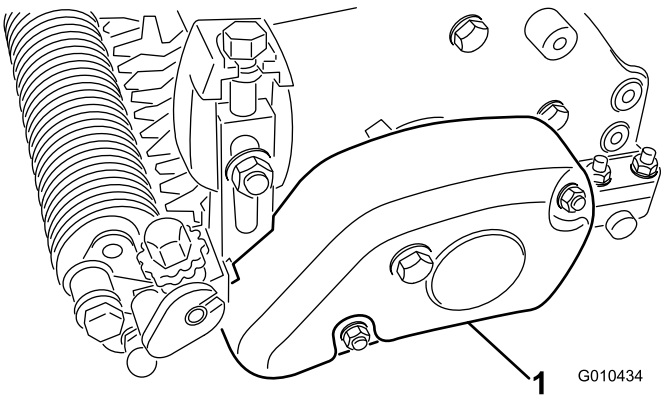

Figure 20

1. Belt cover

4. Center the roller between the adjuster arms and tighten the mounting bolts (see Figure 16).
5. Repeat all procedures for the other cutting units.

Operation

Grooming is performed in the turf canopy above the soil level and promotes vertical growth of grass plants, reduces grain, and severs stolons, producing a denser turf. Grooming produces a more uniform and tighter playing surface for faster and truer action of the golf ball.

Verticutting is a more aggressive cultivation technique designed to remove thatch by cutting through the turf canopy and into the thatch/mat layer. Grooming should not be considered a replacement for verticutting. Verticutting is generally a more rigorous and periodic treatment that can temporarily damage the playing surface, while grooming is a routine and gentler treatment designed to manicure the turf.

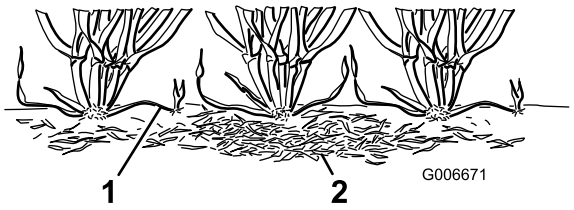

Figure 21

1. Grass runners (stolons) 2. Thatch

Grooming brushes are designed to be less intrusive than conventional grooming blades when adjusted to lightly contact the turf canopy. Brushing may be more beneficial for the ultra-dwarf cultivars, since these grass types have more of a upright growth pattern and do not fill in that well through horizontal growth. Brushes, however, can injure leaf tissue if they are set to penetrate too deeply into the canopy.

Grooming is similar to verticutting in its runner cutting action. Grooming blades however, should never penetrate the soil like verticutting or dethatching. Groomer blades are spaced closer together and are used more often than verticutters so that they are more effective in cutting runners and removing thatch.

Because grooming injures leaf tissue to some degree, avoid grooming during periods of high stress. Do not groom cool-season species, such as creeping bent grass and annual blue grass, during high-temperature and high-humidity periods in midsummer.

It is difficult to make precise recommendations for using grooming reels because so many variables affect the performance of grooming, including the following

- Time of year (i.e., growing season) and weather patterns
- General condition of each green
- Frequency of grooming/cutting—number of cuttings per week and passes per cutting
- Height-of-cut setting on the main reel
- Height/depth setting on the grooming reel
- Length of time that the grooming reel has been in use on the green
- Type of grass on the green
- Overall greens-management program (i.e., irrigation, fertilizing, spraying, coring, over seeding)
- Traffic
- Stress periods (i.e., high temperatures, high humidity, unusually high traffic)

These factors can vary from golf course to golf course and from green to green. It is important, therefore, to inspect the greens frequently and vary the grooming practice in accordance with the need.

The groomer is set at the factory with 13 mm (1/2 inch) blade spacing. The 13 mm (1/2 inch) setting allows you to groom slightly deeper to cut stolons without thinning out the turf excessively. By removing spacers and adding blades or adding spacers and removing blades, you can change the groomer changed to 6 mm or 19 mm (1/4 inch or 3/4 inch) spacing.

Grooming with 6 mm (1/4 inch) blade spacing is recommended for fast-growth periods (spring through early summer) to thin out the top layer of the canopy. Grooming with 19 mm (3/4 inch) blade spacing is recommended for slower growth periods (late summer through fall and winter). During high stress periods it may be desirable to not use the grooming reel.

Note: Grooming with 6 mm (1/4 inch) blade spacing tends to remove more grass blades and thatch and cut more runners than grooming with 13 mm or 19 mm (1/2 inch or 3/4 inch) blade spacing. If you are grooming with 6 mm (1/4 inch) blade spacing, 1 or 2 groomings per week may be sufficient, except during maximum-growth periods.

Note: Continue the practice of changing the direction of cut each time the green is cut when using a groomer. This rotation enhances the effects of the grooming.

Setting the Height/Depth of the Groomer

You can set the groomer-blade height/depth using the following chart, figures, and procedure:

Number of rear-roller spacers required	Height of cut (HOC)	Groomer-arm position	Height of grooming range (HOG)
0	1.5 mm (0.06 inch)	A	0.8 to 1.5 mm (0.03 to 0.06 inch)
	3.0 mm (0.12 inch)	A	1.5 to 3.0 mm (0.06 to 0.12 inch)
	4.8 mm (0.19 inch)	B	2.3 to 4.8 mm (0.09 to 0.19 inch)
	6.4 mm (0.25 inch)	B	3.0 to 6.4 mm (0.12 to 0.25 inch)
1	7.9 mm (0.31 inch)	B	3.8 to 7.9 mm (0.15 to 0.31 inch)
	9.7 mm (0.38 inch)	B	4.6 to 9.7 mm (0.18 to 0.38 inch)
2	11.2 mm (0.44 inch)	B	5.3 to 11.2 mm (0.21 to 0.44 inch)
	12.7 mm (0.50 inch)	B	6.4 to 12.7 mm (0.25 to 0.50 inch)
3	15.9 mm (0.625 inch)	B	9.4 to 12.7 mm (0.37 to 0.50 inch)
4	19.1 mm (0.75 inch)	B	12.7 to 15.7 mm (0.50 to 0.62 inch)

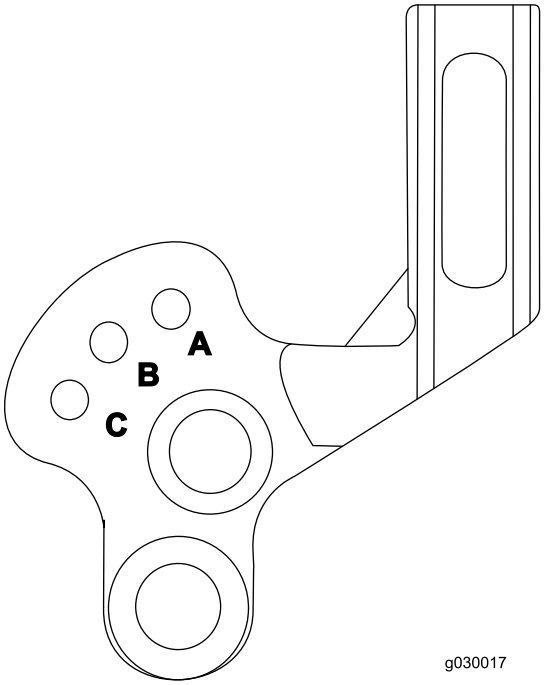

Figure 22

1. Make sure that the rollers are clean and set the main reel to the desired height of cut.
2. Position the machine on a flat, level work surface.
3. Using the chart, determine the amount of rear-roller spacers required to attain the desired grooming height/depth.

Note: If you are installing 3 or 4 spacers on each side of the rear roller, use the longer screws (M6–1 x 60 mm, included in loose parts) instead of the standard screws.

4. Using the chart, determine the position required to attain the desired grooming height/depth. Raise or lower the grooming reel as follows:
   A. Loosen the bolts on the right and left groomer arms (Figure 23).

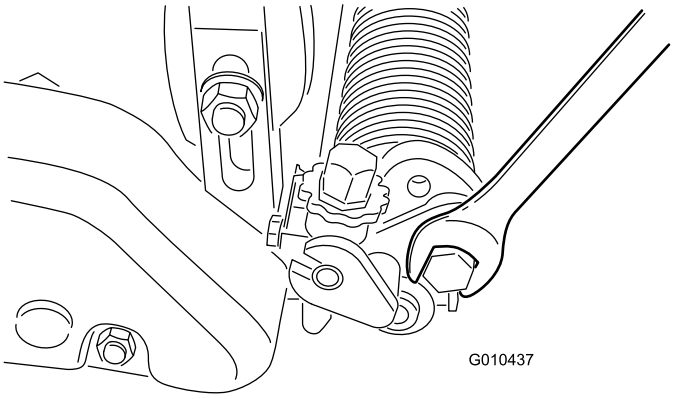

Figure 23

B. Rotate the arms up or down to the A or B position Figure 24).

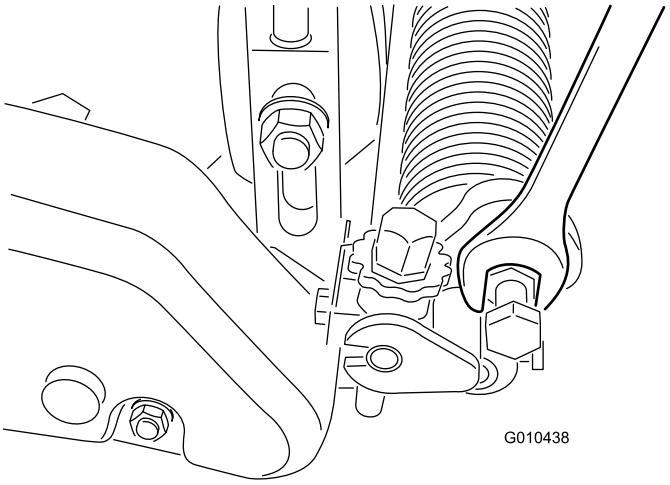

Figure 24

C. Tighten the bolts securing the adjustment.

5. On 1 end of the groomer shaft, measure the distance from the lowest tip of a groomer blade to the work surface.
6. Turn the groomer-height-adjusting knob to raise or lower the blade tip to the desired grooming height (Figure 25).

   Note: Each notch on the adjusting knob is approximately equal to 0.08 mm (0.003 inch) of groomer depth.

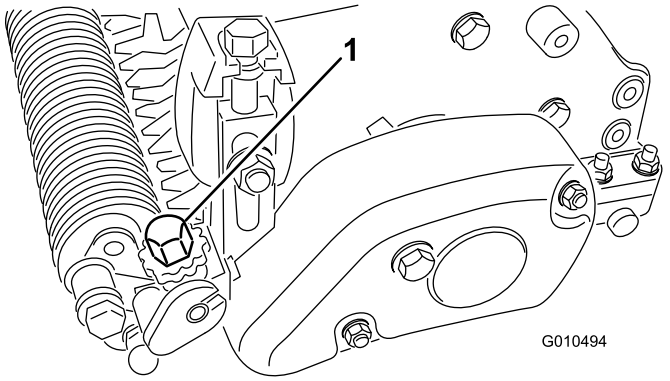

Figure 25

7. Repeat the procedure on the opposite end of the groomer.
8. Check the groomer setting on the first side and adjust as required.
9. If you are not using the grooming mode, raise the grooming reel from the A to B position or from the B to C position.

   Note: At higher grooming heights, the grooming reel may have to be set in the C (transport) position, thus making the raise/lower feature unavailable.

Testing Groomer Performance

Important: Improper or over-aggressive use of the grooming reel (i.e., too deep or too frequent grooming) may cause unnecessary stress on the turf and severely damages greens. Use the groomer cautiously.

It is important to determine the performance of the groomer before putting it into regular use on greens. We strongly suggest that you follow a formal test procedure. The following procedure is a way to determine the proper height/depth setting:

1. Set the cutting reel to the height of cut that would normally be used without a grooming reel.

   Note: Use a Wiehle roller and scraper for the front roller.

2. Set the groomer reel 1/2 of the height-of-cut setting above the roller level.

   Note: For example, to set a 3.2 mm (1/8 inch) height-of-cut, set the groomer at 1.6 mm (1/16 inch) above the roller.

3. Make a pass over the test green, then lower the groomer flush with the roller level and make another pass over the test green.
4. Compare the results.

   Note: The first setting, when the setting was 1/2 the height-of-cut setting above the roller level, should have removed significantly less grass and thatch than the second setting.

5. Check the test green 2 or 3 days after the first grooming for general condition or damage. If the groomed areas are turning yellow or brown, and the non-groomed areas are green, the grooming was too aggressive.

   Note: The color of the grass changes when you use the grooming reel. This can be observed with the first grooming and will continue over time. An experienced greens superintendent can judge by the color of the turf (along with close examination) if the current grooming practice is appropriate for the particular green. Because the groom reel stands up more grass and removes thatch, the quality of cut is not the same as without the groomer. This effect is most noticeable the first few times a groomer is used on a green.

   Note: On multiple passes (i.e., double and triple cutting), the groomer penetrates deeper on each successive pass. Multiple passes are not recommended.

6. After testing the performance of the groomer on a test green and you obtain satisfactory results, you can begin grooming on the playing greens. However, each green may respond differently to grooming. In addition, growing conditions constantly change. Inspect the groomed greens frequently and make adjustments to the grooming procedure as often as necessary.

Using Transport Mode

When transporting the machine, disengage the cutting unit and raise the grooming reel into its transport (raised) position (position C).

Maintenance

Cleaning the Reels

Hose off the grooming reel after use. Do not permit the grooming reel to stand in water, or the components may rust.

Lubricating the Reels

Lubricate the groomer bearings (Figure 26 and Figure 27) weekly or every 10 operating hours, before extended periods of non-use and immediately after every washing. Pump grease into fittings until grease is purged onto the groomer shaft, and wipe excess grease from seals and the shaft.

Note: Operate the groomer for 30 seconds after greasing. Disengage the cutting unit and wipe excess grease from seals and shaft.

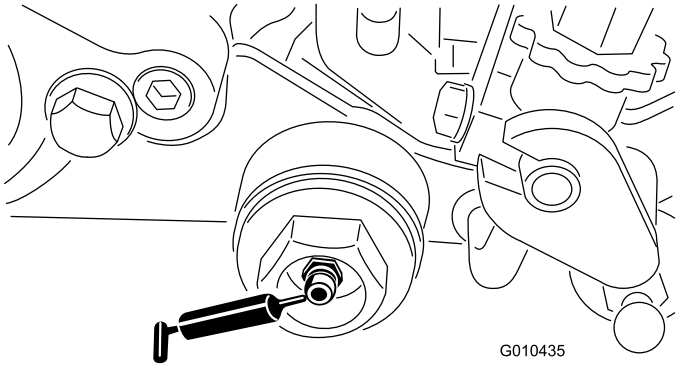

Figure 26

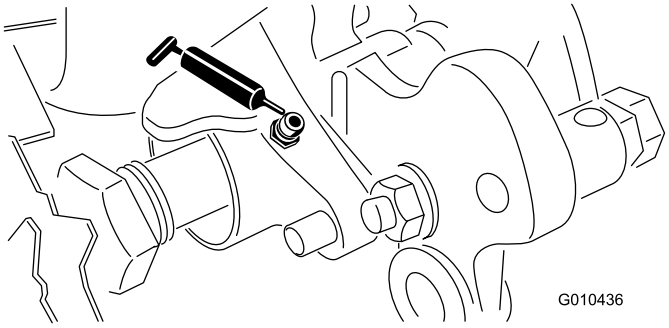

Figure 27

Inspecting the Blades

Inspect the grooming reel blades frequently for damage and wear. Bent blades may be straightened with a pliers. Replace worn blades or reverse the grooming reel shaft reversed to put the sharpest edge of the blade forward. When inspecting the blades, check to see that the right and left blade-shaft end nuts are tight.

Note: Because the groomer may introduce more debris (i.e., dirt and sand) into the cutting unit than what the reel would normally be exposed to, check the bedknife and main reel more frequently. This is especially important in sandy soil and/or when the groomer is set for penetration.

Replacing the Grooming Reel

Remove the grooming reel to replace individual blades, the entire shaft, or to reverse the shaft so that the sharpest edge of the blades are forward. Remove and replace the grooming reel shaft using the following procedure:

1. Remove the belt cover from the groomer housing (Figure 28).

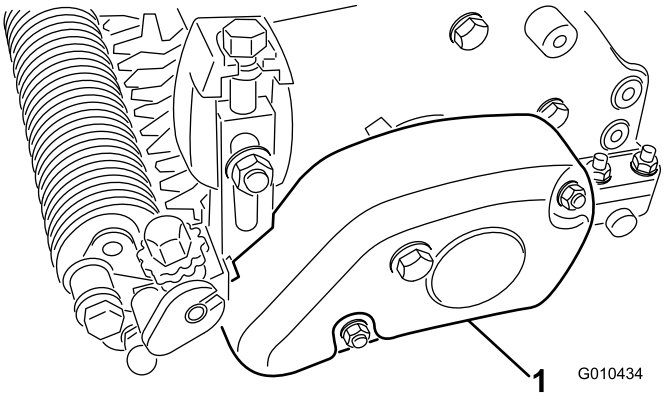

Figure 28

1. Belt cover

2. Remove the belt from the driven pulley, idler pulley, and pulley assembly (Figure 29).

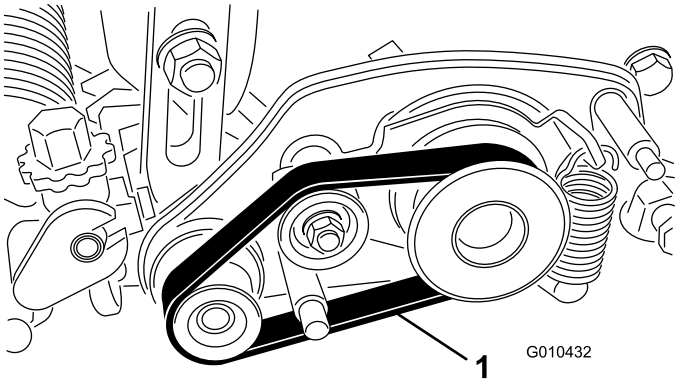

Figure 29

1. Belt

3. Loosen the bolt securing the roller shaft to the height-of-cut arm (Figure 30).

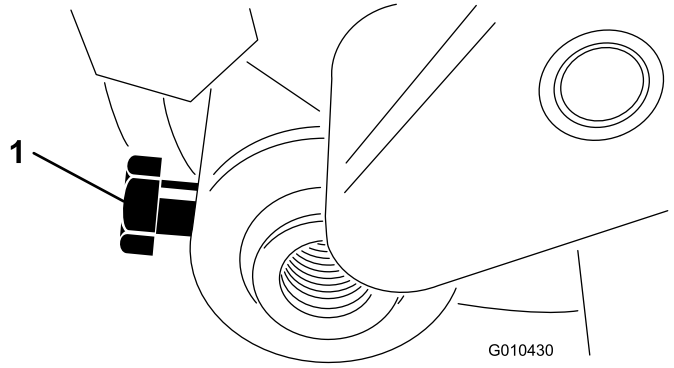

Figure 30

4. Remove the locknut and spring washer securing the height-of-cut-arm-assembly rod end to the groomer-drive assembly (Figure 31).

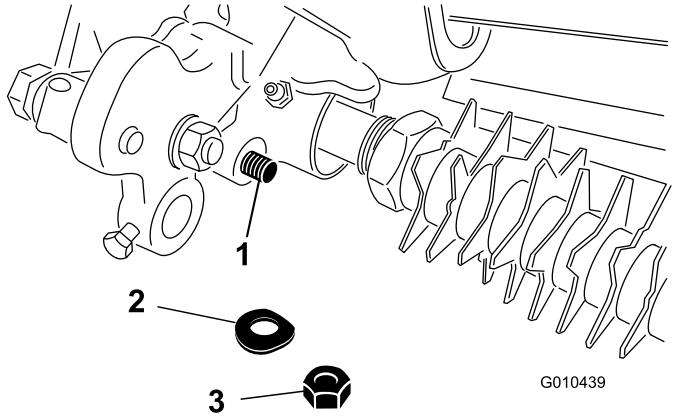

Figure 31

1. Rod end of height-of-cut assembly
2. Spring washer
3. Locknut

5. Remove the carriage bolt, nut, and washer securing the height-of-cut arm assembly to the sideplate (Figure 32).

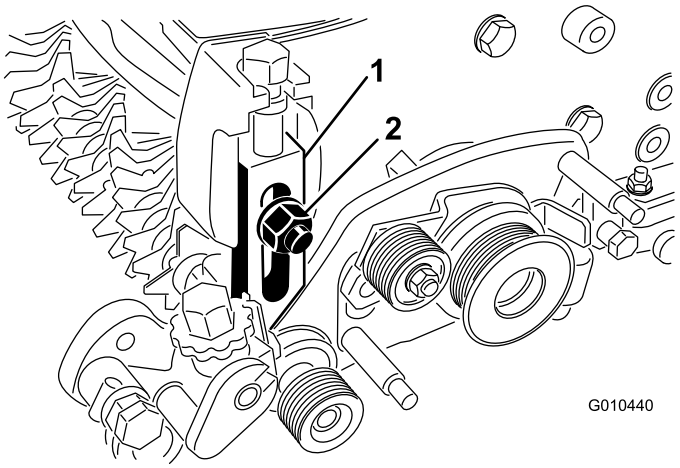

Figure 32

1. Left adjuster-arm assembly
2. Spring washer and locknut

6. Remove the locknut securing the driven pulley to the end of the groomer shaft and remove the pulley (Figure 33).

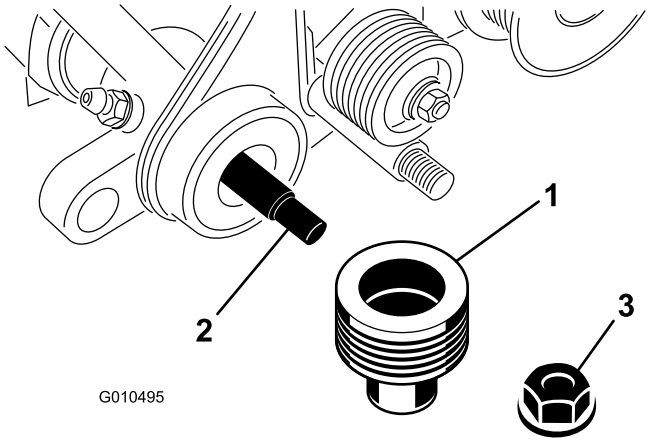

Figure 33

1. Driven pulley
2. Grooming-reel shaft
3. Locknut

7. Remove the groomer-drive pulley from the reel shaft (Figure 34).

   Note: The nut has left threads.

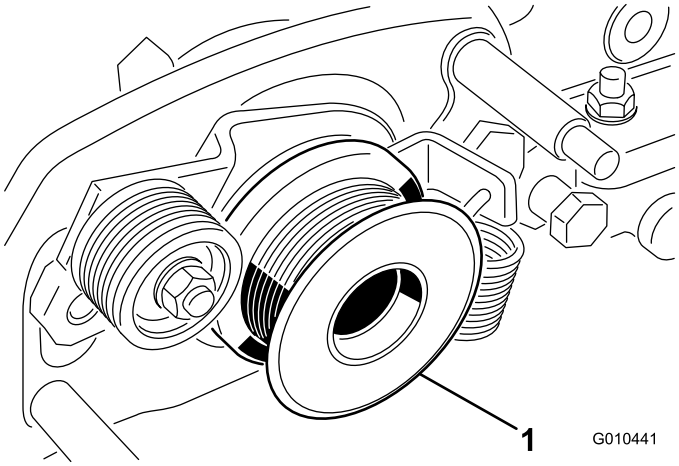

Figure 34

1. Groomer-drive pulley

8. Remove the 2 shoulder nuts securing the groomer-drive assembly to the sideplate adapters (Figure 35).

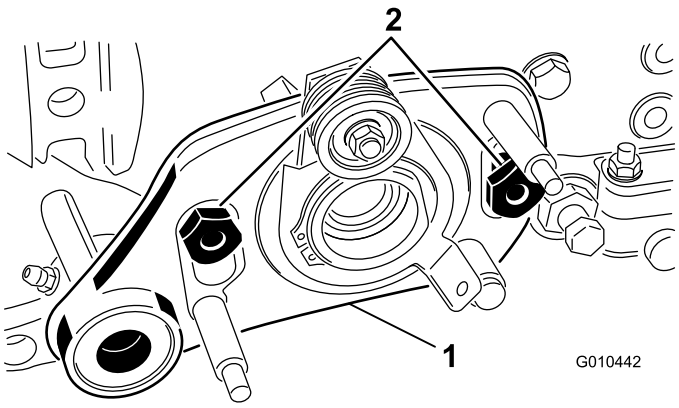

Figure 35

1. Groomer-drive assembly
2. Shoulder nuts

9. Remove the groomer-drive assembly from the bolts.

10. Remove the cap plug from the groomer housing (Figure 36).

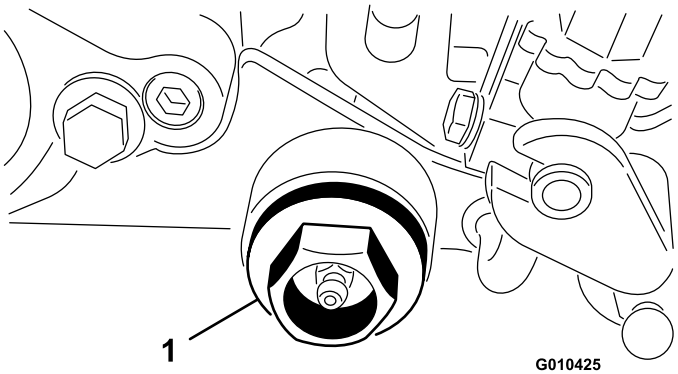

Figure 36

1. Cap plug

11. Remove the nut securing the groomer shaft to the groomer housing.
12. Remove the groomer shaft.
13. Assemble the shaft in reverse order so that the sharpest edge of the blade is forward (Figure 37).

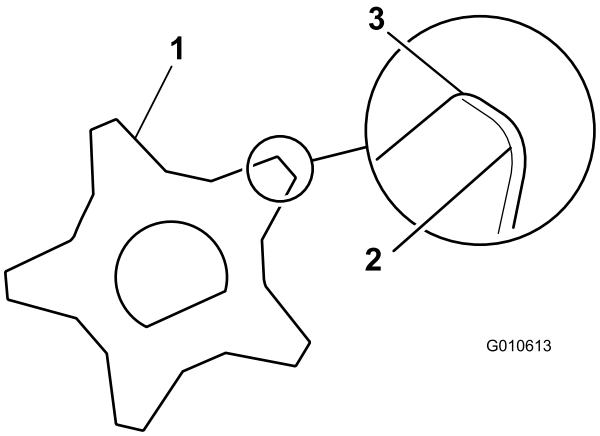

Figure 37

1. Grooming blade
2. Dull (rounded) blade
3. Sharp edge

14. Torque the locknuts to 22.6 to 28.3 N-m (200 to 250 in-lb).
15. Check the grooming reel height-depth setting.

Notes:

Notes:



Count on it.