Form No. 3395-883 Rev A

TORO®

Count on it.

Operator's Manual

RT1200 Traction Unit

Model No. 25500—Serial No. 315000001 and Up
Model No. 25500A—Serial No. 315000001 and Up
Model No. 25500C—Serial No. 315000001 and Up
Model No. 25500W—Serial No. 315000001 and Up



G029466

Register at www.Toro.com.
Original Instructions (EN)

3395-883 A

⚠ WARNING

CALIFORNIA
Proposition 65 Warning

This product contains a chemical or chemicals known to the State of California to cause cancer, birth defects, or reproductive harm.

Diesel engine exhaust and some of its constituents are known to the State of California to cause cancer, birth defects, and other reproductive harm.

Because in some areas there are local, state, or federal regulations requiring that a spark arrester be used on the engine of this machine, a spark arrester is available as an option. If you require a spark arrester, contact your Authorized Toro Service Dealer.

Spark arresters recommended by Toro for this product are USDA Forestry approved.

Important: This engine is not equipped with a spark arrester muffler. It is a violation of California Public Resource Code Section 4442 to use or operate the engine on any forest-covered, brush-covered, or grass-covered land. Other states or federal areas may have similar laws.

The enclosed *Engine Owner's Manual* is supplied for information regarding the US Environmental Protection Agency (EPA) and the California Emission Control Regulation of emission systems, maintenance, and warranty. Replacements may be ordered through the engine manufacturer.

Introduction

This machine is designed to dig trenches in soil to bury cabling and piping for various applications. It is not intended to cut any other material other than soil and rock.

Read this information carefully to learn how to operate and maintain your product properly and to avoid injury and product damage. You are responsible for operating the product properly and safely.

You may contact Toro directly at www.Toro.com for product safety and operation training materials, accessory information, help finding a dealer, or to register your product.

Whenever you need service, genuine Toro parts, or additional information, contact an Authorized Toro Service Dealer or Toro Customer Service and have the model and serial numbers of your product ready. Figure 1 illustrates the location of the model and serial numbers on the product. Write the numbers in the space provided.

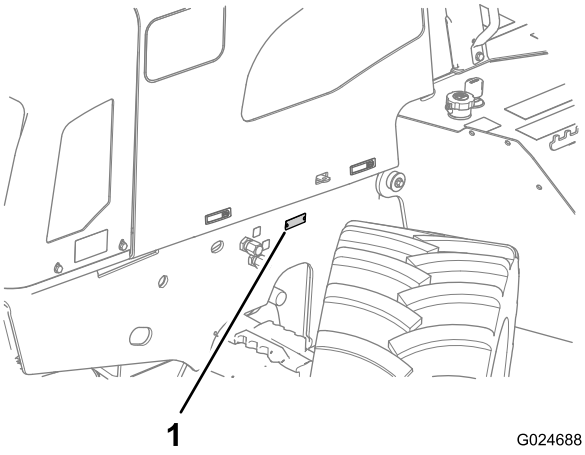

Figure 1

1. Location of the model and serial number plate

Model No. _____

Serial No. _____

This manual identifies potential hazards and has safety messages identified by the safety alert symbol (Figure 2), which signals a hazard that may cause serious injury or death if you do not follow the recommended precautions.

© 2015—The Toro® Company
8111 Lyndale Avenue South
Bloomington, MN 55420

Contact us at www.Toro.com.
Printed in the USA
All Rights Reserved



Figure 2

1. Safety alert symbol

This manual uses 2 words to highlight information. **Important** calls attention to special mechanical information and **Note** emphasizes general information worthy of special attention.

Store this *Operator's Manual* and the engine owners's manual in the manual compartment that is equipped with this machine.

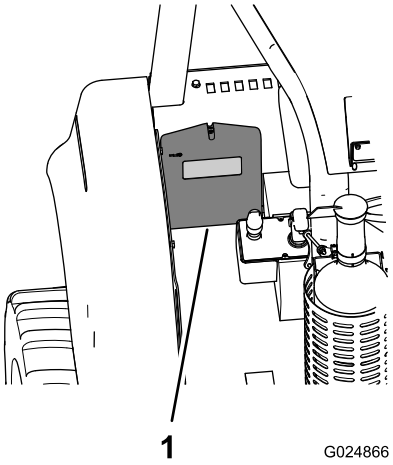

Figure 3

1. Manual compartment

Contents

Safety 4
..... 5
Electrical Line Safety 7
Gas Line Safety 7
Communication Line Safety 7
Water Line Safety 7
Safety and Instructional Decals 8
Product Overview 15
Controls 15
Command Center 15
Machine Controls 16
Traction-Control Cluster 17
Attachment-Control Cluster 17
Operator Seat and Seat Belt 19
Specifications 20
Attachments/Accessories 20
Operation 21
Think Safety First 21
Preparing for Work 21
Adding Fuel to the Engine 21
Checking the Engine-Oil Level 24
Checking the Coolant Level in the Reservoir 25
Checking the Hydraulic-Fluid Level 25
Checking the Restricted Air-Cleaner Indicator 26
Inspecting the Machine 26
Operating the Command Center 26
Operating the Engine 33
Operating the Machine in Extreme Conditions 34
Operating the Parking Brake 35
Driving and Stopping the Machine 35
Operating the Transmission 37
Operating the Machine Tilt Feature 37
Preparing to Operate the Machine 38
Using the Power Port 39
Transporting the Machine 39
Completing the Work for the Day 40
Completing the Project 40
Maintenance 41
Recommended Maintenance Schedule(s) 41
Premaintenance Procedures 42
General Safety 42
Lubrication 42
Greasing the Machine 42
Engine Maintenance 44
Accessing the Engine 44
Servicing the Engine Oil and Filter 45
Checking the Crankcase Breather Tube 47
Checking the Charge-air Piping 47
Servicing the Air-cleaner System 47
Fuel System Maintenance 49
Servicing the Fuel System 49
Electrical System Maintenance 52
Maintaining the Battery 52
Replacing a Fuse 54
Drive System Maintenance 55

Servicing the Tires 55
Servicing the Axles 56
Servicing the Transmission 60
Cooling System Maintenance 63
Servicing the Cooling System 63
Belt Maintenance 67
Servicing the Engine Drive Belt 67
Replacing the Engine Drive Belt 67
Hydraulic System Maintenance 68
Servicing the Hydraulic System 68
ROPS Maintenance 72
Checking and Servicing the ROPS 72
Welding on the Machine 73
Preparing to Disconnect the Components 73
Disconnecting the Alternator Wiring 74
Disconnecting the Computer-module Connectors 74
Connecting the Computer-module Connectors 74
Connecting the Alternator Wiring 75
Closing the Machine 75
Cleaning 75
Removing Dirt and Debris from the Machine 75
Storage 76
Preparing for Seasonal Storage 76
Troubleshooting 77

Safety

Improperly using or maintaining this machine can result in injury. To reduce the potential for injury, comply with these safety instructions and always pay attention to the safety alert symbol (Figure 2), which means **Caution, Warning, or Danger**—personal safety instruction. **Failure to comply with the instruction may result in personal injury or death.**

Important: This machine was manufactured according to the appropriate regulatory standards in effect at the time of manufacture. Modifying this machine in any way may cause it to be out of compliance with those standards and with the instructions in this *Operator's Manual*. Modifications to this machine should be made only by an Authorized Toro Service Dealer.

⚠ WARNING

Welding, cutting, or drilling parts of the machine could cause them to break during operation, which in turn could result in injury or death.

Do not weld, cut, or drill to repair or to attach items to parts on this machine.

Always follow all safety instructions to avoid serious injury or death.

You can prevent and are responsible for injuries occurring to yourself and to others and for damage to property.

Do not use this machine for applications other than those which are described in this manual.

Before operating this machine, it is your responsibility to know where all utility lines are buried in the project area and to avoid them.

Always ensure that all local utility companies mark the location of their lines. In the USA and Canada, call a "One-call System Directory" service. In the USA, call 811 or your local number. If you do not know your local number, call the national number (USA and Canada only) at 1-888-258-0808. Also, contact any utility companies that are not participants of the "One-call System Directory" service.

Check with local authorities for all laws and regulations that require you to locate and avoid existing utilities.

Refer to the following table for the proper utility line and the corresponding utility line color (USA and Canada only):

Utility Line	Color
Electric	Red
Telecommunication, alarm or signal, cables, or conduit	Orange
Natural gas, oil, steam, petroleum, or other gaseous or flammable material	Yellow
Sewer and drain	Green
Drinking water	Blue
Reclaimed water, irrigation, and slurry lines	Purple
Temporary survey markings	Pink
Proposed excavation limits	White

After locating all the utility lines, carefully dig a hole to the utility line by hand to verify the location and the depth of the line.

Training

- Read the *Operator's Manual* and other training material. If the operator(s) or mechanic(s) cannot read English, it is the owner's responsibility to explain this material to them.
- Become familiar with the safe operation of the equipment, operator controls, and safety signs.
- All operators and mechanics must be trained. The owner is responsible for training the users.
- Never let children or untrained people operate or service the machine. Local regulations may restrict the age of the operator.
- Ensure that you understand the hand signals used on the job site. Follow the instructions of the signal person.

Preparation

- Before using the machine, have the area marked for underground utilities, and do not dig in marked areas. Also, be aware of the location of objects and structures that may not be marked, such as underground storage tanks, wells, and septic systems.
- Evaluate the terrain to determine what accessories and attachments are needed to properly and safely perform the job. Use only accessories and attachments approved by the manufacturer.
- Mark the job site clearly and keep bystanders away.
- Review the job site hazards, safety and emergency procedures, and personnel responsibilities with all workers before beginning the work.
- Wear appropriate clothing, including hard hat, safety glasses, long pants, safety shoes, and hearing protection; some jobs may also require that you wear a reflective vest and/or a respirator. Secure long hair, loose clothing, and jewelry to prevent them from getting tangled in moving parts.
- Before operating the machine with an attachment, ensure that the attachment is properly installed.
- Use extra care when handling fuels. They are flammable and vapors are explosive.
  - Use only an approved container.
  - Do not remove the fuel cap or add fuel with the engine running. Allow the engine to cool before fueling. Do not smoke near the machine while the engine is running.
  - Do not refuel or drain the machine indoors.
- Check that the operator's presence controls, safety switches, and shields are attached and functioning properly. Do not operate the machine unless these controls, switches, and shields are functioning properly.

General Operation

- Always wear the seat belt when operating this machine.
- Do not run the engine in an enclosed area.
- Do not operate the machine without all of the guards and panels securely in place. Ensure that all interlocks are attached, adjusted correctly, and functioning properly.
- Decrease the ground speed of the machine and use caution when making turns and crossing roads and rough or uneven terrain.
- Do not operate the machine while under the influence of alcohol or drugs.
- Ensure that the area is clear of other people before operating the machine. Stop the machine if anyone enters the area.
- Excessive vibration from a trencher or a plow can cause a trench, an overhang, or a high bank to collapse, resulting in possible injury or death.
- If your view of the work area is not clear, always have a signal person direct the movement of the machine.
- Do not leave a running machine unattended. Stop the engine and remove the key whenever you leave the machine.
- Use only Toro-approved attachments. Attachments can change the stability and the operating characteristics of the machine.
- Watch for traffic when operating the machine near or across roadways.
- Only operate the machine in areas where there are no obstacles in close proximity to you. Failure to maintain an adequate distance from trees, walls, and other barriers while operating the machine may result in injury and/or damage. Operate the machine only in areas where there is sufficient clearance for you to safely maneuver the machine.

- Locate the pinch point areas that are marked on the machine and attachments; keep hands and feet away from these areas.
- Lightning can cause severe injury or death. If lightning is seen or thunder is heard in the area, do not operate the machine; seek shelter.

Slope Operation

- Avoid operating this machine on slopes, if possible.
- Keep all movements on slopes slow and gradual. Do not make sudden changes in speed or direction.
- Avoid starting or stopping the machine on a slope. If the machine loses traction, keep the heavy end of the machine uphill and proceed slowly, straight down the slope.
- Avoid turning the machine on slopes. If you must turn, turn slowly and keep the heavy end of the machine uphill.
- Do not operate the machine near drop-offs, ditches, or embankments. The machine could suddenly turn over if a tire or track goes over the edge of a cliff or ditch, or if an edge caves in.

Rollover Protection Structure (ROPS) System

- Before operating the machine, ensure that the seat belt is in good condition and is securely attached to the machine.
- Inspect the ROPS at the interval recommended in this manual or when the ROPS has been in an accident.
- Replace a damaged ROPS using only genuine Toro replacement parts; do not repair or modify the ROPS.
- Check carefully for overhead clearances (i.e. branches, doorways, electrical wires) before driving under any objects, and do not contact them.
- Do not remove the ROPS except when replacing it.
- Do not add weight to the machine that exceeds the gross weight displayed on the ROPS label.

Transporting Safety

When you transport the machine to or from the job site, observe the following safety precautions:

- Do not carry passengers on the machine.
- Keep all bystanders away while you are moving the machine.
- Use care when loading or unloading the machine into a trailer or truck.
- Watch for traffic when you are crossing roadways with the machine.
- Check for overhead clearances (i.e., branches, doorways, electrical wires) before driving under any objects, and do not contact them.

Maintenance and Storage

- Lower the attachment(s), stop the engine, wait for all moving parts to stop, and remove the key whenever you adjust, clean, or repair the machine.
- Do not touch parts that may be hot from operation. Allow them to cool before attempting to maintain, adjust, or service the machine.
- Clean debris from all attachments, drives, mufflers, and the engine to help prevent fires. Clean up oil and fuel spills.
- Let the engine cool before storing the machine, and do not store it near an open flame.
- Park the machine on level ground.
- Do not allow untrained personnel to service the machine.
- Use jack stands to support components when required.
- Carefully release pressure from components with stored energy.
- Keep hands and feet away from moving parts. If possible, do not make adjustments with the engine running.
- Keep all parts in good working condition and all hardware tightened. Replace all worn or damaged decals.
- Keep nuts and bolts tight. Keep all equipment in good condition.
- Do not tamper with safety devices.
- Use extra care when handling fuels. They are flammable and vapors are explosive.
  - Use only an approved container.
  - Do not remove the fuel cap or add fuel when the engine is running. Allow the engine to cool before refueling. Do not smoke while fueling the machine.
  - Do not refuel the machine indoors.
  - Do not drain the fuel indoors.
  - Do not store the machine or a fuel container inside where there is an open flame, such as near a water heater or furnace.
  - Do not fill a container while it is inside a vehicle, trunk, pickup bed, or any surface other than the ground.
  - Keep the container nozzle in contact with the tank during filling.
- Use only genuine Toro replacement parts.
- Disconnect the battery before making any repairs. Disconnect from the negative battery terminal first and from the positive battery terminal last. Connect to the positive terminal first and to the negative terminal last.
- Charge the battery in an open, well-ventilated area, away from spark and flames. Unplug the charger before connecting or disconnecting it from the battery. Wear protective clothing and use insulated tools.
- Battery acid is poisonous and can cause burns. Avoid contact with skin, eyes, and clothing. Protect your face, eyes, and clothing when working with a battery.

- Battery gases can explode. Keep cigarettes, sparks, and flames away from the battery.
- Keep your body and hands away from pinhole leaks or nozzles that eject high-pressure hydraulic fluid. Use cardboard or paper to find hydraulic leaks; never use your hands. Hydraulic fluid escaping under pressure can penetrate skin and cause injury, requiring surgery within a few hours by a qualified surgeon; otherwise, gangrene may result.
- Allow the machine to cool before storing it.

Electrical Line Safety

⚠ WARNING

If you leave the seat of the machine or touch any part of the machine when it is charged with electricity, serious injury or death could result.

Do not leave the seat of the machine if the machine is charged with electricity.

Important: In the event the machine becomes electrically charged, immediately contact the proper emergency and utility authorities to secure the area. If you are operating the machine and it becomes electrically charged, do not leave the seat until the source of electrical energy is removed from the machine. Keep other people away from the machine if it is electrically charged.

Note: It is possible to strike a utility line without the machine becoming charged.

- It is likely (but not always the case) that the power-source interrupter or breaker will trip, but to ensure your safety, always assume that the machine may be conducting electricity.

  Note: You will be safe as long as you do not leave the seat of the machine.

- Touching any part of an electrically charged machine while you are on the ground may cause a severe electric shock.

  Note: Do not allow another individual to touch or approach the machine when it is charged.

Gas Line Safety

⚠ WARNING

If you damage a gas line, an immediate explosion and fire hazard could occur. Leaking gas is both flammable and explosive and may cause serious injury or death.

- **Do not smoke while operating the machine.**
- **Shut off the machine and remove the key.**
- **Remove all individuals from the work area.**
- **Immediately contact the proper emergency and utility authorities to secure the area.**

Communication Line Safety

⚠ CAUTION

If you damage the fiber optic cable and look into the exposed highly-intense light, you may harm your eyes.

- **Shut off the machine and remove the key.**
- **Remove all individuals from the work area.**
- **Immediately contact the proper emergency and utility authorities to secure the area.**

Water Line Safety

If you damage a water line, a potential flood hazard could occur.

- **Shut off the machine and remove the key.**
- **Remove all individuals from the work area.**
- **Immediately contact the proper emergency and utility authorities to secure the area.**

Safety and Instructional Decals

Safety decals and instructions are easily visible to the operator and are located near any area of potential danger. Replace any decal that is damaged or lost.

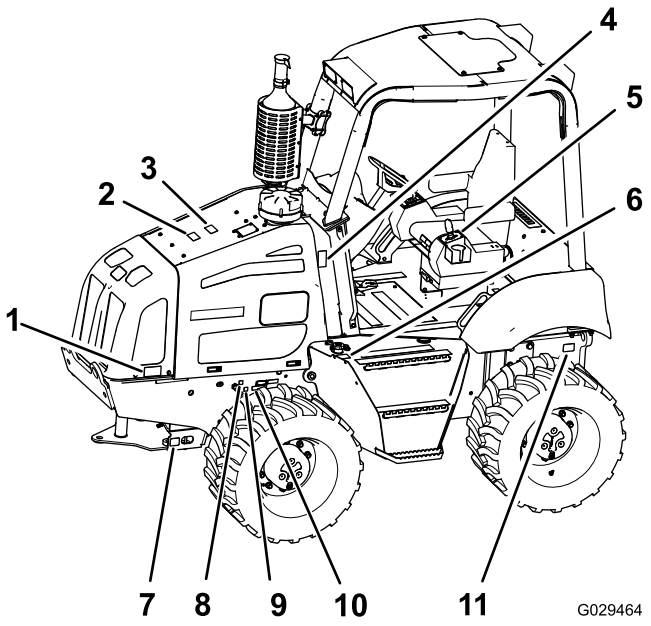

Figure 4

1. Decal 125-6689
2. Decal 125-4963
3. Decal 125-8479
4. Decal 125-8480
5. Decal 125-8499
6. Decal 125-6135
7. Decal 125-6694 (2 decals, 1 on each side)
8. Decal 125-8481
9. Decal 125-8482
10. Decal 117-2718
11. Decal 125-6139

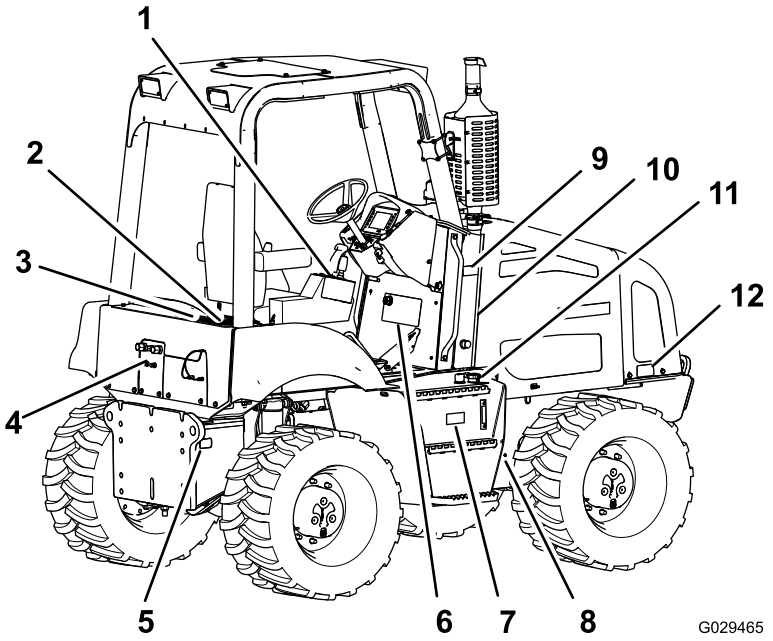

Figure 5

1. Decal 125-8496
2. Decal 125-8473 (on the floor panel covering the battery)
3. Decal 125-8495
4. Decal 127-1828
5. Decal 125-6139
6. Decal 130-7540
7. Decal 125-4963
8. Decal 127-1829
9. Decal 125-8480
10. Decal 125-6157 (under the left-side cowl)
11. Decal 125-8483
12. Decal 125-6689

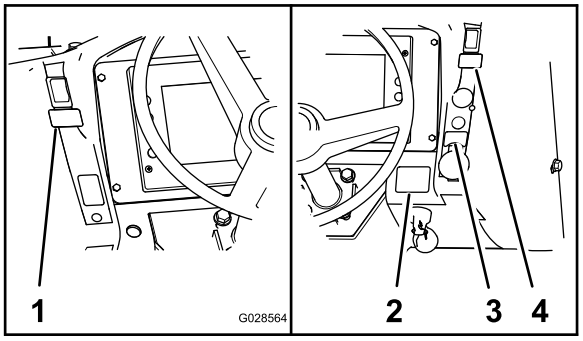

Figure 6

1. Decal 131–0439
2. Decal 130-7539
3. Decal 125-8484
4. Decal 131–0440



117-2718

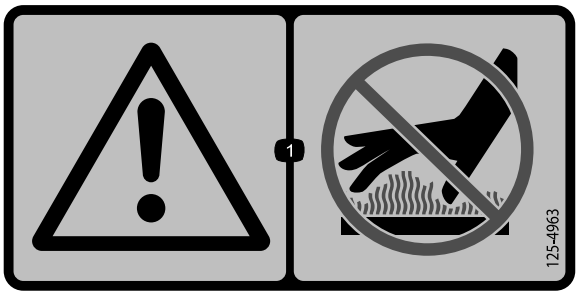

125-4963

1. Warning—do not touch hot surfaces.

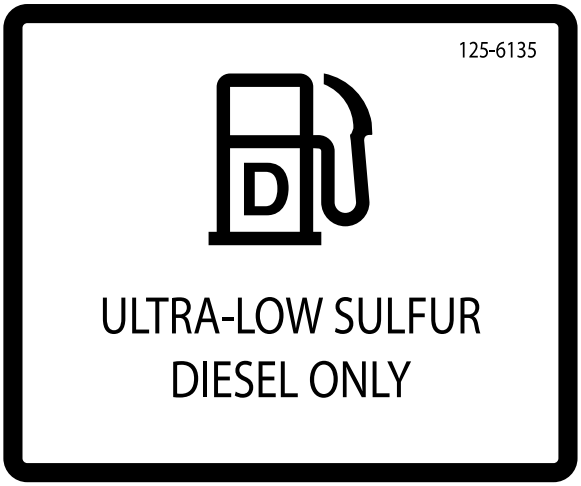

125–6135

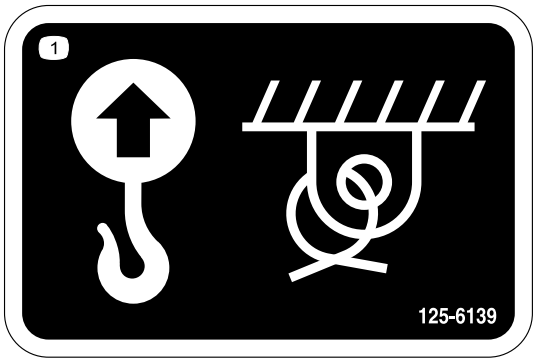

125–6139

1. Lift point; tie down point

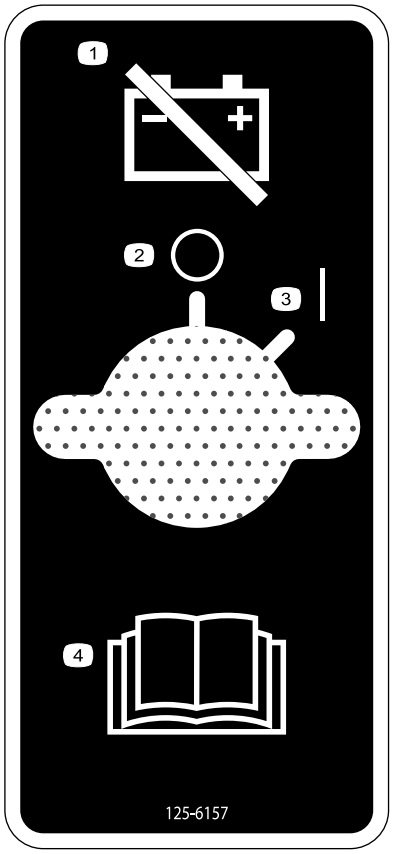

125-6157

1. Disconnect the battery power.
2. Off/Stop
3. On/Start
4. Read the *Operator's Manual*.

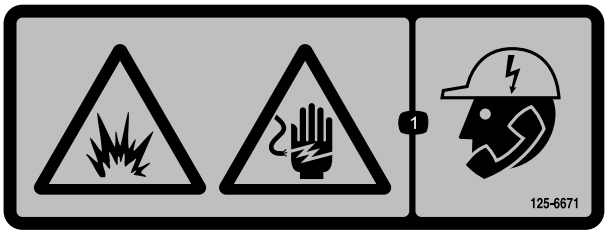

125-6671

1. Explosion hazard; electric shock hazard—call local utilities before digging.

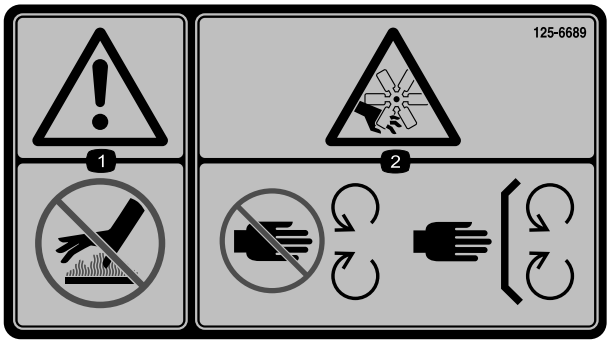

125-6689

1. Warning—keep away from hot surfaces.
2. Cutting/dismemberment hazard, fan—keep away from moving parts; keep all guards and safety devices in place.

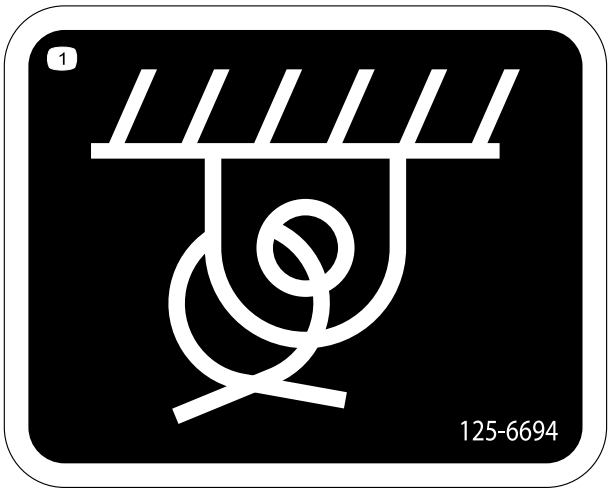

125-6694

1. Tie-down point



125–8473

1. Explosion hazard—wear eye protection.
2. Caustic liquid/chemical burn hazard—rinse affected area and seek medical assistance.
3. Fire hazard—keep open flames away.
4. Poison hazard—do not tamper with the battery.

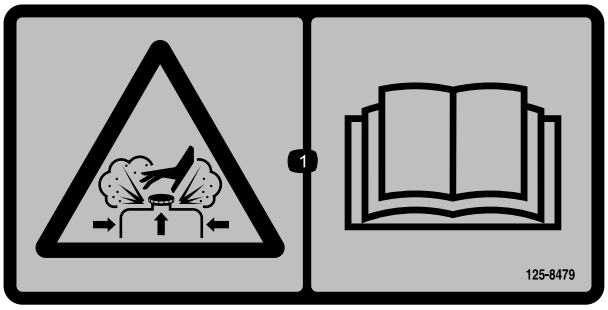

125-8479

1. Burn hazard from contents under pressure—read the *Operator's Manual*.

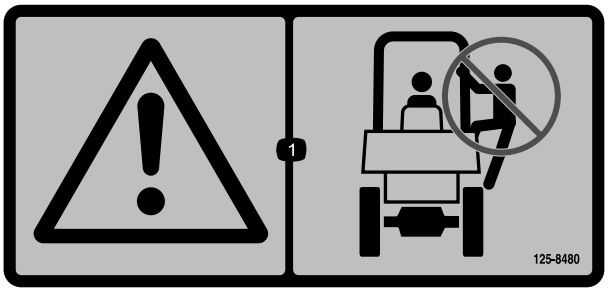

125-8480

1. Warning—no riders



125-8481

1. Hydraulic supply



125-8482

1. Hydraulic return

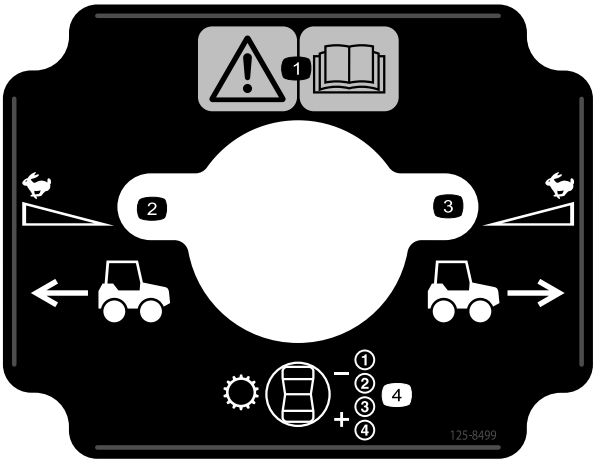

125-8499

1. Warning—read the *Operator's Manual*.
2. Reverse
3. Forward
4. Transmission—gear selection

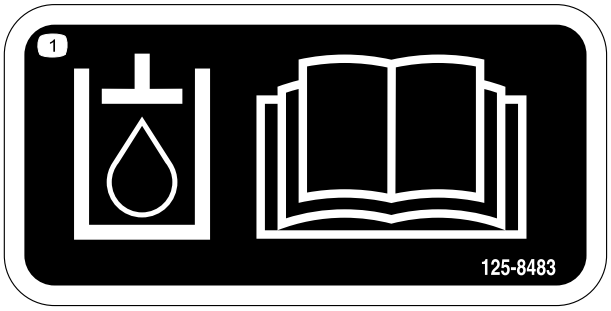

125–8483

1. Hydraulic fluid; read the *Operator's Manual*.

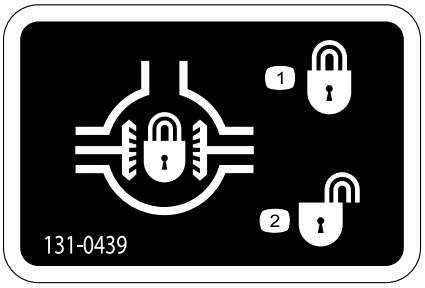

131-0439

1. Differential—lock
2. Differential—unlock

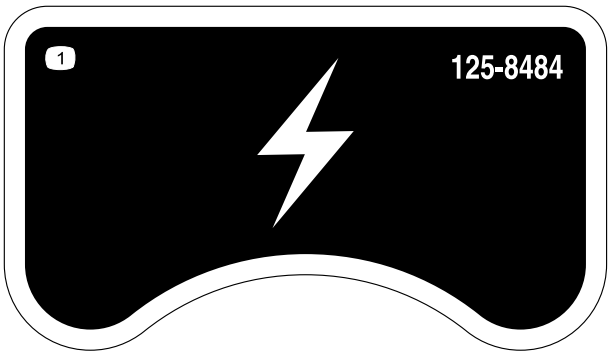

125-8484

1. 12-volt receptacle

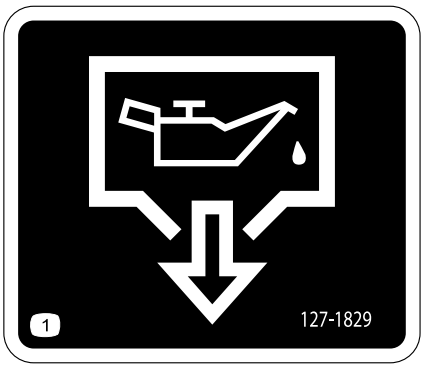

127-1829

1. Oil drain

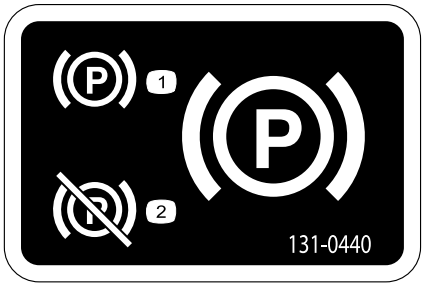

131-0440

1. Parking brake—engage
2. Parking brake—disengage

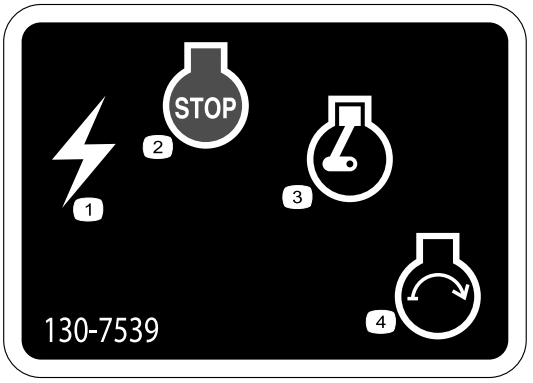

130-7539

1. Electrical power
2. Engine—stop
3. Engine—run
4. Engine—start

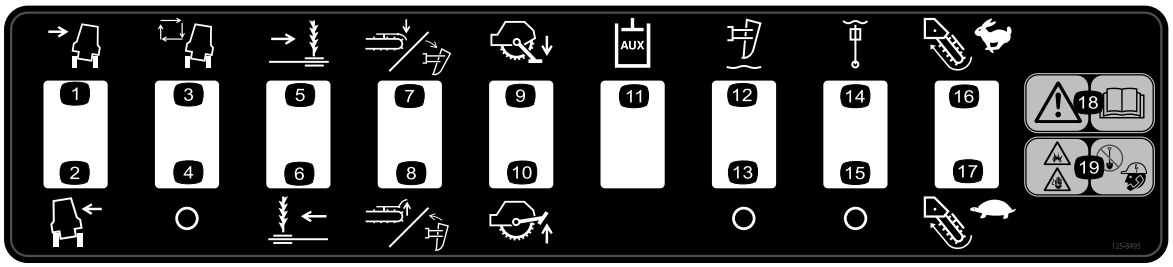

125-8495

1. Tilt the machine right
2. Tilt the machine left
3. Auto frame leveling on (optional kit)
4. Auto frame leveling off (optional kit)
5. Sideshift—right (optional attachment)
6. Sideshift—left (optional attachment)
7. Lower the crumber/rotate the plow forward (optional attachment)
8. Raise the crumber/rotate the plow backward (optional attachment)
9. Rock saw stabilizer—lower (optional accessory)
10. Rock saw stabilizer—raise (optional accessory)
11. Auxiliary hydraulic (optional kit)
12. Vibratory plow depth—float on (optional accessory)
13. Vibratory plow depth—float off (optional accessory)
14. Vibratory plow swing—float on (optional accessory)
15. Vibratory plow swing—float off (optional accessory)
16. Trencher—fast rotation (optional accessory)
17. Trencher—slow rotation (optional accessory)
18. Warning—read the *Operator's Manual*.
19. Explosion hazard; electric shock hazard—do not dig before contacting local utility services.

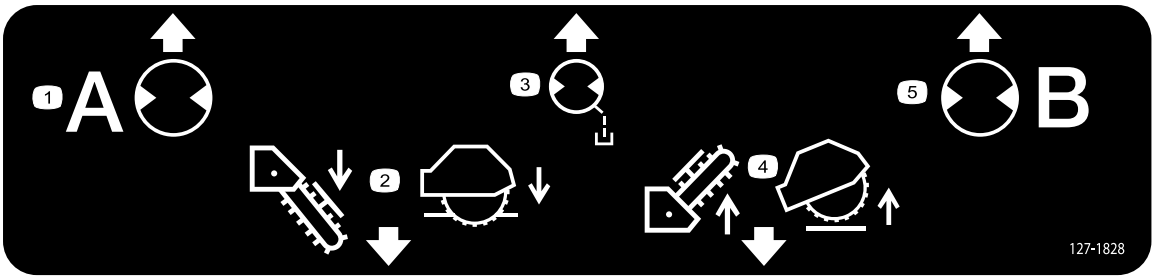

127-1828

1. Hydraulic pressure
2. Lower the attachment.
3. Case drain
4. Raise the attachment.
5. Hydraulic return

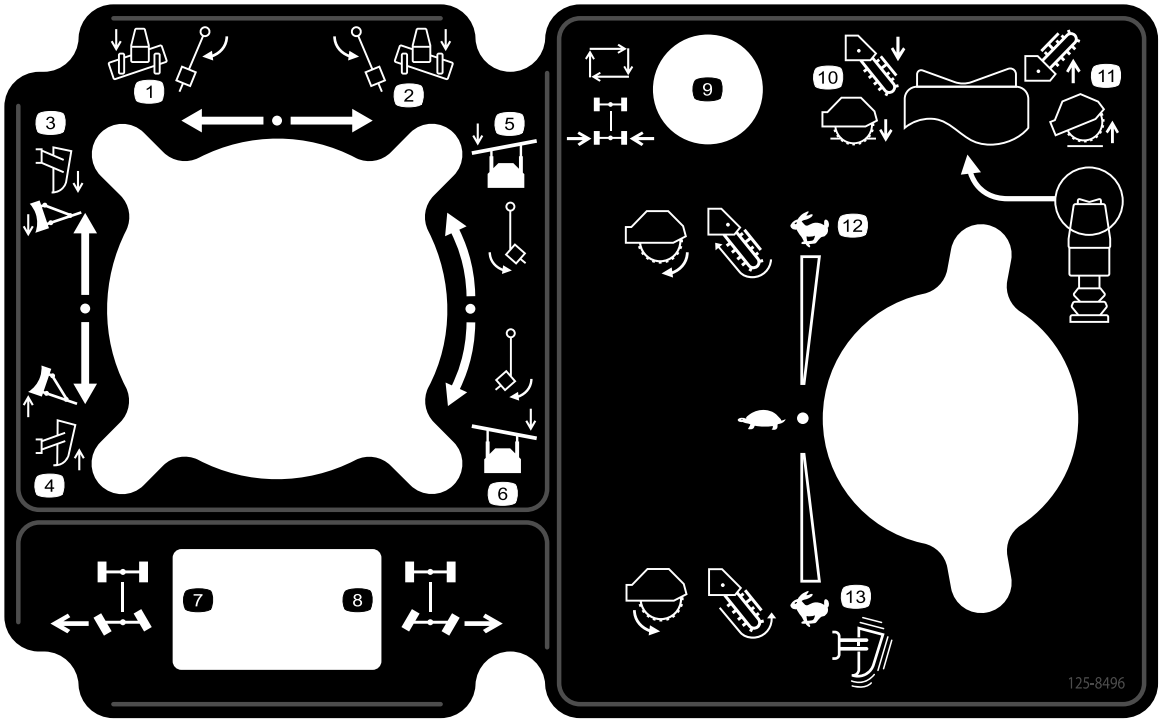

125-8496

1. Backfill blade/vibratory plow—tilt/swing left
2. Backfill blade/vibratory plow—tilt/swing right
3. Backfill blade/vibratory plow—lower
4. Backfill blade/vibratory plow—raise
5. Backfill blade/vibratory plow head—angle left
6. Backfill blade/vibratory plow head—angle right
7. Rear wheel steering—turn the wheels left; machine will turn right
8. Rear wheel steering—turn the wheels right; machine will turn left
9. Rear wheel steering—auto center (optional kit)
10. Lower the attachments
11. Raise the attachments
12. Rear attachment—forward speed
13. Rear attachment—reverse speed

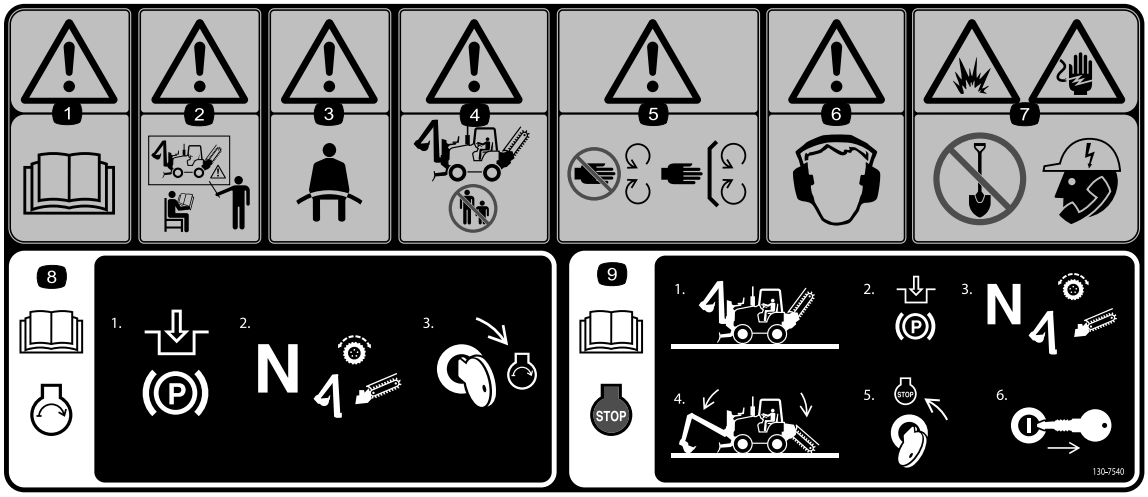

130-7540

1. Warning—read the *Operator's Manual*.
2. Warning—do not operate the machine unless you have received instruction.
3. Warning—wear a seatbelt.
4. Warning—keep bystanders away from the machine.
5. Warning—keep away from moving parts; keep all guards and shields in place.
6. Warning—wear hearing protection.
7. Explosion hazard; electric shock hazard—before digging call the local utilities service.
8. Read the *Operator's Manual* for information on starting the engine—1) Engage the parking brake; 2) Set the traction drive and all attachments to neutral; 3) Turn the key to the engine start position.
9. Read the *Operator's Manual* for information on stopping the engine—1) Park the machine on a level surface; 2) Engage the parking brake; 3) Set the traction drive and all attachments to neutral; 4) Lower all attachments; 5) Turn the key to the engine stop position; 6) Remove the key from the ignition.

Product Overview

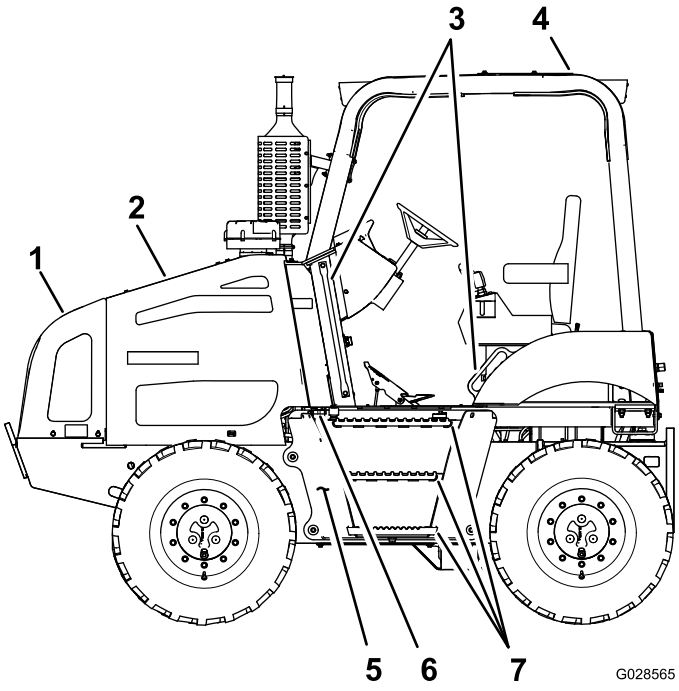

Figure 7

1. Nose panel
2. Left side panel
3. Grab handles
4. ROPS enclosure
5. Fuel reservoir
6. Fuel cap
7. Steps

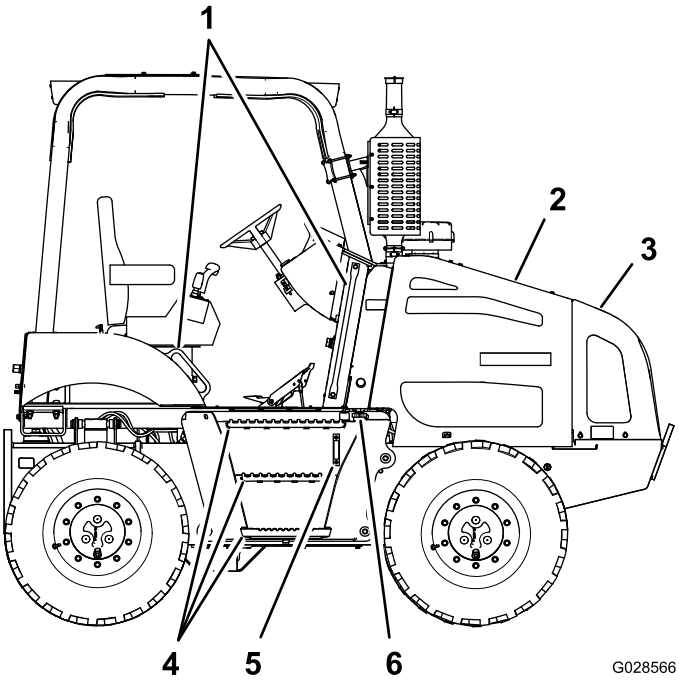

Figure 8

1. Grab handles
2. Right side panel
3. Nose panel
4. Steps
5. Hydraulic-fluid sight gauge
6. Hydraulic-tank cap

Controls

Become familiar with all the controls (Figure 9 through Figure 16) before you start the engine and operate the machine.

Command Center

Home Screen Controls

Use the buttons on the command center to control the operation of machine functions, and to navigate to the machine setup and diagnostic screens (Figure 9).

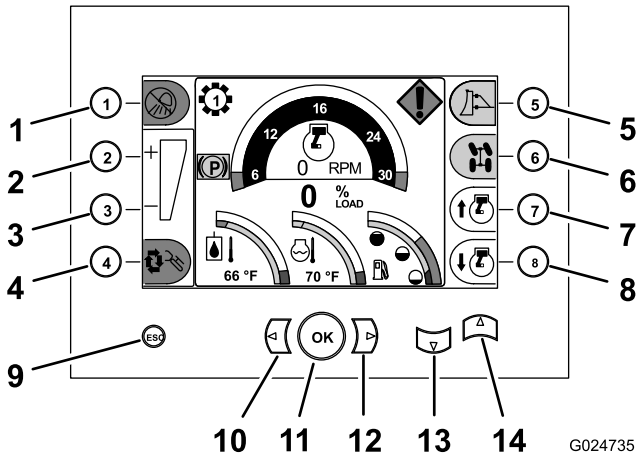

Figure 9

Home screen shown

1. Button 1 (light On/Off button—used with the light kit option)
2. Button 2 (increase the set point for the load control—used with the load-control kit)
3. Button 3 (decrease the set point for the load control—used with the load-control kit)
4. Button 4 (load control On/Off—used with the load-control option)
5. Button 5 (control select—use to determine which attachment the backfill-blade/vibratory-plow joystick operates)
6. Button 6 (advanced-steering mode—used with the advanced-steering kit)
7. Button 7 (increase the engine speed)
8. Button 8 (decrease the engine speed)
9. Escape (used to return to the home screen)
10. Previous screen (used to move to a previous screen function within a screen mode)
11. OK (used to make a selection)
12. Next screen (used to move to the next screen function within a screen mode)
13. Down screen (used to move down to the previous screen mode and enter diagnostic and calibration screens)
14. Up screen (used to move up the next screen mode)

Throttle Button

- **Throttle-up Button**—Press the throttle-up button (button 7), located at the bottom-right corner of the command center, to increase the engine speed (Figure 9).

  Note: Press the button repeatedly to increase the engine speed up to the maximum engine speed (2,450 rpm).

- **Throttle-down Button**—Press the throttle-down button (button 8), located at the bottom-right corner of the command center, to lower the engine speed (Figure 9).

  Note: Press the button repeatedly to decrease the engine speed down to the engine-idle speed (950 rpm).

Machine Controls

Differential-Lock Switch

Use the differential-lock switch to control the transmission of power to all 4 wheels (Figure 10).

- To lock the front and rear differentials—push the switch up.
- To unlock the front and read differentials—stop the machine, push the switch down, and move the machine backward for a short distance.

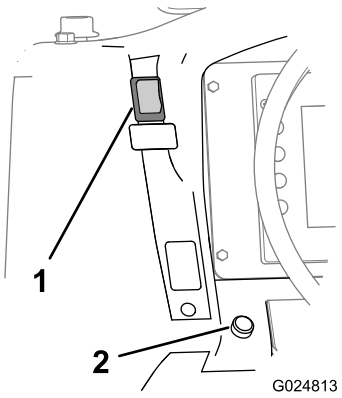

Figure 10

1. Differential-lock switch
2. Horn button (optional)

Parking-Brake Switch

- Set the parking brake by pushing down the parking-brake switch (Figure 11).

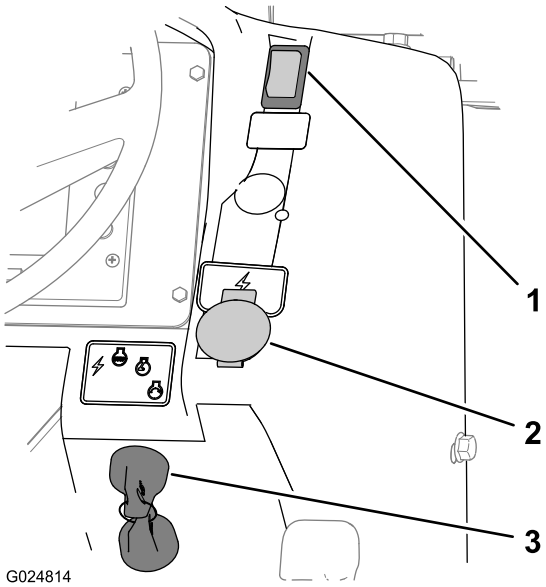

Figure 11

1. Parking-brake switch
2. Power port
3. Key switch

Note: The red parking brake indicator will appear in the command center display (Figure 12).

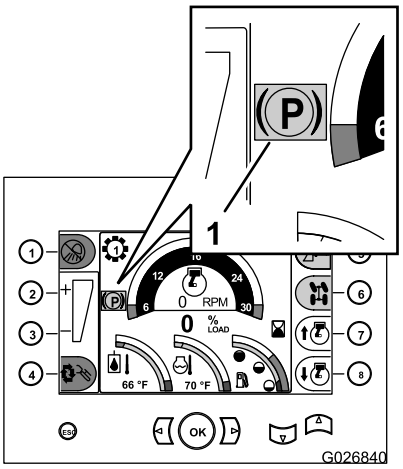

Figure 12

1. Parking brake indicator (command center display)

- Release the parking brake by pushing up the parking-brake switch.

  Note: When the parking brake is released and the machine is moved forward or backward, the Home screen will stop displaying the parking brake indicator.

- If you stop the engine without setting the parking brake, the machine will set the parking brake and the yellow parking brake indicator will appear in the command center display (Figure 12).

Key Switch

Use the key switch to power the electrical accessories, start the machine, and stop the machine (Figure 11). The 4 key-switch positions are as follows:

- **Accessory**—Rotate the key switch to this position to energize the lamp switch circuits.
- **Stop**—Rotate the key switch to this position to stop the engine and de-energize the electrical system.

  Note: Always remove the key before leaving the machine.
- **Run**—This position allows the engine to run and will energize all electrical systems.
- **Start**—Rotate the key switch to this position to start the engine.

  Note: When you release the key, it will automatically go to the Run position.

Foot Pedal

The foot pedal controls the direction and speed of travel of the machine (Figure 13).

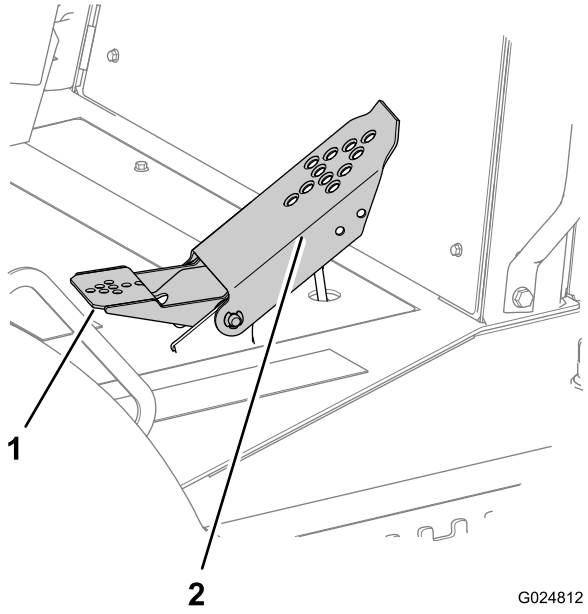

Figure 13

1. Heel pedal (reverse)
2. Toe pedal (forward)

Traction-Control Cluster

The traction-control cluster is located at the operator seat, adjacent to the left armrest.

Utility-Traction Joystick

When trenching, plowing, or boring, use the utility-traction joystick to change the direction and speed of the machine (Figure 14). The further you move the joystick in either direction, the faster the machine will move in the selected direction.

- Move the utility-traction joystick forward to move the machine forward (Figure 14).
- Move the traction joystick rearward to move the machine in reverse (Figure 14).
- Move the traction joystick to the center (Neutral) position to stop the machine (Figure 14).

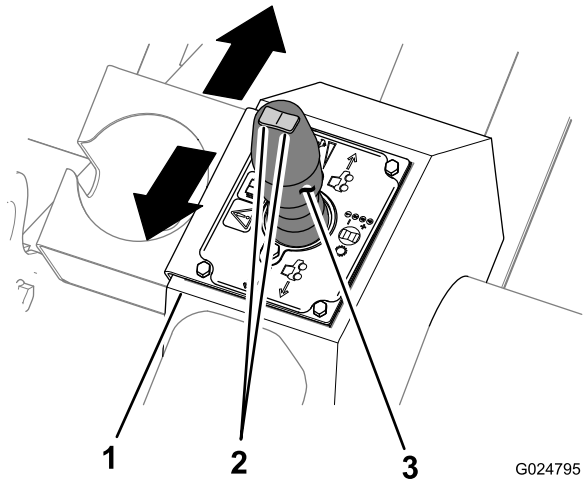

Figure 14

1. Traction-control cluster
2. Gear-selector switch
3. Utility-traction joystick

Note: The engine speed is controlled with the throttle buttons on the home screen of the command-center panel; refer to Throttle Button (page 16).

Gear-Selector Switch

The gear-selector switch is located on top of the utility-traction joystick (Figure 14), and is used to select the transmission gear.

The current gear is displayed on the home screen of the command center, above and to the left of the tachometer display.

Attachment-Control Cluster

The attachment-control cluster is located at the operator seat and is adjacent to the right armrest.

Backfill-Blade / Vibratory-Plow Joystick

Note: The backfill blade and the vibratory plow are optional attachments.

Note: The function of the backfill blade / vibratory plow joystick depends on the attachment selected in the command center.

The backfill-blade/vibratory-plow joystick operates either the backfill blade or the vibratory plow, whichever is selected and displayed on the command center. Move the joystick controls to change the backfill blade or the vibratory plow position as follows:

- Push the joystick forward to lower the backfill blade or vibratory plow or pull the joystick rearward to raise the backfill blade or vibratory plow (Figure 15).

  Note: The function of the joystick depends on the attachment selected in the command center.

- Move the joystick to the left to tilt the backfill blade to the left, or move the joystick to the right to tilt the backfill blade to the right (Figure 15).
- Swing the backfill blade or steer the vibratory plow left or right as follows:
  - Twist the thumb control left to swing the backfill blade left, or twist the thumb control right to swing the backfill blade right (Figure 15).
  - Twist the thumb control left to steer the vibratory plow left, or twist the thumb control right to steer the vibratory plow right (Figure 15).

    Note: The function of the thumb control depends on the attachment selected in the command center.
- Pull the trigger on the joystick to float the backfill blade up and down (Figure 15).

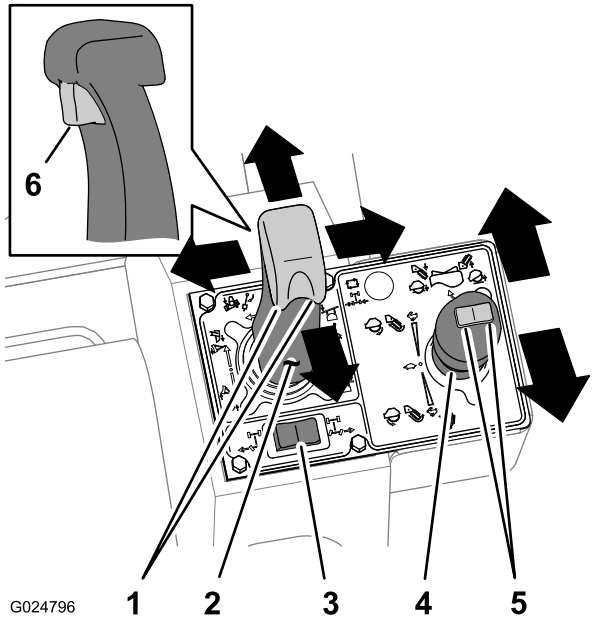

Figure 15

1. Thumb control
2. Backfill blade / vibratory plow joystick
3. Rear-wheel steering switch
4. Vibratory plow / trencher motor joystick
5. Attachment elevation switch
6. Backfill-blade-float trigger

Rear-Wheel-Steering Switch

The switch for the rear-wheel steering is used to control the steering direction (left or right) of the rear wheels. The switch for the rear-wheel steering is located behind the backfill blade/vibratory plow joystick.

Vibratory-Plow / Trencher-Motor Joystick

Note: The vibratory plow and the trencher are optional attachments.

Vibratory Plow

Note: The function of the vibratory plow / trencher motor joystick depends on the attachment selected in the command center.

- Move the joystick rearward to start the vibration of the plow blade (Figure 15).
- Move the joystick further rearward to increase the vibration (Figure 15).
- Move the joystick toward the Neutral position to decrease and stop the vibration (Figure 15).

Trencher

- Move the joystick forward to start the digging chain in the forward direction (Figure 15).
- Move the joystick further forward to increase the chain speed (Figure 15).
- Move the joystick to the Neutral position to stop the trencher chain (Figure 15).

Attachment-Elevation Switch

The attachment-elevation switch raises and lowers an attachment mounted at the rear of the machine.

- Press the switch on the left to lower the attachment boom (Figure 15).
- Press the switch on the right to raise the attachment boom (Figure 15).

Auxiliary-Control Panel

The auxiliary-control panel includes the rocker switch that controls the machine tilt actuator (Figure 16). The panel also has locations for rocker switches that are installed with the optional attachments or kits for the machine.

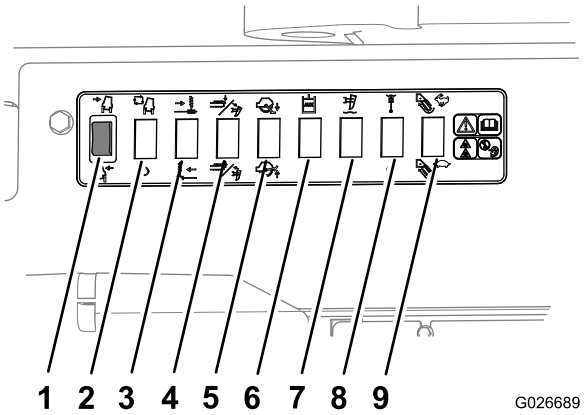

Figure 16

1. Machine tilt—left/right
2. Auto tilt On/Off (reserved for an optional kit)
3. Sideshift left/right (reserved for an optional attachment)
4. Lower/raise the crumber/rotate the plow forward (reserved for an optional attachment)
5. Lower/raise the rock saw stabilizers (reserved for an optional attachment)
6. Auxiliary hydraulic (reserved for an optional attachment)
7. Vibratory plow boom float On/Off (reserved for an optional attachment)
8. Vibratory plow swing float On/Off (reserved for an optional attachment)
9. Trencher speed Fast/Slow (reserved for an optional attachment)

Operator Seat and Seat Belt

Seat-Interlock System

⚠ WARNING

The seat-interlock system protects the operator from injury.

Do not disable the seat-interlock system.

The seat-interlock system requires the operator to sit in the operator seat while operating this machine.

Note: The neutral-indicator light turns on when you turn the key switch to the On position and both the utility-traction-control and attachment-control levers are in the Neutral position.

Note: If the operator does not remain seated when the utility-traction lever is not in the Neutral position, the engine will stop in 1 second. **Do not** lay a heavy object on the seat or tamper with the seat-interlock system in any way.

Seat-Height and Seat-Slide Buttons

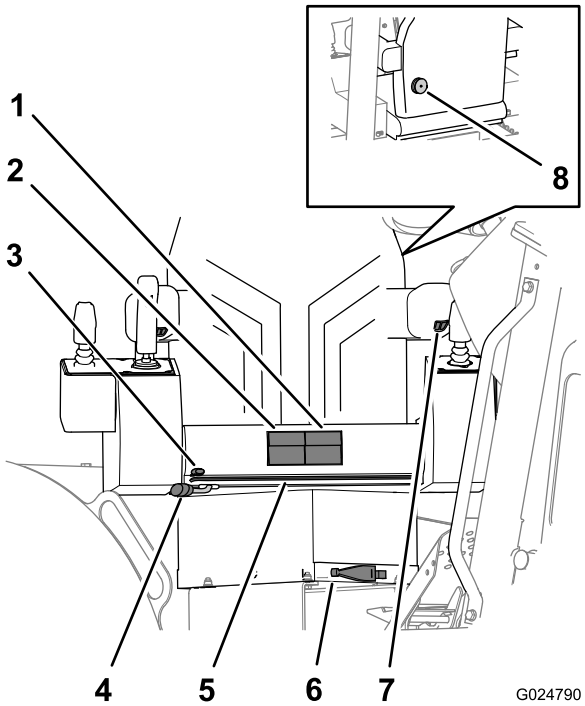

Figure 17

1. Seat-slide buttons
2. Seat-height buttons
3. Seat-slide lever
4. Seat-rotation lever
5. Seat-frame slide bar
6. Weight compensator
7. Armrest-height control
8. Lumbar knob (located on the seat back)

- **Seat-height buttons**–use them to adjust the seat pad up or down (Figure 17).
- **Seat-slide buttons**—use them to slide the seat pad forward or rearward (Figure 17).

Seat-Frame-Slide Lever and Seat-Base-Slide Lever

- **Seat-frame-slide lever**—Use this lever to adjust the entire seat and frame forward or rearward (Figure 17).
- **Seat-base-slide lever**—Use this lever to move the seat base forward or rearward on the seat frame (Figure 17).

Seat-Rotation Lever and Seat-Weight Compensator

- **Seat-rotation lever**—Use this lever to unlock the seat so that you can rotate the seat to the desired position. The seat will rotate 360° and lock into position at 10° increments (Figure 17).

  Note: Rotate the seat to the Front position before driving the machine.

- **Seat-weight compensator**—Rotate this lever for the weight compensator to adjust the seat support tension for the weight of the operator (Figure 17).
  - Rotate the lever for the weight compensator clockwise to increase the support tension of the seat.
  - Rotate the lever for the weight compensator counterclockwise to reduce the support tension of the seat.

Armrest-Height Control

Rotate the armrest-height control to raise or lower the armrest (Figure 17).

Seat-Lumbar Knob

Rotate the seat-lumbar knob, found behind the seat, to adjust the back lumbar support for best comfort (Figure 17).

Seat Belt

⚠ WARNING

Operating the machine without the rollover protection system (ROPS) securely in place can result in serious injury or death if the machine rolls over.

- **Ensure that the roll bar is securely in place.**
- **Always wear a seat belt with the ROPS in place.**
- **Ensure that the operator seat is properly secured to the machine.**

Note: Regulations in some localities require that seat belts on construction machines be 76 mm (3 inch) wide. Check with local authorities regarding the requirements for seat belts.

- To fasten the seat belt, insert the tab end into the left buckle.

  Note: Ensure that the tab end and the buckle are securely fastened.

- To release the seat belt, push the button on the buckle.

Battery-Disconnect Switch

The battery-disconnect switch is located behind the right engine cowl (Figure 18); use it to electrically disconnect the battery from the machine.

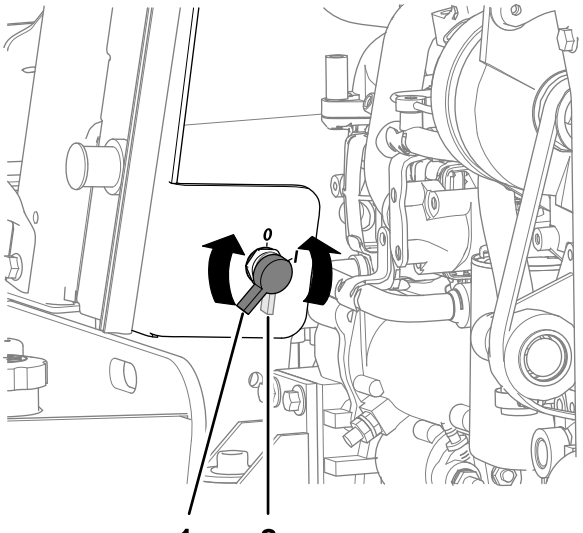

Figure 18

1. Battery On position
2. Battery Off position

- Rotate the battery disconnect clockwise to the On position.
- Rotate the battery disconnect counterclockwise to the Off position.

Specifications

Note: Specifications and design are subject to change without notice.

Machine Dimensions and Weight Data

Wheel base	195 cm (76.8 inches)
Overall height (to the top of the ROPS)	281 cm (110 inches)
Overall width (at the tires)	218 cm (85.8 inches)
Minimum ground clearance	28.5 cm (11.2 inches)
Turning radius (2-wheel steering)	115 cm (291 inches)
Turning radius (4-wheel steering)	391 cm (154 inches)
Weight (without attachments)	4,343 kg (9,575 lb)

Attachments/Accessories

A selection of Toro approved attachments and accessories is available for use with the machine to enhance and expand its capabilities. Contact your Authorized Service Dealer or Distributor or go to www.Toro.com for a list of all approved attachments and accessories.

Operation

Note: Determine the left and right sides of the machine from the normal operating position.

Think Safety First

Carefully read all safety instructions and symbols in the safety section. Knowing this information could help you or bystanders avoid injury.

⚠ DANGER

Operating on wet grass or a steep slopes can cause sliding and loss of control.

Wheels dropping over an edge can cause a rollover, which may result in serious injury, drowning, or death.

Always use the seat belt.

Read and follow the rollover protection instructions and warnings.

To avoid loss of control and possibility of rollover:

- **Do not operate the machine near drop-offs or near water.**
- **Reduce your ground speed and use extreme caution on slopes.**
- **Avoid sudden turns or rapid changes in speed.**

⚠ CAUTION

This machine produces sound levels that can cause hearing loss through extended periods of exposure.

Wear hearing protection when operating this machine.

The use of protective equipment for eyes, ears, hands, feet, and head is recommended.

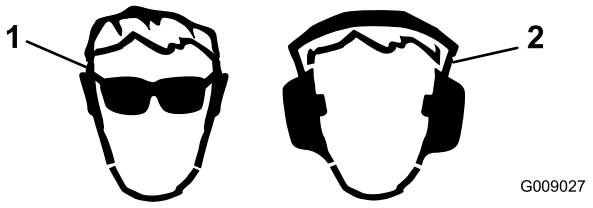

Figure 19

1. Wear safety glasses.
2. Wear hearing protection.

Preparing for Work

Before operating the machine on the job site, review the following items:

- Gather all relevant information available about the job site before you begin working.
- Review all blueprints and other plans, and identify all existing or proposed structures, characteristics of the landscape, and other proposed jobs in the area scheduled at the same time as your job.

  Note the following items at the job site:

  – Changes in elevation in the proposed work area

  – The condition and type of soil in the proposed work area

  – Locations of structures, water, railroad tracks, and other obstructions that you will need to work near or around

  – Utility markers, meters, and poles

  – If the work site is near or on a roadway with traffic, call the local authorities regarding proper safety procedures and regulations.

  – Access to the site
- Call your local One-Call service (811 in the US) or the One-Call referral number (888-258-0808 in the US and Canada) and ask the participating utility companies to locate and mark their underground utility lines. Also call utility providers that are not part of the One-Call system.

Adding Fuel to the Engine

Fuel tank capacity: 182 L (48 US gal)

Fuel type: ultra-low sulfur diesel (ULSD)

Note: Using other fuels can cause a loss of engine power and high fuel consumption.

Important: Do not use kerosene or gasoline instead of diesel fuel; otherwise, you will damage the engine.

Use only diesel fuel for the machine that meets Specification D975 of the American Society for Testing and Materials International. See your diesel fuel distributor.

Use only clean, fresh diesel fuel or biodiesel fuels with low (<500 ppm) or ultra low (<15 ppm) sulfur content. The minimum cetane rating should be 40. Purchase only enough fuel that you expect to use within 30 days to ensure that it stays fresh.

Use summer-grade diesel fuel (No. 2-D) at temperatures above 20°F (-7°C) and winter-grade diesel fuel (No. 1-D or No. 1-D/2-D blend) below 20°F (-7°C). Using winter-grade fuel at lower temperatures provides a lower flash point and cold flow characteristics, which aid in starting the engine and help prevent clogging the fuel filter.

Using summer-grade fuel above 20° F (-7°C) contributes toward a longer fuel pump life and increased power compared to using winter-grade fuel.

⚠ WARNING

Fuel is harmful or fatal if swallowed. Long-term exposure to fuel vapors can cause serious injury and illness.

- **Avoid prolonged breathing of vapors.**
- **Keep your face away from the nozzle and the fuel tank opening.**
- **Keep fuel away from your eyes and skin.**

⚠ DANGER

In certain conditions, fuel is extremely flammable and highly explosive. A fire or explosion from fuel can burn you and others and can damage property.

- **Fill the fuel tank outdoors in an open area when the engine is cold. Wipe up any fuel that spills.**
- **Never fill the fuel tank inside an enclosed area.**
- **Never smoke when handling fuel, and stay away from an open flame or where fuel fumes may be ignited by a spark.**
- **Store fuel in an approved container, and keep it out of the reach of children. Never buy more than a 30-day supply of fuel.**
- **Do not operate the machine without the entire exhaust system in place and in proper working condition.**

In certain conditions, fueling can release static electricity and cause a spark, which can ignite the fuel vapors. A fire or explosion from fuel can burn you and others and can damage property.

- Always place fuel containers on the ground, away from your vehicle before filling.
- Do not fill fuel containers inside a vehicle or on a truck or trailer bed, because interior carpets or plastic truck bed liners may insulate the container and slow the loss of any static charge.
- When practical, remove the equipment from the truck or trailer, and refuel the equipment with its wheels on the ground.
- If refuelling the equipment with its wheels on the ground is not possible, then refuel such equipment on a truck or trailer from a portable container rather than from a fuel dispenser nozzle.
- If you must use a fuel dispenser nozzle, keep the nozzle in contact with the rim of the fuel tank or container opening at all times until fueling is complete.

Using Biodiesel Fuel

This machine can also use a biodiesel blended fuel of up to B20 (20% biodiesel, 80% petrodiesel). The petrodiesel portion should be low or ultra-low sulfur. Observe the following precautions:

- The biodiesel portion of the fuel must meet specification ASTM D6751 or EN14214.
- The blended fuel composition should meet ASTM D975 or EN590.
- Biodiesel blends may damage painted surfaces.
- Use B5 with a biodiesel content of 5% or less in cold weather.
- Check seals, hoses, and gaskets that come in contact with the fuel, as they may degrade over time.
- The fuel filter may become plugged for a time after converting to a biodiesel fuel blend.
- Contact your distributor for more information about biodiesel fuel.

Storing Fuel

If you store fuel in a storage tank, it can accumulate foreign material or water. Keep the fuel storage tank outside, and keep the fuel as cool as possible. Remove water from the fuel in the storage container at regular intervals.

Filling the Fuel Tank

Note: Fill the fuel tank of the machine at the end of each day to prevent condensation in the fuel tank.

1. Clean around the fuel-tank cap (Figure 20), and remove the cap from the tank.

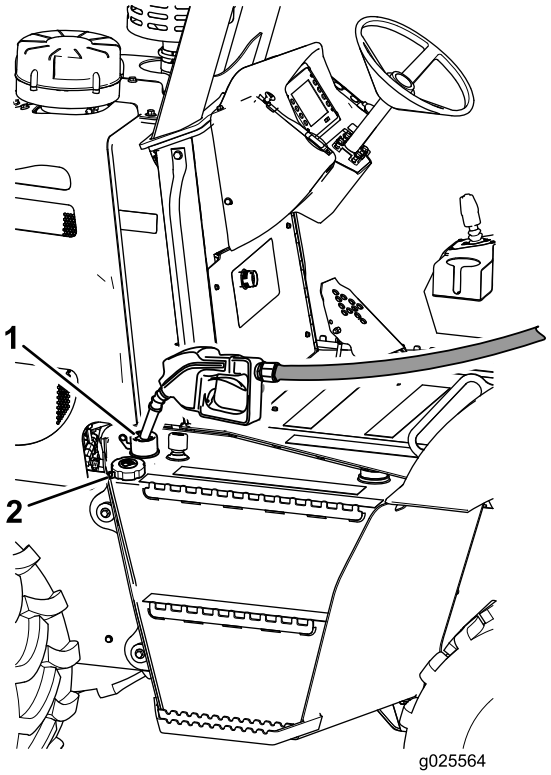

Figure 20

1. Filler neck
2. Fuel-tank cap (off)

Note: Remove the cap slowly to reduce the air pressure buildup.

2. Fill the fuel tank to the bottom of the neck to allow space for the fuel to expand.

   Note: The fuel tank capacity is 182 L (48 US gal).

3. Install the fuel-tank cap and tighten it securely by hand.

Draining Water from the Fuel-Water Separator

Service Interval: Before each use or daily

1. Remove the left side panel; refer to Removing the Side Panels (page 44).
2. Place a drain container below the drain valve on the fuel-water separator (Figure 21).

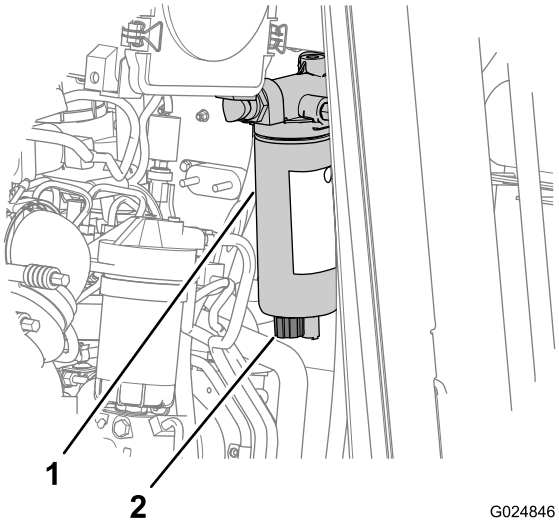

Figure 21

1. Fuel-water separator
2. Drain valve

3. Rotate the drain valve counterclockwise approximately 3-1/2 turns until the valve drops down from the fuel-water separator (Figure 22).

   Note: The valve should extend 25 mm (1 inch) from the separator.

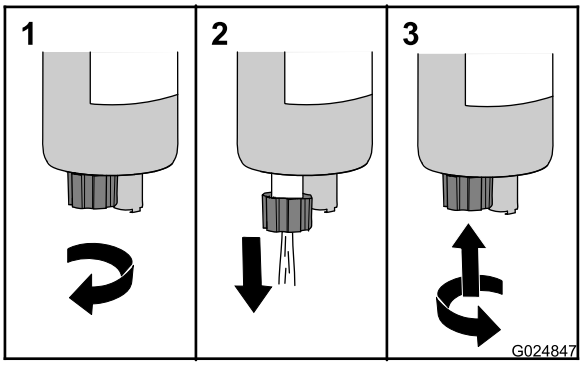

Figure 22

1. Open the drain valve.
2. Drain the water.
3. Close the drain valve.

4. Drain the water and sediment from the separator until clear fuel is visible (Figure 22).
5. Lift up the valve and turn it clockwise until it is hand tight (Figure 22).

   Note: Do not overtighten the drain valve of the fuel-water separator; overtightening the valve can damage the threads of the valve.

6. Install the left side panel; refer to Installing the Side Panels (page 45).

Checking the Engine-Oil Level

Service Interval: Before each use or daily

Note: The engine is shipped with oil in the crankcase; however, check the oil level before and after you first start the engine.

Oil specification: API classification of CJ-4 or higher

Use only high-quality SAE 15W-40 heavy-duty engine oil with an API classification of CJ-4 or higher.

While SAE 15W-40 oil with an API classification of CJ-4 or higher is recommended for most climates, refer to Figure 23 for oil viscosity recommendations for extreme climates.

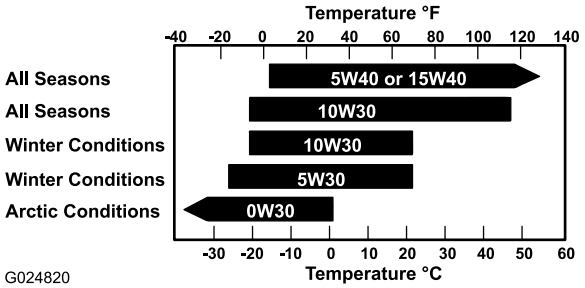

Figure 23

Note: Limited use of low-viscosity oils such as SAE 10W-30 with an API classification of CJ-4 or higher can be used for easier starting and providing sufficient oil flow at ambient temperatures below -5°C (23°F). However, continuous use of low-viscosity oil can decrease engine life.

Toro Premium Engine Oil is available from an Authorized Toro Service Dealer in either 15W-40 or 10W-30 viscosity with API classification CJ-4 or higher. See the *Parts Catalog* for part numbers. Also, refer to the engine operator's manual, included with the machine, for further recommendations.

Important: If the oil level in the crankcase is too low or too high and you run the engine, you may damage the engine.

Note: The best time to check the engine oil is when the engine is cool before it has been started for the day. If the oil level is at or below the Add mark on the dipstick, add oil to the engine to bring the oil level up to the Full mark. **Do not overfill.** If the oil level is between the Full and Add marks on the dipstick, you do not need to add oil.

1. Ensure that the machine is on a level surface.
2. Lower all attachments, set the parking brake, stop the engine, and remove the key.

   Note: If you have run the engine, allow at least 15 minutes for the engine oil to settle in the crankcase.
3. Remove the left-side panel; refer to Removing the Side Panels (page 44).
4. Remove the dipstick and wipe it clean with a clean cloth (Figure 24).

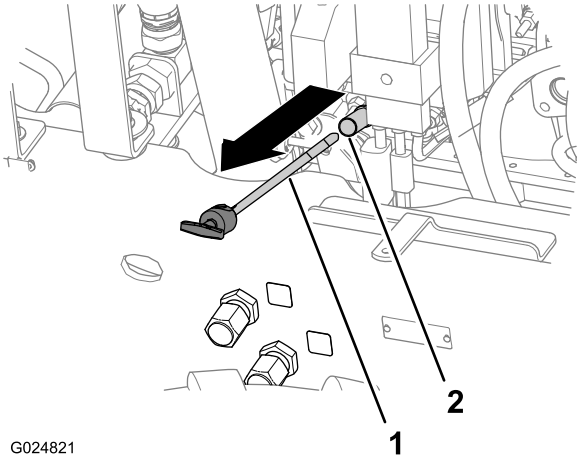

Figure 24

1. Dipstick
2. Dipstick tube

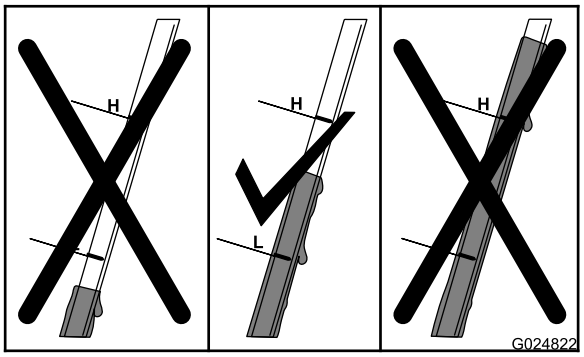

Figure 25

5. Insert the dipstick fully into the dipstick tube, then remove the dipstick (Figure 24).
6. Read the oil level on the dipstick (Figure 25).

   Note: The oil level on the dipstick should be between the H (high) mark and L (low) mark.

   - If the oil level is too low, slowly pour a small amount of the specified oil into the oil-filler neck (Figure 64) and wait 3 minutes; refer to step 1 in Filling the Engine with Oil (page 46).

     Important: Do not overfill the engine with oil.
   - If the oil level is too high, drain the excess oil until you obtain the correct oil level on the dipstick; refer to Draining the Engine Oil (page 45).
7. Repeat steps 4 through 6 until the oil level is correct.
8. Install the dipstick and oil-fill cap securely.
9. Install the left-side panel; refer to Installing the Side Panels (page 45).

Checking the Coolant Level in the Reservoir

Service Interval: Before each use or daily

If the engine overheat warning is displayed on the control panel, check the coolant level in the reservoir and add coolant if it is low. Also inspect the engine compartment around the radiator and clear away any obstructions to air flow.

1. Park the machine on a level surface, stop the engine, and remove the ignition key.
2. Allow the engine to cool.
3. Remove the left side panel; refer to Removing the Side Panels (page 44).
4. Check the coolant level in the reservoir (Figure 26).

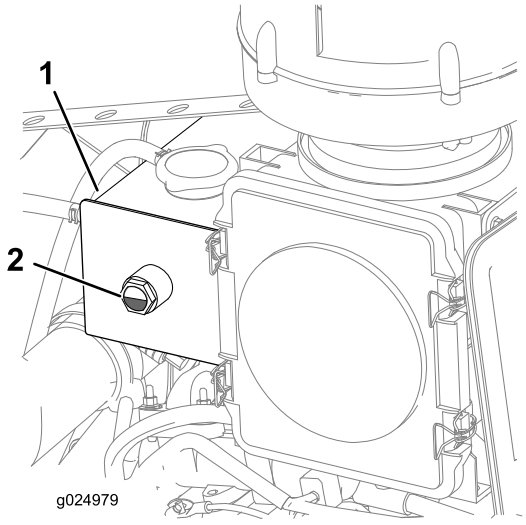

Figure 26

1. Reservoir
2. Coolant level (halfway between the Add and Full marks)

Note: Ensure that the coolant level is between 1/4 and 3/4 of the way up in the sight glass (Figure 26).

5. Add the specified coolant until the coolant level is between 1/4 and 3/4 of the way up in the sight glass.

Note: Ensure that the coolant solution is thoroughly mixed before filling the reservoir.

6. Install the left side panel; refer to Installing the Side Panels (page 45).

Checking the Hydraulic-Fluid Level

Service Interval: Before each use or daily

Hydraulic fluid specification: Mobilfluid 424

Note: Many brands of hydraulic fluid are almost colorless, making it difficult to detect leaks. A red dye additive for the hydraulic system oil is available in 20 ml (0.68 oz) bottles. One bottle is sufficient for 15.1 to 22.7 L (4.0 to 6.0 US gal) of hydraulic fluid; you can order this additive from an Authorized Toro Service Dealer.

1. Park the machine on a level surface, and put all the attachments in the transport position.
2. Stop the engine, set the parking brake, and remove the ignition key.
3. Check the hydraulic-fluid level in the sight glass located at the side of the hydraulic reservoir (Figure 27).

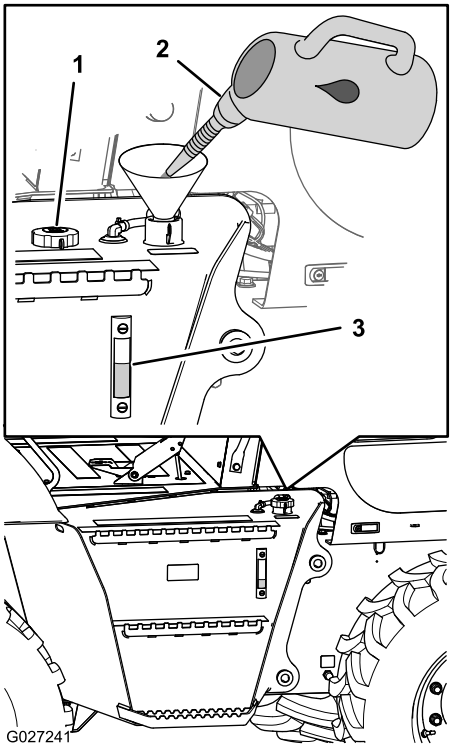

Figure 27

1. Fill cap (off)
2. Hydraulic fluid
3. Hydraulic fluid level at the midpoint of the sight glass

Note: The hydraulic-fluid level should be between the bottom and midpoint of the sight glass.

4. If the hydraulic-fluid level is not visible in the sight glass, remove the fill cap (Figure 27), add the specified hydraulic fluid until the fluid level is at the midpoint of the sight glass, and install the fill cap.

Checking the Restricted Air-Cleaner Indicator

Service Interval: Before each use or daily

1. Start the engine; refer to Operating the Engine (page 33).
2. Check to see if the restricted air-cleaner indicator is displayed in the home screen of the command center (Figure 28).

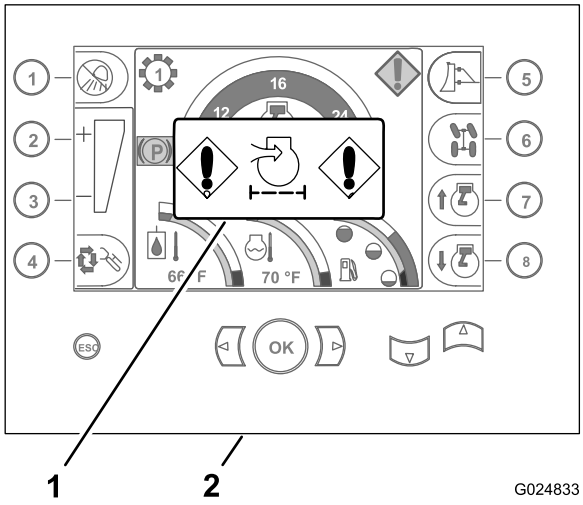

Figure 28

1. Restricted air-cleaner indicator
2. Command center

3. Replace the air-cleaner element(s) as follows:
   A. Replace the primary air-cleaner element; refer to Replacing the Air-cleaner Elements (page 48).
   B. Repeat steps 1 and 2.
   C. If the restricted air-cleaner indicator is still displayed, replace the secondary air-cleaner element; refer to Replacing the Air-cleaner Elements (page 48).

Inspecting the Machine

Service Interval: Before each use or daily

Inspect the following items on the machine each day before you start the engine:

- Check for leaks under the machine, and repair all leaks.
- Check the tires for wear, damage, and low pressure.
- Check the machine for debris, especially around the engine.

  Note: Ensure that the area near the engine is clean so that the engine cools properly.
- Clean or replace any safety or instructional decal that you cannot read.
- Clean machine components that you use.
- Remove any loose items from the machine.
- Check the machine for broken, damaged, loose, or missing parts. Replace, tighten, or adjust these parts before you operate the machine.
- Repair or replace all damaged ROPS and seat belt parts.

Operating the Command Center

Software Messages

The command center will display information about the controller version, display version, and installed optional attachments or kits that are operated through the command center. This information is displayed on the splash screen during start up of the machine, as shown in A of Figure 29 or when you access the main selection screen, as shown in B of Figure 29.

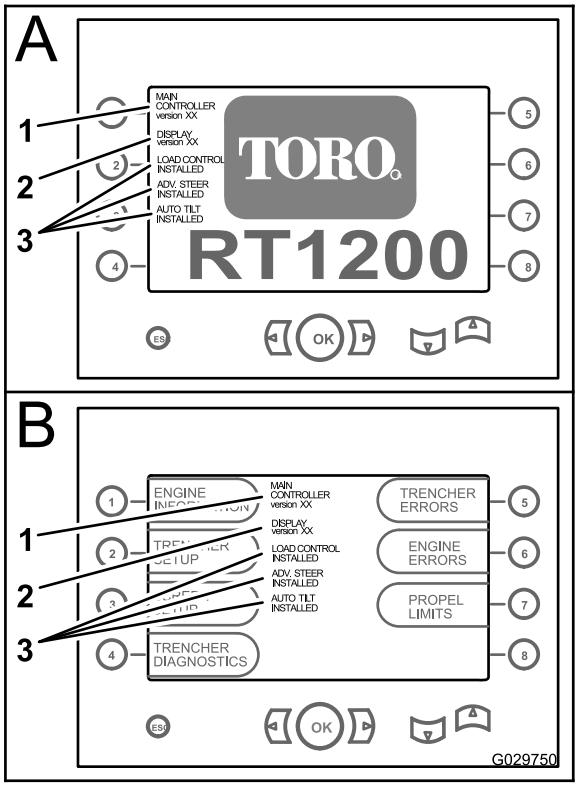

Figure 29

1. Main controller version
2. Display version
3. Installed optional attachments or kits

Using the Home Screen

Use the previous screen, next screen, down screen, or up screen buttons to display either the rpm home screen (A of Figure 30), the % load home screen (B of Figure 30) or the main selection screen (C of Figure 30).

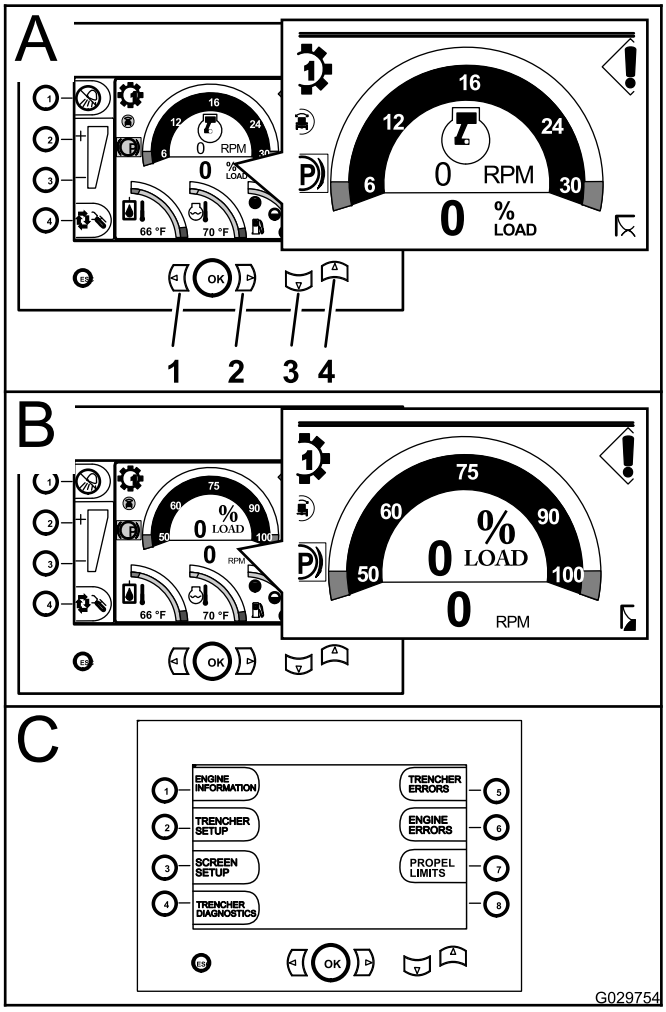

Figure 30

1. Previous screen button
2. Next screen button
3. Down screen button
4. Up screen button

Understand the meaning of the icons that indicate the functions and the state of the machine.

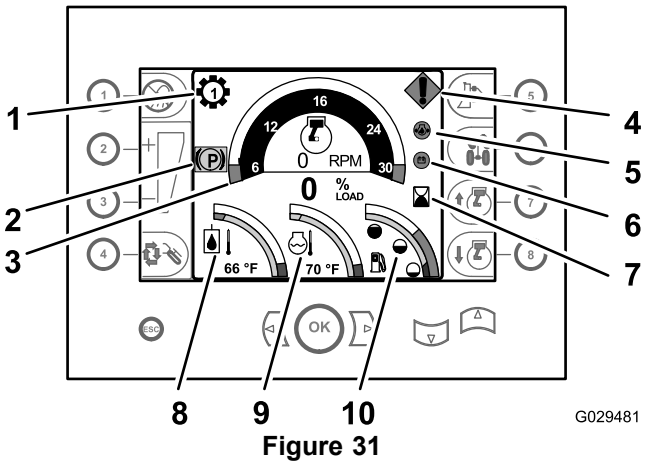

Figure 31

1. Gear indicator
2. Parking brake indicator
3. Tachometer
4. Machine or engine error
5. Low engine-oil pressure
6. Check alternator or battery
7. Hour meter
8. Hydraulic-fluid temperature
9. Coolant temperature
10. Fuel level

Reading the Operating Indicators in the Command Display

Display the home screen of the command center to find information about the transmission, engine, hydraulic system, and fuel quantity.

- **Gear indicator**—This indicator shows which gear is selected for the transmission (gears 1 through 4) and is displayed above and to the left of tachometer (Figure 31).
- **Tachometer**—The tachometer indicates the engine speed in revolutions per minute (rpm). The tachometer is displayed in the upper center of the command-center display (Figure 31).

  Note: Each number on the gauge is equal to x 100 rpm. Each space on the gauge is equal to 600 rpm. The range of the tachometer display is 0 to 3000 rpm.
- **Hour meter**—The hour meter indicates the number of hours that the engine has run. It is displayed in the center right area of the command display, to the right of the tachometer (Figure 31).
- **Hydraulic-fluid temperature indicator**—This indicator shows the operating temperature of the hydraulic fluid and is displayed in the lower left area of the command display (Figure 31).

  Note: If the indicator moves into the red area, reduce the work speed. If the gauge remains in the red area, stop the machine and move the direction control lever to the Neutral position. Check the oil level and for obstructions in the radiator or the oil cooler.
- **Coolant temperature indicator**—This indicator shows the temperature of the coolant in the engine-cooling system. It is displayed in the lower center area of the instrument cluster (Figure 31).

Note: If the indicator goes into the red area, reduce the engine speed to idle for a few minutes to allow the engine to cool, then stop the engine. Check the coolant level, for debris on the radiator, or for a thermostat that does not operate correctly. Also check the drive belt, belt tensioner, or water-pump pulley.

- **Fuel-level indicator**—This indicator shows the remaining level of fuel that is in the tank, and it is displayed in the lower right area of the command display (Figure 31).
- **Parking-brake-on indicator**—This indicator is displayed while the parking brake is engaged (Figure 31). The indicator disappears when you release the parking brake.

Changing Units of Measure

Use this procedure to change from English to metric units or from metric to English units

1. Display the home screen of the command center (Figure 32).

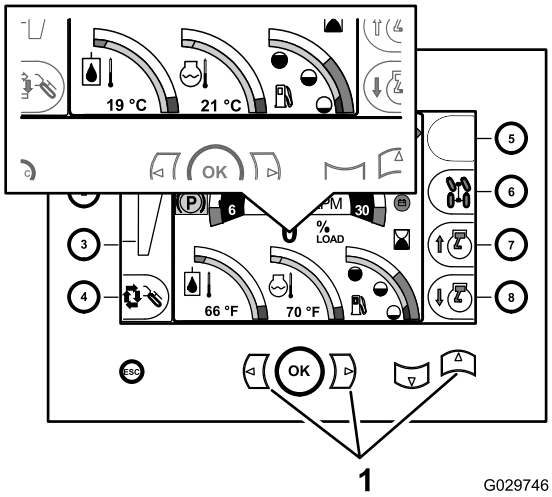

Figure 32

1. Left+right+up buttons

2. Press the left+right+up buttons (Figure 32).

   Note: The units of measure should change from English to metric units or from metric to English units.

   Note: If the display changes from the home screen to the main selection screen, press the left, right, up, or down button to return to the home screen.

Reading the Warning Messages in the Command Display

Note: When there are warning messages in the command display, take corrective measures immediately. There may be more than 1 warning displayed.

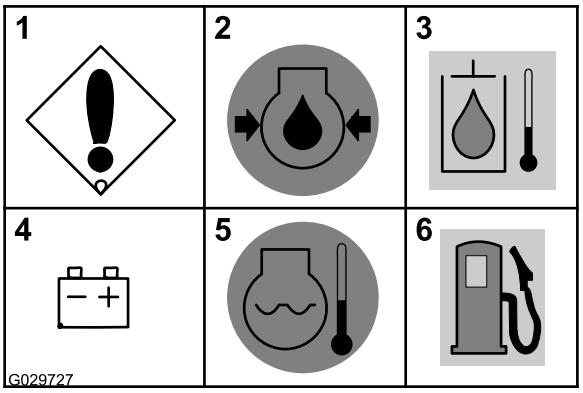

Figure 33

1. Machine or engine error
2. Low engine-oil pressure (flashes)
3. High hydraulic-oil temperature (flashes)
4. Check alternator or battery
5. Engine overheated (flashes)
6. Low fuel quantity (flashes)

- **Machine or engine error**—This message displays if the machine or engine experiences a fault. The cause of the fault is given in the Instrument Panel Diagnostics (Figure 33).

  Important: ***Do not*** **run the engine if this warning message appears.**

- **Low engine-oil pressure**—This warning message displays if the oil pressure of the engine is 90 Kpa (13 psi) or lower (Figure 31 and Figure 33).

  Important: ***Do not*** **run the engine if this warning message appears.**

- **High hydraulic-oil temperature**—This message flashes if the oil in the hydraulic system is 102° C (215° F) or higher (Figure 33)

  Important: ***Do not*** **run the engine if this warning message appears.**

- **Check alternator or battery**—This message displays if the alternator and battery voltage is 12 volts or less (Figure 31 and Figure 33).

  Note: If this message is appears, stop the engine, repair the charging system, or replace the battery.

- **Engine overheated**—This message flashes if the engine coolant is 104° C (220° F) or higher (Figure 31 and Figure 33).

  Important: ***Do not*** **run the engine if this warning message appears.**

- **Low fuel quantity**—This message displays when the fuel quantity in the tank is less than 18.2 L (5.8 US gal).
- **Wait-to-start-engine indicator**—This indicator displays when the key switch is in the On position and the intake air heater for the engine is energized (Figure 34).

  Note: Wait until the indicator no longer appears before attempting to start the engine (Figure 34).

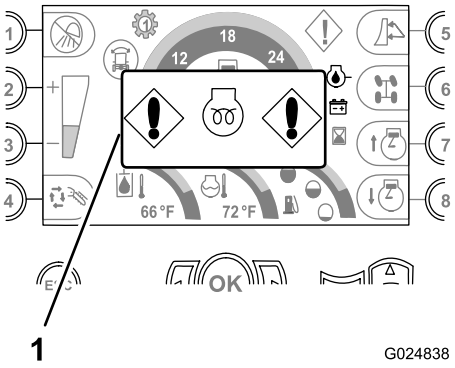

Figure 34

1. Wait-to-start-engine indicator

Reading the Machine or Engine Error Indicators in the Command Display

Note: When a warning indicator is shown in the command display, take corrective measures immediately.

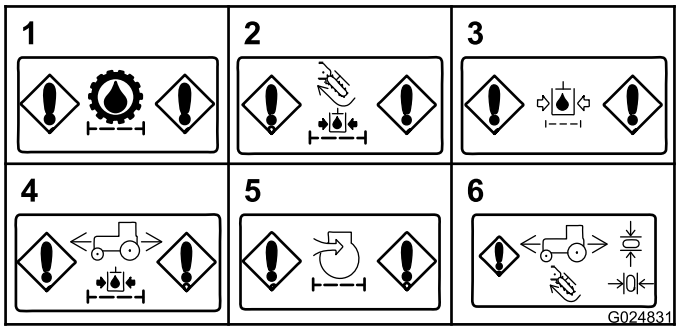

Figure 35

1. Hydraulic-charge filter restriction (transmission)
2. Hydraulic-charge filter restriction (accessories)
3. Hydraulic-return filter restriction
4. Hydraulic-charge filter restriction (traction motor)
5. Air-filter restriction (engine)
6. Return the joystick to neutral indicator

- **Hydraulic-charge filter restriction (transmission)**—This message is displayed if the hydraulic-charge filter for the transmission is restricted (Figure 35).

  Note: If this message is displayed, stop the engine and replace the hydraulic-charge filter for the transmission.

- **Hydraulic-charge filter restriction (accessories)**—This message is displayed if the charge filter for the hydraulic circuit for the accessories is restricted (Figure 35).

  Note: If this warning message is displayed, stop the engine and replace the charge filter for the hydraulic circuit for the accessories.

- **Hydraulic-return filter restriction**—This message is displayed if the hydraulic-return filter is restricted (Figure 35).

  Note: If this message is displayed, stop the engine and replace the hydraulic-return filter.

- **Hydraulic-charge filter restriction (traction motor)**—This message is displayed if the charge filter for the traction motor is restricted (Figure 35).

  Note: If this message is displayed, stop the engine and replace the hydraulic-charge filter for the traction motor.

- **Air-filter restriction (engine)**—This message is displayed when the air filter requires service (Figure 35).

- **Return to Neutral indicator**—This indicator is displayed if you attempt an operation that requires you to return the joystick or the traction pedal to the Neutral position. Return the joystick or the traction pedal to the Neutral position before continuing operation (Figure 35).

  Note: This message also appears if you start the engine when either the utility drive or the attachment joysticks at the operator seat are not in the Neutral position. Move the joysticks to the Neutral position to clear the warning.

Accessing the Main-Selection Screen

To access the main-selection screen, press and release the up arrow and the down arrow buttons (Figure 36) at the same time. This screen allows the user to choose from the function screens shown in Figure 36.

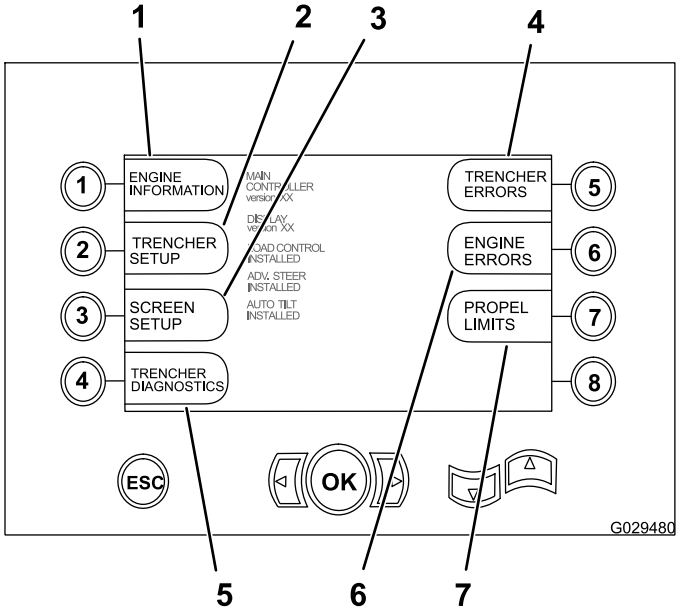

Figure 36

1. Engine information
2. Trencher (traction unit) setup
3. Screen setup
4. Trencher (traction unit and attachments) diagnostics
5. Trencher (traction unit) errors
6. Engine errors
7. Propel (ground speed) limits

Accessing the Engine Information Screen

To access the engine-information screen, press button number 1 on the main-selection screen; refer to Accessing the Main-Selection Screen (page 30).

This screen displays measurements for the following engine-operating parameters:

- Engine speed in rpm (Figure 37)
- Engine load percentage (Figure 37)
- Engine hours (Figure 37)
- Oil pressure and boost pressure (Figure 37)
- Engine coolant and intake temperature (Figure 37)
- Voltage (Figure 37)
- Amount of fuel used (Figure 37)

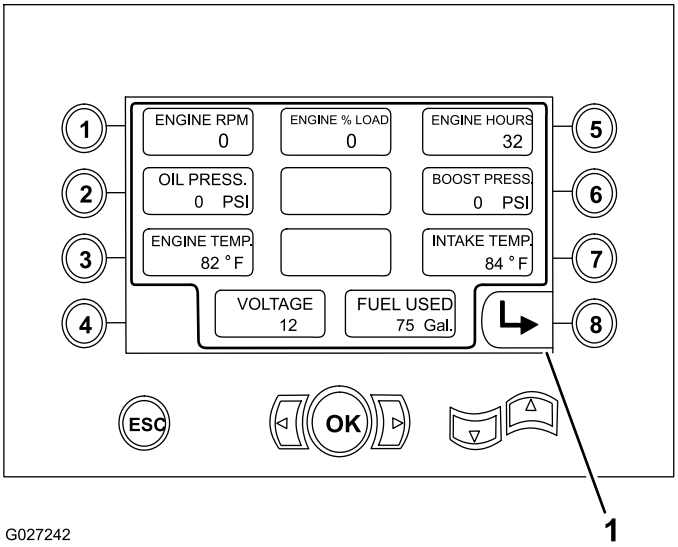

Figure 37

1. Return to the previous screen

Accessing the Trencher Setup Function Screen

Note: You need the PIN to access this screen; to obtain the PIN, contact an Authorized Toro Distributor.

Use the trencher setup screen to access calibration settings for the following functions:

- Foot pedal for traction control
- Advanced-steering control (optional accessory)
- Automatic-tilt chassis (optional accessory)

Accessing the Screen Setup Function Screen

To access the screen setup function, press button number 3 on the main-selection screen; refer to Accessing the Main-Selection Screen (page 30).

This screen allows the user to increase or decrease the brightness of the monitor by pressing the following:

- Button 5—Increase the display brightness (Figure 38)
- Button 6—Decrease the display brightness (Figure 38)

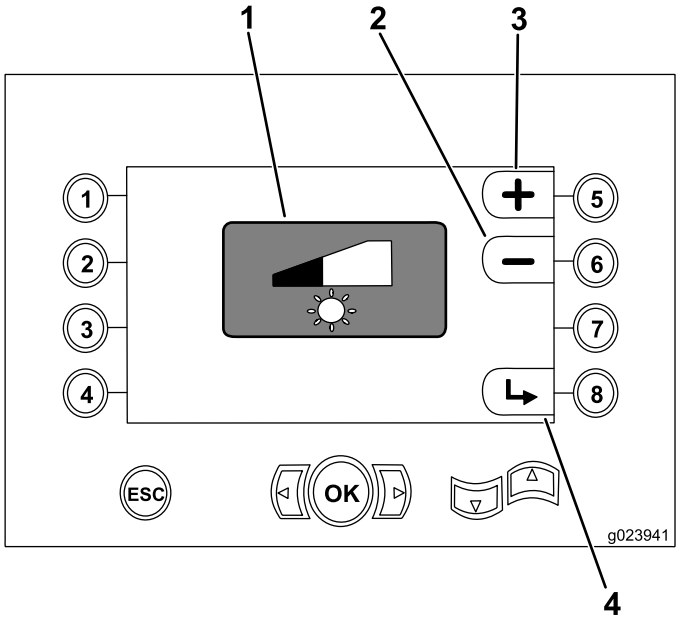

Figure 38

1. Display brightness indicator
2. Decrease brightness
3. Increase brightness
4. Return to the previous screen

Accessing the Trencher Diagnostics Function Screen

Use the trencher diagnostic screen to view state and signal information for the following machine and attachment functions:

- Traction control
- Optional trencher attachment
- Optional vibration plow attachment
- Optional back hoe attachment; Optional/standard backfill blade attachment
- Optional automatic-tilt chassis
- Optional advanced-steering control

Accessing the Trencher Errors Information Screen

Use the trencher diagnostic screen (Figure 39) view suspect part number—failure mode identifier (SPN-FMI) codes for the traction unit; contact an Authorized Service Dealer.

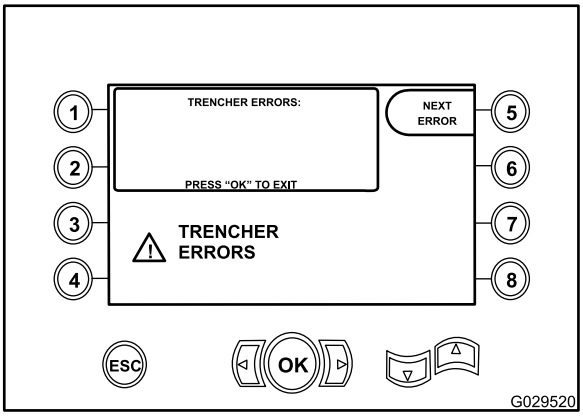

Figure 39

Accessing the Engine Errors Information Screen

Use the trencher diagnostic screen (Figure 40) view suspect part number—failure mode identifier (SPN-FMI) codes for the engine; contact an Authorized Service Dealer.

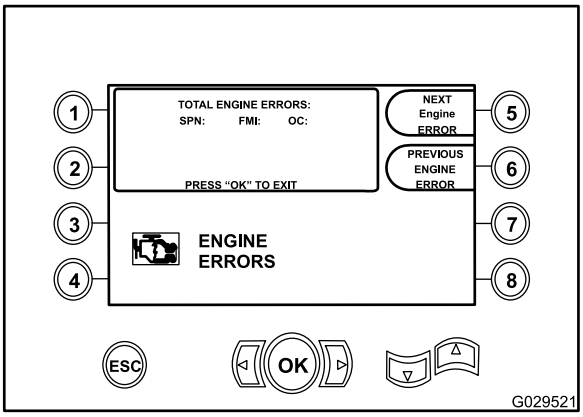

Figure 40

Setting the Propel-Limit Function Screen

Use the propel-limit function to restrict the forward and reverse ground speed that you can control with the utility-traction joystick.

Note: You can restrict the ground speed controlled by the utility-traction joystick by a percent (15 to 100%) of the ground speed that you can set with the foot pedal.

1. From the main-selection screen, press button number 7 access the settings for the propel limit function; refer to Figure 36 in Accessing the Main-Selection Screen (page 30).

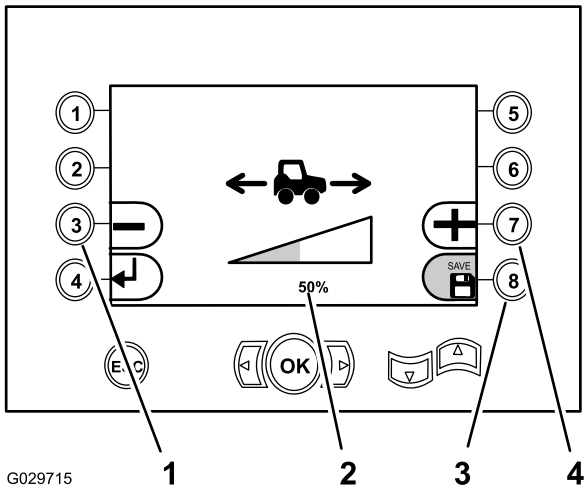

Figure 41

1. Decrease the range of ground speed set with the utility-traction joystick
2. Percent setting (50% shown)
3. Save setting
4. Increase the range of ground speed set with the utility-traction joystick

2. Set the ground speed limit for the utility-traction joystick as follows:
   - Press button 3 (Figure 41) to lower the percent of ground speed that you can set with the utility-traction joystick (down to 15% of the ground speed that you can set with the foot pedal.).

     Note: This gives you finer control over a smaller range of ground speed.
   - Press button 7 (Figure 41) to increase the percent of ground speed that you can set with the utility-traction joystick.

     Note: This gives you courser control over a larger range of ground speed (up to 100% of the ground speed that you can set with the foot pedal.
3. Press button 8 to save your setting (Figure 41).

   Note: The save icon momentarily displays the word Save and turns green.

Using the PIN screen

Note: This procedure requires that you have the PIN number, which you can obtain from an Authorized Service Dealer.

Note: To access the trencher setup function for the machine, you must enter the unique 8-digit identification number assigned into the PIN screen. The trencher setup functions protected by the PIN screen include the following:

- Pedal calibration
- Steering setup
- Auto-tilt setup

1. Press button number 2 [Trencher (traction unit) setup] on the main-selection screen; refer to Accessing the Main-Selection Screen (page 30).
2. Enter the 8-digit PIN.
3. Press button number 8 [Enter].

Note: Numbers 1, 2, 3, 5, 6, and 7 are the only numbers that can be used for the PIN.

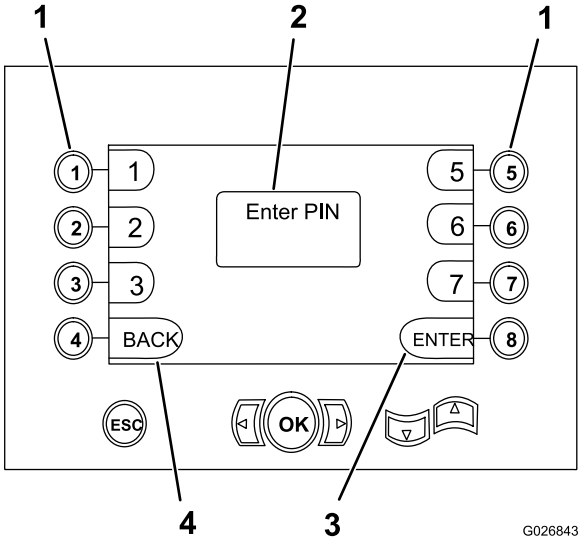

Figure 42

1. Buttons for corresponding PIN numbers
2. PIN entry appears here
3. Enter PIN
4. Return to the previous screen

Operating the Engine

Before Starting the Engine

1. Check the oil level; refer to Checking the Engine-Oil Level (page 24).
2. Ensure that the battery-disconnect switch is in the On position; refer to Battery-Disconnect Switch (page 20).
3. Adjust the seat position, fasten the seat belt, and ensure that the seat is facing forward.

   Note: The seat interlock system prevents you from operating the machine unless you are sitting in the operator seat. If you do not remain seated and the control levers are not in the Neutral position, the system will stop both the ground drive and the attachment drive in 1 second. Do not set a weighted object on the seat, bypass the seat interlock system, or tamper with the system.
4. Set the parking-brake button to the On position; refer to Parking-Brake Switch (page 16).
5. Ensure that all control levers are in the Neutral or the Stop position; refer to Foot Pedal (page 17), Utility-Traction Joystick (page 17), and Backfill-Blade / Vibratory-Plow Joystick (page 17)/ Vibratory-Plow / Trencher-Motor Joystick (page 18).

   Note: If the machine is equipped with a backhoe, ensure that the engine shutoff control is pulled up.

Starting the Engine

⚠ WARNING

Before starting the engine, sit in the operator seat, fasten the seat belt, apply the parking brake, and ensure that the transmission direction control and digging control levers are in the Neutral position. Warn all bystanders that you are starting the engine.

Important: When you start the engine, the transmission is automatically set to first gear and the auto centering for the rear steering (optional advanced-steering kit) is in the manual mode.

Note: In extreme hot or cold weather, take the necessary precautions; refer to Operating the Machine in Extreme Conditions (page 34).

1. Turn the key switch to the On position and check that all controls are in the Neutral position.

   Note: The low engine-oil pressure indicator and the check alternator or battery displays when the key switch is in the On position and the engine is not running.

   Note: In cold weather, the wait-to-start-engine indicator displays to alert the operator to wait for the intake air to warm up before starting. When the intake air is at the proper temperature for starting the engine, the wait-to-start indicator in the display turns off.
2. Turn the key switch to the Start position.

   Note: If the engine starts and then stops, **do not** turn the key switch to the Start position again until the starter motor has stopped turning.

   Important: *Do not* operate the starter motor until it stops turning. *Do not* operate the starter motor for more than 30 seconds at one time. Allow the starter motor to cool for 30 seconds before you operate it again. When you engage the starter motor, you should see white or black smoke coming from the exhaust pipe; if you do not, check the fuel supply.
3. When the engine starts, check the command-control display to ensure that the indicator readings are correct. If any of the indicators appear on the display, stop the engine and check the problem.
4. Run at the engine at 1100 rpm until the coolant is warm; refer to Setting the Engine Speed (page 33).
5. Cycle all the machine components before operating the machine, and check all the controls and components to ensure that they are working properly.

   Note: If the engine is new or newly rebuilt, refer to Breaking in a New or Rebuilt Engine (page 34).

Setting the Engine Speed

Note: Do not run the engine at full throttle below the peak torque rpm (refer to the engine data plate for the peak torque rpm) for more that 30 seconds.

Note: Do not run the engine at a low idle speed for long periods of time, because it causes a low operating temperature that can allow acids and deposits to form in the engine oil.

Note: Do not operate the engine at full throttle below the peak torque rpm (refer to the engine data plate for peak torque rpm) for more than 30 seconds. Operating the engine at full throttle below the peak torque will seriously damage it.

- To **increase** the engine speed, push button 7 on the command center (Figure 43).
- To **decrease** the engine speed, push button 8 on the command center (Figure 43).

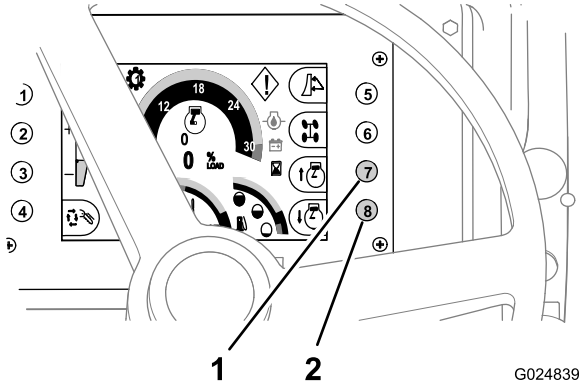

Figure 43

1. Button 7 (increase the engine speed)
2. Button 8 (decrease the engine speed)

Stopping the Engine

1. Park the machine on level ground, if possible.

   Important: If you must temporarily park the machine on a slope or an incline, position the machine at a right angle to the slope. Ensure that the machine is behind an object that will not move.

2. Lower all attachments to the ground.
3. Set the parking brake.
4. Reduce the engine speed to idle and allow it to run for 3 to 5 minutes to adequately cool the engine.
5. Turn the key switch to the Off position.

   Note: If you leave the machine unattended, remove the key from the key switch.

Breaking in a New or Rebuilt Engine

During the first 20 hours of operation of a new or rebuilt engine, do the following:

- Run the engine at a normal operating temperature.
- Do not run the engine at low idle speeds for long periods of time.
- Operate the machine with normal loads for the first 8 hours.
- Do not use special "break-in" lubricating oil. Use the specified oil; refer to Checking the Engine-Oil Level (page 24) and Servicing the Engine Oil and Filter (page 45).

Operating the Machine in Extreme Conditions

Both hot and cold weather place unusual demands upon the machine and the attachments. You can minimize temperature-related problems on the machine by performing the following steps:

Operating the Machine in Hot Weather

1. Clean all dirt and debris from the radiator, heat exchanger, hydraulic-fluid cooler, and engine area to ensure that there is proper air flow to cool the engine.
2. Remove any debris from the air inlets in the nose and side panels.
3. Use lubricants that have the correct viscosity; refer to Checking the Engine-Oil Level (page 24).
4. Operate the machine at an appropriate engine speed and transmission range for the operating conditions; do not overload the engine.
5. Use pressure-testing equipment to test the radiator cap before the hot weather begins; replace the cap if it is damaged.
6. Maintain the correct coolant level in the reservoir and in the radiator, and ensure that there is a mixture of 50% ethylene glycol and 50% water in the cooling system.

Operating the Machine in Cold Weather

Operating your machine in cold weather requires special attention to prevent serious damage to the machine. Performing the following procedures will extend the service life of your machine:

1. Clean the battery and ensure that it is fully charged.

   Note: A fully charged battery at -17°C (0°F) has only 40% of the normal starting power. When the temperature decreases to -29°C (-20°F), the battery has only 18% of the normal power remaining.

   Note: The machine comes with a maintenance-free battery. If you use a different battery and add water to it when the temperature is below 0°C (32°F), ensure that you charge the battery or run the engine for about 2 hours to prevent the battery from freezing.

2. Inspect the battery cables and terminals. Clean the terminals, and apply a coat of grease on each terminal to prevent corrosion.
3. Ensure that the fuel system is clean and free of water; refer to Draining Water from the Fuel-Water Separator (page 23).

   Note: Use the proper fuel for cold weather.

   Note: To help prevent condensation from building up in the fuel tank, fill up the fuel tank at the end of each day.

4. Check the coolant mixture before you operate the machine in cold weather. Use only a 50% ethylene glycol and 50% water mixture in the cooling system year round.
5. Before operating the machine, move it at low speed and actuate each hydraulic control several times to warm the oil.

   Important: The engine and the hydraulic system temperature indicators must be in their respective, normal operating temperature ranges before you perform any work with the machine.

Operating the Parking Brake

1. Toggle the parking-brake switch (Figure 44) up to apply the parking brake.

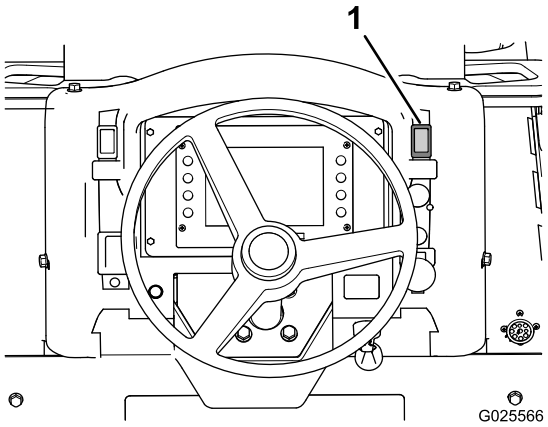

Figure 44

1. Parking-brake switch

2. Toggle the parking-brake switch down to release the parking brake.

   Note: The parking brake automatically engages when you stop the engine.

Driving and Stopping the Machine

Using the Traction-Control Pedal

The traction-control pedal controls the direction and the speed of the machine. The speed of the machine depends on the position of the gear-selector switch.

Note: For maximum speed in either direction, push the pedal completely down.

- Push down on the top of the pedal to move the machine forward (Figure 45).
- Push down on the bottom of the pedal to move the machine rearward (Figure 45).
- To reduce speed or to stop the machine, move the pedal up toward the Neutral position (Figure 45).

Note: The foot pedal overrides the utility-traction control when you increase or decrease the ground speed while you are operating rear-mounted attachments.

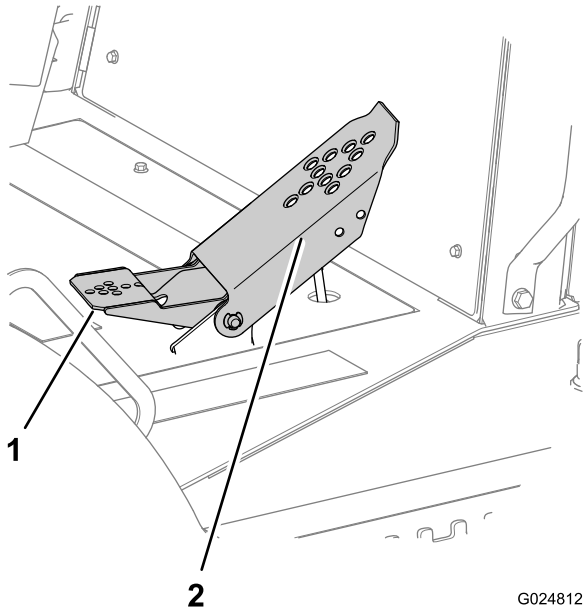

Figure 45

1. Heel pedal (reverse)
2. Toe pedal (forward)

Note: To increase the speed, push down farther on the pedal; to decrease the speed, allow the pedal to move up toward the Neutral position.

Steering the Machine

Using the Front-wheel Steering

Use the steering wheel to control the front-wheel steering (Figure 46).

Note: The front-wheel steering and rear-wheel steering operate independently (unless the machine is equipped with the optional advanced steering control).

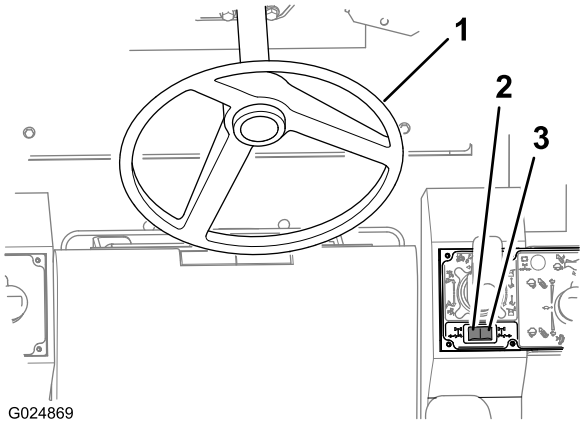

Figure 46

1. Steering wheel
2. Rear-wheel steering switch—turn the wheels left
3. Rear-wheel steering switch—turn the wheels right

Using the Rear-wheel Steering

The switch for the rear-wheel steering is used to control the steering direction (left or right) of the rear wheels only.

- Push the rocker switch for the rear-wheel steering (Figure 46) on the right half of the switch to turn the rear wheels to the right (turn left).
- Push this rocker switch for the rear-wheel steering (Figure 46) on the left half of the switch to turn the rear wheels to the left (turn right).

Using the Utility-traction Joystick

This joystick allows you to finely adjust the direction and the speed of the machine during trenching, plowing, or boring.

⚠ WARNING

To avoid injury, remain in the operator seat to operate the machine.

Note: If you do not remain in the operator seat, the machine will not move.

1. Release the parking brake.
2. Lift up on the lock ring that is at the bottom of the joystick handle (Figure 47).

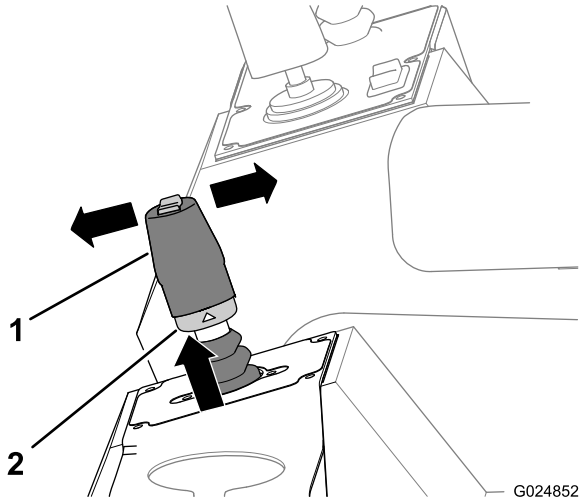

Figure 47

1. Utility-traction joystick
2. Lock ring

3. Move the lever out of the Neutral detent position and to 1 of the following positions:
   - Move the lever forward (toward the front of the machine) to move the machine forward (Figure 47).
   - Move the lever rearward (toward the rear of the machine) to move the machine in reverse (Figure 47).

   Note: Move the lever completely forward or rearward for the maximum speed.
4. Release the lock ring and the lever (Figure 47).

   Note: The lever is held in place front-to-rear by friction from the lock ring in order to maintain a constant speed.
5. Return the lever to the Neutral position to stop the machine (Figure 47).

   Note: The ground-drive foot control overrides the traction-adjustment-control lever. If you use the foot pedal, you must move the traction-adjustment-control lever to the Neutral position to release the override and return the lever to normal operation.

Stopping the Machine

⚠ WARNING

Jumping on or off the machine can cause an injury.

When you get on or off the machine, always face the machine, use the hand rails and steps, move slowly.

This machine has hydrostatic braking. When you remove your foot from the ground-drive foot pedal or move the utility-traction control back to the Neutral position, the machine stops. Always apply the parking brake after you stop the machine and before you stop the engine.

1. Park the machine on level ground.

Important: **If you must temporarily park the machine on a slope or an incline, position the machine at a right angle to the slope, with the front of the machine toward the bottom of the hill. Ensure that the machine is behind an object that will not move.**

2. Support or lower all attachments to the ground.
3. Set the parking brake.
4. If the machine has been operating under a heavy load, decrease the engine speed to idle and allow it to run for 3 to 5 minutes to cool the engine; refer to Setting the Engine Speed (page 33).
5. Turn the key switch to the Off position.
6. Remove the key from the ignition switch.

Note: Fill the fuel tank at the end of each work day to prevent condensation in the tank.

Operating the Transmission

Operating the Gear-Selector Switch for the Transmission

Note: When you first start the machine, gear 1 is selected.

Perform the following to shift the transmission from a lower gear to a higher gear or to shift from a higher gear to a lower gear:

- To select a higher gear, press the up-shift (right) button on the rocker switch (Figure 48).

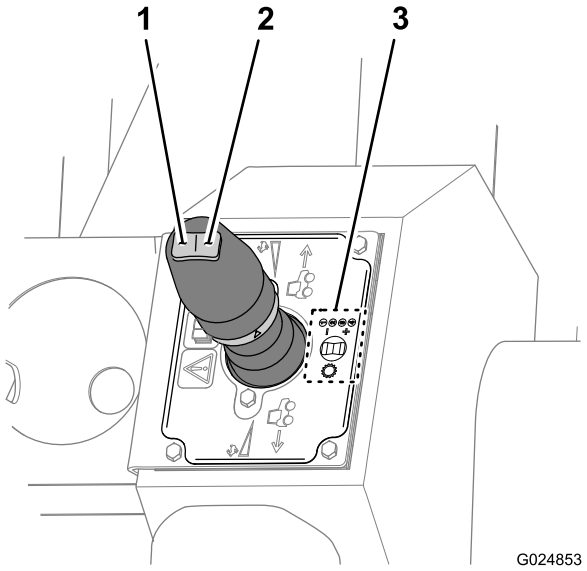

Figure 48

1. Down-shift button
2. Up-shift button
3. Icon—gear-shift pattern

- To select a lower gear, press the down-shift (left) button on the rocker switch (Figure 48).
- Cycle the gear-selector switch up or down until the desired gear is displayed in the command center.

Gear Selection	Machine Task
1	Trenching, hard plowing, and boring
2	Light trenching and backfilling
3	Light backfilling
4	Transporting

Note: You must sit in the operator seat when moving either of the ground-drive controls from the Neutral position; otherwise, the machine will not move.

Shifting during operation—you can shift gears while the machine is moving. Press the shift selector rocker switch up or down to the desired gear, 1 gear at a time.

Note: Do not shift the transmission from 4th gear while operating at high speed. Decrease the forward speed of the machine with the **foot pedal** before shifting the transmission to a lower gear.

Operating the Machine Tilt Feature

Removing the Tilt-lockout Pin

1. Remove the hairpin that secures the tilt-lockout pin to the chassis-lockout bracket (Figure 49).
2. Remove the tilt-lockout pin from the holes in the chassis-lockout bracket and the axle-lockout bracket (Figure 49).

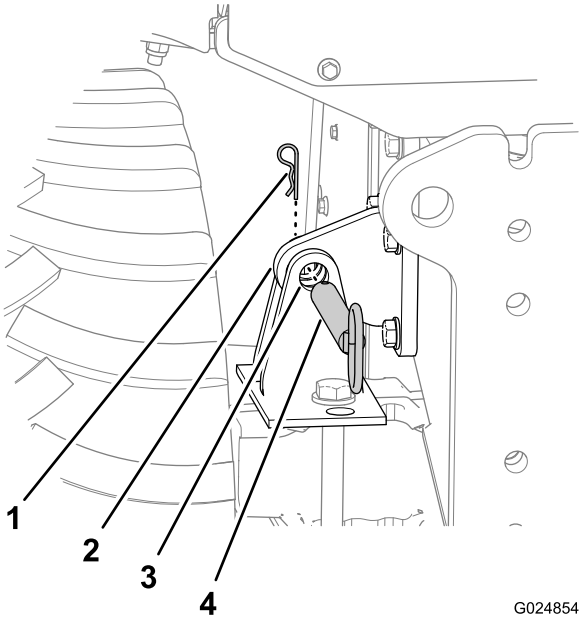

Figure 49

1. Hairpin
2. Chassis-lockout bracket
3. Axle-lockout bracket
4. Tilt-lockout pin

Installing the Tilt-lockout Pin

1. Use the tilt switch to align the hole in the chassis-lockout bracket with the holes in the axle-lockout bracket (Figure 49).
2. Remove the hairpin from the tilt-lockout pin (Figure 50).

   Note: The tilt-lockout pin should be stowed in the vertical hole in the axle-lockout bracket.

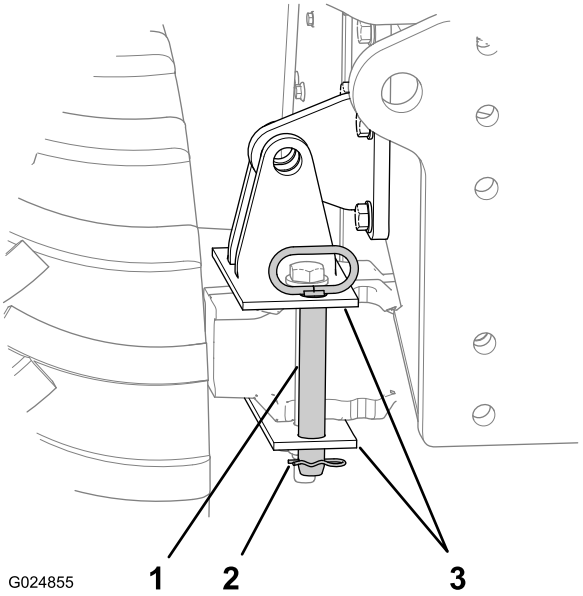

Figure 50

1. Tilt-lock pin
2. Hairpin
3. Axle-lockout bracket (vertical holes)

3. Remove the tilt-lockout pin from the stowed position.
4. Fully insert the tilt-lockout pin through the horizontal holes in the chassis-lockout bracket and axle-lockout bracket (Figure 49).
5. Secure the tilt-lockout pin to the axle-lockout bracket with the hairpin (Figure 49).

Stowing the Tilt-lockout Pin

1. Insert the tilt-lock pin through the vertical holes in the axle-lockout bracket (Figure 50).
2. Secure the pin to the lockout bracket with the hairpin (Figure 50).

Tilting the Machine

Use the machine tilt feature to compensate for side-to-side tilt when operating the machine across a slope.

- Push the upper part of this switch down (Figure 51) to tilt the machine right for inclined terrain.
- Push the lower part of this switch down (Figure 51) to tilt the machine left for inclined terrain.

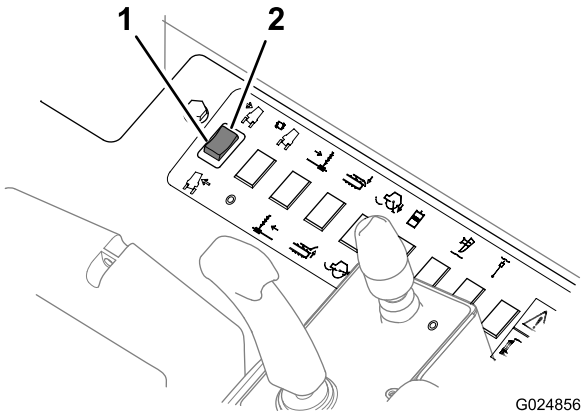

Figure 51

1. Tilt the machine right
2. Tilt the machine left

Note: Use the tilt gauge (Figure 52) to determine the degree of tilt at which the machine is operating.

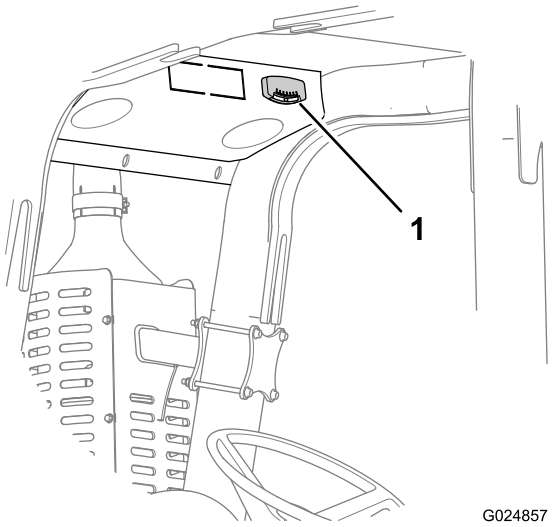

Figure 52

1. Tilt gauge

Preparing to Operate the Machine

After starting the engine but before operating the machine at the work site, do the following:

- Ensure that the ROPS and the seat belt are properly installed and in good working order.
- Ensure that all instruments are working properly.
- Ensure that all attachments are working properly in a clear, open area.

1. Start the engine and warm it up.
2. Raise the engine speed to the desired level.
3. Raise the attachments.
4. Release the parking brake.

Note: You must sit in the operator seat before you move the machine; otherwise, the machine will not move.

Note: The utility-traction lever controls the speed of the machine. The farther that you move the lever from the Neutral position, the faster the machine moves.

Important: Control the speed of the machine travel with the utility-traction lever, not the throttle.

5. Check the indicator display frequently.

Using the Power Port

Use the power port to provide a 12–volt electrical source for 12–volt accessories and devices, refer to Figure 11.

Transporting the Machine

Be sure that you understand the safety rules and laws for the area in which you are using the machine. Ensure that both the truck and the machine are equipped with the proper safety equipment.

Loading the Machine onto a Trailer

1. Ensure that the machine is level and that the tilt-lockout pin is installed; refer to Tilting the Machine (page 38) and Installing the Tilt-lockout Pin (page 38).
2. Ensure that the trailer and the ramp can support both your weight and the weight of the machine; refer to Specifications (page 20).
3. Always have the attachments in the Transport position when you are loading or unloading the machine.
4. Block the front and rear wheels of the trailer.
5. Slowly and carefully move the machine onto the trailer.
6. Lower the attachments to the trailer.
7. Engage the parking brake.
8. Stop the engine and remove the key.
9. Fasten the front and rear of the machine to the trailer using chains and a binder (Figure 53).

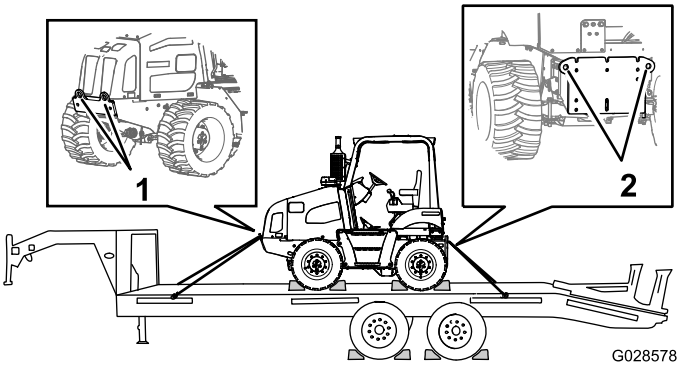

Figure 53

1. Front tie-down point (each side)
2. Rear tie-down point

10. Measure the distance from the ground to the highest point of the machine.

    Note: This is the clearance height to keep in mind while you transport the machine.
11. Remove the blocks from the front and rear trailer wheels.
12. After you have driven a few miles, stop the truck and check that your load is secure.

    Note: Ensure that the chains are still tight and that the machine has not moved on the trailer.

Unloading the Machine from a Trailer

1. Block the front and rear trailer wheels.
2. Remove the chains and binders from the machine.
3. Start the engine.
4. Ensure that the attachments are in the Transport position.
5. Slowly move the machine off the trailer.

Lifting the Machine with a Spreader Bar

1. Attach a crane lift cable to the single-lift point of a spreader bar.
2. Attach 2 of the lift cables on one end of the spreader bar to the lift points at the rear of the machine frame.
3. Attach the remaining 2 spreader bar lift cables to the lift points at the front of the machine frame.
4. **Carefully** and **slowly** lift the machine, and lower it to the desired location.

Moving a Non-functioning Machine

Repair a non-functioning machine on the job site, if possible. Otherwise, you must lift the machine with a spreader bar and transport the machine to a repair facility.

Completing the Work for the Day

When you complete your work for the day, do the following:

1. Backfill the spoils in the part(s) of the trench in which you are finished working.
2. Move the machine to a safe and stable location.
3. Move all levers to the Neutral position.
4. Set the parking brake.
5. Lower all attachments to the ground.
6. Let the machine idle for a few moments to cool it down.
7. Stop the engine, wait for all moving part to stop, and remove the ignition key.
8. Turn the battery disconnect switch to the Off position; refer to Battery-Disconnect Switch (page 20).

Completing the Project

1. After you complete the project, return the spoils back into the trench with the optional backfill blade or other soil moving equipment.
   A. Move the machine to the end of the trench, a few meters (feet) away from the spoil pile.
   B. Aim the machine at the outer edge of the pile.
   C. Adjust the blade of the machine to fit the slope of the ground.
   D. Move the outer edge of the spoil pile toward the trench.

      Note: Make at least 2 passes at the pile to move it.

   E. Repeat the steps above for the spoil pile on the other side of the trench.
   F. Float the backfill blade over the length of the trench.
2. Spray the dirt and mud off the machine with water.

   Important: Do not spray the console or electrical components with water.
3. Transport the machine from the completed work site; refer to Transporting the Machine (page 39).

Maintenance

Recommended Maintenance Schedule(s)

Maintenance Service Interval	Maintenance Procedure
After the first 100 hours	• Check the oil level in the wheel hubs. • Check the oil level in the front and rear axles.
After the first 200 hours	• Change the oil in the wheel hubs. • Change the oil in the axles.
Before each use or daily	• Drain the water and sediment from the fuel-water separator. • Check the engine-oil level. • Check the coolant level in the reservoir. • Check the hydraulic fluid level in the reservoir. • Check the restricted air-cleaner indicator for a restricted air cleaner. • Inspect the machine. • Check the crankcase breather tube. • Check the air-intake piping for wear, damage, and loose fasteners. • Drain the water from the fuel tank. • Check the tires and wheels for damage.
Every 50 hours	• Maintain the proper air pressure in the tires. • Check the coolant level in the radiator.
Every 100 hours	• Check the oil level in the transmission.
Every 250 hours	• Grease the front and rear axles. • Check the charge-air piping. • Check the air-intake piping for wear, damage, and loose fasteners. • Check the oil level in the wheel hubs. • Check the oil level in the front and rear axles. • Check the condition of the engine drive belt.
Every 300 hours	• Check the condition of the coolant system components. • Clean dirt and debris from them and repair or replace damaged cooling system components as necessary.
Every 500 hours	• Grease the drive shaft. • Change the engine oil and filter. • Service the fuel filter system. • Change the transmission filter. • Change the hydraulic-charge filter. • Change the hydraulic-return filter. • Check and maintain the ROPS; check it after an accident.
Every 1,000 hours	• Replace the fuel tank breather. • Change the oil in the wheel hubs. • Change the oil in the axles. • Clean the axle breather for each axle. • Change the transmission oil. • Check the concentration of the coolant. • Change the hydraulic fluid and replace the breather.
Every 2,000 hours	• Clean the cooling system.

Premaintenance Procedures

General Safety

⚠ WARNING

Improperly servicing or repairing the machine can cause injury or death.

If you do not understand the service procedures for this machine, contact an Authorized Toro Service Dealer or obtain the service manual for this machine.

⚠ WARNING

Leaving a machine with raised attachments unattended can cause injury or death.

Before you leave the operating area, always support or lower the equipment to the ground and stop the engine.

⚠ WARNING

Replace all covers and guards after you service or clean the machine. Never operate the machine without the covers or guards in place.

1. Park the machine on a level surface.
2. Lower all attachments, stop the engine, and remove the key.
3. Allow the engine to cool 2 or 3 minutes.
4. Remove the right-side panel; refer to Removing the Side Panels (page 44).
5. Rotate the battery-disconnect switch to the Off position; refer to Battery-Disconnect Switch (page 20).

Lubrication

Greasing the Machine

Grease Type: Lithium-based grease.

Greasing the Front and Rear Axles

Service Interval: Every 250 hours

1. Clean the grease fittings with a rag.
2. Connect the grease gun to the grease fittings for the upper and lower pivots; apply 2 or 3 pumps of grease to each fitting (Figure 54 and Figure 55).

   Note: There are 2 grease fittings at the axle pivot for each tire.

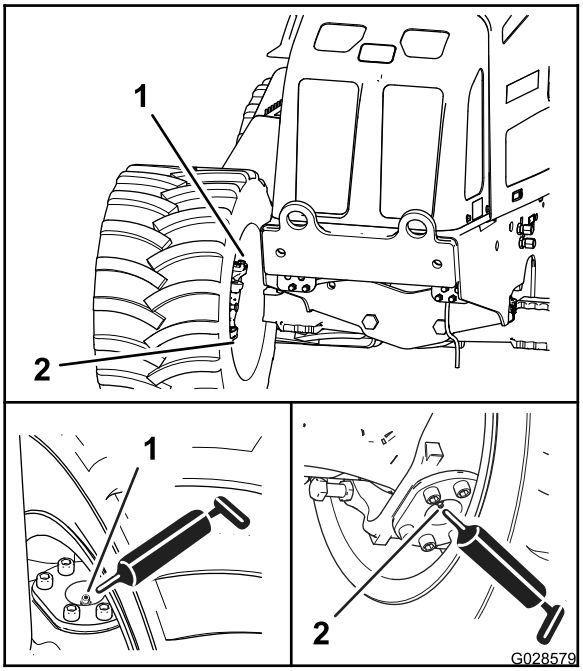

Figure 54
Front axle

1. Grease fitting (upper pivot) 2. Grease fitting (lower pivot)

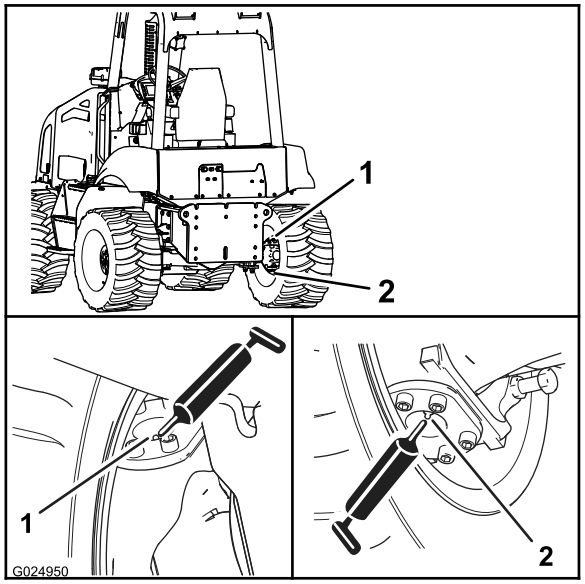

Figure 55
Rear axle

1. Grease fitting (upper pivot) 2. Grease fitting (lower pivot)

3. Connect the grease gun to the grease fittings for the forward- and rear-axle tilt pivots; apply 2 or 3 pumps of grease to each fitting (Figure 56).

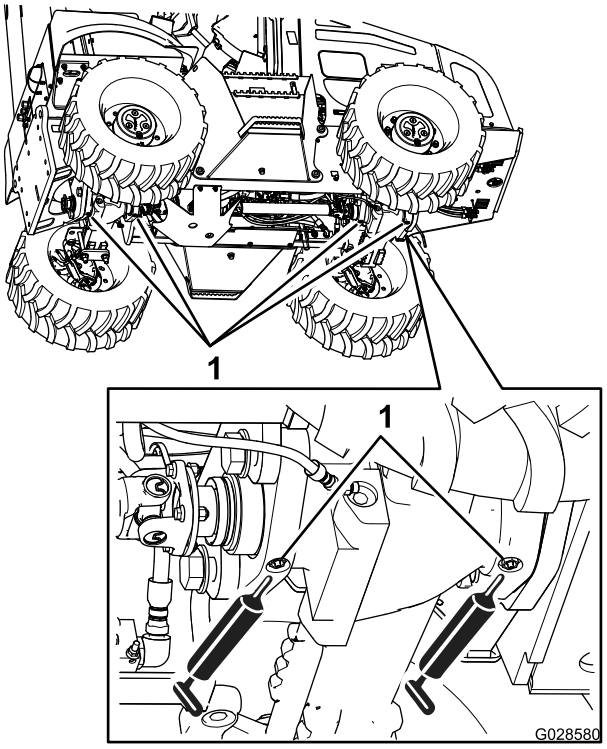

Figure 56

1. Grease fittings (4)

4. Wipe up any excess grease.

Greasing the Front and Rear Drive Shafts

Service Interval: Every 500 hours

1. Clean the grease fittings with a rag.
2. Connect the grease gun to the grease fitting for the slide coupling at the forward end of the drive shaft, and apply 2 or 3 pumps of grease to the fitting (Figure 57).

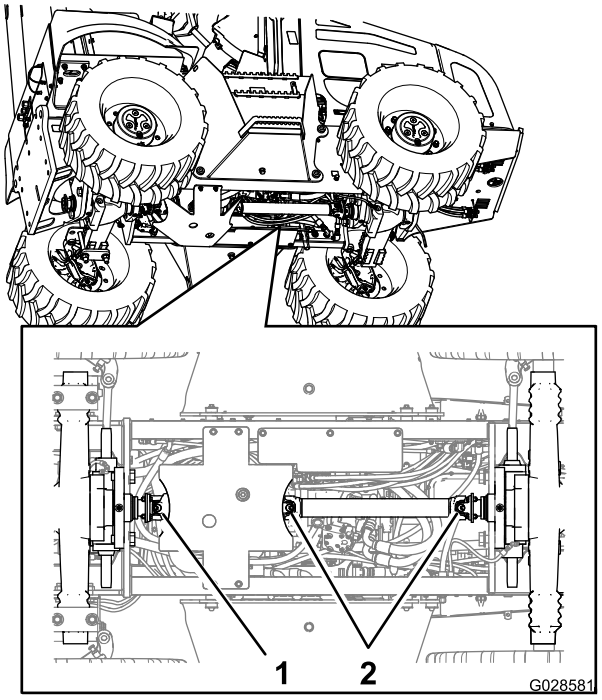

Figure 57

1. Grease fitting (back universal joint) 2. Grease fitting (forward universal joint)

3. Connect the grease gun to the grease fitting for the universal joint at the forward end of the drive shaft, and apply 2 or 3 pumps of grease to the fitting (Figure 57).
4. Connect the grease gun to the grease fitting for the universal joint at the back end of the drive shaft, and apply 2 or 3 pumps of grease to the fitting (Figure 57).
5. Wipe up any excess grease.

Engine Maintenance

Before maintaining the engine, perform the following steps:

1. Park the machine on level ground, lower all attachments, and stop the engine.
2. Remove the ignition key and allow the engine to cool for 2 or 3 minutes.

Accessing the Engine

Removing the Side Panels

1. If the optional backhoe is installed, perform the following substeps to remove the left side panel; otherwise, skip to step 2:

   A. At the left side of the machine, remove the retaining pin from the front end of the walkway (Figure 58).

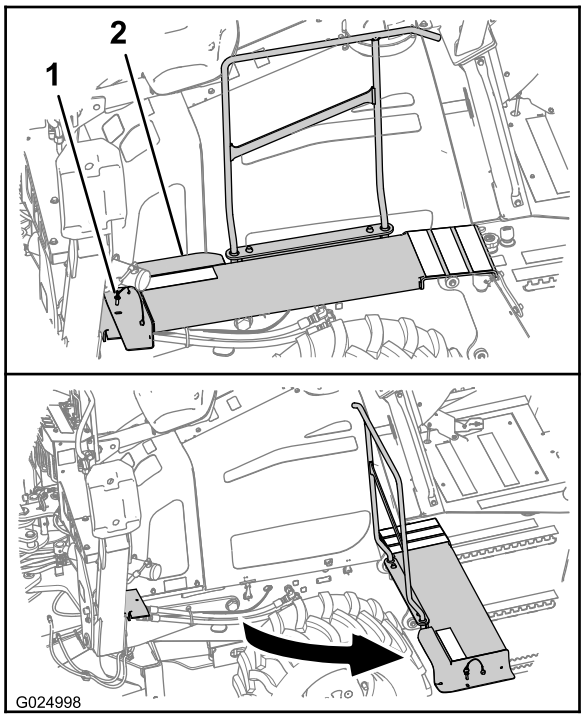

Figure 58

1. Retaining pin
2. Walkway

   B. Pivot the walkway away from the machine as shown in Figure 58.

2. If the side panel is locked, insert the key for the side-panel latches into the cylinder of the lock and unlock the latch.

   Note: The key for the side-panel latch is a different key from the one use to start and run the machine.

3. Press in the button portion of each latch—the part of the latch including the lock cylinder (Figure 59).

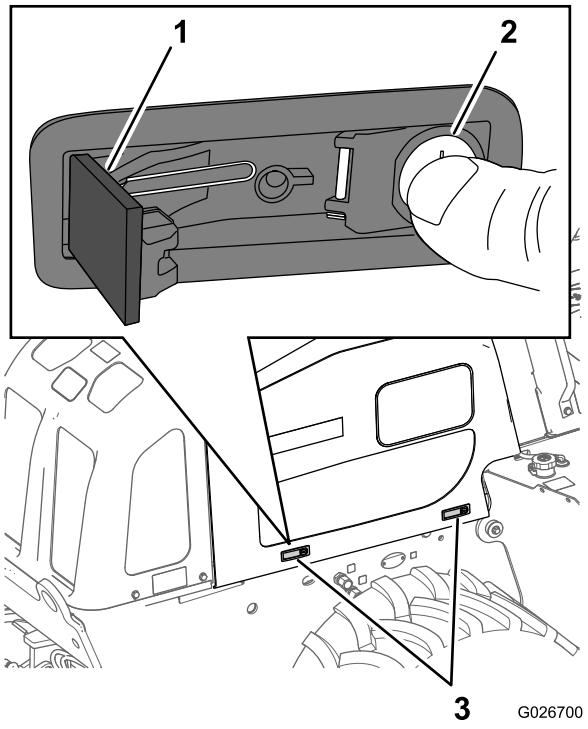

Figure 59

1. Latch lever
2. Latch button
3. Side-panel latch

4. Lift the panel up and then away from the machine (Figure 60).

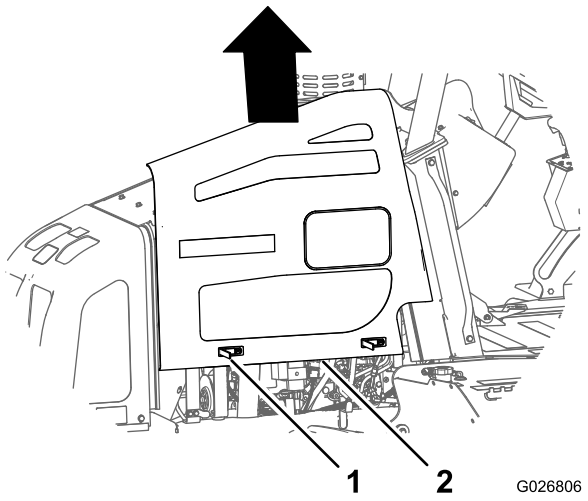

Figure 60

1. Latch
2. Side panel

Installing the Side Panels

1. Align the side panel with the machine frame.
2. Align the mounting bolt at the top of the side panel with the hole in the support flange of the hood panel (Figure 61).

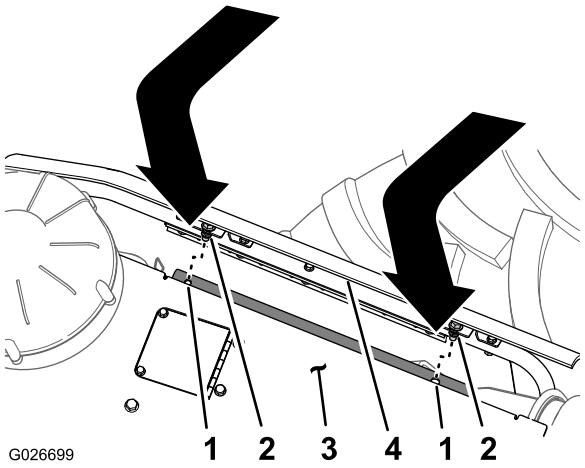

Figure 61

1. Hole (support flange—hood panel)
2. Mounting bolt
3. Hood panel
4. Side panel

3. Apply light inward pressure against the panel at 1 of the latches.
4. Set the latch by pushing in the latch lever (Figure 59).
5. Repeat steps 3 and 4 at the other latch.
6. If the backhoe is installed on the machine, do the following substeps:
   A. Rotate the front end of the walkway to its original position (Figure 58).
   B. Align the hole in the walkway with the hole in the walkway support bracket (Figure 58).
   C. Install the retaining pin through the holes.

Servicing the Engine Oil and Filter

Crankcase capacity: 15.0 L (15.9 US qt) with the filter.

Use only high-quality SAE 15W-40 heavy-duty engine oil with an API classification of CH-4 or higher.

While SAE 15W-40 oil with an API classification of CH-4 or higher is recommended for most climates, refer to Figure 62 for oil viscosity recommendations for extreme climates.

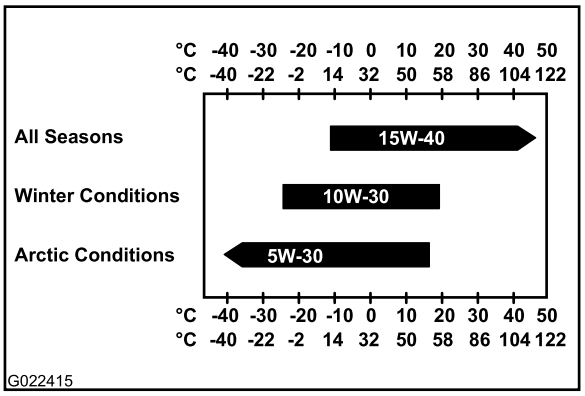

Figure 62

Note: Limited use of low-viscosity oils such as SAE 10W-30 with an API classification of CH-4 or higher can be used for easier starting and providing sufficient oil flow at ambient temperatures below -5°C (23°F). However, continuous use of low viscosity oil can decrease engine life because of wear.

Toro Premium Engine Oil is available from an Authorized Toro Service Dealer in either 15W-40 or 10W-30 viscosity with API classification CH-4 or higher. See the *Parts Catalog* for part numbers. Also, refer to the *Engine Operator's Manual*, included with the machine, for further recommendations.

Changing the Engine Oil and Filter

Service Interval: Every 500 hours

Draining the Engine Oil

1. Run the engine until the water temperature reaches 60°C (140°F).

   Note: Warm oil drains better and carries more contaminants.
2. Stop the engine.
3. Remove the right side panel; refer to Removing the Side Panels (page 44).
4. Place a drain pan that has a minimum capacity of 20 L (21 US qt) under the engine-oil drain fitting (Figure 63).

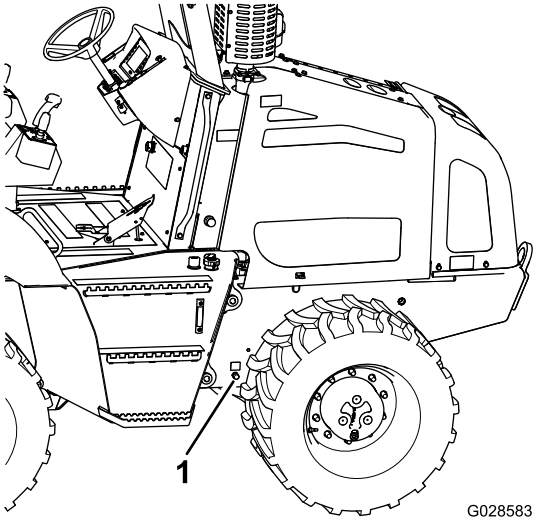

Figure 63

1. Engine-oil drain fitting

5. Remove the cap from the drain fitting and allow the engine oil to drain completely (Figure 63).

   Note: Removing the oil-fill cap from the valve cover helps to drain the engine oil (Figure 64).

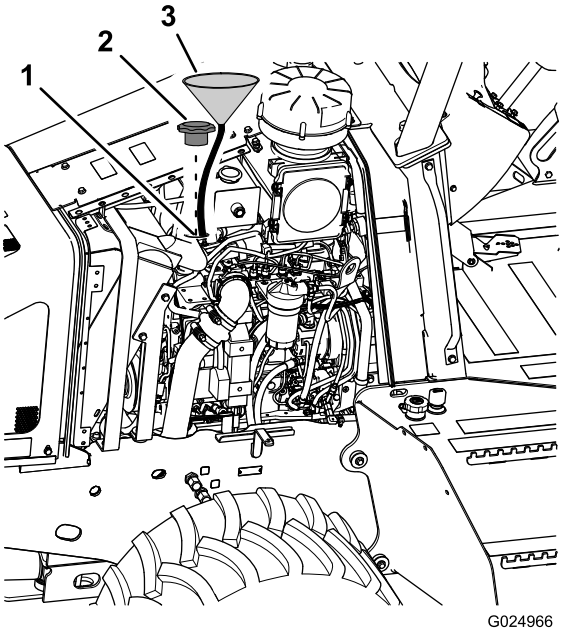

Figure 64

1. Filler neck
2. Oil-fill cap
3. Funnel

6. Clean the mating surfaces of the cap and the drain fitting.
7. Install the cap onto the drain fitting (Figure 63).

Changing the Engine Oil Filter

1. Remove the right side panel; refer to Removing the Side Panels (page 44).
2. Place a small drain pan under the oil filter (Figure 65).

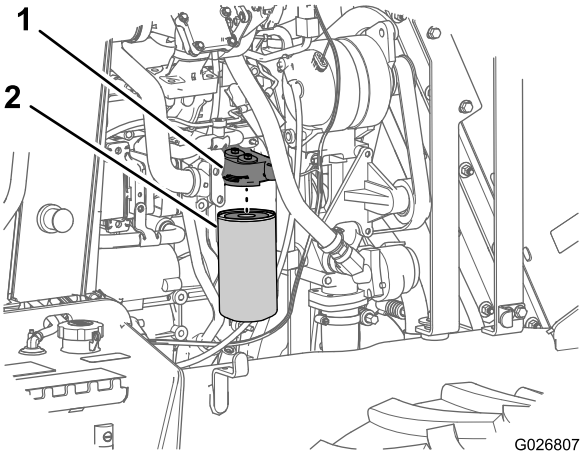

Figure 65

1. Oil-filter head
2. Oil filter

3. Rotate the oil filter to the left and remove the oil filter (Figure 65).

   Note: Recycle the used oil filter according to local codes.

4. Use a rag to wipe clean the surface of the oil-filter head, where the oil filter seats.
5. Fill the new oil filter with the specified engine oil.
6. Apply a thin layer of the engine oil to the seal of the new oil filter.
7. Align the new oil filter to the oil-filter head and rotate the filter to the right until the seal of the oil filter contacts the oil-filter head (Figure 65).
8. Hand tighten the oil filter an additional 3/4 to 1 full turn (Figure 65).

   Note: Do not use an oil filter wrench to tighten the new oil filter. The wrench can dent an oil filter, causing a leak.

9. Remove the small oil pan from under the oil filter.
10. Wipe up any spills and recycle the used oil according to local codes.
11. Install the side panel; refer to Installing the Side Panels (page 45).

Filling the Engine with Oil

1. Remove the oil-fill cap from the valve cover by rotating the cap and pulling it upward (Figure 63).

   Note: Use a funnel with a flexible hose to direct the engine oil into the engine.

2. Fill the crankcase with approximately 15.0 L (15.9 US qt) of the specified engine oil; refer to Servicing the Engine Oil and Filter (page 45).
3. Install the oil-fill cap.
4. Start the engine, run it at idle for about 2 minutes, and check for oil leaks.

Important: **The oil pressure gauge must indicate engine oil pressure within 15 seconds after you start the engine. If there is no indication of engine oil pressure within 15 seconds, shut off the engine immediately to avoid damaging the engine and check that the engine oil level is correct.**

5. Stop the engine and remove the key.
6. Wait 5 minutes and check the oil level; refer to steps 4 through 8 in Checking the Engine-Oil Level (page 24).
7. Install the side panel; refer to Installing the Side Panels (page 45).

Checking the Crankcase Breather Tube

Service Interval: Before each use or daily

1. Inspect the crankcase breather tube (Figure 66) for sludge, debris, or ice inside the tube.

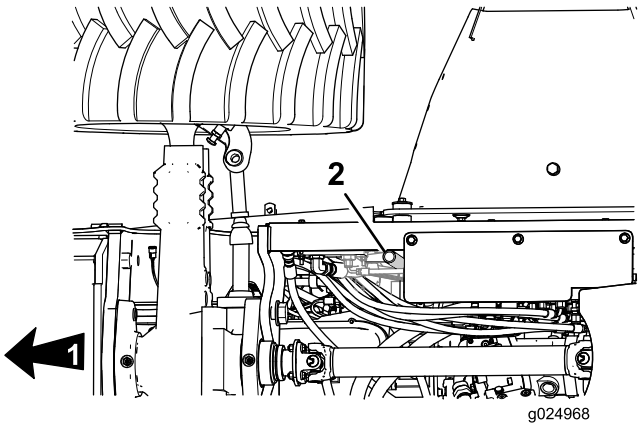

Figure 66

1. Front of machine
2. Crankcase breather tube

2. If you find sludge, debris, or ice inside the breather tube, clean the tube with detergent and warm water or a solvent.
3. Dry the tube with compressed air.
4. Inspect the tube for cracks or damage; replace a cracked or damaged tube; refer to an Authorized Toro Dealer.

Checking the Charge-air Piping

Service Interval: Every 250 hours

Inspect the charge-air piping and hoses (Figure 67) for leaks, holes, cracks, or loose connections, and tighten any loose connections.

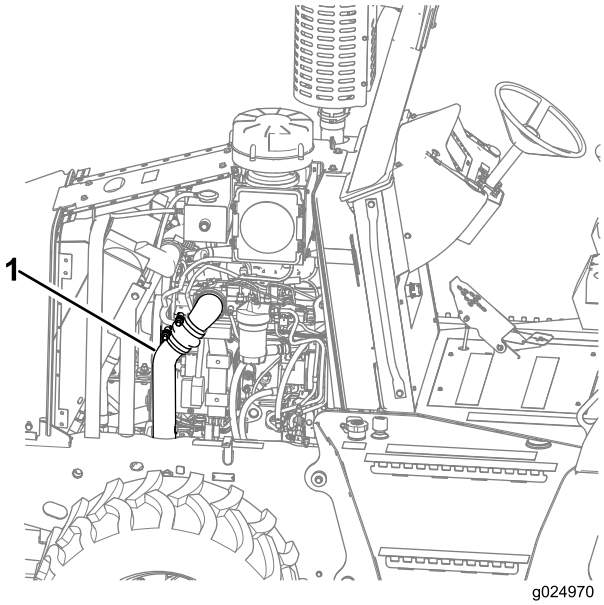

Figure 67

1. Charge-air pipe (right)

Servicing the Air-cleaner System

Important: **Do not remove the air-cleaner elements from the machine and operate the engine to check for a restriction; dirt and debris could enter the engine and cause premature wear. Always follow the instructions in the following procedures.**

Note: Check the primary and secondary air-cleaner elements when the restricted air-cleaner light comes on.

Note: Do not replace an old air cleaner element with an element that is more than 5 years old; check the date of manufacture on the end cap of the element.

Note: Every time you service the air cleaner system, ensure that all hose connections and flanges are air tight. Replace all damaged parts.

Checking the Air-intake Piping

Service Interval: Before each use or daily—Check the air-intake piping for wear, damage, and loose fasteners.

Every 250 hours—Check the air-intake piping for wear, damage, and loose fasteners.

Inspect the air-intake piping for wear, damage, and loose clamps (Figure 68).

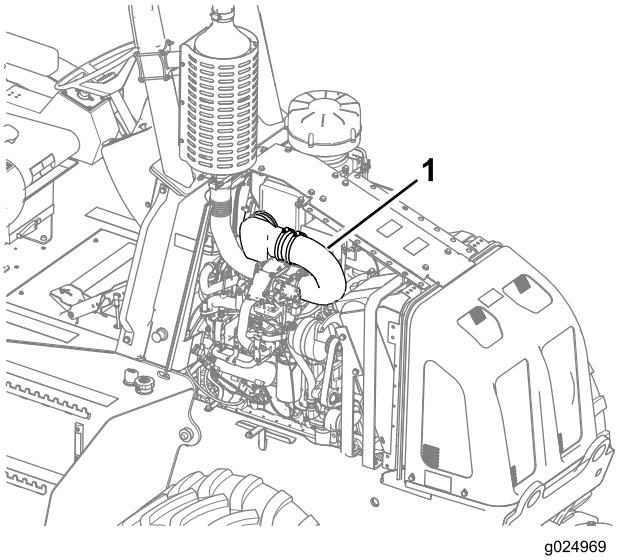

Figure 68

1. Charge-air pipe (left)

- Replace all damaged pipes, and tighten loose clamps to prevent the air system from leaking.

  Note: Torque the loose clamps to 8 N-m (72 in-lb).

- Check for corrosion under the clamps and hoses. Corrosion can allow corroded debris and dirt to enter the intake system. Disassemble and clean the clean the components as necessary.

Replacing the Air-cleaner Elements

Important: Do not try to clean a dirty primary or secondary air-cleaner element.

1. Remove the left side panel; refer to Removing the Side Panels (page 44).
2. Unlatch the 4 latches that hold the air-cleaner cover and remove the cover (Figure 69).

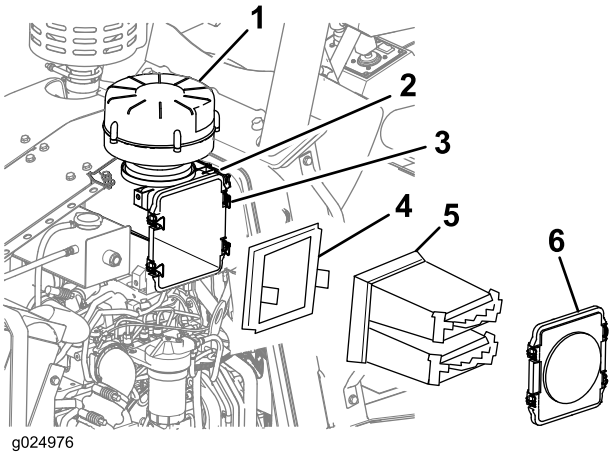

Figure 69

1. Air pre-cleaner
2. Air-cleaner housing
3. Latch (4)
4. Secondary air-cleaner element
5. Primary air-cleaner element
6. Air-cleaner cover

3. Remove the primary and secondary air-cleaner elements from the air-cleaner housing (Figure 69).
4. Use a clean damp cloth to clean the inside of the cleaner housing (Figure 69).
5. Inspect the primary air-cleaner element, and replace it if it is damaged or excessively dirty.
6. Inspect the secondary air-cleaner element and replace it if it is damaged.

   Note: Replace the secondary air-cleaner element after you have replaced the primary air-cleaner element 3 times or if the air-cleaner restriction indicator comes on while the engine is running and you have already replaced primary air-cleaner element.
7. If you replace the element(s), write the current date and the engine hours on the new air-cleaner element(s) with a permanent marking pen.
8. Insert the secondary air-cleaner element into the air-cleaner housing.
9. Insert the primary air-cleaner element into the air-cleaner housing.
10. Secure the air-cleaner cover to the air-cleaner housing with the 4 latches on the housing (Figure 69).
11. Install the left side panel; refer to Installing the Side Panels (page 45).
12. Start the engine and check the restricted air-cleaner indicator; refer to Checking the Restricted Air-Cleaner Indicator (page 26).

Fuel System Maintenance

Servicing the Fuel System

Draining Water from the Fuel Tank

Service Interval: Before each use or daily

1. Stop the engine.
2. Place a drain pan under the drain plug in the fuel tank.
3. Unscrew the drain plug from the fuel tank and drain the water (Figure 70).

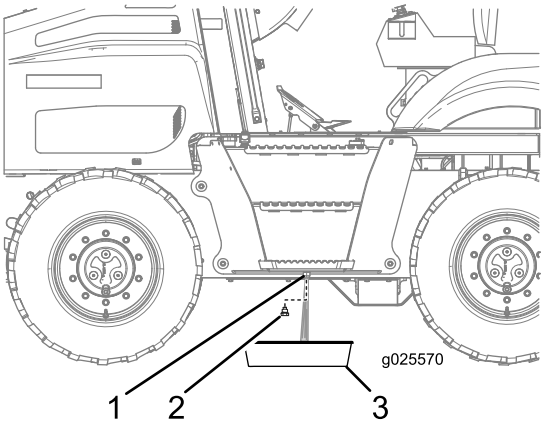

Figure 70

1. Fuel tank
2. Drain plug
3. Drain pan

4. When clean fuel appears, install the drain plug and tighten it securely (Figure 70).
5. Check the fuel tank drain plug for leaks.

Siphoning Water from the Fuel Tank

Note: Siphoning water from the fuel tank is an alternative to draining water from the fuel tank; refer to Draining Water from the Fuel Tank (page 49).

1. Remove the fuel cap from the fuel tank (Figure 71).

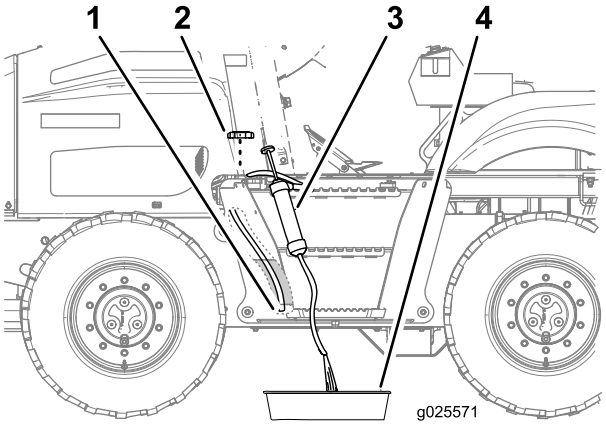

Figure 71

1. Intake hose (bottom of the tank)
2. Fuel cap
3. Siphoning equipment
4. Drain pan

2. Route the intake hose of the siphoning equipment through the filler neck of the fuel tank and to the bottom of the tank (Figure 71).
3. Direct the discharge hose of the siphoning equipment into a drain pan (Figure 71).
4. Siphon the tank until clean fuel appears.
5. Remove the siphoning equipment from the tank.
6. Install the fuel cap onto the filler neck of the fuel tank (Figure 71).

Replacing the Fuel Tank Breather

Service Interval: Every 1,000 hours

1. Remove the left side panel; refer to Removing the Side Panels (page 44).
2. At the forward side of the engine compartment panel, remove the breather from the pipe coupling by rotating the breather counterclockwise (Figure 72).

   Note: Discard the old breather.

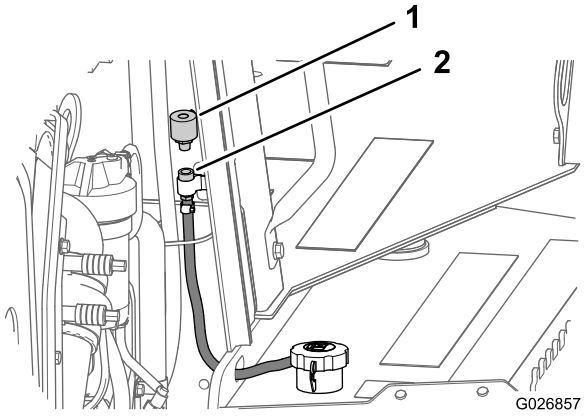

Figure 72

1. Fuel tank breather
2. Pipe coupling

3. Install a new breather into the pipe coupling hand tight (Figure 72).
4. Install the right side panel; refer to Installing the Side Panels (page 45).

Replacing the Fuel Filters

Service Interval: Every 500 hours

The engine on this machine uses a dual fuel-filter system, with a primary fuel filter and a secondary fuel filter. The primary fuel filter includes a fuel-water separator; it is not pressurized but operates under a vacuum. The secondary fuel filter is for filtration only and is pressurized by the fuel pump.

Removing the Primary and Secondary Fuel Filters

Important: Clean all around the filter area before disassembling the fuel filter system. Dirt or contaminants can damage the fuel system.

1. Rotate the battery disconnect switch to the Off position; refer to Battery-Disconnect Switch (page 20).
2. Remove the right side panel; refer to Accessing the Engine (page 44).
3. Clean the area around the primary and secondary fuel filters.
4. Disconnect the wiring harness from the water-in-fuel sensor.

   Note: The water-in-fuel sensor is located at the bottom of the fuel/water separator, next to the drain valve.
5. Place a small-drain container under the drain valve of the fuel water separator ; refer to Draining Water from the Fuel-Water Separator (page 23).

   Note: The primary fuel filter is a component of the fuel/water separator.
6. Open the drain valve and allow the fuel-water separator to drain completely; refer to Draining Water from the Fuel-Water Separator (page 23).
7. Loosen and remove the primary fuel filter (Figure 73).

   Note: If necessary, use a filter wrench to loosen the fuel filter.

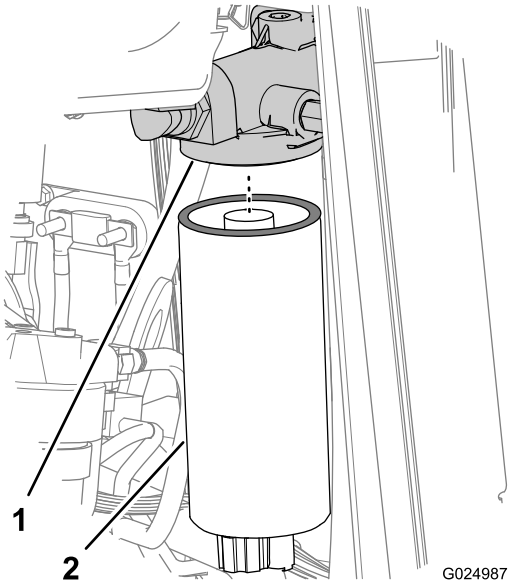

Figure 73

1. Filter adapter (primary fuel filter)
2. Primary-fuel filter (fuel/water separator)

8. Place a small-drain container under the secondary fuel filter.
9. Loosen and remove the secondary fuel filter (Figure 74).

   Note: If necessary, use a filter wrench to loosen the fuel filter.

   Note: Ensure that the O-ring does not stick to the fuel filter head. Remove the O-ring with an O-ring pick, if necessary.

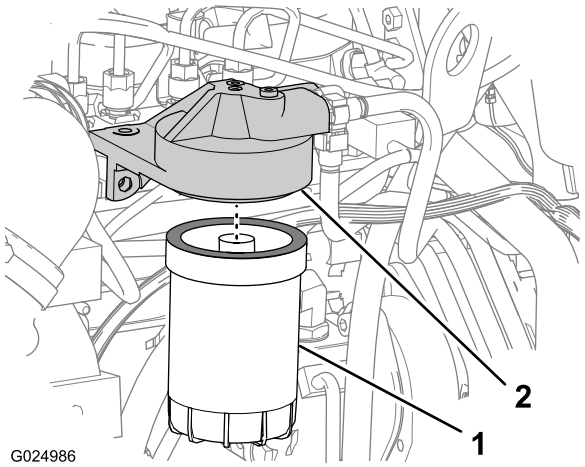

Figure 74

1. Secondary fuel filter
2. Filter adapter (secondary fuel filter)

Installing the Primary- and Secondary-Fuel Filters

Important: Do not pre-fill the pressure-side fuel filter with fuel unless you use a clean side block-off plug. Pre-filling the pressure-side fuel filter *without the use of*

***a side block-off plug* can allow debris to enter the fuel system and damage fuel system components.**

Important: If possible, pre-fill new primary- and secondary-fuel filters with clean fuel prior to assembly using the clean side block-off plug packed with the filter. Do not pour fuel directly into the center of the filter, because this will allow unfiltered fuel to enter the system and may damage the fuel system components.

Note: You must prime the system after you install the fuel filters.

1. Wipe clean the sealing surfaces of the filter adapters for the primary- and secondary-fuel filters (Figure 73 and Figure 74).
2. Lubricate the seals for the fuel filters with clean engine oil.
3. Install the primary-fuel filter onto the filter adapter, and tighten the filter until the gasket contacts the filter head surface (Figure 73).
4. Tighten the fuel filter an additional 3/4 turn after contact.

   Important: Do not overtighten the fuel filter.
5. Connect the wiring harness to the water-in-fuel sensor.
6. Install the secondary-fuel filter onto the filter adapter, and tighten the filter until the gasket contacts the filter head surface (Figure 74).
7. Tighten the fuel filter an additional 3/4 turn after contact.

   Important: Do not overtighten the fuel filter.
8. Bleed the air from the fuel system by priming the system; refer to Priming the Fuel System (page 51).

Priming the Fuel System

⚠ WARNING

The fuel system is under high pressure. Bleeding the system without proper precautions and training could result in injury to you from injected fluid or fire or explosion.

- **Do not loosen any fittings while the engine is running.**
- **Read the engine owner's manual for the proper bleeding procedure or contact your Authorized Toro Service Dealer.**

Prime the fuel system to remove air from the system after the following events:

- The engine has run until the fuel tank is empty.
- The fuel filters are replaced.
- Parts of the fuel system are removed for repair.

1. Ensure that there is fuel in the fuel tank.
2. Rotate the battery-disconnect switch clockwise to the On position; refer to Battery-Disconnect Switch (page 20).
3. Clean the fuel-pump head and the priming pump using a quick-dry spray cleaner and compressed air (Figure 75).

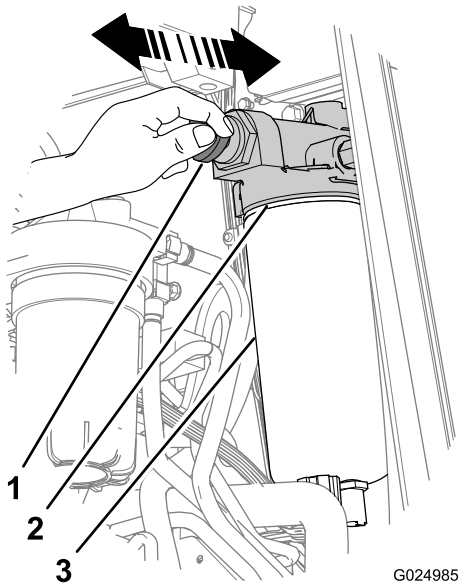

Figure 75

1. Priming-pump handle
2. Fuel-pump head
3. Fuel/water separator

4. Unlock the priming-pump handle by turning it **counterclockwise** (Figure 75).
5. Pump the primer handle (Figure 75) until you feel resistance and the handle cannot be pumped anymore (approximately 140 to 150 strokes for dry filters or 20 to 60 strokes for pre-filled filters).
6. Lock the manual priming pump handle by turning it clockwise until it is fully seated (Figure 75).
7. Start the engine; refer to Operating the Engine (page 33).

   Important: Do not engage the starter motor for more than 10 seconds at a time. Allow 2 minutes between cranking intervals.

   Note: If the engine does not start after priming the fuel system and making several attempts to start the engine, bleed the high-pressure fuel lines; refer to your engine owner's manual or contact your Authorized Toro Service Dealer for assistance.
8. If the engine does not start, pump the priming pump and repeat steps 4 through 7 until the engine starts.

   Note: When the engine starts, it may run erratically and louder than normal for a few minutes. This is normal, as air is being purged from the system.
9. Operate the engine until it runs smoothly, then check for any leaks.

Electrical System Maintenance

Maintaining the Battery

Accessing the Battery

Remove the battery cover as follows:

1. Ensure that the battery-disconnect switch is in the Off position; refer to Battery-Disconnect Switch (page 20).
2. Remove the 2 finger-pull covers from the holes in the battery cover.
3. Remove the 4 bolts that secures the battery cover to the ROPS platform (Figure 76).

   Note: The battery cover is located between the operator seat and the rear ROPS bulkhead.

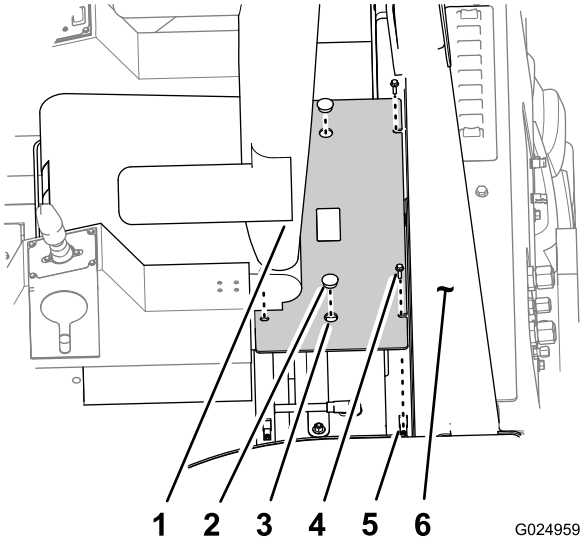

Figure 76

1. Operator seat
2. Finger-pull cover
3. Hole (battery cover)
4. Bolt
5. Nut clip
6. ROPS bulkhead

4. Using the finger pulls, lift the battery cover up to remove it from the ROPS platform

Install the battery cover as follows:

1. Align the holes in the mounting flanges for the battery cover with the plate nuts in the ROPS platform around the battery (Figure 76).
2. Secure the battery cover to the ROPS platform with the 4 bolts (Figure 76).
3. Install the 2 finger-pull covers into the holes of the battery cover.

Servicing the Battery

⚠ WARNING

Exposure to battery acid or a battery explosion can cause serious personal injury.

Before you service a battery, always wear face protection, protective gloves, and protective clothing.

⚠ WARNING

A battery contains sulfuric acid, which can cause serious burns; and they can produce explosive gases.

- **Avoid contact with skin, eyes, or clothing; flush affected areas with water.**
- **If taken internally, drink large quantities of water or milk. *Do not* induce vomiting. Seek medical attention immediately.**
- **Keep sparks, flames, and lit cigarettes and cigars away from the battery.**
- **Ventilate the battery when you are charging it or using it in an enclosed area.**
- **Wear eye protection when working near a battery.**
- **Wash your hands after handling a battery.**
- **Keep the battery out of the reach of children.**

⚠ WARNING

A frozen battery can be explosive, causing personal injury to you or others in the area, if you try to charge the battery or try to jump start the battery and run the engine.

To prevent the battery electrolyte from freezing, keep the battery fully charged.

⚠ WARNING

Sparks or a flame can cause hydrogen gas in a battery to explode.

When you disconnect the battery cables, always disconnect the negative (-) cable first.

When you connect the battery cables, always connect the negative (-) cable last.

Do not short-circuit the battery posts with a metal object.

Do not weld, grind, or smoke near a battery.

Note: The electrical system in this machine is 12 volts.

Connecting a Booster Battery

⚠ WARNING

Charging the battery produces gasses that can explode.

Never smoke near the battery and keep sparks and flames away from battery.

Note: This procedure requires 2 people to perform. Ensure that the person making the electrical connections wears the proper face protection, protective gloves, and clothing.

1. Ensure that all controls are in the Neutral position and that the parking brake is in the On position.
2. Sit in the operator seat and have the other person make the connections.

   Note: Ensure that the jumper battery is a 12-volt battery.

   Important: If you are using another machine for power, ensure that the 2 machines are not touching each other.
3. Ensure that the battery-disconnect switch is in the On position; refer to Battery-Disconnect Switch (page 20).
4. Remove the cover from the jump post (Figure 77).

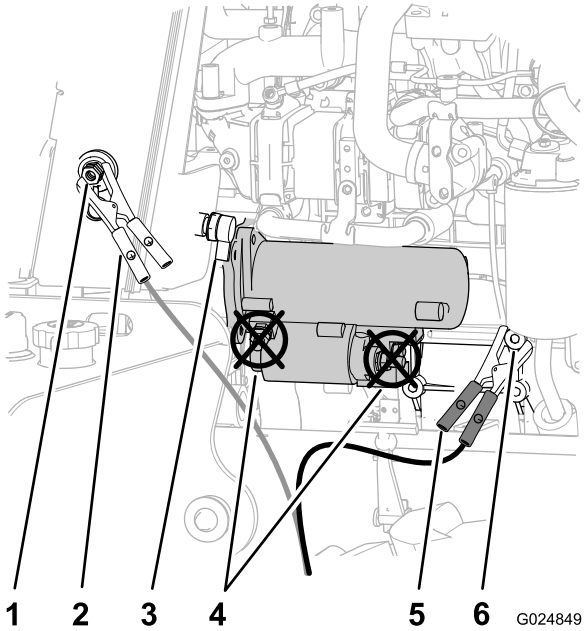

Figure 77

1. Jump post
2. Jumper-cable clamp (positive)
3. Battery disconnect switch
4. Starter terminals (**Do not use**)
5. Jumper-cable clamp (negative)
6. Ground point (engine case)

5. Connect the positive (+) jumper cable to the jump post (Figure 77).
6. Connect the negative (-) jumper cable to a ground point, such as the nut at the pivot point for the alternator (Figure 77).
7. Start the engine; refer to steps 1 through 4 in Starting the Engine (page 33).

   Note: If the engine starts and then stops, **do not** operate the starter motor until the starter motor stops turning. **Do not** operate the starter motor for more than 30 seconds at one time. Wait 30 seconds before operating the starter motor to cool the motor and to build up the charge in the battery.
8. When the engine starts, have the other person disconnect the negative (-) jumper cable from the frame and then disconnect the positive (+) jumper cable.

Charging the Battery

⚠ WARNING

Charging the battery produces gasses that can explode.

Never smoke near the battery, and keep sparks and flames away from the battery.

Important: Always keep the battery fully charged. This is especially important to prevent battery damage when the temperature is below 32°F (0°C).

1. Clean the exterior of the battery case and the battery posts.

   Note: Connect the leads of the battery charger to battery posts before connecting the charger to the electrical source.
2. Connect the positive lead of the battery charger to the positive-battery post (Figure 79).

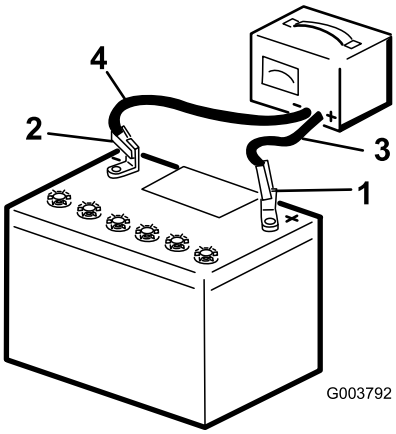

Figure 78

1. Positive-battery post
2. Negative-battery post
3. Red (+) charger lead
4. Black (-) charger lead

3. Connect the negative lead of the battery charger to the negative-battery post (Figure 78).

4. Connect the battery charger to the electrical source.

   Important: Do not overcharge the battery.

   Note: Charge the battery as shown in the following table:

Battery Charging Settings and Times

Charger Setting	Charging Time
4 to 6 amperes	30 minutes
25 to 30 amperes	10 to 15 minutes

5. When the battery is fully charged, unplug the charger from the electrical source, then disconnect the charger leads from the battery posts (Figure 78).

Replacing a Fuse

1. Remove the left and right side panel; refer to Removing the Side Panels (page 44).
2. Rotate the battery-disconnect switch counterclockwise to the Off position (Figure 79).

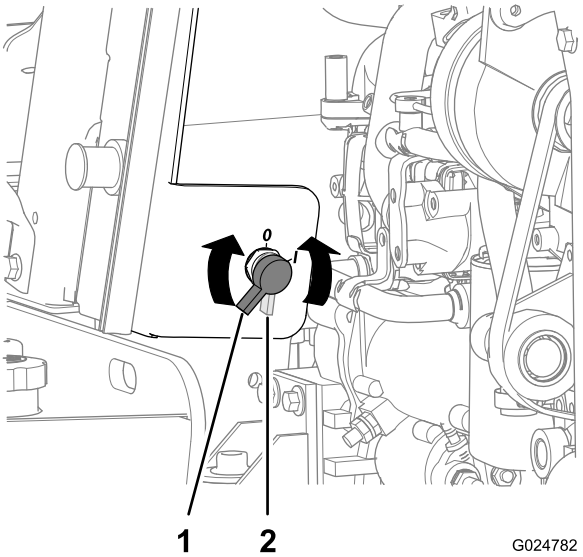

Figure 79

1. Battery-disconnect switch in the On position
2. Battery-disconnect switch in the Off position

3. Remove the 4 hex-flanged bolts (5/16 x 3/4 inch) that secure the cover to the console and remove the cover (Figure 80).

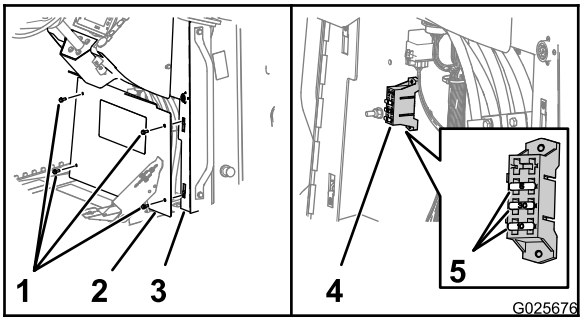

Figure 80

1. Hex-flanged bolts (5/16 x 3/4 inch)
2. Cover
3. Console
4. Fuse block
5. Fuses

4. Locate the open fuse and replace it with a fuse of the same type and amperage (Figure 80).
5. Check that the new electrical components function.
6. Align the hole in the cover with the nut clips on the flanges of the console (Figure 80).
7. Secure the cover to the console with the 4 hex-flanged bolts that you removed in step 3.
8. Rotate the battery-disconnect switch clockwise to the On position (Figure 79).
9. Install the left and right side panel; refer to Installing the Side Panels (page 45).

Drive System Maintenance

Servicing the Tires

⚠ WARNING

Exploding tires and/or rim parts can cause injury or death.

Keep yourself and others out of the area of danger. Stand on the tread side of the tire. Always fill the tires to the correct air pressure, and follow the instructions in this manual for adding air or servicing the tires.

⚠ WARNING

Do not weld the wheel or rim with the tire installed. Welding with an explosive air/gas mixture can ignite, causing serious injury or death, regardless of whether the tire is inflated or deflated.

Removing the air or breaking the bead is not adequate; you must completely remove the tire from the rim before welding.

⚠ WARNING

An explosive separation of the tire and/or rim parts can cause injury or death.

Have a qualified tire mechanic service the tire.

Checking the Tires and Wheels

Service Interval: Before each use or daily

1. Check each tire for embedded objects, separated plies, missing tread, bulges, or a damaged bead, and replace it, if necessary.
2. Check each wheel for signs of unusual bending or damage, and replace it, if necessary.

Maintaining the Air Pressure in the Tires

Service Interval: Every 50 hours

Important: Maintain the air pressure in the tires at 310 kPa (45 psi).

1. Measure the air pressure in the tires; if the tire pressure is not at the recommended pressure, complete the rest of this procedure.

   Important: Use an air hose with a remote shutoff valve and a self-locking chuck.

   Note: Before you add air, ensure that the tire is properly installed on the machine, or put the wheel in a restraining device, such as a tire inflation cage.
2. Remove the cap from the valve stem.
3. Attach the self-locking chuck of the air hose to the valve stem.
4. When inflating the tire while it is mounted to the machine, stand behind the tread of the tire.

   Note: Ensure that all persons are away from the side of the tire before you start to add air.
5. Open the remote shutoff valve to inflate the tire to the specified pressure, then close the valve.

   Important: Do not inflate the tire more than the recommended pressure.
6. Remove the air chuck from the valve stem.
7. Install the cap on the valve stem.

Maintaining the Tires and Wheels

Always have a qualified tire technician service the tires and wheels of this machine. To prevent accidents, use a restraining device (such as a tire inflation cage), the correct equipment, and the correct procedure.

Important: There are 2 different tire-tread pattern and wheel combinations; the left-side tires and the right-side tires are different. Ensure that the tread direction of the tire and the valve stem in the wheel are correctly aligned before installing the tire to the rim.

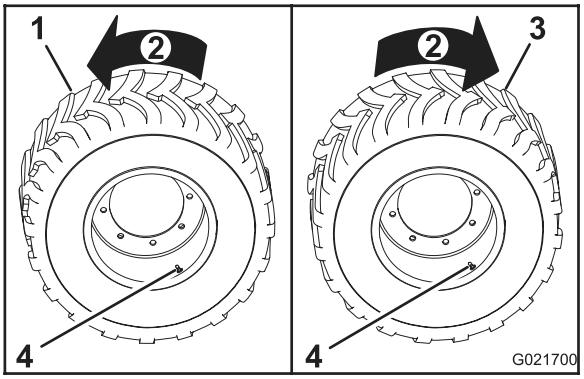

Figure 81

1. Left-side tire
2. Forward
3. Right-side tire
4. Valve stem

Torquing the Wheel Nuts

1. Ensure that the mounting flange of the wheel is flush against the mounting flange of the axle.
2. Incrementally torque the wheel nuts for each wheel as follows:
   A. Torque the all wheel nuts to 100 N-m (75 ft-lb) in the sequence shown in Figure 82.

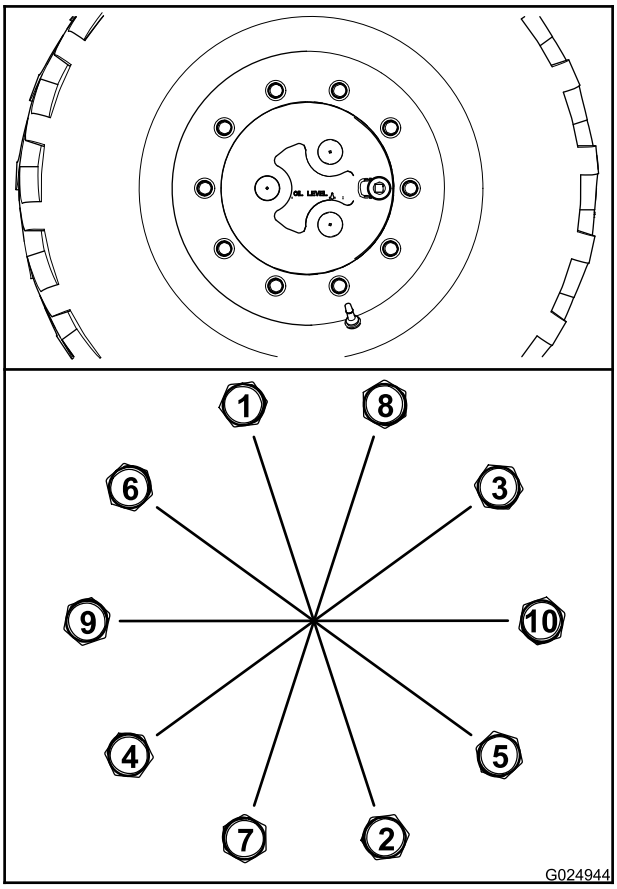

Figure 82

B. Torque all the nuts to 200 N-m (150 ft-lb) in the sequence shown in Figure 82.

C. Torque all the nuts to 300 N-m (225 ft-lb) in the sequence shown in Figure 82.

Servicing the Axles

Hub-and-axle oil specification: Mobilfluid 424

Checking the Oil Level in the Wheel Hubs

Service Interval: After the first 100 hours

Every 250 hours

Note: Have another person help you align the oil plugs in the axles when you service the axle oil.

1. Ensure that the machine is on a level surface and that all the attachments are in the transport position.
2. Move the machine forward or backward until the plug for the wheel hub is at either the 3 o'clock or 9 o'clock position (Figure 83).

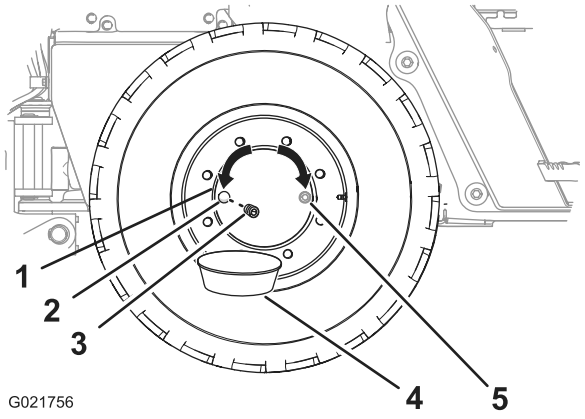

Figure 83

1. Wheel hub
2. Oil port at the 9 o'clock position
3. Plug
4. Drain pan
5. Oil port at the 3 o'clock position (alternative)

3. Stop the engine, set the parking brake, and remove the ignition key.
4. Place a drain pan under the drain port in the wheel hub (Figure 83).
5. Remove the plug from the wheel hub (Figure 83).
6. Check that the oil level is at the bottom of the threads of the oil port (Figure 83).
   - If the oil level is too high, allow the oil to drain from the oil port.
   - If the oil level is too low, add the specified oil to the wheel hub through the oil port; refer to step 6 in Changing the Oil in the Wheel Hubs (page 57).
7. Check the condition of the O-ring on the plug.

   Note: Replace the O-ring if it is worn or damaged.
8. Install the plug in the oil port of the wheel hub (Figure 83).
9. Repeat steps 2 through 8 for the other wheel hubs.

Changing the Oil in the Wheel Hubs

Service Interval: After the first 200 hours

Every 1,000 hours

Wheel hub oil capacity: approximately 1.5 L (1.6 US qt)

Toro Premium Gear Oil is available from an Authorized Toro Service Dealer. See the parts catalog for part numbers.

Note: If possible, change the oil when it is warm.

1. Move the machine forward or backward until the oil plug for the wheel hub is at the 6 o'clock position (Figure 84).

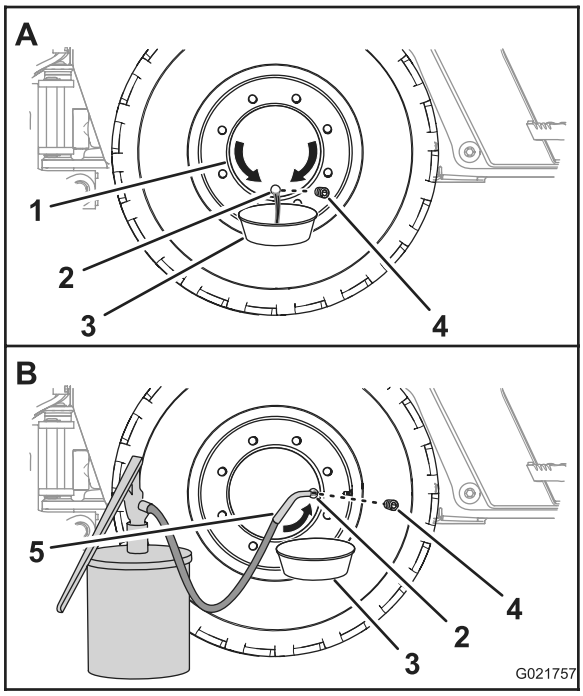

Figure 84

1. Wheel hub
2. Oil port at the 6 o'clock position
3. Drain pan
4. Oil port at the 3 o'clock position
5. Plug
6. Oil-servicing equipment

2. Place a drain pan under the oil port of the wheel hub (Figure 84).
3. Remove the plug and drain the oil from the planetary (Figure 84).
4. Check the condition of the O-ring for the plug.

   Note: Replace the O-ring if it is worn or damaged.
5. Move the machine forward or backward until the oil plug for the wheel hub is either at the 3 o'clock or the 9 o'clock position (Figure 84).
6. Add the specified oil to the wheel hub through the oil port until the oil level is at the bottom of the threads of the port.
7. Install the plug in the oil port of the wheel hub.
8. Repeat this procedure for the other wheel hubs.

Checking the Oil Level in the Axles

Service Interval: After the first 100 hours

Every 250 hours

1. Place a drain pan under the pinion housing of the axle.
2. Remove the plugs from the sight port in the pinion housing of the axle (Figure 85 and Figure 86).

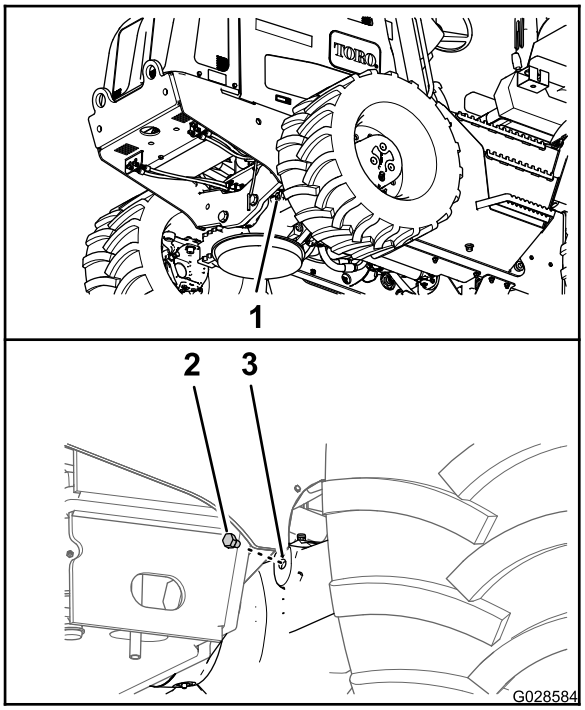

Figure 85
Front Axle

1. Front-axle housing
2. Plug
3. Sight port

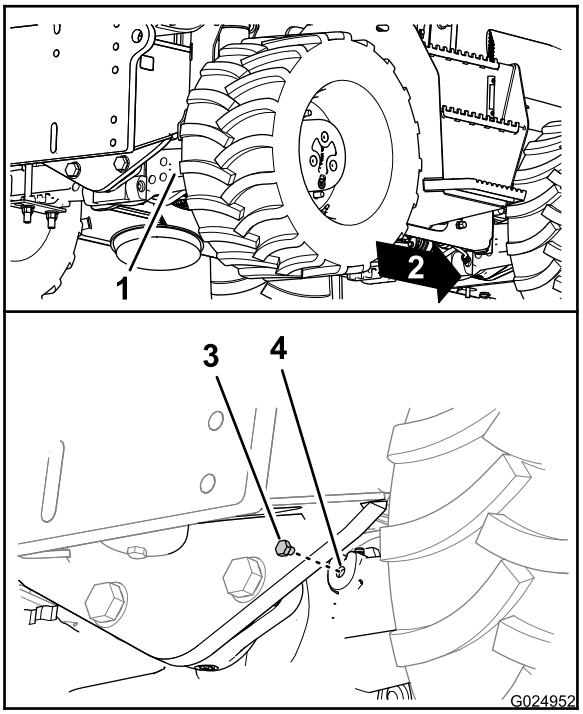

Figure 86
Rear Axle

1. Rear-axle housing
2. Forward
3. Plug
4. Site port

3. Look through the sight port and check that the oil level in the axle is level with the bottom of the threads of the port (Figure 85 and Figure 86).

   Note: Use a flashlight and a mirror to help you see the oil level.

   - If the oil level is too high, allow the oil to drain from the sight port.
   - If the oil level is too low, add the specified oil to the axle housing sight port; refer to steps 6 and 7 in Changing the Oil in the Axles (page 58).

4. Clean the threads of the sight plug.
5. Apply PTFE thread sealing tape to the threads of the plug.
6. Install the sight plug into the sight port in the pinion housing of the axle (Figure 85 and Figure 86).

Changing the Oil in the Axles

Service Interval: After the first 200 hours

Every 1,000 hours

Front axle oil capacity: approximately 9 L (9.5 US qt)

Rear axle oil capacity: approximately 9 L (9.5 US qt)

Toro Premium Gear Oil is available from an Authorized Toro Service Dealer. See the parts catalog for part numbers.

1. Place a drain pan under the pinion housing of the axle (Figure 87 and Figure 88).

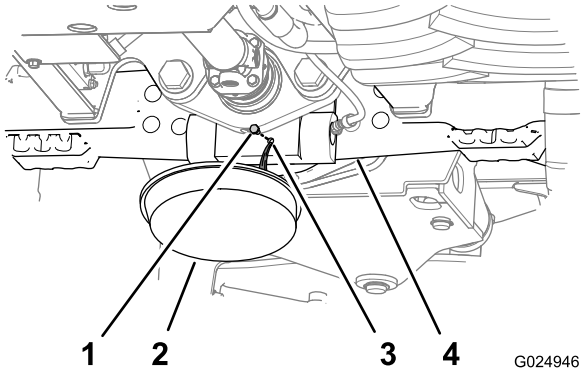

Figure 87
Front Axle

1. Drain plug
2. Drain pan
3. Drain port
4. Front-axle housing

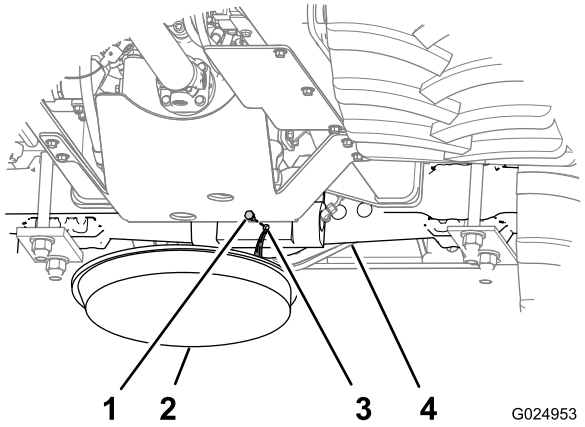

Figure 88
Rear Axle

1. Drain plug
2. Drain pan
3. Drain port
4. Rear-axle housing

2. Remove the plugs from the sight port and the drain port of the pinion housings for the axles (Figure 87 and Figure 88).

   Note: Allow the oil to drain completely from the pinion housing and axle.

3. Clean the threads of the plugs.
4. Apply PTFE thread sealing tape to the threads of the plugs.
5. Install the drain plugs into the drain ports at the pinion housings (Figure 89 and Figure 90).

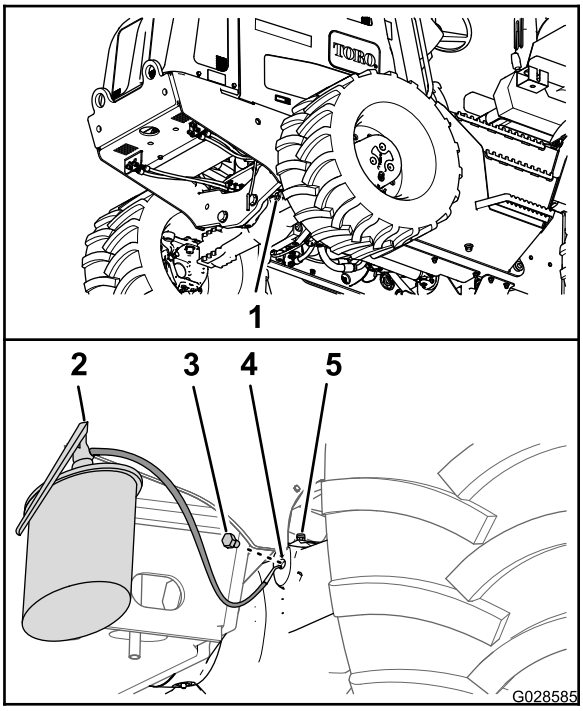

Figure 89
Front Axle

1. Front-axle housing
2. Oil-servicing equipment
3. Fill plug
4. Pinion housing
5. Sight port

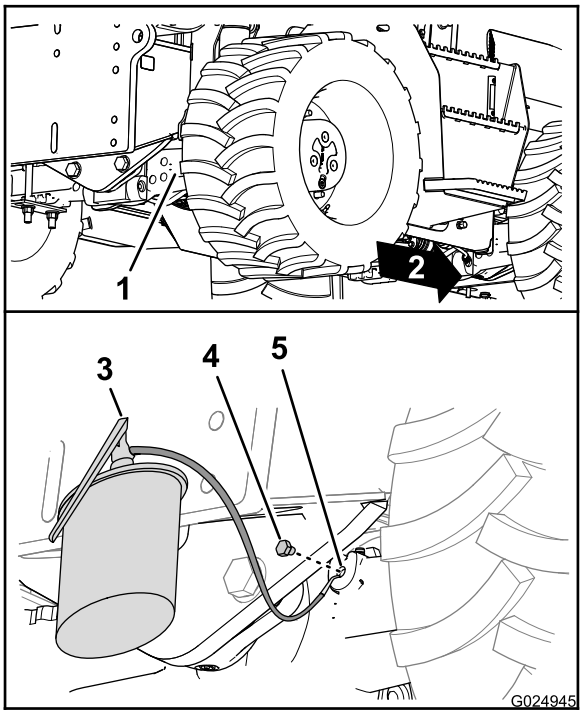

Figure 90
Rear Axle

1. Rear-axle housing
2. Forward
3. Oil-servicing equipment
4. Fill plug
5. Sight port

6. Fill the axles with the specified oil through the sight port until the oil is level with the threads at the bottom of the port (Figure 89 and Figure 90).
7. Wait a few minutes for the oil to settle, then add more oil as necessary.

   Note: Continue to add oil until the oil level stabilizes and is at the bottom of the threads of the sight port.
8. Install the fill plugs into the sight ports of the pinion housings for the axles (Figure 89 and Figure 90).

Cleaning the Axle Breathers

Service Interval: Every 1,000 hours

1. Clean the area around the breathers with a cleaning solvent (Figure 91 and Figure 92).

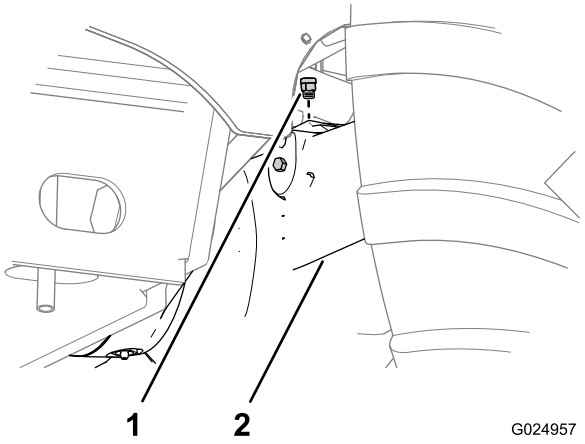

Figure 91

1. Breather fitting
2. Front axle

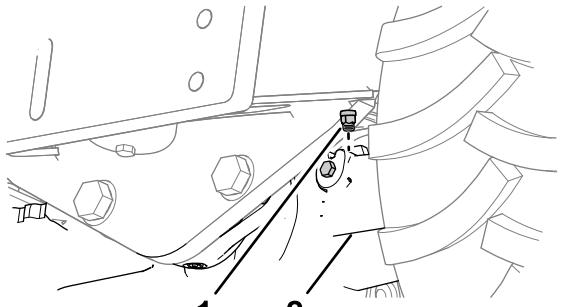

Figure 92

1. Breather fitting
2. Rear axle

2. Remove the breathers from the front axle and rear axles (Figure 91 and Figure 92).
3. Clean the breathers with a cleaning solvent.
4. Use compressed air to dry the breathers.

   Important: Wear face protection when using compressed air.

5. Install the breathers into the front and rear axles(Figure 91 and Figure 92).

Servicing the Transmission

Transmission-oil specification: Mobilfluid 424

Checking the Oil Level in the Transmission

Service Interval: Every 100 hours

Important: If you operate the machine while the level of the transmission oil is below the recommended level, you may damage the transmission and the parking brake.

1. Park the machine on a level surface.
2. Start the engine and run it for 10 minutes.
3. Stop the engine and remove the ignition key.
4. After 5 minutes, check the transmission oil level in the sight gauge (Figure 93).

   Note: The oil level should cover 1/2 to 3/4 of the sight-gauge window.

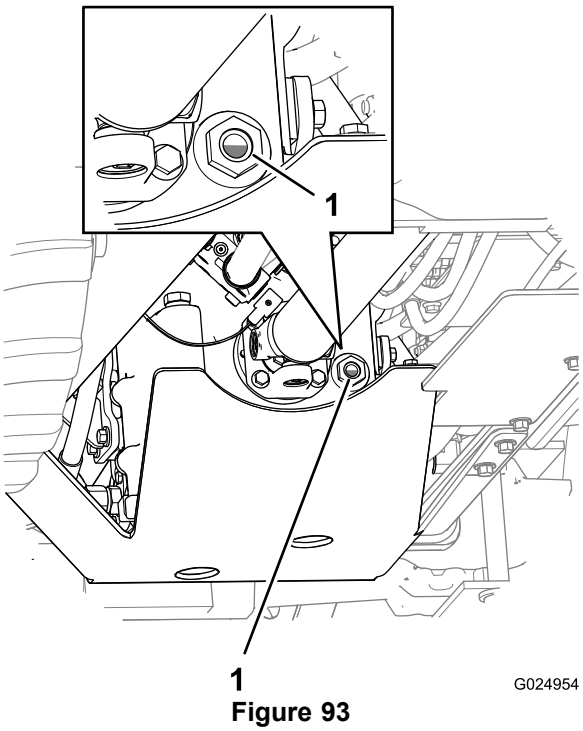

Figure 93

1. Sight gauge

5. If the oil level is low, add the specified oil into the transmission; refer to Filling the Transmission with Oil (page 61).
6. Repeat steps 2 through 5 until the oil level covers 1/2 to 3/4 of the sight-gauge window (Figure 93).

   Note: As you add oil to the transmission, perform steps 2 through 4 to determine the corrected oil level.

Changing the Transmission Oil

Service Interval: Every 1,000 hours

Draining the Transmission Oil

Note: If possible, drain the oil when it is warm.

1. Park the machine on a level surface, stop the engine, and remove the key.
2. Place a drain pan under the forward hole in the transmission shield (Figure 94).

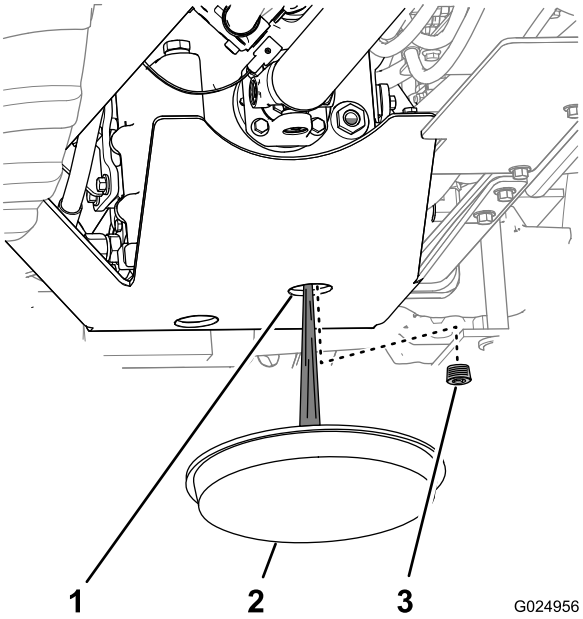

Figure 94

1. Transmission shield
2. Drain pan
3. Drain plug

3. Through the transmission shield, clean the area around the transmission drain plug (Figure 94).
4. Remove the drain plug and allow the transmission to drain completely.
5. Clean the threads of the plug.
6. Apply PTFE thread sealing tape to the threads of the plug.
7. Through the transmission shield, securely install the drain plug into the drain port of the transmission.

Filling the Transmission with Oil

Transmission oil capacity: approximately 10 L (10.6 US qt)—with filter change

Important: If you operate the machine while the level of the transmission oil is below the recommended level, you may damage the transmission and the parking brake.

1. Remove the fill plug from the fill port of the transmission.
2. Clean the threads of the plug.
3. Apply PTFE thread sealing tape to the threads of the plug.
4. Fill the transmission with the specified oil through the fill port (Figure 95).

Important: When you fill the transmission with oil, slowly add the oil into the transmission to avoid entraining air with the oil.

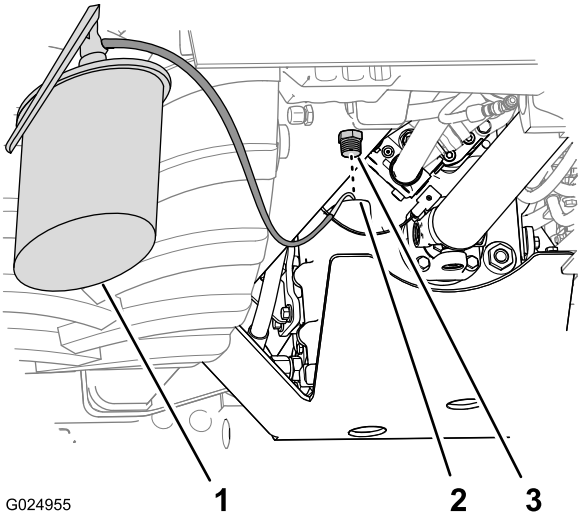

Figure 95

1. Oil-servicing equipment
2. Fill port
3. Fill plug

5. Install the fill plug into the fill port securely
6. Start the engine and run it for 10 minutes.
7. Stop the engine and remove the key.
8. After 5 minutes, check the oil level in the sight gauge.

Note: The oil level should cover 1/2 to 3/4 of the sight-gauge window (Figure 93).

Note: As you add oil to the transmission, perform steps 6 through 8 to determine corrected oil level.

Changing the Transmission Filter

Service Interval: Every 500 hours

Note: You can access the transmission filter from underneath the right side of the machine, inboard of the hydraulic tank.

1. Place a drain pan under the transmission-oil filter (Figure 96).

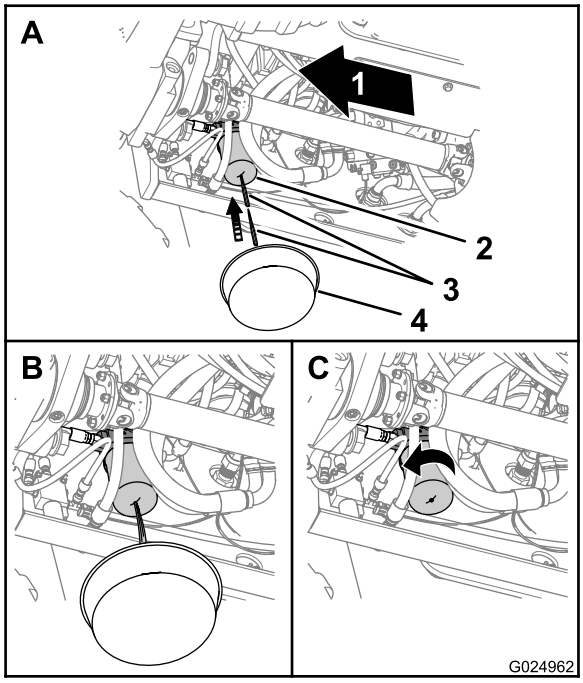

Figure 96

1. Forward
2. Transmission-oil filter
3. Sharp object
4. Drain pan

2. Puncture the bottom of the transmission filter, and allow the residual hydraulic fluid to drain into the drain pan (Figure 96).

   Note: Use a tapered-center punch or awl to puncture the filter case

3. Remove the transmission filter with a filter wrench and discard the filter (Figure 96).
4. Wipe clean the oil filter adapter at the seating surface for the filter.
5. Apply a thin layer of clean grease or oil onto the O-ring of the new filter.
6. Install the new filter by hand and tight the filter 1/2 to 3/4 turn after it makes contact with the filter head (Figure 96).

   Important: Do not use a filter strap wrench to tighten the filter. A strap wrench can dent the filter, causing it to leak.

7. Start the engine and run it at idle for 1 minute, and check for leaks.
8. Stop the engine and remove the key.
9. Check the transmission oil level; if the level is low, add the specified oil to the transmission; refer to Filling the Transmission with Oil (page 61).

   Important: When you fill the transmission with oil, slowly add the oil into the transmission to avoid entraining air with the oil.

Cooling System Maintenance

Servicing the Cooling System

Coolant specification: a mixture of 50% ethylene glycol and 50% water

Note: An antifreeze having a mixture of 50% ethylene glycol and 50% water will protect the engine to -37°C (-34°F) throughout the year.

Engine and radiator coolant capacity: 18.5 L (19.5 US qt)

Important: Using over-concentrated or high-silicate antifreeze can damage the engine.

⚠ WARNING

If you remove the recovery-tank cap from a hot engine, hot coolant could spray, causing scalding.

- **Wear face protection when opening the radiator cap.**
- **Allow the cooling system to cool down to below 50°C (120°F) before removing the recovery-tank cap.**
- **Follow the instructions for checking and maintaining the engine cooling system.**

⚠ WARNING

Coolant is toxic.

- **Keep coolant away from children and pets.**
- **If you are not re-using the coolant, dispose of it according to local environmental regulations.**

Checking the Coolant Level

Service Interval: Every 50 hours

⚠ WARNING

If the engine has been running, the radiator will be pressurized and the coolant inside will be hot. If you remove the cap, coolant may spray out, causing severe burns.

- **Do not remove the recovery-tank cap to check coolant levels.**
- **Do not remove the recovery-tank cap when the engine is hot. Allow the engine to cool for at least 15 minutes or until the radiator cap is cool enough to touch without burning your hand.**

1. Park the machine on a level surface, stop the engine, and remove the ignition key.
2. Allow the engine to cool.
3. Remove the left side panel; refer to Removing the Side Panels (page 44).
4. Check the coolant level by looking at the sight gauge in the side of the surge tank (Figure 97).

   Note: You should see that the coolant level is above the midpoint of the sight gauge.

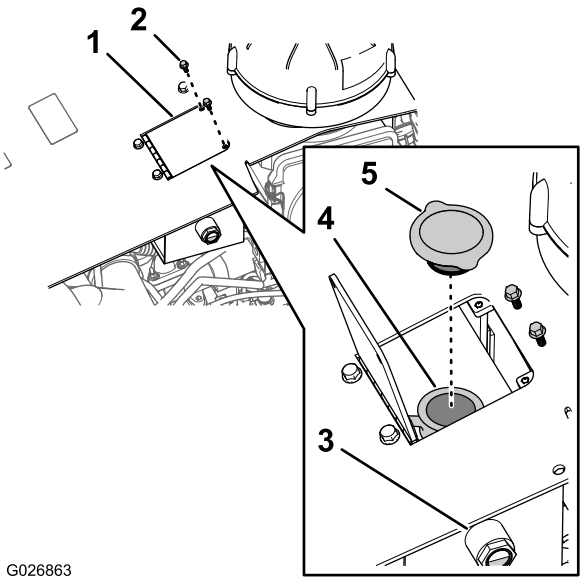

Figure 97

1. Reservoir door
2. Hex-head bolt
3. Coolant sight gauge
4. Filler neck
5. Recovery-tank cap

5. If the coolant level is low, preform the following:
   A. Remove the 2 hex-head bolts that secure the to the hood of the machine, and open the reservoir door (Figure 97).
   B. Remove the recovery-tank cap from the recovery tank, and add coolant until the level is up to the midpoint of the sight gauge (Figure 97).

      Important: Do not overfill the surge tank

      Note: If coolant level is low, check for leaks in the hoses, radiator, and the recovery tank.
   C. Install the recovery-tank cap, ensuring that it is tightly sealed.
   D. Close the reservoir door and secure it with the 2 hex-head bolts that you removed in step A.
6. If the air temperature is below 0°C (32°F), mix the ethylene glycol and water completely by running the engine at operating temperature for 5 minutes.
7. Install the left side panel; refer to Installing the Side Panels (page 45).

Checking the Condition of Cooling System Components

Service Interval: Every 300 hours

Check the condition of the cooling system for leaks, damage, dirt, and loose hoses, and clamps. Clean, repair, tighten, and replace the components as necessary.

Checking the Concentration of the Coolant

Service Interval: Every 1,000 hours

Test the concentration of ethylene glycol based antifreeze in the coolant . Ensure that the coolant is a mixture of 50% ethylene glycol and 50% water.

Cleaning the Cooling System

Service Interval: Every 2,000 hours/Every 2 years (whichever comes first)

The coolant capacity of the engine and the radiator: 18.5 L (19.5 US qt).

Draining the Coolant from the System

Important: Do not pour coolant onto the ground or into an unapproved container that can leak.

1. Remove the left and right side panels; refer to Removing the Side Panels (page 44).
2. Remove the 2 hex-head bolts that secure the reservoir door to the hood and open the door (Figure 97).
3. Remove the recovery-tank cap from the tank (Figure 97).
4. Slip a coolant resistant hose that is 3/8 x 30 inches over the outlet for the drain valve in the radiator (Figure 98).

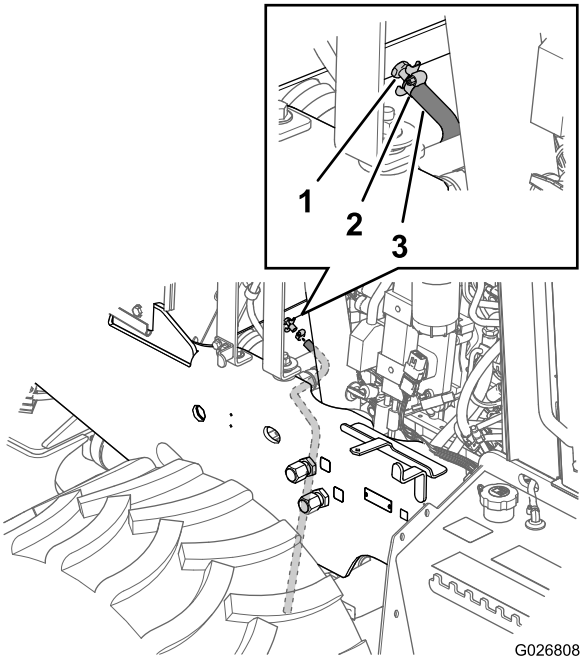

Figure 98

1. Drain valve
2. Hose clamp
3. Drain hose (coolant resistant)

5. Secure the hose to the drain valve with a hose clamp (Figure 98).
6. Route the hose down and through the hole in the lower mounting plate for the back fill blade (Figure 99).

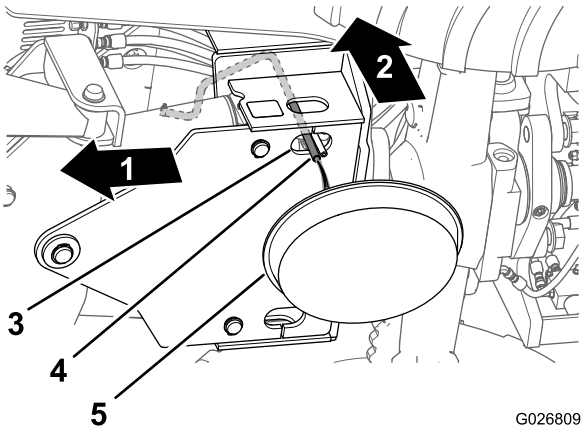

Figure 99

1. Front of the machine
2. Up
3. Hole (lower mounting plate)
4. Drain hose (coolant resistant)
5. Drain pan—minimum capacity of 23 L (6 gallons)

7. Place a drain pan with a minimum capacity of 23 L (6 gallons) under the open end of the drain hose (Figure 99).
8. Open the drain valve on the radiator, and allow the coolant to drain completely.

Note: Dispose of the used coolant properly according to local codes.

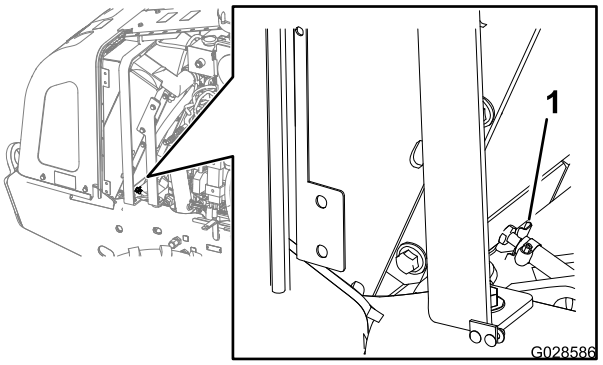

Figure 100

1. Drain valve

9. Close the drain valve (Figure 100).
10. Remove the drain hose and clamp (Figure 98 and Figure 99).

Flushing the Cooling System

Engine and radiator coolant capacity: 18.5 L (19.5 US qt)

1. Condition the cooling system as follows:
   A. Ensure that the coolant is drained from the radiator and that the drain valve is closed (Figure 100).
   B. Add a cooling system cleaning solution to the to the cooling system through the filler neck of the recovery tank (Figure 101).

      Note: Use cleaning solution of sodium carbonate and water (or a commercially available equivalent). Follow the directions that come with the cleaning solution.

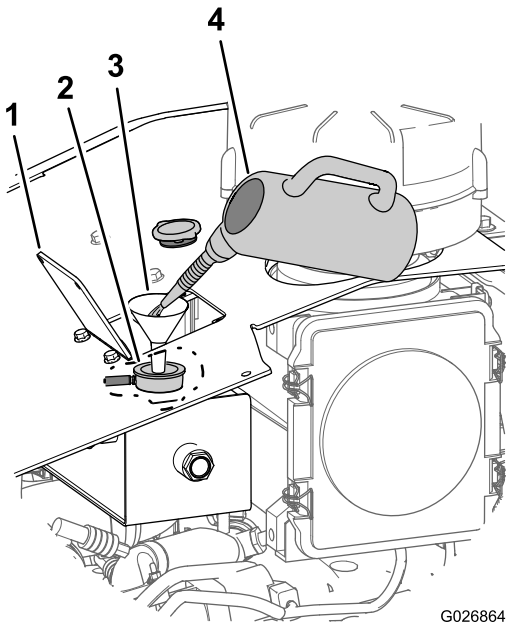

Figure 101

1. Reservoir door
2. Filler neck (recovery tank)
3. Funnel
4. Coolant system cleaning solution

   C. Operate the engine for 5 minutes or until the coolant temperature in the command-center display indicates 82°C (180°F), then stop the engine (Figure 102).

      Important: Do not install the recovery-tank cap.

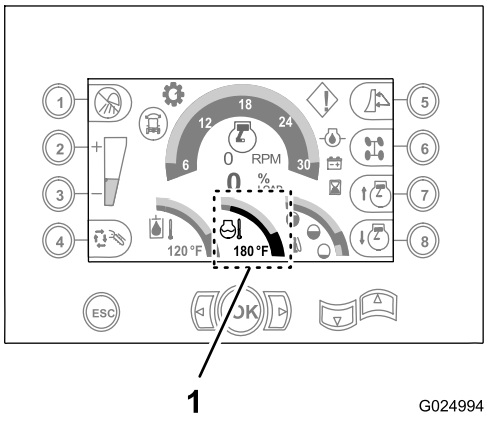

Figure 102

1. 180° F water temperature (command-center display)

⚠ CAUTION

The cleaning solution is hot and can cause burns.

Stay away from the discharge end of the coolant drain hose.

D. Open the drain valve and drain the cleaning solution into a drain pan (Figure 98 and Figure 100).

E. Close the drain valve (Figure 100).

2. Flush the cooling system as follows:

A. Fill the cooling system with clean water (Figure 103).

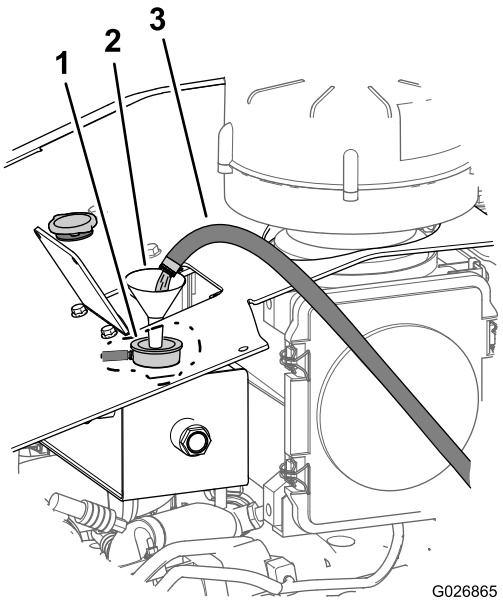

Figure 103

1. Filler neck (recovery tank)
2. Funnel
3. Clean water

B. Operate the engine for 5 minutes or until the coolant temperature in the command-center display indicates 82°C (180°F), then stop the engine.

⚠ CAUTION

The water is hot and can cause burns.

Stay away from the discharge end of the coolant drain hose.

C. Open the drain valve (Figure 100) and drain the water into a drain pan.

D. If the water drained from the radiator is dirty, perform steps 2-A through 2-C until the water drained from the radiator is clean.

E. Close the drain valve (Figure 100).

Filling the System with Coolant

The coolant capacity of the engine and the radiator: 18.5 L (19.5 US qt).

Important: Fill the cooling system properly to prevent air locks in the cooling passages. Failing to vent the cooling system properly can damage both the engine and the cooling system.

1. Remove the radiator cap from the recovery tank (Figure 97).
2. Fill the cooling system with the specified coolant mixture (Figure 104) until the fluid level is up to the midpoint in the sight gauge (Figure 97).

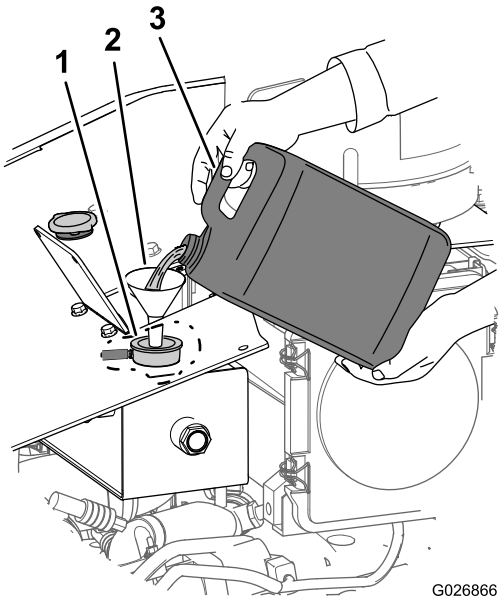

Figure 104

1. Coolant level (midpoint in the sight gauge)
2. Funnel
3. Coolant (a mixture of 50% ethylene glycol and 50% water)

3. Install the recovery-tank cap (Figure 97).
4. Start the engine and run it at half throttle for 5 minutes.
5. Stop the engine and remove the key.
6. Wait 30 minutes, then check the fluid level in the recovery tank. If it is low, add coolant.
7. Close the reservoir door and secure it to the hood with the 2 hex-head bolts (Figure 97) that you removed in step 2 of Draining the Coolant from the System (page 64).
8. Install the side panels; refer to Installing the Side Panels (page 45).

Belt Maintenance

Servicing the Engine Drive Belt

⚠ WARNING

Stop the engine and remove the key from the key switch before you begin to perform any maintenance or repair work.

⚠ WARNING

Contacting a rotating belt can cause serious injury or death.

Always stop the engine and remove the key from the key switch before working near belts.

Checking the Condition of the Belt

Service Interval: Every 250 hours

1. Remove the right-side panel; refer to Removing the Side Panels (page 44).
2. Inspect the belt for cuts, cracks, loose cords, grease, oil, twisting, or signs of abnormal wear.

   Note: Replace the belt if it is excessively worn or damaged; refer to Replacing the Engine Drive Belt (page 67).
3. Install the right-side panel; refer to Installing the Side Panels (page 45).

Replacing the Engine Drive Belt

Removing the Belt

1. Remove the right side panel; refer to Removing the Side Panels (page 44).
2. Loosen the tension on the belt by rotating the belt tensioner clockwise (Figure 105).

   Important: The belt tensioner is spring loaded and must pivot away from the drive belt. Pivoting the belt tensioner in the wrong direction could damage it. Also, do not use excessive force in the opposite direction of windup or after you have wound up the tensioner to the positive stop; otherwise, the tensioner arm may break.

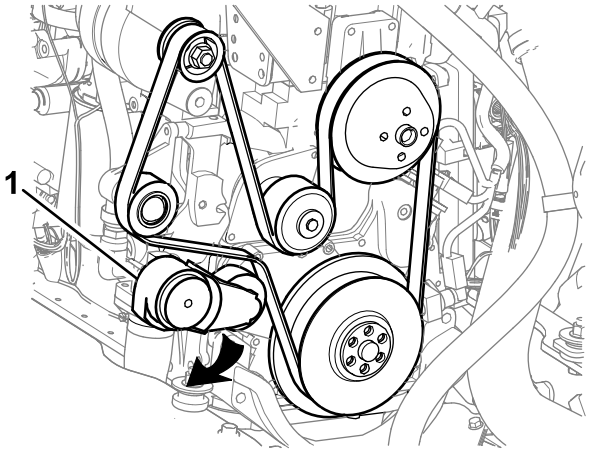

Figure 105

1. Belt tensioner

3. Remove the belt from the pulleys.

Cleaning and Inspecting the Belt and the Pulleys

1. Inspect the belt for excessive wear and damage. Replace the belt under any of the following conditions:
   - The belt is frayed, punctured, or some of its material is missing.
   - There is embedded debris in the grooves or on the backside of the belt.
   - The ribs are uneven or excessively worn.
   - The backside of the belt is glazed from high heat.
   - There are exposed belt cords.

   Note: You can reuse a belt with transverse cracks (across the belt) are acceptable, but replace a belt with longitudinal cracks (in the direction of the ribs) that intersect with transverse cracks.
2. Clean the idler and the drive pulleys, and inspect them for wear or cracks.

   Note: Replace any pulleys that are damaged, deformed, or excessively worn.

Installing the Belt

1. Route the belt onto the pulleys, but do not install the belt over the belt tensioner (Figure 105).
2. Rotate the belt tensioner clockwise and install the belt by slipping the belt over the belt tensioner.
3. Slowly release the belt tensioner to apply tension to the drive belt.
4. Ensure that the belt is aligned with the belt tensioner and in the grooves of the pulleys.

Hydraulic System Maintenance

Servicing the Hydraulic System

Hydraulic-fluid specification: Toro Premium All-season Hydraulic Fluid

If Toro Premium All-season Hydraulic Fluid is not available, you may use Mobil DTE 15M Special (Mobil DTE 15M fluid with special antiwear additive package).

Note: Toro Premium All-season Hydraulic Fluid is available in 5-gallon pails or 55-gallon drums. See the parts catalog or an Authorized Toro Service Dealer for part numbers.

The machine comes from the factory with a full hydraulic fluid reservoir that contains approximately 182 L (48 US gal) of high-quality hydraulic fluid. **Check the level of the hydraulic fluid before you start the engine for the first time, and daily thereafter.**

Note: Toro does not assume responsibility for damage caused by improper substitutions, so use only products from reputable manufacturers.

Note: Many brands of hydraulic fluids are almost colorless, making it difficult to spot leaks. A red dye additive for the hydraulic system oil is available in 20 ml (0.68 oz) bottles. One bottle is sufficient for 15.1 to 22.7 L (4.0 to 6.0 US gal) of hydraulic oil. Order part no. 44-2500 from an Authorized Toro Service Dealer.

Note: If ambient operating temperatures exceed 110°F, contact Toro for fluid recommendations.

Changing the Hydraulic Fluid and Replacing the Breather

Service Interval: Every 1,000 hours

The capacity of the hydraulic-fluid reservoir: 150 L (40 US gallons)

The capacity of the hydraulic-fluid system: 182 L (48 US gallons)

Draining the Hydraulic Reservoir

Note: Drain the hydraulic fluid reservoir when the fluid is warm, if possible.

1. Remove the right side panel; refer to Removing the Side Panels (page 44).
2. Rotate the battery disconnect to the Off position (Figure 106).

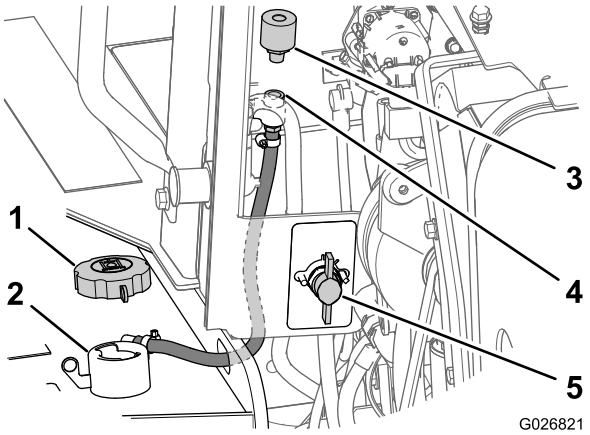

Figure 106

1. Fill cap (hydraulic tank)
2. Filler neck (hydraulic tank)
3. Breather
4. Pipe coupling
5. Battery disconnect switch (Off position)

3. Remove the fill cap from the filler neck of the tank (Figure 106).
4. At the forward side of the engine compartment panel, remove the breather from the pipe coupling by rotating the breather counterclockwise (Figure 106).

   Note: Discard the old breather.
5. Install a new breather into the pipe coupling hand tight (Figure 106).
6. Place a container that can hold a minimum of 190 L (50 US gal) under the hydraulic reservoir drain plug (Figure 107).

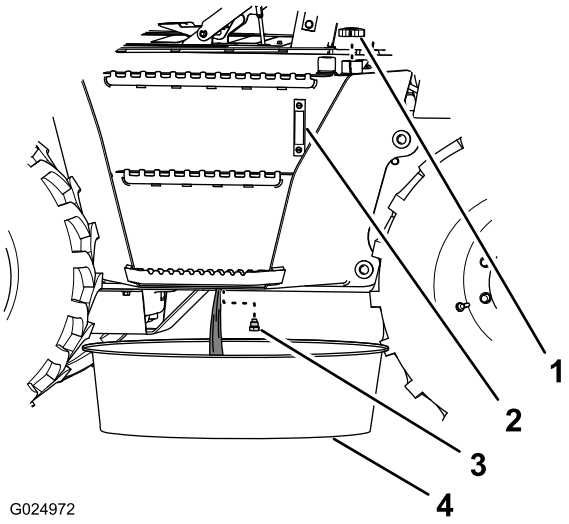

Figure 107

1. Fill cap
2. Sight gauge (hydraulic reservoir)
3. Plug
4. Drain pan

7. Remove the drain plug from the hydraulic reservoir (located underneath the reservoir), and drain the reservoir (Figure 107).
8. Examine the condition of the seal on the drain plug.

   Note: Replace the seal if it is worn or damaged.
9. Install the drain plug (Figure 107).

   Important: Change the hydraulic-pressure and hydraulic-return filters when you change the hydraulic fluid; refer to Changing the Hydraulic-charge Filter (page 70) and Changing the Hydraulic-return Filter (page 71).
10. Rotate the battery disconnect switch to the On position and install the right side panel; refer to Battery-Disconnect Switch (page 20) and Installing the Side Panels (page 45).

Filling the Hydraulic-fluid Reservoir

1. Fill the hydraulic-fluid reservoir with the specified hydraulic fluid until the fluid level is at the midpoint of the sight gauge (Figure 108).

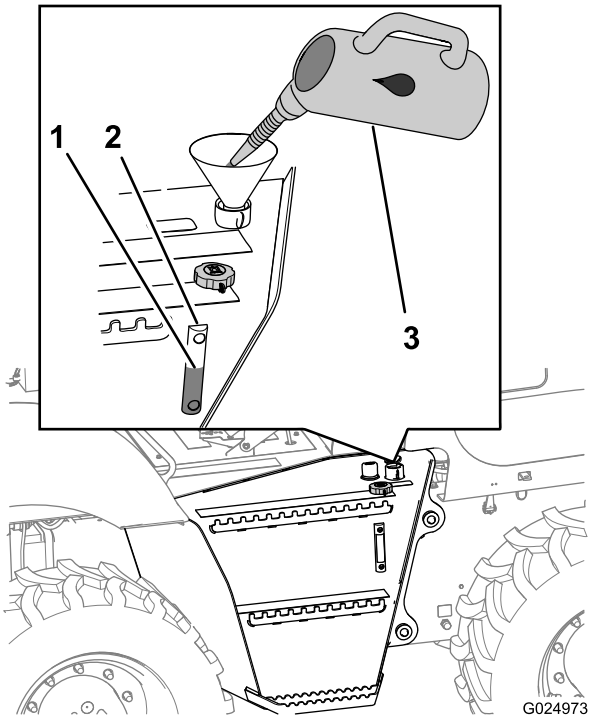

Figure 108

1. Fill level (midpoint)
2. Sight gauge
3. Hydraulic fluid

2. Clean the fill cap with solvent.
3. Install the fill cap (Figure 108).
4. Start the engine and let it idle for approximately 2 minutes.
5. Stop the engine and remove the key from the key switch.
6. Check around the pressure and return filters for leaks.
7. Check the drain plug for leaks.
8. Check the level of the hydraulic fluid.

Changing the Hydraulic Filters

Removing the Traction-pedal Assembly

Remove the traction-pedal assembly as follows:

1. Remove the 4 hex-flanged head bolts that secure that traction-pedal assembly to the chassis of the machine (Figure 109).

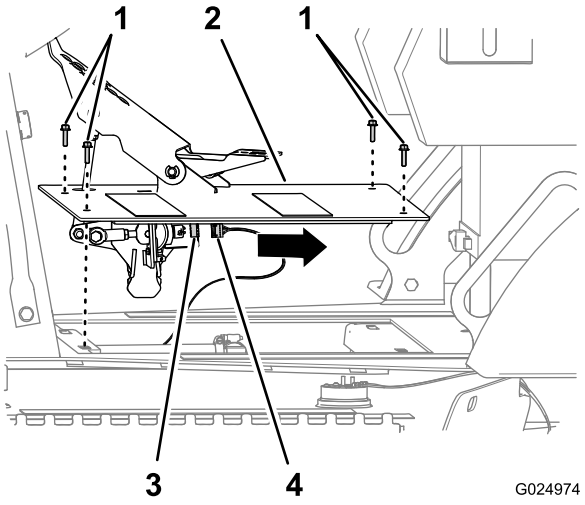

Figure 109

1. Hex-flanged head bolts
2. Traction-pedal assembly
3. 6-pin connector (traction-pedal sensor)
4. 6-socket connector (machine harness)

2. Disconnect the 6-socket connector of the machine harness from the 6-pin connector of the traction-pedal sensor (Figure 109).
3. Remove the traction-pedal assembly from the machine (Figure 109).

Changing the Hydraulic-charge Filter

Service Interval: Every 500 hours

Note: Change the hydraulic-return filter when you change the hydraulic-charge filter.

Note: You can access the hydraulic-charge filter from under the right side of the machine, behind the hydraulic reservoir (Figure 110).

1. Remove the traction-pedal assembly; refer to Removing the Traction-pedal Assembly (page 70).
2. Place a container under the hydraulic-charge filter (Figure 110).

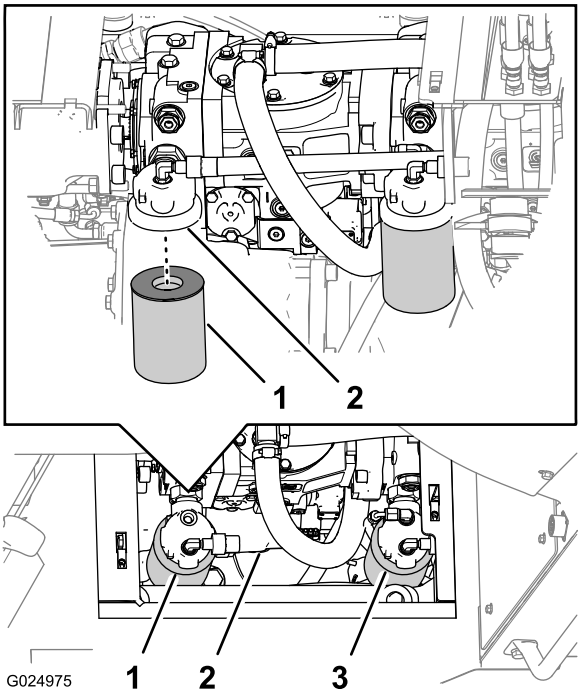

Figure 110

1. Container suitable for hydraulic fluid
2. Sharp object
3. Hydraulic-charge filter

3. Rotate the hydraulic-charge filter counterclockwise and remove the filter (Figure 110).

   Note: Discard the filter.

4. Apply a thin layer of the specified hydraulic fluid to the O-ring of the new filter.

   Important: Do not use a filter strap wrench to tighten the filter. A strap wrench can dent the filter, causing it to leak.

5. Fill the new charge filter with the specified hydraulic fluid, allow the filter element to saturate with the fluid, and then pour out the excess fluid.
6. Install the new filter.

   Note: Use your hands to tighten the filter an additional half turn after the filter makes contact with the filter head.

7. Repeat steps 3 through 6 for the other charge filter
8. Check the level of the hydraulic fluid in the hydraulic reservoir; refer to Checking the Hydraulic-Fluid Level (page 25).
9. Start the engine and let it idle for 1 or 2 minutes.
10. Shut off the engine, and check for leaks around the filter area.
11. Check the level of the hydraulic fluid in the hydraulic reservoir, and add fluid, if necessary; refer to Filling the Hydraulic-fluid Reservoir (page 69).

12. Install the traction-pedal assembly; refer to Removing the Traction-pedal Assembly (page 70).

Installing the Traction-pedal Assembly

1. Connect the 6-socket connector of the machine harness to the 6-pin connector of the traction-pedal sensor (Figure 109).
2. Align the holes in the plate of the traction-pedal assembly with the holes in the chassis of the machine (Figure 109).
3. Secure the traction-pedal assembly to the chassis of the machine with the 4 hex-flanged head bolts (6 x 25 mm); refer to Figure 109.

Changing the Hydraulic-return Filter

Service Interval: Every 500 hours

Note: Change the hydraulic-charge filter when you change the hydraulic-return filter.

Note: You can access the hydraulic-return filter from underneath the rear-attachment plate of the machine (Figure 111).

1. Place a container under the hydraulic-return filter (Figure 111).

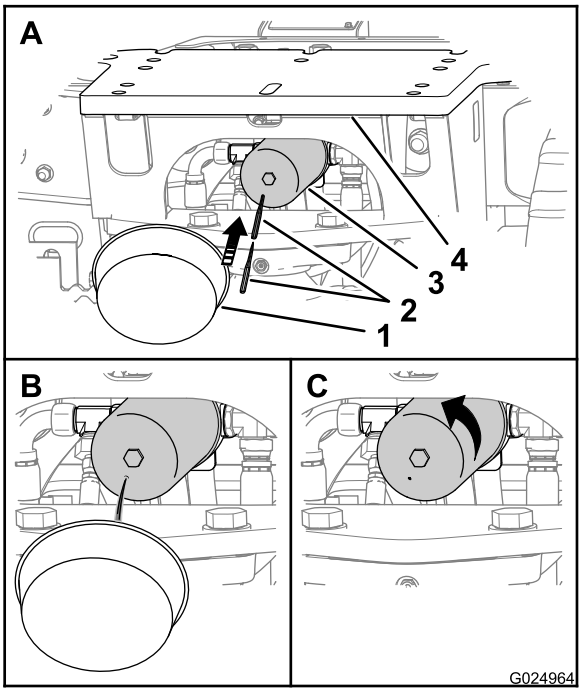

Figure 111

1. Container suitable for hydraulic fluid
2. Sharp object
3. Hydraulic return filter
4. Rear-attachment plate

2. Puncture the bottom of the hydraulic-return filter and allow the residual hydraulic fluid to drain in the container (Figure 111).

Note: Use a tapered-center punch or awl to puncture the filter case.

3. Rotate the hydraulic-return filter counterclockwise and remove the filter (Figure 111).

Note: Discard the filter properly.

4. Apply a thin layer of the specified hydraulic fluid to the O-ring of the new filter.

Important: Do not use a filter strap wrench to tighten the filter. A strap wrench can dent the filter, causing it to leak.

5. Install the new filter.

Note: Use your hands to tighten the filter an additional half turn after the filter makes contact with the filter head.

6. Check the level of the hydraulic fluid in the hydraulic reservoir; refer to Checking the Hydraulic-Fluid Level (page 25).
7. Start the engine and run it at idle for 1 or 2 minutes.
8. Stop the engine and remove the key.
9. Check around the filter for leaks.
10. Check the fluid level of the hydraulic reservoir, and add fluid, if necessary; refer to Filling the Hydraulic-fluid Reservoir (page 69).

ROPS Maintenance

Checking and Servicing the ROPS

A ROPS certification label located on the support structure contains information about the maximum gross machine weight, the machine model number, and the ISO number.

Replacing a Damaged ROPS System

If the ROPS system has been damaged in an accident, such as a rollover or hitting an overhead object during transport, replace any damaged ROPS components to restore the ROPS system to its original level of protection.

Important: Do not try to weld or straighten a damaged ROPS bar.

After an accident, check the following items for damage:

- The ROPS bar
- Operator seat
- Seat belt mounting
- Seat belt

Before you operate the machine, replace all damaged ROPS components; contact an Authorized Toro Service Dealer.

Checking and Caring for the Seat Belt

Before you operate the machine, always ensure that the ROPS and the seat belt are properly installed and in good working order.

1. Check the seat belt for damage, and replace all parts that are damaged.
2. Ensure that the mounting bolts for the seat belts are tight.
3. Keep the seat belts clean using only soap and water.

   Note: Do not immerse the seat belts in bleach or dye, because this weakens the belt material.

Checking and Maintaining the ROPS

Service Interval: Every 500 hours

Important: If any part of the ROPS system is damaged, replace it before you operate the machine.

1. Check that the bolts that secure the seat to the chassis of the machine are torqued to 27 to 34 N-m (20 to 25 in-lb); refer to Figure 112.

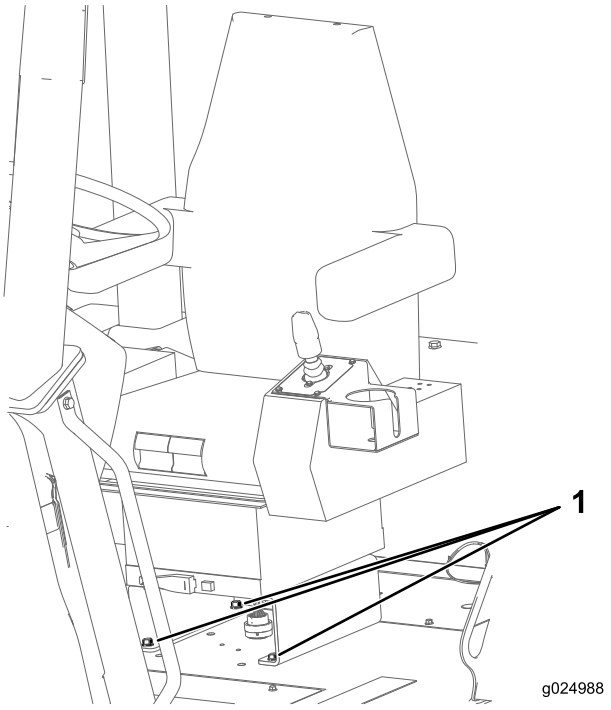

Figure 112

1. Bolts

2. Check that the bolts and nuts that attach the seat-belt retractor and buckle to the seat are torqued to 47 to 61 N-m (35 to 45 in-lb); refer to Figure 113.

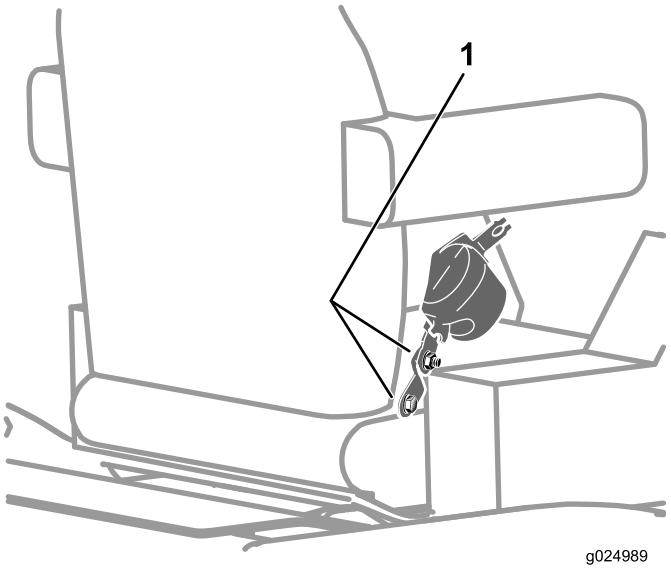

Figure 113

1. Bolts

   Note: Replace any parts that are worn or damaged.
3. Inspect the ROPS for cracks, rust, or holes in the ROPS and component parts.

   Note: Age, weather, and accidents cause damage to the ROPS and ROPS parts. If you have any doubts about the ROPS system, contact an Authorized Toro Service Dealer.

Welding on the Machine

Important: Before you use an electric welder to repair or modify the machine, perform all the following:

- Rotate the battery-disconnect switch to the Off position
- Disconnect the negative and positive battery cables.
- Disconnect the wiring at the alternator.
- Disconnect the 2 connectors for the computer module.
- Disconnect the connector for the command-center display.

After you complete welding on the machine, connect the command–center display, computer module, alternator, and battery cables and rotate the .battery-disconnect switch to the On position

Preparing to Disconnect the Components

1. Remove the right side panel; refer to Removing the Side Panels (page 44).
2. Rotate the battery-disconnect switch to the Off position; refer to Battery-Disconnect Switch (page 20).
3. Remove the 2 finger-pull covers from the holes in the battery cover (Figure 114).

   Note: The battery cover is located between the operator seat and the rear ROPS bulkhead.

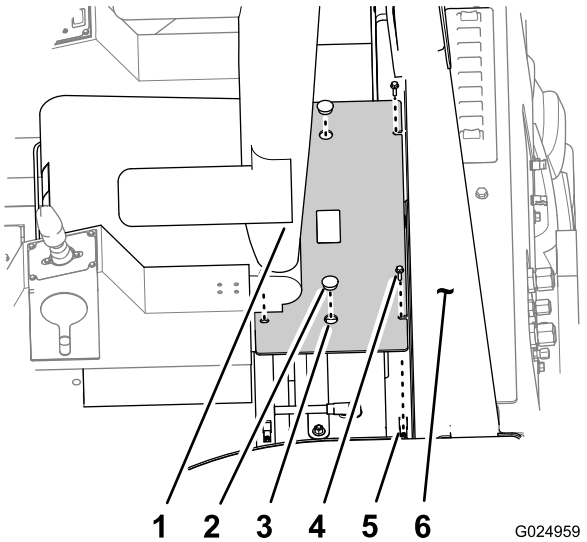

Figure 114

1. Operator seat	4. Flange-head bolts (5/16 x 1 inch)
2. Finger-pull cover	5. Nut clip
3. Hole (battery cover)	6. ROPS bulkhead

4. Remove the 4 flange-head bolts (5/16 x 1 inch) that secure the battery cover to the ROPS platform (Figure 114).
5. Using the finger pulls, lift the battery cover up to remove it from the ROPS platform (Figure 114).
6. Remove the lock-washer nut (3/8 inch) securing the negative-battery cable and ring terminal to the negative stud of the battery and remove the cables from the battery (Figure 115).

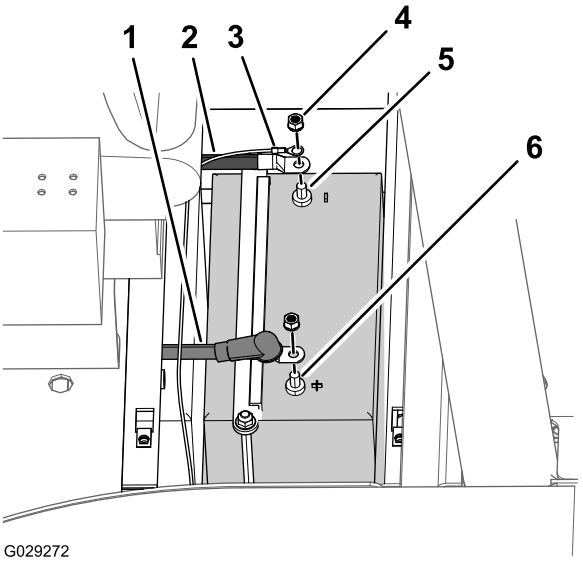

Figure 115

1. Positive-battery cable	4. Lock-washer nut (3/8 inch)
2. Negative-battery cable	5. Negative stud (battery)
3. Ring terminal	6. Positive stud (battery)

7. Move back the insulator boot and remove the lock-washer nut (3/8 inch) securing the positive-battery cable to the positive stud of the battery and remove the cable from the battery (Figure 115).

Disconnecting the Alternator Wiring

1. At the alternator, slide the boot off the terminal and stud at the back of the alternator (Figure 116).

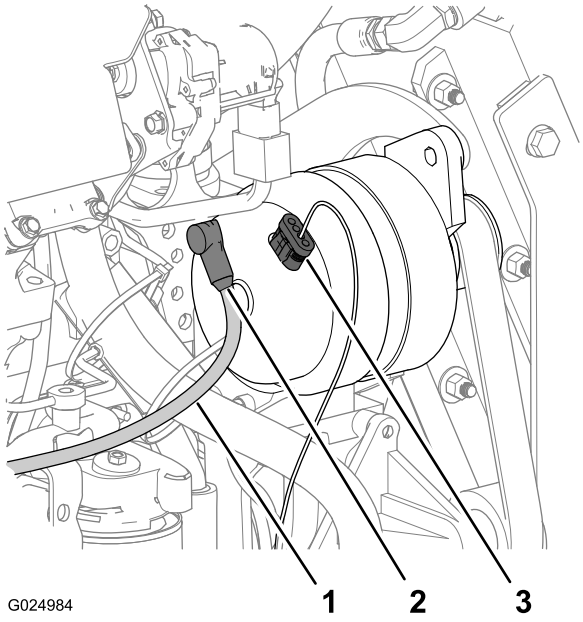

Figure 116

1. Charge wire
2. Boot
3. 4-socket connector (voltage-sense wire)

2. Remove the nut and washer that secures the terminal of the charge wire to the stud of the alternator, and remove the terminal.
3. Remove the 4-socket connector for the voltage-sense wire from the 4-pin connector on top of the alternator (Figure 116).

Disconnecting the Computer-module Connectors

1. Remove the 4 hex-flanged head bolts (6 x 20 mm) that secure the lower-console panel to the console, and remove the panel (Figure 117).

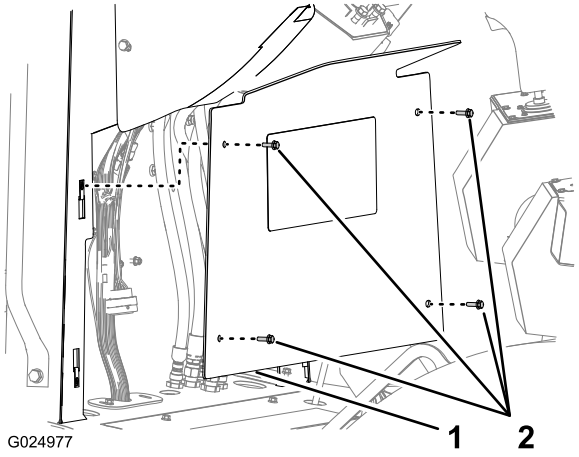

Figure 117

1. Lower-console panel
2. Hex-flanged head bolts (6 x 20 mm)

2. Disconnect the 50-socket connector (CPU 1) from the back of the computer module (Figure 118).

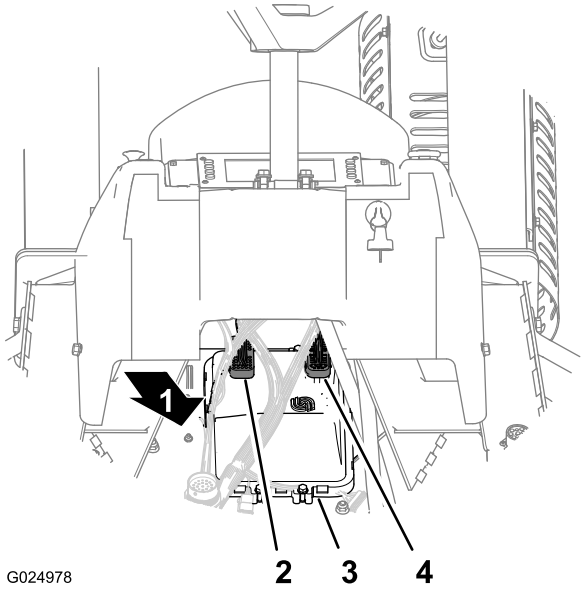

Figure 118

1. Forward
2. 50-socket connector (CPU 1)
3. Computer module
4. 38-socket connector (CPU-2)

3. Disconnect the 38-socket connector (CPU-2) from the back of the computer module (Figure 118).

Connecting the Computer-module Connectors

1. Connect the 38-socket connector (CPU-2) to the back of the computer module (Figure 118).
2. Connect the 50-socket connector (CPU 1) to the back of the computer module (Figure 118).

3. Align the lower-console panel to the console (Figure 117).
4. Secure the panel to the console with the 4 hex-flanged head bolts (6 x 20 mm).

Connecting the Alternator Wiring

1. Ensure that the battery-disconnect switch is in the Off position; refer to Battery-Disconnect Switch (page 20).
2. Connect the 4-socket connector for the voltage-sense wire to the 4-pin connector on top of the alternator (Figure 116).
3. Assemble the terminal of the charge wire onto the stud at the back of the alternator (Figure 116).
4. Secure the charge wire to the stud with the nut and washer.
5. Align the boot of the charge wire over the terminal and stud (Figure 116).

Closing the Machine

1. Assemble the positive-battery cable into the positive stud of the battery (Figure 115) with the lock-washer nut (3/8 inch) that you removed in step 7 of Preparing to Disconnect the Components (page 73).
2. Torque the lock-washer nut to (10 to 15 ft-lb) and align the insulator boot over the nut and stud.
3. Assemble the negative-battery cable into the negative stud of the battery (Figure 115) with the lock-washer nut (3/8 inch) that you removed in step 6 of Preparing to Disconnect the Components (page 73).
4. Align the holes in the battery cover with the clip nuts at the mounting flange for the cover (Figure 114).
5. Secure the battery cover to the machine with the 4 flange-head bolts (5/16 x 1 inch) that you removed in step 4 of Preparing to Disconnect the Components (page 73).
6. Install the finger-pull cover into the holes in the battery cover.
7. Rotate the battery-disconnect switch to the On position; refer to Battery-Disconnect Switch (page 20).
8. Install the right side panel; refer to Installing the Side Panels (page 45).

Cleaning

Removing Dirt and Debris from the Machine

Important: Operating the engine with blocked screens, dirty or plugged cooling fins, and/or cooling shrouds removed, will result in engine damage from overheating.

1. Lower all attachments and set the parking brake.
2. Stop the engine, remove the key, and wait for all moving parts to stop before leaving the operating position.
3. Wipe away dirt and debris from the air cleaner.
4. Clean any dirt and debris buildup on the engine with a brush or blower.

   Important: It is preferable to blow dirt out, rather than washing it out. If water is used, keep it away from electrical items and hydraulic valves. Do not use a high-pressure washer. High-pressure washing can damage the electrical system and hydraulic valves or deplete grease.

Storage

Preparing for Seasonal Storage

For storage over 30 days, prepare the machine, the attachments, and the engine as follows:

Preparing the Machine and Attachments

1. Thoroughly clean the machine and all the attachments; refer to Removing Dirt and Debris from the Machine (page 75).
2. Lower all the attachments and set the parking brake.
3. Stop the engine, remove the key, and wait for all moving parts to stop before leaving the operating position.
4. Check the tire pressure and adjust it, if necessary; refer to Maintaining the Air Pressure in the Tires (page 55).
5. Check all fasteners and tighten them as necessary.
6. Grease all fittings and pivot points and wipe up any excess grease; refer to Greasing the Machine (page 42).
7. Repair any dents in the machine or the attachments, and lightly sand and paint areas that are bare, scratched, chipped, or rusted. Paint is available from an Authorized Toro Service Dealer.
8. Service the battery and the cables as follows:
   A. Remove the battery terminals from the battery posts.
   B. Clean the battery, terminals, and posts with a wire brush and baking soda solution.
   C. Coat the cable terminals and battery posts with Grafo 112X skin-over grease (Toro Part No. 505-47) or equivalent grease.
   D. Slowly recharge the battery every 60 days for 24 hours to prevent lead sulfation of the battery.
9. Check and tighten all bolts, nuts, and screws. Repair or replace any part that is damaged.
10. Store the machine in a clean, dry garage or storage area. Remove the key from the ignition switch and keep it in a memorable place.
11. Cover the machine to protect it and keep it clean.

Preparing the Engine

1. Remove dirt, grime, and chaff from the external parts of the engine.
2. Change the engine oil and the oil filter; refer to Changing the Engine Oil and Filter (page 45).
3. Start the engine and run it at idle speed for approximately 2 minutes.
4. Stop the engine.
5. Flush the fuel tank with fresh, clean diesel fuel.
6. Secure all the fuel system fittings.
7. Service the air cleaner; refer to Servicing the Air-cleaner System (page 47).
8. Seal the air cleaner inlet and the exhaust outlet with plastic and weatherproof tape.
9. Check the anti freeze protection and add a 50% ethylene glycol and 50% water solution of anti-freeze as needed for the expected minimum temperature in your area.

Troubleshooting

Problem	Possible Cause	Corrective Action
The starter does not crank.	1. The electrical connections are corroded or loose.	1. Check the electrical connections for good contact.
	2. A fuse is blown.	2. Replace the fuse.
	3. A fuse is loose.	3. Install the fuse.
	4. The battery is discharged.	4. Charge the battery or replace it.
	5. The relay or switch is damaged.	5. Contact your Authorized Service Dealer.
	6. The starter or starter solenoid is damaged.	6. Contact your Authorized Service Dealer.
	7. Internal engine components have seized up.	7. Contact your Authorized Service Dealer.
1. The engine cranks but will not start.	1. The starting procedure is incorrect.	1. Refer to Starting the Engine in Operation.
	2. The fuel tank is empty.	2. Fill the fuel tank with fresh fuel.
	3. The fuel shutoff valve is closed.	3. Open the fuel shutoff valve.
	4. There is dirt, water, stale fuel, or incorrect fuel in the fuel system.	4. Drain and flush the fuel system; add fresh fuel.
	5. The fuel line is clogged.	5. Clean or replace the fuel line.
	6. There is air in the fuel.	6. Bleed the nozzles and check for air leaks at the fuel hose connections and fittings between the fuel tank and engine.
	7. The glow plugs do not operate.	7. Check the fuse, glow plugs, and wiring.
	8. The cranking speed is slow.	8. Check the battery, oil viscosity, and starting motor (contact your Authorized Service Dealer).
	9. The air cleaning system elements are dirty.	9. Service the air cleaning system elements.
	10. The fuel filter is clogged.	10. Replace the fuel filter.
	11. The fuel is not the proper grade for cold-weather use.	11. Drain the fuel system, replace the fuel filter, and add fresh fuel having the proper grade for ambient temperature conditions. You may need to warm up the entire machine.
	12. The engine has low compression.	12. Contact your Authorized Service Dealer.
	13. The injection nozzles or pump are malfunctioning.	13. Contact your Authorized Service Dealer.
The engine starts but does not keep running.	1. The fuel tank vent is restricted.	1. Loosen the cap. If the engine runs with the cap loosened, replace the cap.
	2. There is dirt or water in the fuel system.	2. Drain and flush the fuel system; add fresh fuel.
	3. The fuel filter is clogged.	3. Replace the fuel filter.
	4. There is air in the fuel.	4. Bleed the nozzles and check for air leaks at fuel hose connections and fittings between the fuel tank and the engine.
	5. The fuel is not the proper grade for cold-weather use.	5. Drain the fuel system, replace the fuel filter, and add fresh fuel having the proper grade for ambient temperature conditions. You may need to warm up the entire machine.
	6. The fuel pump is damaged.	6. Contact your Authorized Service Dealer.

Problem	Possible Cause	Corrective Action
The engine runs but knocks or misses.	1. There is dirt or water in the fuel system.	1. Drain and flush the fuel system; add fresh fuel.
	2. The engine overheats.	2. Check the engine oil level and add oil as needed; also check and service the coolant system, if necessary.
	3. There is air in the fuel.	3. Bleed the nozzle and check for air leaks at the fuel hose connections and the fittings between the fuel tank and the engine.
	4. The injection nozzles are damaged.	4. Contact your Authorized Service Dealer.
	5. The engine has low compression.	5. Contact your Authorized Service Dealer.
	6. There is excessive carbon buildup.	6. Contact your Authorized Service Dealer.
	7. The engine has internal wear or damage.	7. Contact your Authorized Service Dealer.
The engine is overheated.	1. The coolant level is too low.	1. Check the coolant level and add coolant to the system.
	2. The air flow to the radiator is restricted.	2. Inspect and clean the radiator screen.
	3. The engine oil level is either too low or too high.	3. Either add or drain the engine oil until the oil level is at the Full mark.
	4. The machine is under an excessive load.	4. Reduce the load on the machine; operate the machine at a slower ground speed.
	5. There is improper fuel in the fuel system.	5. Drain and flush the fuel system, then add fresh fuel.
	6. The thermostat is damaged.	6. Contact your Authorized Service Dealer.
	7. The injection timing is incorrect.	7. Contact your Authorized Service Dealer.
	8. The coolant pump is damaged.	8. Contact your Authorized Service Dealer.
There is excessive black smoke in the exhaust.	1. The air cleaning system elements are dirty.	1. Service the air cleaning system elements.
	2. There is improper fuel in the fuel system.	2. Drain and flush the fuel system, then add fresh fuel.
	3. The injection pump timing is incorrect.	3. Contact your Authorized Service Dealer.
	4. The injection pump is damaged.	4. Contact your Authorized Service Dealer.
	5. The injection nozzles are damaged.	5. Contact your Authorized Service Dealer.
	6. The turbo charger is damaged.	6. Contact your Authorized Service Dealer.
There is excessive white smoke in the exhaust.	1. The key was turned to the Start position before the glow plug light turned off.	1. Turn the key to the Run position and allow the glow plug light to turn off before starting the engine.
	2. The engine temperature is low.	2. Check the thermostat and replace it if necessary.
	3. The glow plugs are not operating.	3. Check the fuse, glow plugs, and wiring.
	4. The injection nozzles are damaged.	4. Contact your Authorized Service Dealer.
	5. The engine has low compression.	5. Contact your Authorized Service Dealer.
	6. There is an internal coolant leak in the engine.	6. Contact your Authorized Service Dealer.

Problem	Possible Cause	Corrective Action
The engine loses power.	1. The engine is under an excessive load.	1. Reduce the ground speed of the machine.
	2. The engine oil level is either too low or too high.	2. Either add or drain the engine oil until the oil level is at the Full mark.
	3. The air cleaning system elements are dirty.	3. Service the air cleaning system elements.
	4. There is dirt or water in the fuel system.	4. Drain and flush the fuel system; add fresh fuel.
	5. The engine overheats.	5. Check the engine oil level and add oil as needed; also check and service the coolant system, if necessary.
	6. There is air in the fuel.	6. Bleed the nozzle and check for air leaks at the fuel hose connections and the fittings between the fuel tank and the engine.
	7. The engine has low compression.	7. Contact your Authorized Service Dealer.
	8. The fuel tank vent is restricted.	8. Loosen the cap. If the engine runs with the cap loosened, replace the cap.
	9. The injection pump is damaged.	9. Contact your Authorized Service Dealer.
The machine does not drive.	1. The parking brake is engaged.	1. Release the parking brake.
	2. The hydraulic fluid level is low.	2. Add hydraulic fluid to the reservoir.
	3. The pump and/or motor is damaged.	3. Contact your Authorized Service Dealer.
	4. The relief valve is damaged.	4. Contact your Authorized Service Dealer.

The Toro Underground Warranty

A Limited Warranty

Underground Equipment

Conditions and Products Covered

The Toro Company and its affiliate, Toro Warranty Company, pursuant to an agreement between them, jointly warrant your Toro Underground Equipment ("Product") to be free from defects in materials or workmanship. Where a warrantable condition exists, we will repair the Product at no cost to you including diagnostics, labor, and parts.
The following warranty applies from the date the Product is delivered to the original retail purchaser or rental owner.

Products	Warranty Period
Engine Powered Units & Fluid Mixers	1 year or 1000 operating hours, whichever occurs first
All Serialized Attachments	1 year
Rock Hammer	6 months
Engines	Through engine manufacturers: 2 years or 2000 operating hours, whichever occurs first

Instructions for Obtaining Warranty Service

You are responsible for notifying the Underground Dealer from whom you purchased the Product as soon as you believe a warrantable condition exists. If you need help locating a Underground Dealer, or if you have questions regarding your warranty rights or responsibilities, you may contact us at:

Toro Customer Care
Toro Warranty Company
8111 Lyndale Avenue South
Bloomington, MN 55420-1196
Toll Free at 855-493-0088 (U.S. Customers)
1-952-948-4318 (International Customers)

Owner Responsibilities

As the Product owner, you are responsible for required maintenance and adjustments stated in your *Operator's Manual*. Failure to perform required maintenance and adjustments can be grounds for disallowing a warranty claim.

Items and Conditions Not Covered

Not all product failures or malfunctions that occur during the warranty period are defects in materials or workmanship. This warranty does not cover the following:

- Product failures which result from the use of non-Toro replacement parts, or from installation and use of add-on, or modified non-Toro branded accessories and products. A separate warranty may be provided by the manufacturer of these items.
- Product failures which result from failure to perform recommended maintenance and/or adjustments. Failure to properly maintain your Toro product per the Recommended Maintenance listed in the *Operator's Manual* can result in claims for warranty being denied.
- Product failures which result from operating the Product in an abusive, negligent, or reckless manner.
- Parts subject to consumption through use unless found to be defective. Examples of parts which are consumed, or used up, during normal Product operation include, but are not limited to: brakes, filters, lights, bulbs, belts, tracks or tires, digging teeth, digging booms, digging, drive, or track chains, track pads, drive sprockets, idlers, rollers, blades, cutting edges, or other ground engaging components.
- Failures caused by outside influence. Conditions considered to be outside influence include, but are not limited to, weather, storage practices, contamination, use of unapproved fuels, coolants, lubricants, additives, water, or chemicals, etc.
- Failure or performance issues due to the use of fuels (e.g. gasoline, diesel, or biodiesel) that do not conform to their respective industry standards.
- Normal noise, vibration, wear and tear, and deterioration.
- Normal "wear and tear" includes, but is not limited to, damage to seats due to wear or abrasion, worn painted surfaces, scratched decals, etc.
- Hauling expenses, travel time, mileage, or overtime associated with transporting product to the authorized Toro dealer.

Parts

Parts scheduled for replacement as required maintenance in the *Operator's Manual,* are warranted for the period of time up to the scheduled replacement time for that part. Parts replaced under this warranty are covered for the duration of the original product warranty and become the property of Toro. Toro will make the final decision whether to repair any existing part or assembly or replace it. Toro may use remanufactured parts for warranty repairs.

Maintenance is at Owner's Expense

Engine tune-up, lubrication, cleaning and polishing, replacement of filters, coolant, and completing recommended maintenance are some of the normal services Toro products require that are at the owner's expense.

General Conditions

Repair by an Authorized Toro Underground Dealer is your sole remedy under this warranty.

Neither The Toro Company nor Toro Warranty Company is liable for indirect, incidental or consequential damages in connection with the use of the Toro Products covered by this warranty, including any cost or expense of providing substitute equipment or service during reasonable periods of malfunction or non-use pending completion of repairs under this warranty. Except for the Emissions warranty referenced below, if applicable, there is no other express warranty. All implied warranties of merchantability and fitness for use are limited to the duration of this express warranty.

Some states do not allow exclusions of incidental or consequential damages, or limitations on how long an implied warranty lasts, so the above exclusions and limitations may not apply to you. This warranty gives you specific legal rights, and you may also have other rights which vary from state to state.

Note regarding engine warranty:

The Emissions Control System on your Product may be covered by a separate warranty meeting requirements established by the U.S. Environmental Protection Agency (EPA) and/or the California Air Resources Board (CARB). The hour limitations set forth above do not apply to the Emissions Control System Warranty. Refer to the Engine Emission Control Warranty Statement supplied with your product or contained in the engine manufacturer's documentation for details.

Countries Other than the United States or Canada

Customers who have purchased Toro products exported from the United States or Canada should contact their Toro Distributor (Dealer) to obtain guarantee policies for your country, province, or state. If for any reason you are dissatisfied with your Underground Dealer's service or have difficulty obtaining guarantee information, contact the Toro importer.

Australian Consumer Law: Australian customers will find details relating to the Australian Consumer Law either inside the box or at your local Toro Dealer.