Form No. 3379-641 Rev C

Count on it.

Parts Catalog

TimeCutter® SS 4216 Riding Mower

Model No. 74616—Serial No. 313000001 and Up

Register at www.Toro.com.
Original Instructions (EN)

3379-641 C

Ordering Replacement Parts

To order replacement parts, please supply the part number, the quantity, and the description of each part desired.

Understanding Reference Numbers

Each identified part in an illustration has a reference number. The reference number for a part also appears in the parts list, along with other information about the part.

This catalog uses two special reference number formats, one to indicate parts in a service assembly and another to indicate the quantity of a given part in an illustration.

Service Assembly Reference Numbers

Parts in service assemblies have reference numbers in the form a:b. The a represents the reference number of the entire service assembly and the b represents a sequential number unique to each part within the service assembly.

For example, a wheel assembly might be identified by reference number 6, the tire by 6:1, the valve by 6:2, and the wheel by 6:3. When you order the assembly identified by reference number 6, you receive all parts identified by reference numbers 6:1,6:2, and 6:3. However, you may also order any part individually. Reference numbers of this type appear in illustration and in parts lists.

Reference Numbers Indicating Quantity

In an illustration, if a reference number indicates more than one part, the reference number has the form nX y. The n represents the quantity of the part, the X is the multiplication symbol, and the y represents the reference number.

For example, in an illustration, the reference number 2X 37 means that two of the parts identified by reference number 37 are indicated.

List of Abbreviations

AR: as required

ASM: assembly

BBC: blade brake control

BHTF: button head thread forming

CARR: carriage

CCW: counter clockwise

CW: clockwise

DEG: degrees

DPA: Dual Point Adjustment

ECM: electronic control module

EXT: external

FH: flat head

GA: gauge

HD: heavy-duty

HF: hex flange

HH: hex head

HHF: hex head flange

HHFTF: hex head flange thread forming

HJ: hex jam

HLH: hex lag head

HOC: height-of-cut

HP: high pressure

HSBH: hex socket button head

HSFH: hex socket flat head

HSH: hex socket head

HWH: hex washer head

HWHTF: hex washer head thread forming

HYD: hydraulic

LH: left hand

LP: low pressure

LPG: Liquefied Petroleum Gas

NI: nylon insert

NPTF: national pipe thread fine

PFH: phillips flat head

PPH: phillips pan head

PPHTF: phillips pan head thread forming

PRH: phillips round head

PTH: phillips truss head

PTO: power-take-off

RH: right hand

ROPS: roll-over protection system

RRB: rear roller brush

SFH: slotted fillister head

SHH: slotted hex head

SHWH: slotted hex washer head

SPH: slotted pan head

SQH: square head

SRH: slotted round head

STD: standard

TAP: self tapping

TTH: torx truss head

Contents

Frame, Front Axle and Caster Wheel Assembly 4
Wheel and Tire Assembly No. 120-5515 6
Motion Control Assembly 8
Belt and Idler Assembly 10
Hydro Transaxle Drive and Rear Wheel Assembly 11
Right Hand Hydro Transaxle Assembly No. 119-3331 12
Left Hand Hydro Transaxle Assembly No. 119-3330 14
Clutch Assembly 16
Engine and Muffler Assembly 17
Engine Assembly No. 1 18
Engine Assembly No. 2 20
Engine Assembly No. 3 22
Body Styling and Fuel Pod Assembly 24
Fuel Delivery Assembly 25
Electrical Assembly 26
Seat Assembly 27
Deck Lift Assembly 28
42 Inch Deck Assembly 29
42 Inch Deck Assembly No. 119-8840 30
42 Inch Deck, Belt and Blade Assembly 31
Attachments and Accessories 32

© 2015—The Toro® Company
8111 Lyndale Avenue South
Bloomington, MN 55420

Contact us at www.Toro.com.
Printed in the USA.
All Rights Reserved

Frame, Front Axle and Caster Wheel Assembly

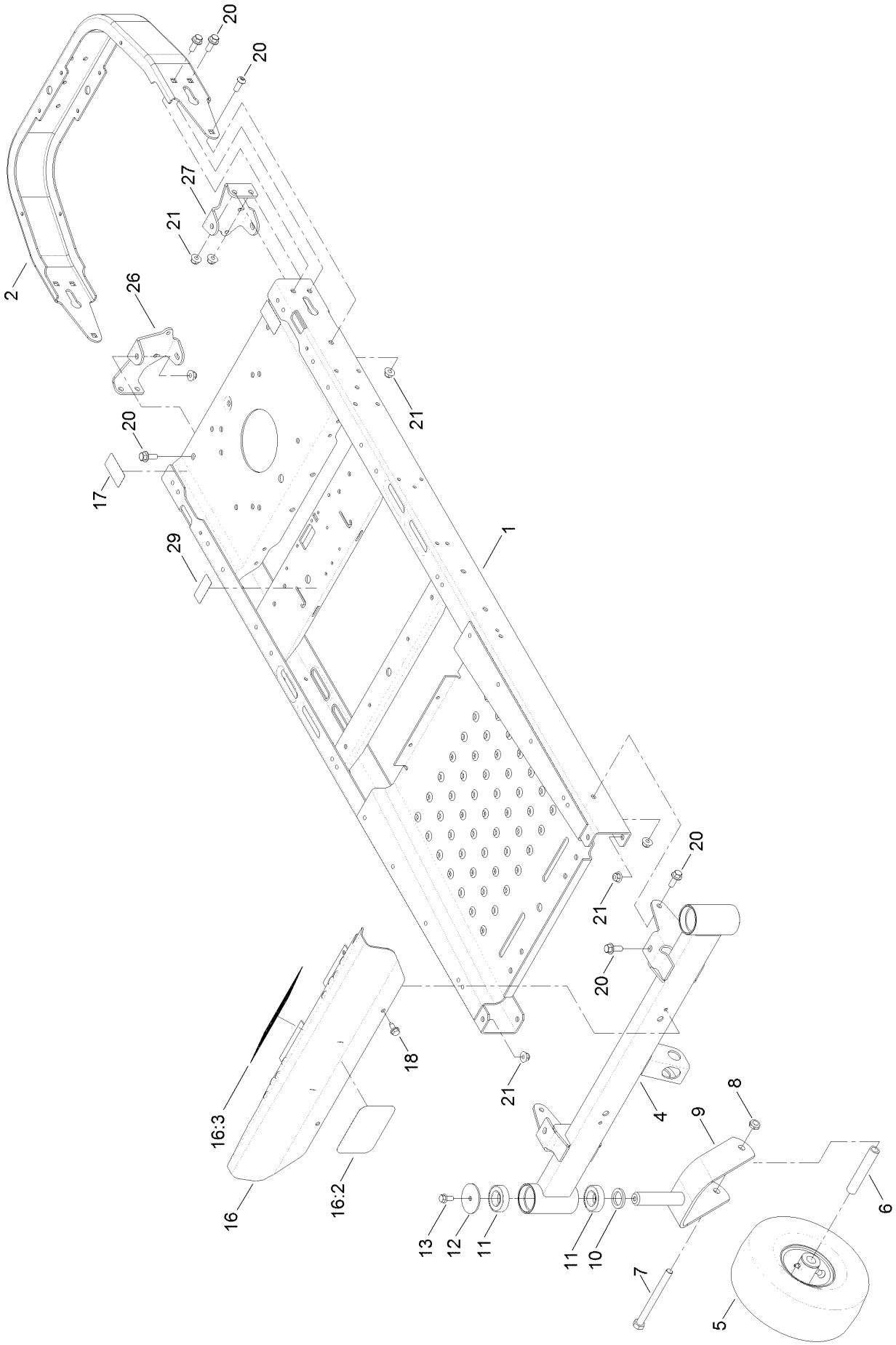

Frame, Front Axle and Caster Wheel Assembly (continued)

Ref.	Part Number	Qty.	Description
1	121-2970-01	1	Frame
2	110-1920-01	1	Bumper-Rear
4	120-5516-01	1	Axle-Front
5	120-5515	2	Caster Wheel ASM (Cst)
6	104-3667	2	Spanner-Wheel
7	325-22	2	Screw-HH
8	3296-45	2	Nut-Lock, NI
9	120-7964-01	2	Caster Fork ASM
10	117-7394	2	Washer-Thrust
11	109-3678	4	Bearing-Ball
12	119-8915	2	Washer
13	3234-47	2	Screw-HHF
16	125-0072	1	Footrest ASM
16:2	105-8278	1	Decal
16:3	120-2239	1	Decal-Danger
17	121-2989	2	Decal-Bypass
18	32144-70	2	Screw-HWHTF
20	3234-42	14	Screw-HHF
21	104-8301	14	Nut-Flange, NI
26	121-0737-01	1	Mount-Hydro, Rear (RH)
27	121-0738-01	1	Mount-Hydro, Rear (LH)
29	121-5684	1	Decal

Wheel and Tire Assembly No. 120-5515

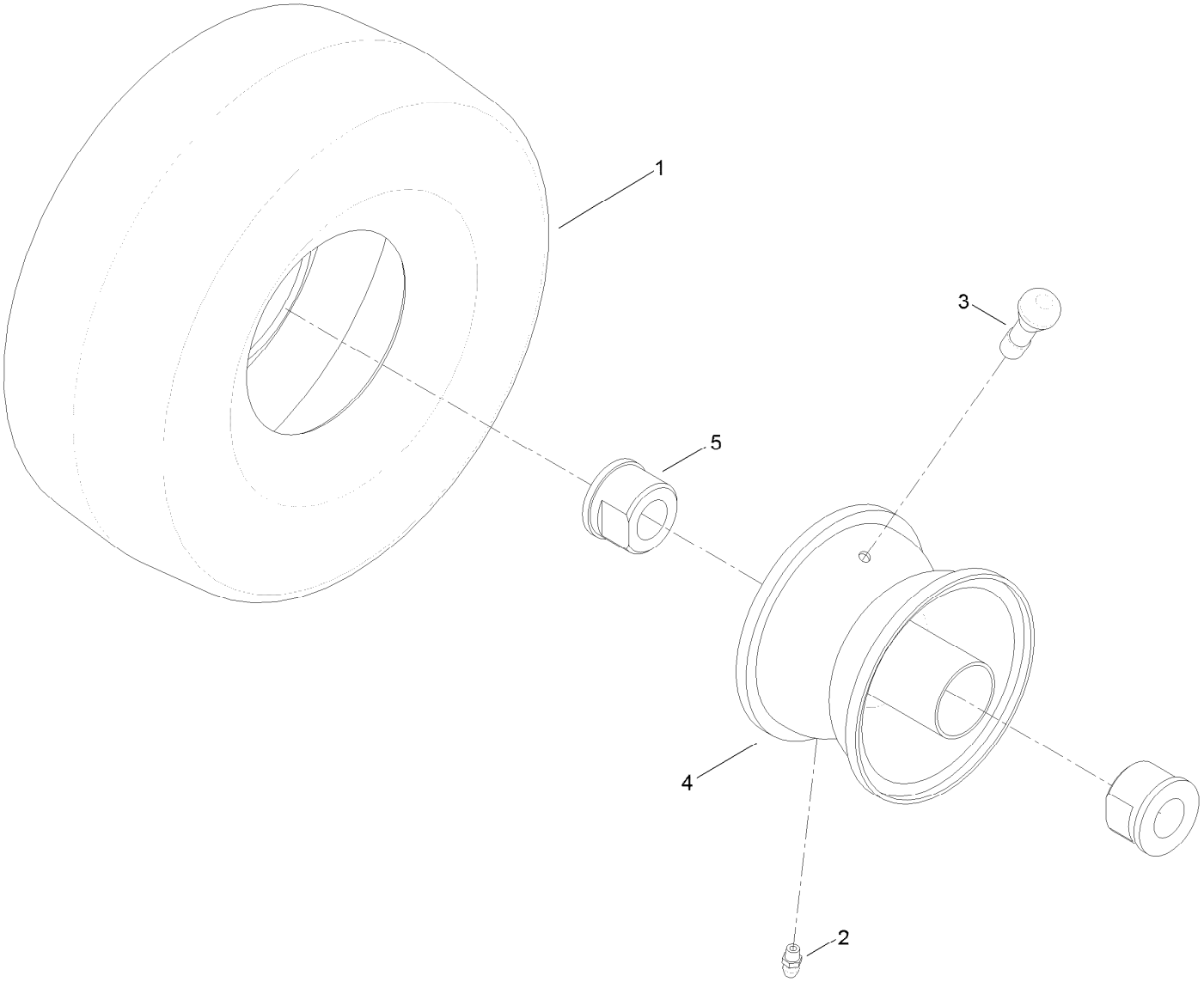

Wheel and Tire Assembly No. 120-5515 (continued)

Ref.	Part Number	Qty.	Description
1	120-5514	1	Tire-Smooth (Cst)
2	302-5	1	Fitting-Grease
3	232-27	1	Stem-Valve
4	114-1641	1	Rim
5	114-1640	2	Bushing-Flange
99	93-4244	1	Tube-Inner (W/Valve) ●

● Not illustrated

Motion Control Assembly

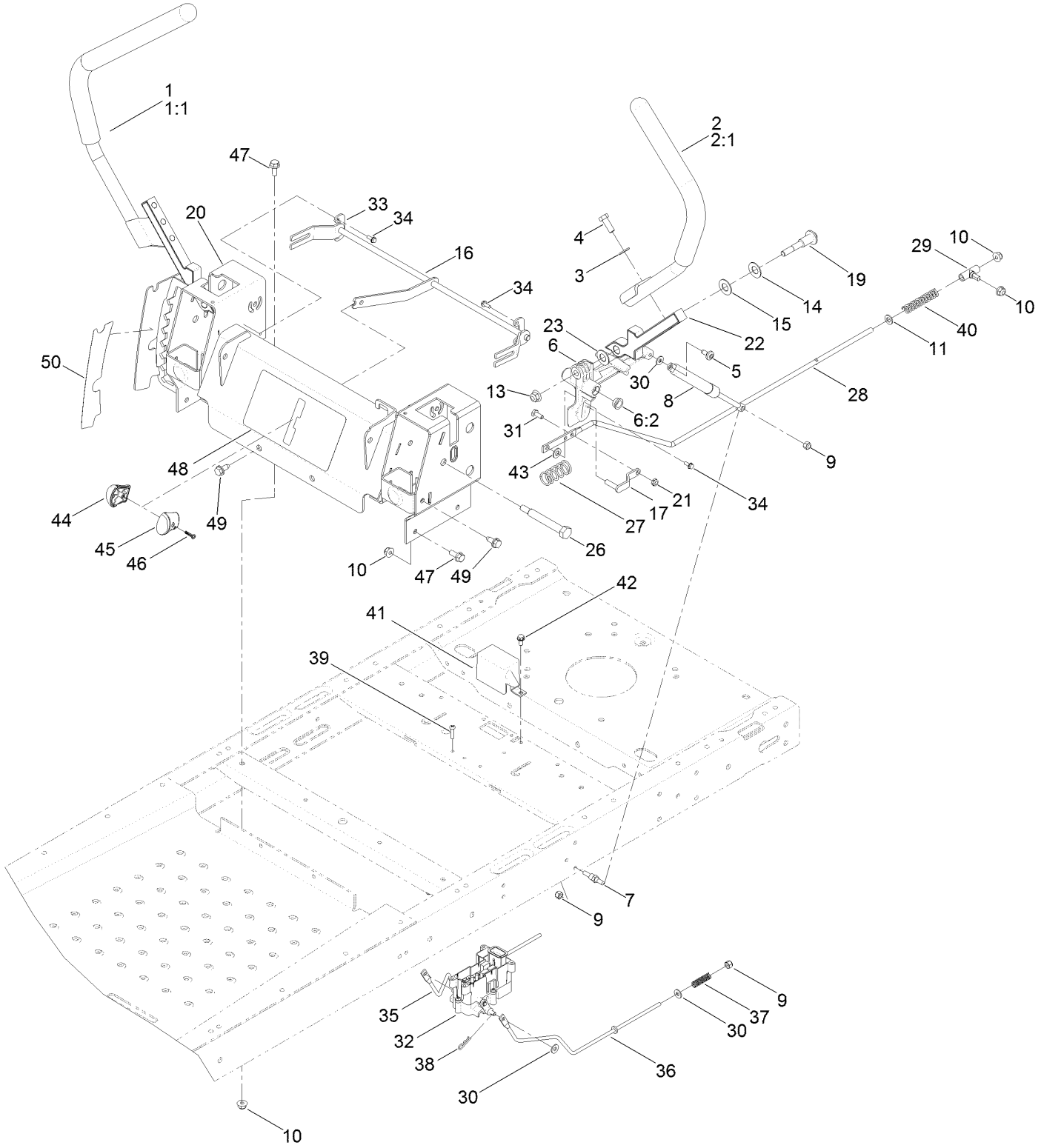

Motion Control Assembly (continued)

Ref.	Part Number	Qty.	Description
1	121-0731	1	Handle-Control, RH
1:1	121-0726	1	Grip
2	121-0730	1	Handle-Control, LH
2:1	121-0726	1	Grip
3	3256-24	4	Washer-Flat
4	323-6	4	Screw-HH
5	120-7950	2	Screw-Shoulder
6	119-3470	2	Actuator Arm ASM
6:2	256-156	2	Bushing-Flange
7	110-6810	2	Stud-Damper
8	103-2913	2	Damper-Control, Motion
9	3296-42	6	Nut-Lock, NI
10	104-8300	10	Nut-Flange, NI
11	3256-23	2	Washer-Flat
13	104-8301	4	Nut-Flange, NI
14	119-8925	2	Washer-Belleville
15	117-1240	2	Washer
16	119-8832	1	Control-Speed
17	119-3303	2	Pin-Rod, Hydro
19	117-1198	2	Bolt-Pivot
20	125-5473-03	1	Control Box ASM
21	3296-56	2	Nut-Lock, NI
22	115-5098-05	2	Lever-Control
23	120-2273	2	Washer-Nylon
26	115-5099	2	Bolt-Pivot

Ref.	Part Number	Qty.	Description
27	119-8876	2	Spring-Return
28	117-5388	2	Rod-Hydro
29	119-8842	2	Mount-Rod, Hydro
30	119-8952	8	Washer
31	321-3	2	Screw-HH
32	121-3017	1	Brake Control Module ASM
33	117-5385	2	Retainer
34	32144-1	4	Screw-Taptite
35	121-2974	1	Rod-Brake, RH
36	121-2975	1	Rod-Brake, LH
37	117-1169	4	Spring-Compression
38	3290-307	2	Pin-Cotter
39	32144-36	4	Screw-PPH
40	1-603807	2	Spring-Return, Neutral
41	119-8859	1	Cover-Brake
42	32144-4	1	Screw-HWH
43	93-6079	2	Spacer-Nylon
44	119-8935	1	Knob-RH
45	119-8936	1	Knob-LH
46	94-4496	1	Screw-PPH
47	3234-47	6	Screw-HHF
48	119-8874	1	Decal-Speed Control
49	32144-70	4	Screw-HWHTF
50	119-8871	1	Decal

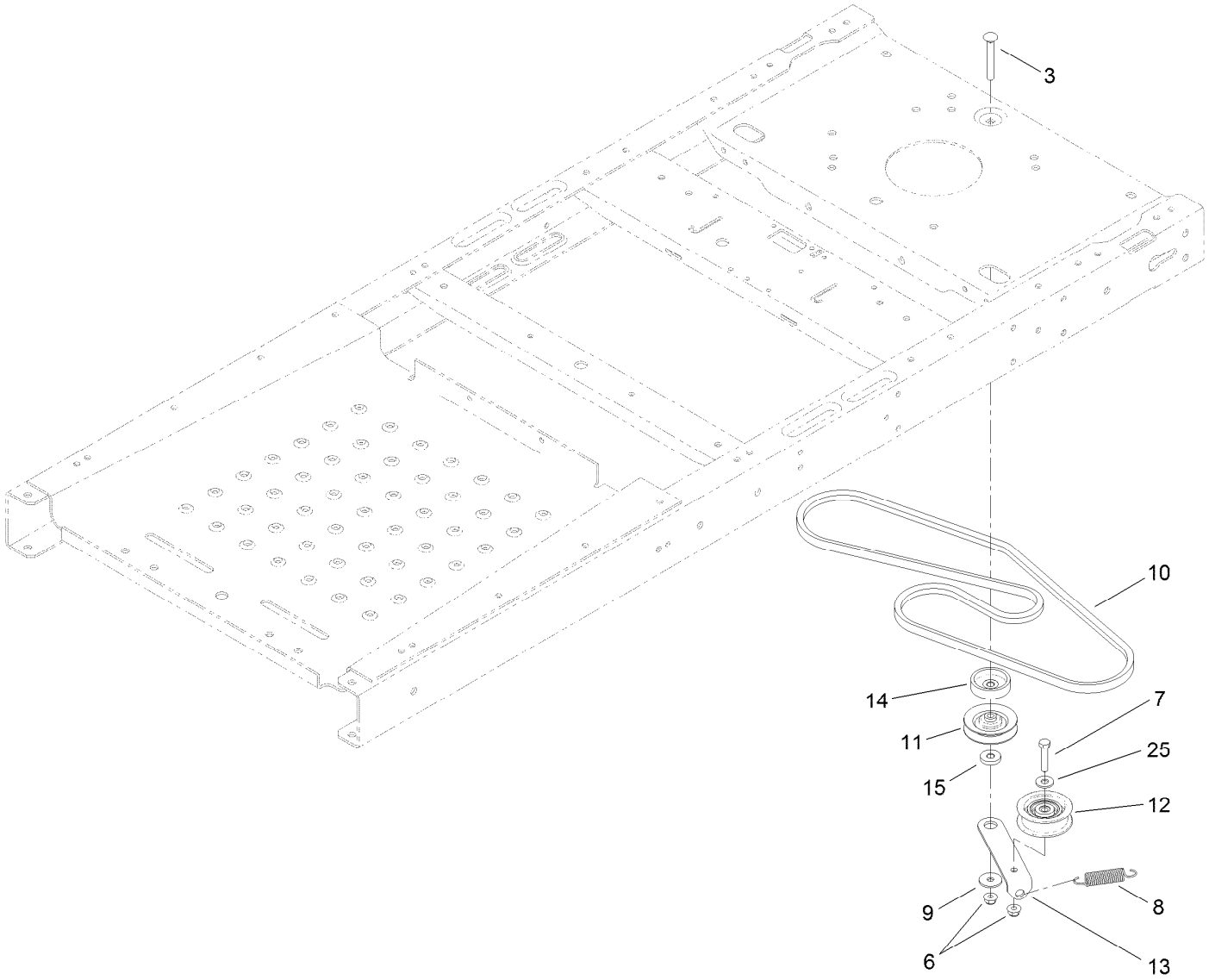

Belt and Idler Assembly

Ref.	*Part Number*	*Qty.*	*Description*
3	3230-8	1	Screw-CARR
6	104-8300	2	Nut-Flange, NI
7	322-7	1	Screw-HH
8	104-6415	1	Spring-Return, Pedal
9	5-4460	1	Washer-Pivot
10	119-3309	1	V-Belt
11	119-8822	1	Pulley-Idler
12	106-2176	1	Pulley-Idler
13	119-3326	1	Arm-Idler
14	119-3353	1	Spacer
15	119-3327	1	Spacer-Arm, Idler
25	3256-3	1	Washer-Flat

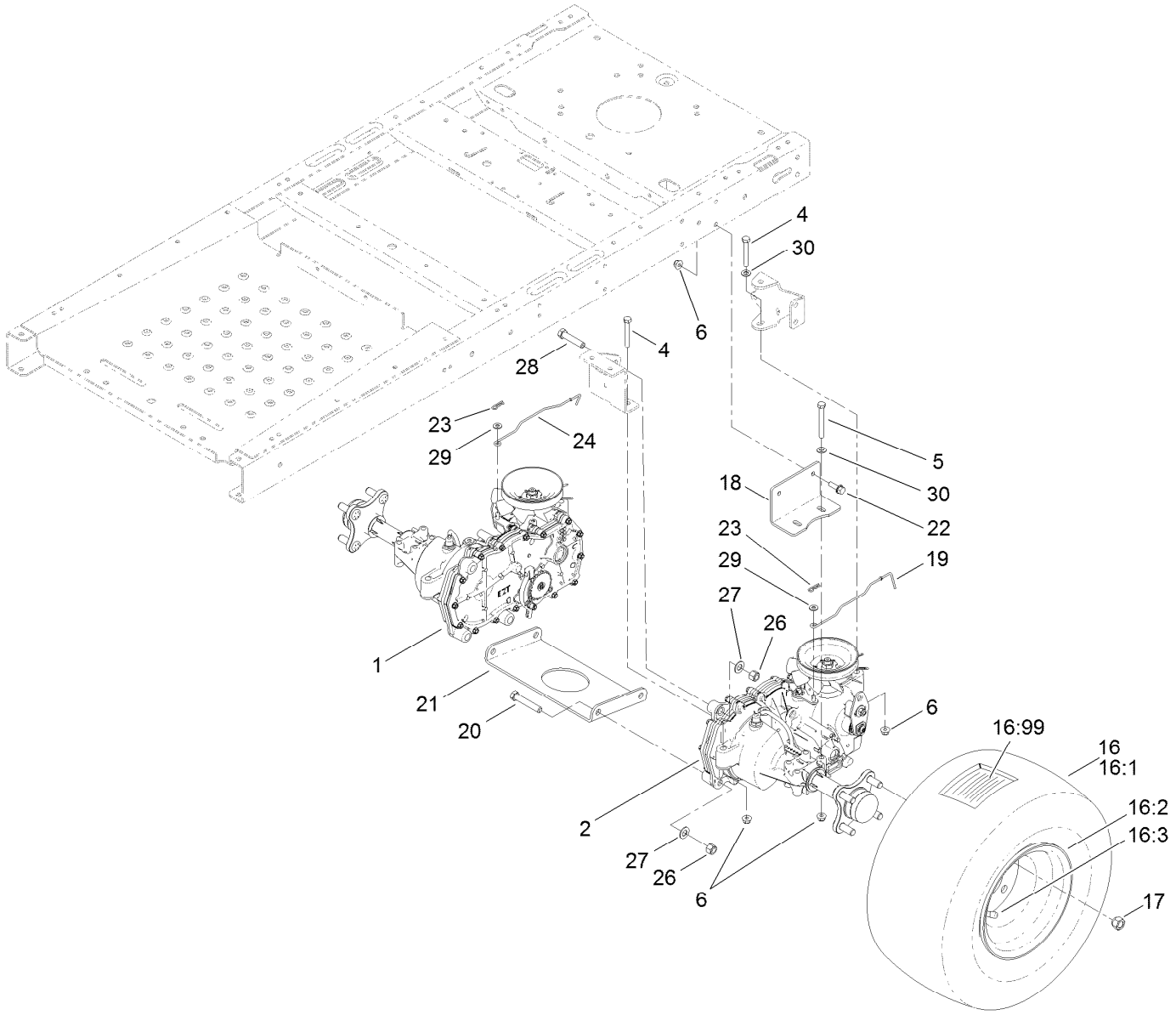

Hydro Transaxle Drive and Rear Wheel Assembly

Ref.	Part Number	Qty.	Description
1	119-3331	1	RH Hydro Transaxle ASM
2	119-3330	1	LH Hydro Transaxle ASM
4	322-11	4	Screw-HH
5	322-13	4	Screw-HH
6	104-8300	12	Nut-Flange, NI
16	120-5523	2	4 Ply Wheel And Tire ASM
16:1	119-8907	1	Tire-4 Ply
16:2	107-2475	1	Wheel
16:3	232-27	1	Stem-Valve
16:99	107-2491	1	Tube-Tire
17	242-50	8	Nut-Lug
18	117-7264-03	2	Mount-Hydro

Ref.	Part Number	Qty.	Description
19	121-2971	1	Rod-Bypass, LH
20	324-10	4	Screw-HH
21	119-3339-03	1	Plate-Cross, Hydro
22	3234-29	4	Screw-HHF
23	3290-307	2	Pin-Cotter
24	121-0752	1	Rod-Bypass, RH
26	3296-48	6	Nut-Lock, NI
27	3256-25	6	Washer-Flat
28	324-8	2	Screw-HH
29	3256-22	2	Washer-Flat
30	3256-23	6	Washer-Flat

Right Hand Hydro Transaxle Assembly No. 119-3331

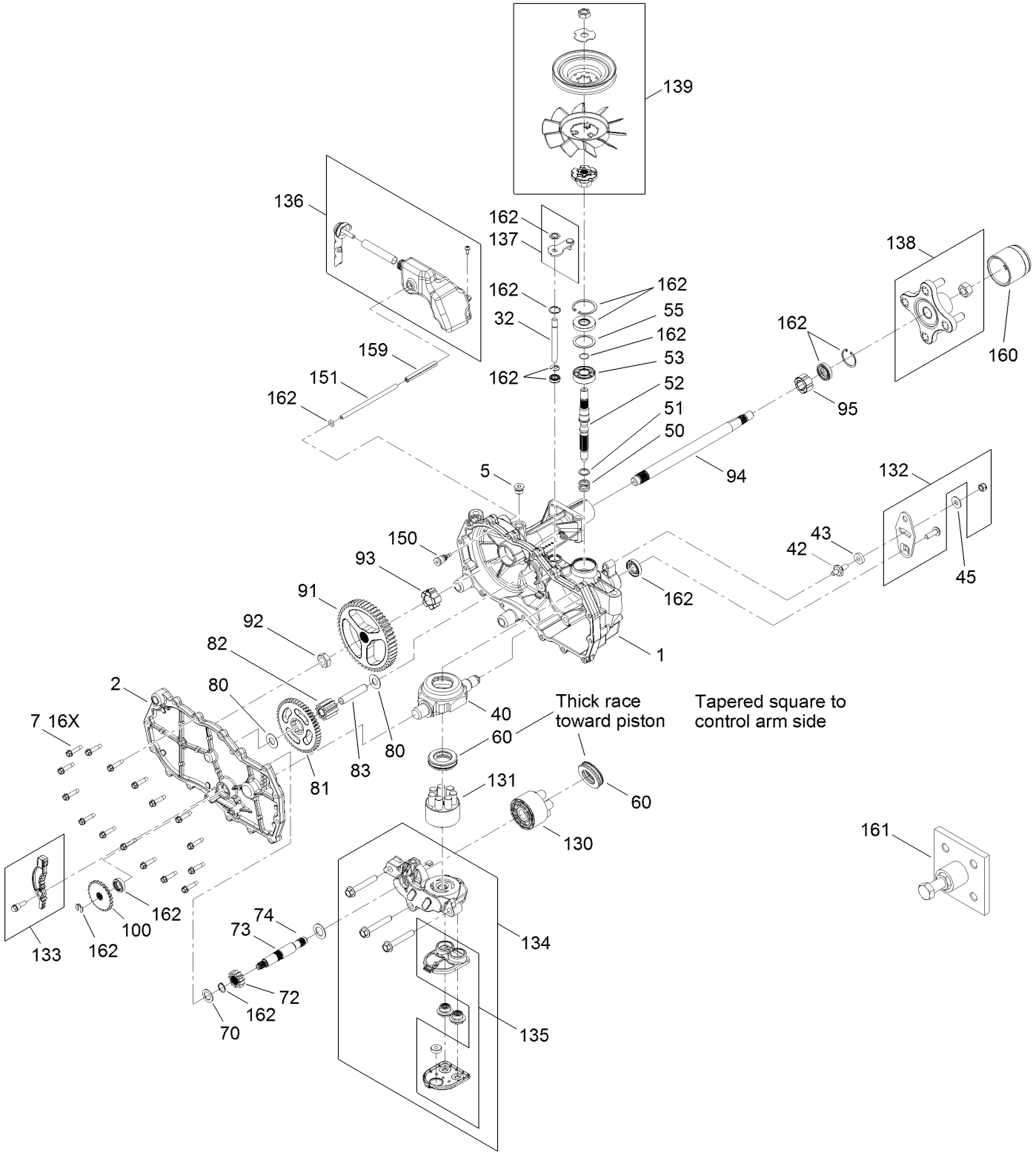

Right Hand Hydro Transaxle Assembly No. 119-3331 (continued)

Ref.	Part Number	Qty.	Description
1	120-5531	1	Main Housing ASM
2	120-5533	1	Housing Side Kit
5	104-2189	1	Plug-Thread, Straight
7	117-5359	16	Screw-HHF
13	104-2147	1	Sealant ●
32	106-8678	2	Rod-Bypass
40	104-5304	1	Swashplate-Trunnion
42	104-2116	1	Stud
43	112-9853	1	Puck-Friction
45	114-8491	1	Washer
50	120-5537	1	Spring-Compression
51	120-5538	1	Washer
52	104-5306	1	Shaft-Input
53	104-5311	1	Bearing-Ball
55	104-5308	1	Spacer
60	94-6922	1	Bearing-Thrust
70	104-5339	1	Washer-Flat
72	104-5316	1	Gear-Pinnion, 13T
73	106-8683	1	Shaft-Motor
74	104-5360	1	Washer
80	119-5541	2	Washer
81	104-5317	1	Gear-10T/48T
82	104-5318	1	Gear-Jackshaft, 10T
83	104-5329	1	Pin-Jackshaft
91	120-5539	1	Gear-Bull
92	104-2142	1	Nut-HJ
93	115-8314	1	Bushing-Inboard
94	120-5540	1	Shaft-Axle
95	120-5541	1	Bearing-Sleeve
100	106-8694	1	Disc-Brake, Cog
130	103-2666	1	Cylinder Block Kit
131	110-8561	1	Pump Block ASM
132	117-5362	1	Arm Control Kit
133	106-8688	1	Brake Arm Kit
134	112-9862	1	Center Section Filter Kit
135	114-1634	1	Filter Kit
136	121-5735	1	LH Expansion Tank Kit
137	107-2489	1	Bypass Arm Kit
138	121-5731	1	Hub Kit
139	121-5729	1	Fan Pulley Kit
150	104-5349	1	Fitting-Sae
151	115-8302	1	Hose
159	121-5728	1	Case-Tube
160	125-0041	1	Cap-Axle
161	114-8467	1	Hub-Puller, 4 Bolt
162	120-7103	1	Seal And Ring Kit

● Not illustrated

Left Hand Hydro Transaxle Assembly No. 119-3330

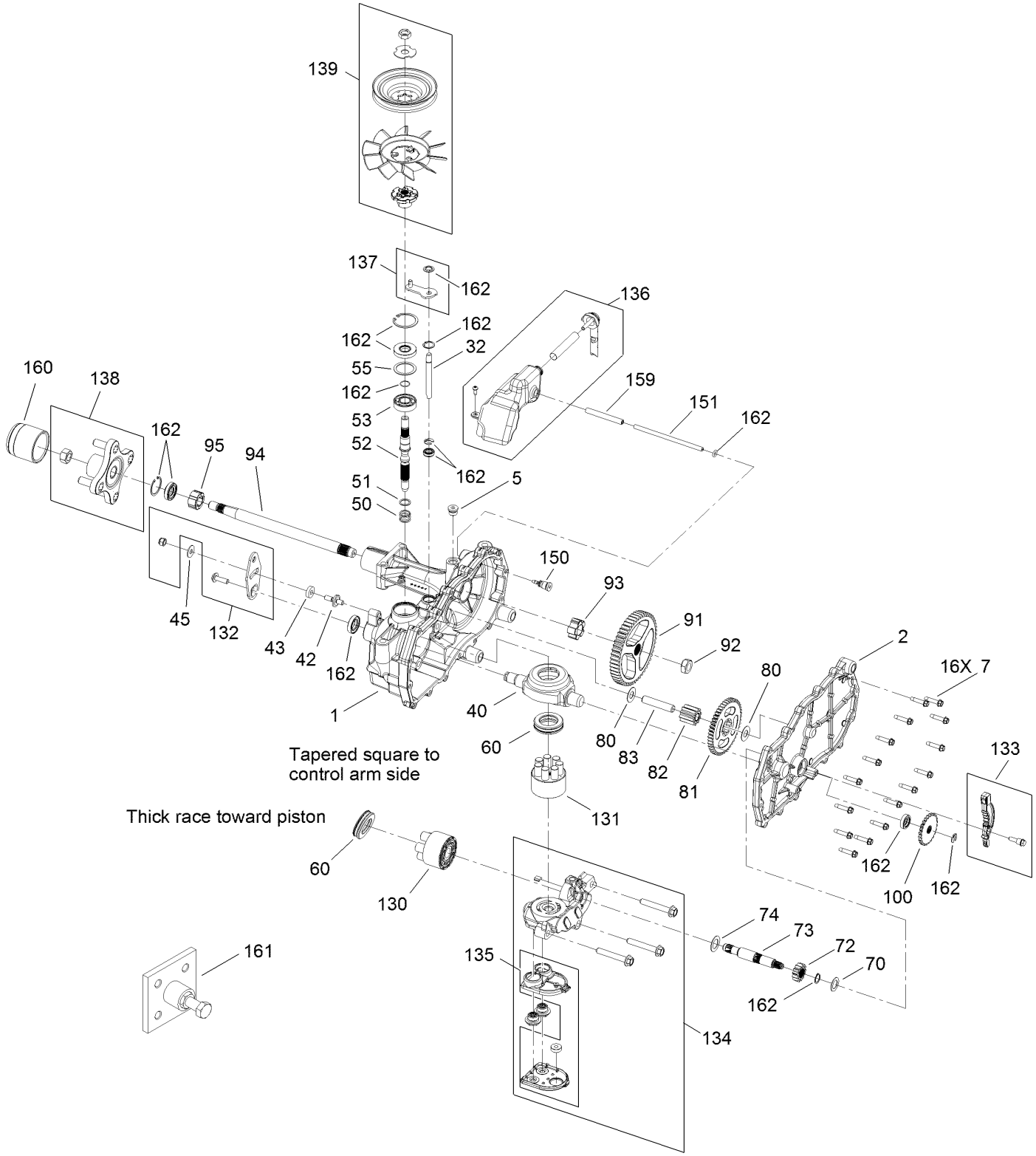

Left Hand Hydro Transaxle Assembly No. 119-3330 (continued)

Ref.	Part Number	Qty.	Description
1	120-5532	1	Main Housing ASM
2	120-5534	1	Housing Side Kit
5	104-2189	1	Plug-Thread, Straight
7	117-5359	16	Screw-HHF
13	104-2147	1	Sealant ●
32	106-8678	2	Rod-Bypass
40	104-5304	1	Swashplate-Trunnion
42	104-2116	1	Stud
43	112-9853	1	Puck-Friction
45	114-8491	1	Washer
50	120-5537	1	Spring-Compression
51	120-5538	1	Washer
52	104-5306	1	Shaft-Input
53	104-5311	1	Bearing-Ball
55	104-5308	1	Spacer
60	94-6922	1	Bearing-Thrust
70	104-5339	1	Washer-Flat
72	104-5316	1	Gear-Pinnion, 13T
73	106-8683	1	Shaft-Motor
74	104-5360	1	Washer
80	119-5541	2	Washer
81	104-5317	1	Gear-10T/48T
82	104-5318	1	Gear-Jackshaft, 10T
83	104-5329	1	Pin-Jackshaft
91	120-5539	1	Gear-Bull
92	104-2142	1	Nut-HJ
93	115-8314	1	Bushing-Inboard
94	120-5540	1	Shaft-Axle
95	120-5541	1	Bearing-Sleeve
100	106-8694	1	Disc-Brake, Cog
130	103-2666	1	Cylinder Block Kit
131	110-8561	1	Pump Block ASM
132	117-5362	1	Arm Control Kit
133	106-8688	1	Brake Arm Kit
134	112-9861	1	Center Section Filter Kit
135	114-1634	1	Filter Kit
136	121-5730	1	RH Expansion Tank Kit
137	120-5549	1	Bypass Kit
138	121-5731	1	Hub Kit
139	121-5729	1	Fan Pulley Kit
150	104-5349	1	Fitting-Sae
151	115-8302	1	Hose
159	121-5728	1	Case-Tube
160	125-0041	1	Cap-Axle
161	114-8467	1	Hub-Puller, 4 Bolt
162	120-7103	1	Seal And Ring Kit

● Not illustrated

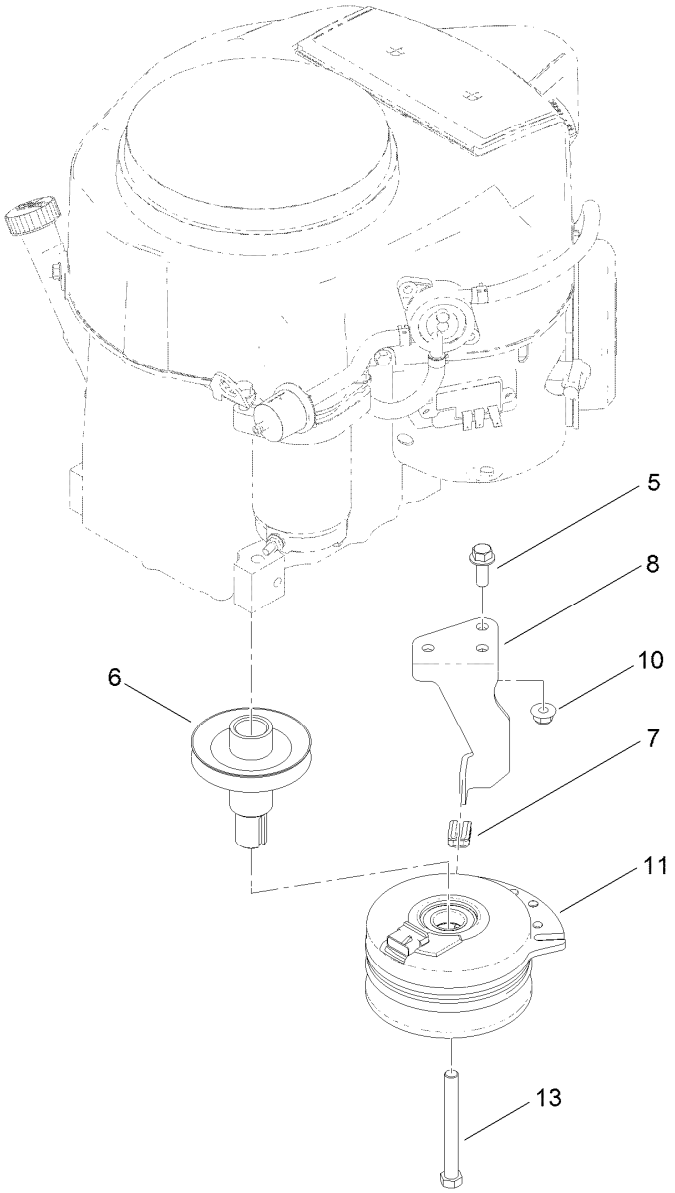

Clutch Assembly

Ref.	Part Number	Qty.	Description
5	3234-42	1	Screw-HHF
6	119-3318	1	Pulley-Engine
7	120-2217	1	Isolator-Clutch
8	119-8884	1	Stop-Clutch
10	104-8301	1	Nut-Flange, NI
11	117-7468	1	Clutch-Electric
13	3212-16	1	Screw-HH

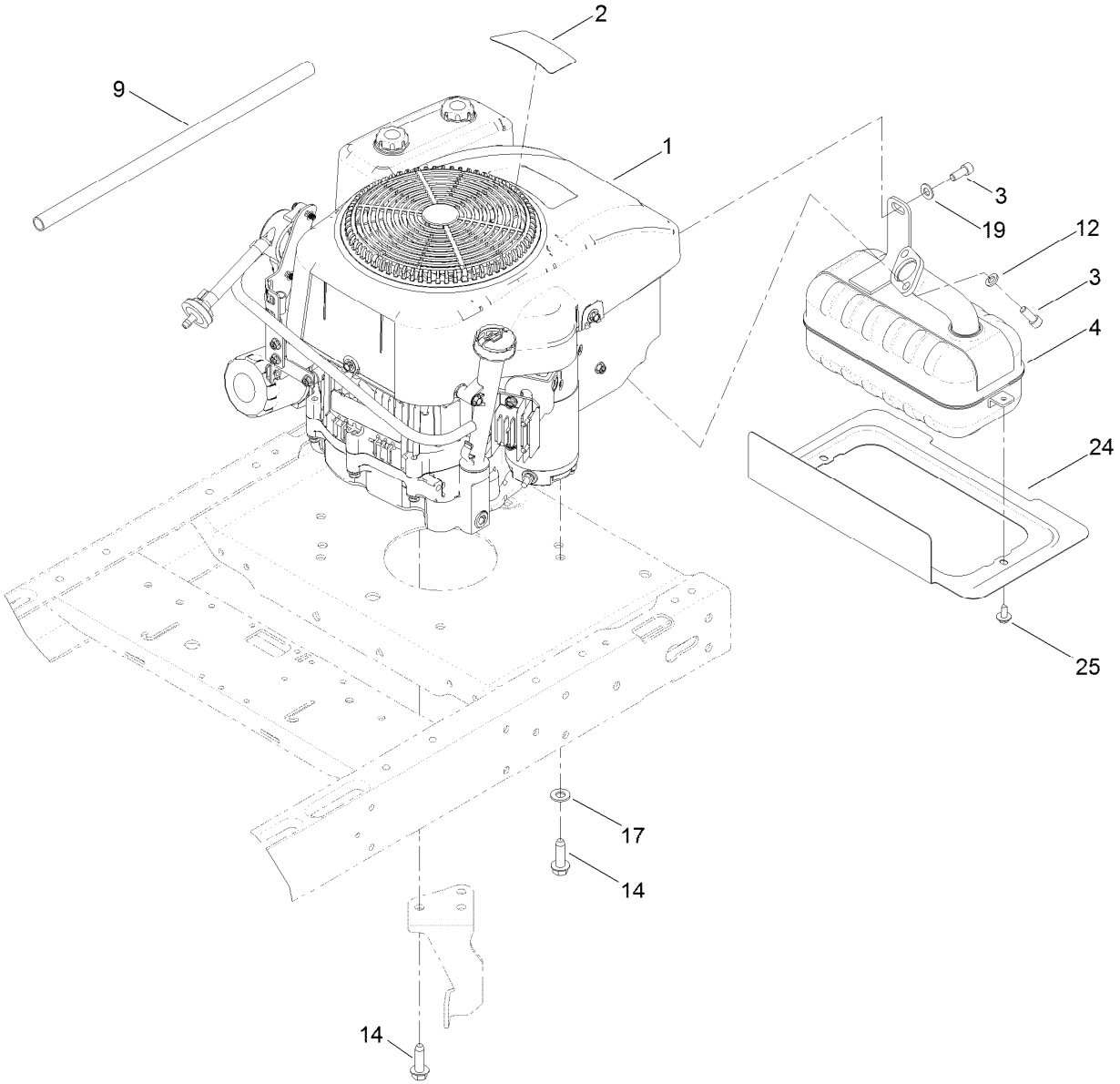

Engine and Muffler Assembly

Ref.	Part Number	Qty.	Description
1	120-4335	1	Engine-Lc1P92F-1
2	125-1700	1	Decal-Engine
3	3274-10	3	Screw-HSH
4	117-7412	1	Muffler
9	106-7022	1	Tube-Drain, Oil
12	3253-4	2	Washer-Lock
14	32144-109	4	Screw-Taptite
17	3256-24	3	Washer-Flat
19	3256-23	1	Washer-Flat
24	121-2973-03	1	Shield-Heat
25	46-8560	2	Screw-HHFTF

Engine Assembly No. 1

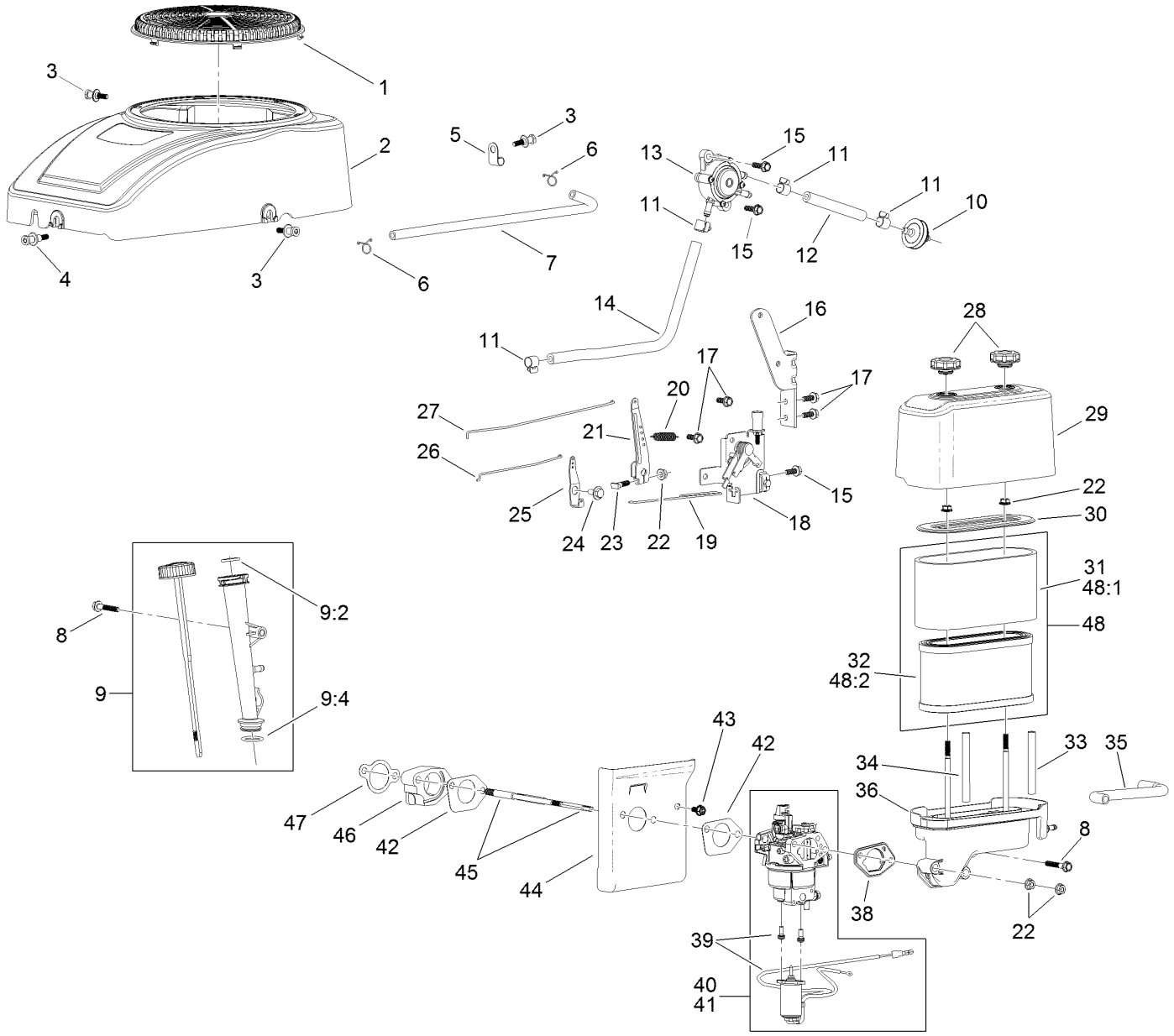

Engine Assembly No. 1 (continued)

Ref.	Part Number	Qty.	Description
1	120-4219	1	Screen-Stationary
2	120-4218	1	Shroud-Fan
3	120-4217	3	Screw-Shoulder, HH
4	120-4214	1	Screw-Shoulder, HH
5	120-4287	1	Clamp-J
6	121-0114	2	Clamp-Hose
7	120-4372	1	Line-Pulse
8	120-4284	2	Screw-HHF
9	120-4355	1	Dipstick And Tube Kit
9:2	120-4348	1	O-Ring
9:4	120-4282	1	O-Ring
10	120-4253	1	Filter-Fuel
11	120-4251	4	Clamp-Fuel Line
12	120-4371	1	Line-Fuel
13	120-4353	1	Pump-Pulse, Fuel
14	120-4370	1	Line-Fuel
15	120-4232	3	Screw-HHF
16	120-4357	1	Bracket-Pump, Fuel
17	120-4234	4	Screw-HHF
18	120-4358	1	Control-Throttle
19	120-4243	1	Rod-Throttle
20	120-4337	1	Spring-Governor
21	120-4352	1	Arm-Governor
22	120-4236	5	Nut-Flange
23	120-4238	1	Bolt-Arm, Governor
24	120-4241	1	Screw-Shoulder, HHF
25	120-4242	1	Bellcrank-Choke
26	120-4240	1	Rod-Choke
27	120-4239	1	Rod-Governor
28	120-4312	2	Nut-Speed
29	120-4311	1	Cover-Filter, Air
30	120-4310	1	Retainer-Air Filter
31	120-4309	1	Prefilter
32	120-4308	1	Filter-Air
33	120-4333	1	Spacer-Filter, Air
34	120-4334	1	Spacer-Filter, Air
35	120-4255	1	Tube-Breather
36	120-4325	1	Base-Filter, Air
38	120-4323	1	Gasket-Base, Filter
39	127-9022	1	Solenoid Kit
40	127-9027	1	Carburetor Kit
41	120-4364	1	Carburetor Repair Kit
42	120-4247	2	Gasket-Carburetor
43	120-4216	1	Screw-HHF
44	120-4248	1	Shield-Heat
45	120-4202	2	Stud-Mount, Carburetor
46	120-4249	1	Insulator-Carburetor
47	120-4250	1	Gasket-Carburetor
48	127-9193	1	Air Filter Kit
48:1	120-4309	1	Prefilter
48:2	120-4308	1	Filter-Air

Engine Assembly No. 2

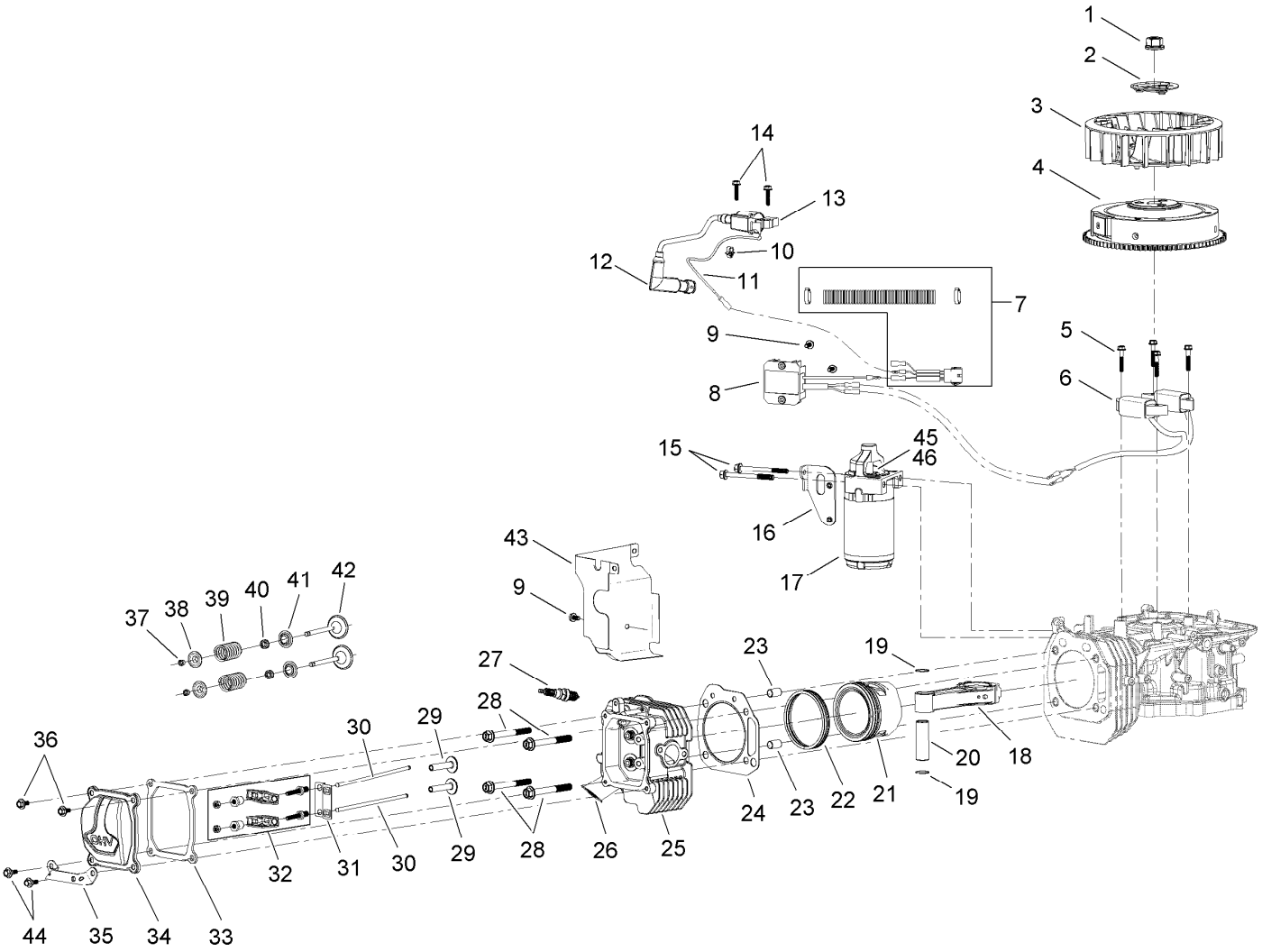

Engine Assembly No. 2 (continued)

Ref.	Part Number	Qty.	Description
1	120-4213	1	Nut-Flange
2	120-4212	1	Pulley-Starter
3	120-4211	1	Fan-Cooling
4	120-4399	1	Flywheel
5	120-4223	4	Screw-HHF
6	120-4367	1	Charge Coil ASM
7	120-4381	1	Wire Harness Kit
8	120-4433	1	Regulator-Voltage
9	120-4216	3	Screw-HHF
10	120-4316	1	Clamp-Wire
11	120-4375	1	Wire-Kill, Ignition
12	120-4226	1	Boot-Plug, Spark
13	120-4368	1	Ignition Coil ASM
14	120-4225	2	Screw-HHF
15	120-4231	2	Screw-HHF
16	120-4230	1	Bracket-Starter
17	120-4339	1	Starter-Electric
18	120-4292	1	Connecting Rod ASM
19	120-4288	2	Ring-Retaining, Piston Pin
20	120-4291	1	Pin-Piston
21	120-4290	1	Piston
22	120-4289	1	Ring Set
23	120-4200	2	Pin-Dowel

Ref.	Part Number	Qty.	Description
24	120-4201	1	Gasket-Cyclinder
25	120-4203	1	Head-Cylinder
26	120-4317	1	Gasket-Exhaust
27	120-4204	1	Plug-Spark
28	120-4205	4	Screw-HHF
29	120-4298	2	Lifter-Valve
30	120-4340	2	Rod-Push
31	120-4300	1	Plate
32	120-4301	1	Rocker Arm Kit
33	120-4206	1	Gasket-Cover, Valve
34	120-4207	1	Cover-Valve
35	120-4345	1	Bracket-Muffler
36	120-4209	2	Screw-Shoulder, HHF
37	120-4307	2	Keeper-Valve
38	120-4306	2	Retainer-Spring, Valve
39	120-4305	2	Spring-Valve
40	120-4304	2	Seal-Stem, Valve
41	120-4303	2	Seat-Spring, Valve
42	120-4302	2	Valve Set
43	120-4215	1	Shield
44	120-4210	2	Screw-Shoulder, HHF
45	120-4392	1	Starter Repair Kit
46	120-4398	1	Pinion

Engine Assembly No. 3

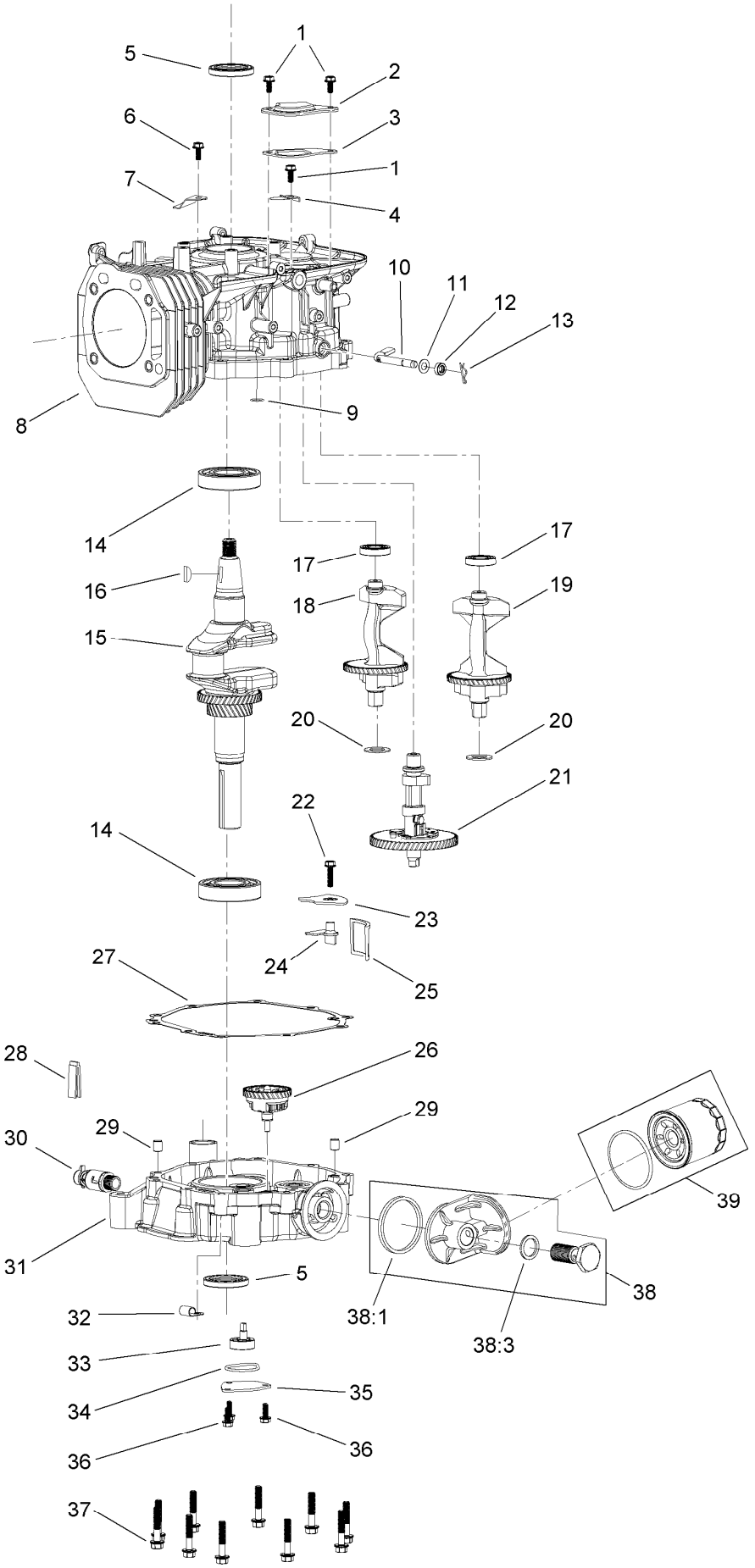

Engine Assembly No. 3 (continued)

Ref.	Part Number	Qty.	Description
1	120-4216	3	Screw-HHF
2	120-4265	1	Plate-Breather
3	120-4264	1	Gasket-Breather
4	120-4263	1	Valve-Reed
5	120-4267	2	Seal-Oil
6	120-4234	1	Screw-HHF
7	120-4268	1	Retainer
8	120-4336	1	Crankcase
9	120-4262	1	O-Ring
10	120-4382	1	Shaft-Governor
11	120-4258	1	Washer-Plain
12	120-4257	1	Seal-Oil
13	120-4256	1	Pin-Hair
14	120-4261	2	Bearing-Ball
15	120-4293	1	Crankshaft
16	120-4320	1	Key-Woodruff
17	120-4266	2	Bearing-Ball
18	120-4294	1	Balancer-RH
19	120-4296	1	Balancer-LH
20	120-4295	2	Washer
21	120-4297	1	Camshaft

Ref.	Part Number	Qty.	Description
22	120-4225	1	Screw-HHF
23	120-4342	1	Cover-Strainer, Oil
24	120-4279	1	Plate-Baffle, Oil
25	120-4341	1	Strainer-Oil
26	120-4338	1	Gear-Governor
27	120-4260	1	Gasket-Crankcase
28	120-4275	1	Deflector-Oil, Rubber
29	120-4274	2	Pin-Dowel
30	120-4321	1	Valve-Drain, Oil
31	120-4327	1	Cover-Crankcase
32	120-4287	1	Clamp-J
33	120-4344	1	Oil Pump ASM
34	120-4343	1	Seal-Pump, Oil
35	120-4270	1	Cover-Pump, Oil
36	120-4232	3	Screw-HHF
37	120-4273	10	Screw-HHF
38	120-4363	1	Oil Adaptor Kit
38:1	120-4362	1	Seal-Adaptor, Oil
38:3	120-4360	1	Washer-Filter, Oil
39	120-4276	1	Filter-Oil

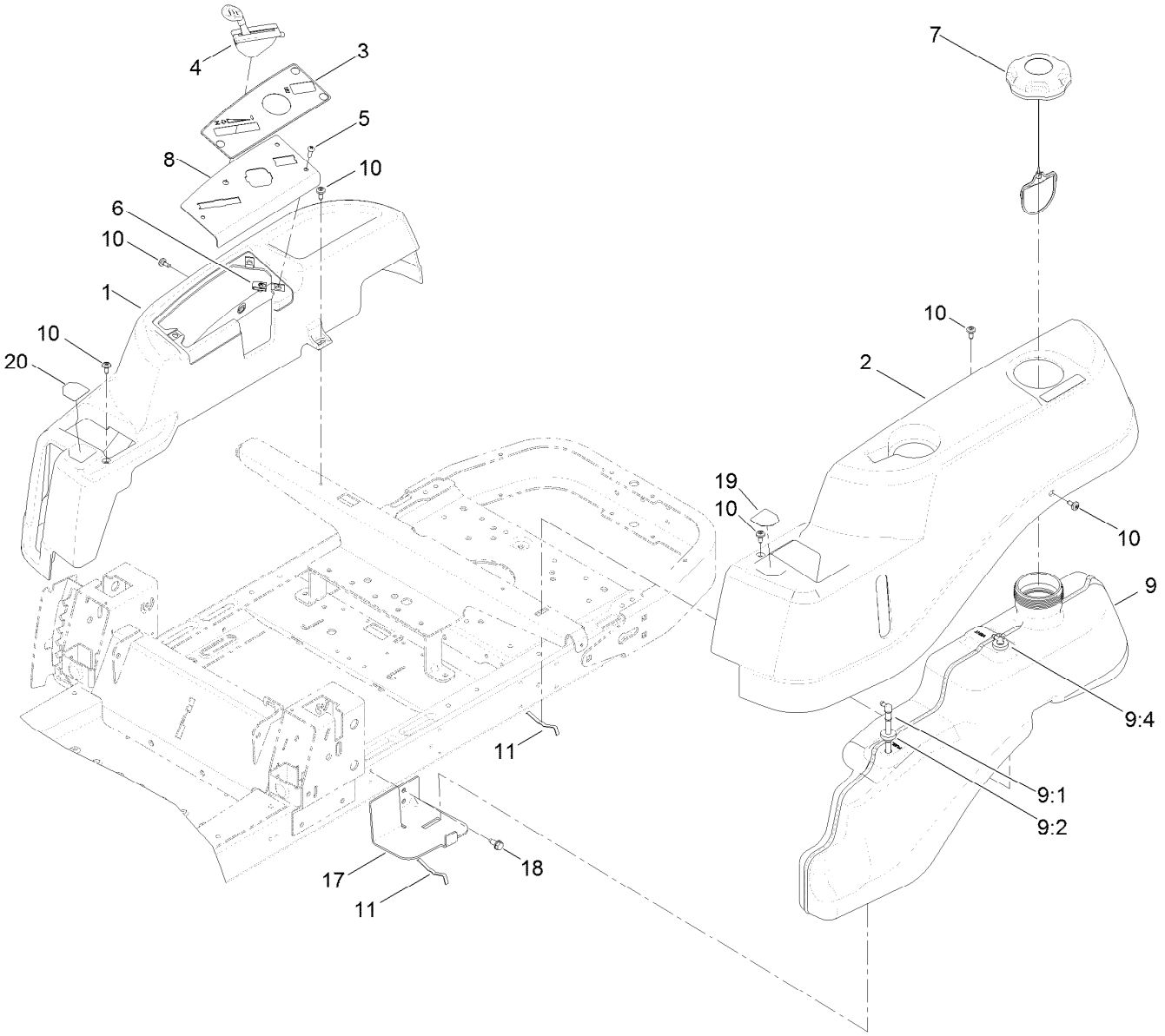

Body Styling and Fuel Pod Assembly

Ref.	Part Number	Qty.	Description
1	119-3335	1	Pod-RH
2	119-3334	1	Pod-LH
3	121-0771	1	Decal-Panel, Control
4	121-0767	1	Cable-Throttle And Choke
5	3258-166	3	Screw-PRH
6	107069	3	Clip
7	120-5461	1	Cap-Fuel, Ratcheting
8	119-3378-03	1	Plate-Control
9	119-3324	1	Fuel Tank ASM

Ref.	Part Number	Qty.	Description
9:1	121-0793	1	Connector-Elbow, 90 DEG
9:2	46-6560	2	Bushing
9:4	117-7400	1	Fitting-Plastic
10	120-7950	6	Screw-Shoulder
11	609830	2	Spring
17	119-3476-03	1	Support-Tank, Front
18	32144-70	2	Screw-HWHTF
19	119-8814	1	Decal-Control Lever, LH
20	119-8815	1	Decal-Control Lever, RH

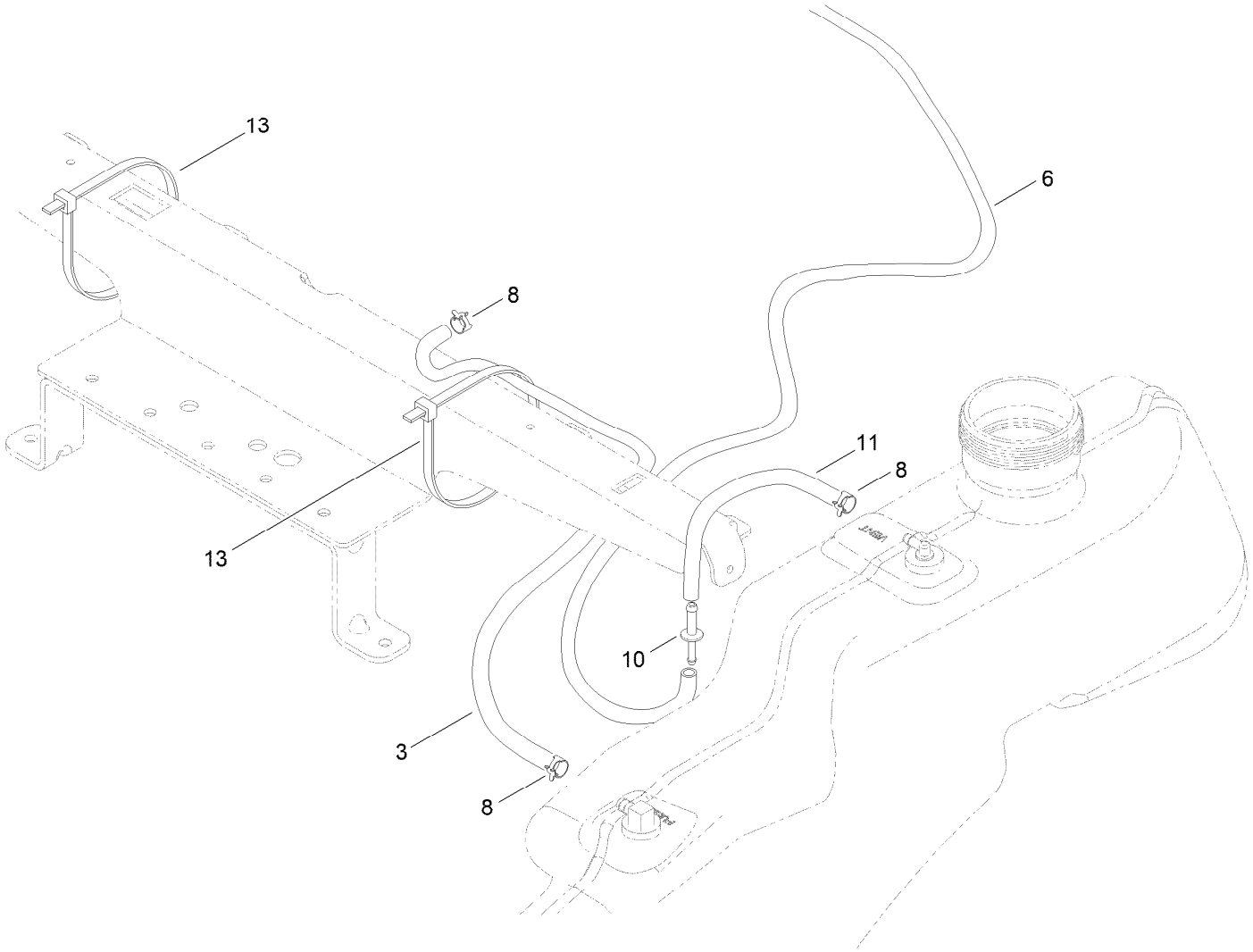

Fuel Delivery Assembly

Ref.	Part Number	Qty.	Description
3	109-0307	1	Hose-Fuel
6	110-3254	1	Hose-Fuel
8	2412-98	3	Clamp-Hose
10	117-5399	1	Adaptor-Orifice
11	110-1876	1	Hose-Fuel
13	3334-945	2	Tie-Cable

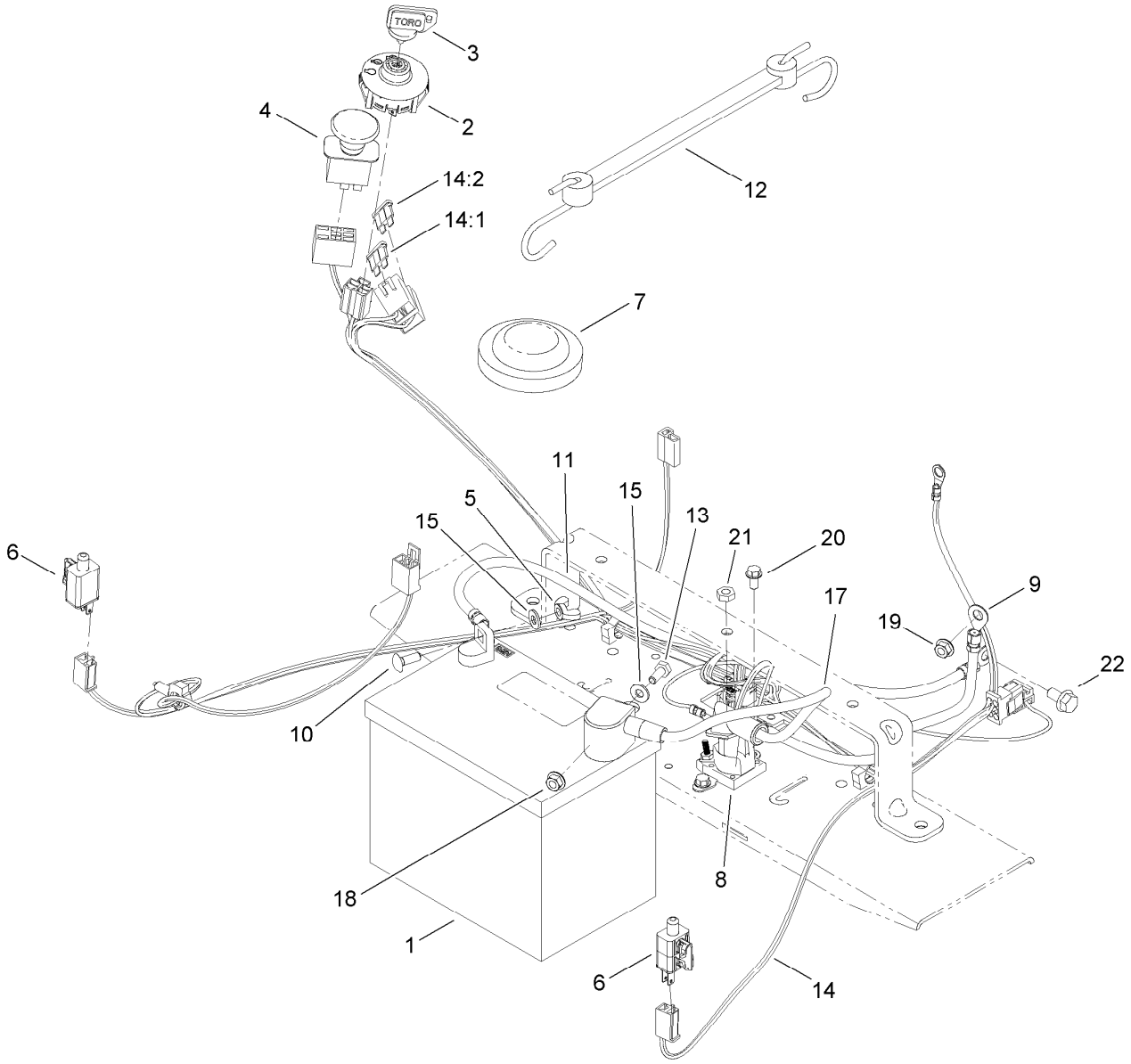

Electrical Assembly

Ref.	Part Number	Qty.	Description
1	105-1692	1	Battery-Dry
2	117-2221	1	Switch-Ignition
3	63-8360	1	Key-Ignition
4	103-5221	1	Switch-PTO
5	32103-22	1	Nut-Wing
6	110-6765	2	Switch
7	100-3524	1	Switch-Seat
8	117-1197	1	Solenoid
9	121-0711	1	Cable-Battery, Positive
10	3229-1	1	Bolt-CARR
11	119-8899	1	Cable-Battery, Black
12	104-2466	1	Holddown-Battery

Ref.	Part Number	Qty.	Description
13	321-3	1	Screw-HH
14	121-5652	1	Harness-Wire
14:1	109103	1	Fuse-Blade, 30 Amp
14:2	109102	1	Fuse-Blade, 25 Amp
15	3256-22	2	Washer-Flat
17	119-8897	1	Cable-Battery, Red
18	32128-33	1	Nut-HF
19	33003-00	1	Nut-HF
20	32144-4	2	Screw-HWH
21	3220-2	2	Nut-Jam
22	3234-47	1	Screw-HHF

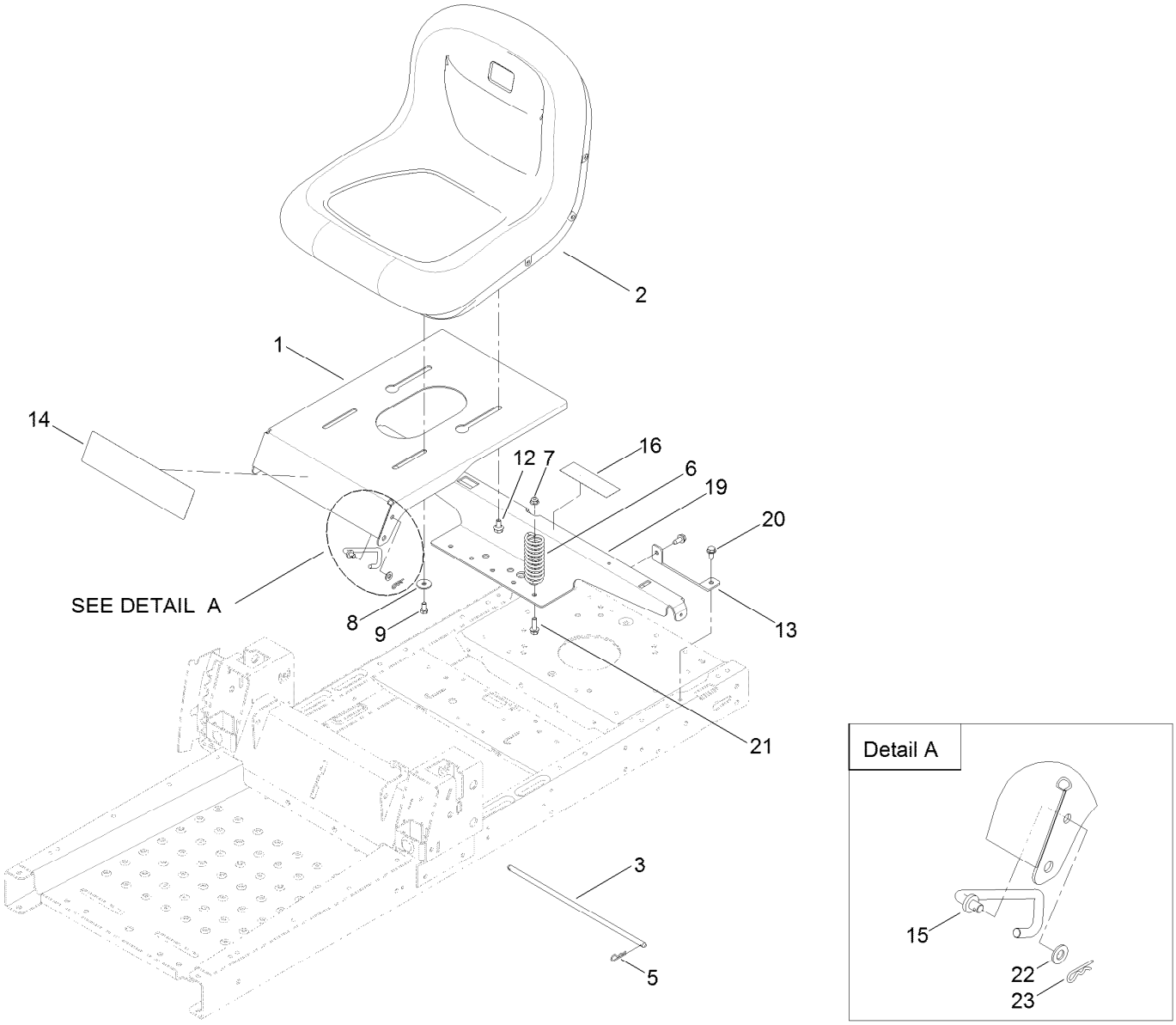

Seat Assembly

Ref.	Part Number	Qty.	Description
1	119-3391-01	1	Pan-Seat
2	119-8828	1	Seat-15 Inch
3	119-3433	1	Rod-Pivot, Narrow
5	3290-250	2	Pin-Cotter
6	92-7054	3	Spring-Compression
7	104-8300	3	Nut-Flange, NI
8	5-4460	2	Washer-Pivot
9	322-2	2	Screw-HH
12	37-8771	2	Bolt-Shoulder

Ref.	Part Number	Qty.	Description
13	119-3431-03	2	Support-Tank, Rear
14	130-0681	1	Decal-Timecutter
15	119-8972	1	Stop-Seat
16	106-8717	1	Decal-Service
19	121-0732-03	1	Support-Pod
20	32144-70	4	Screw-HWHTF
21	3234-29	3	Screw-HHF
22	3256-23	1	Washer-Flat
23	3290-307	1	Pin-Cotter

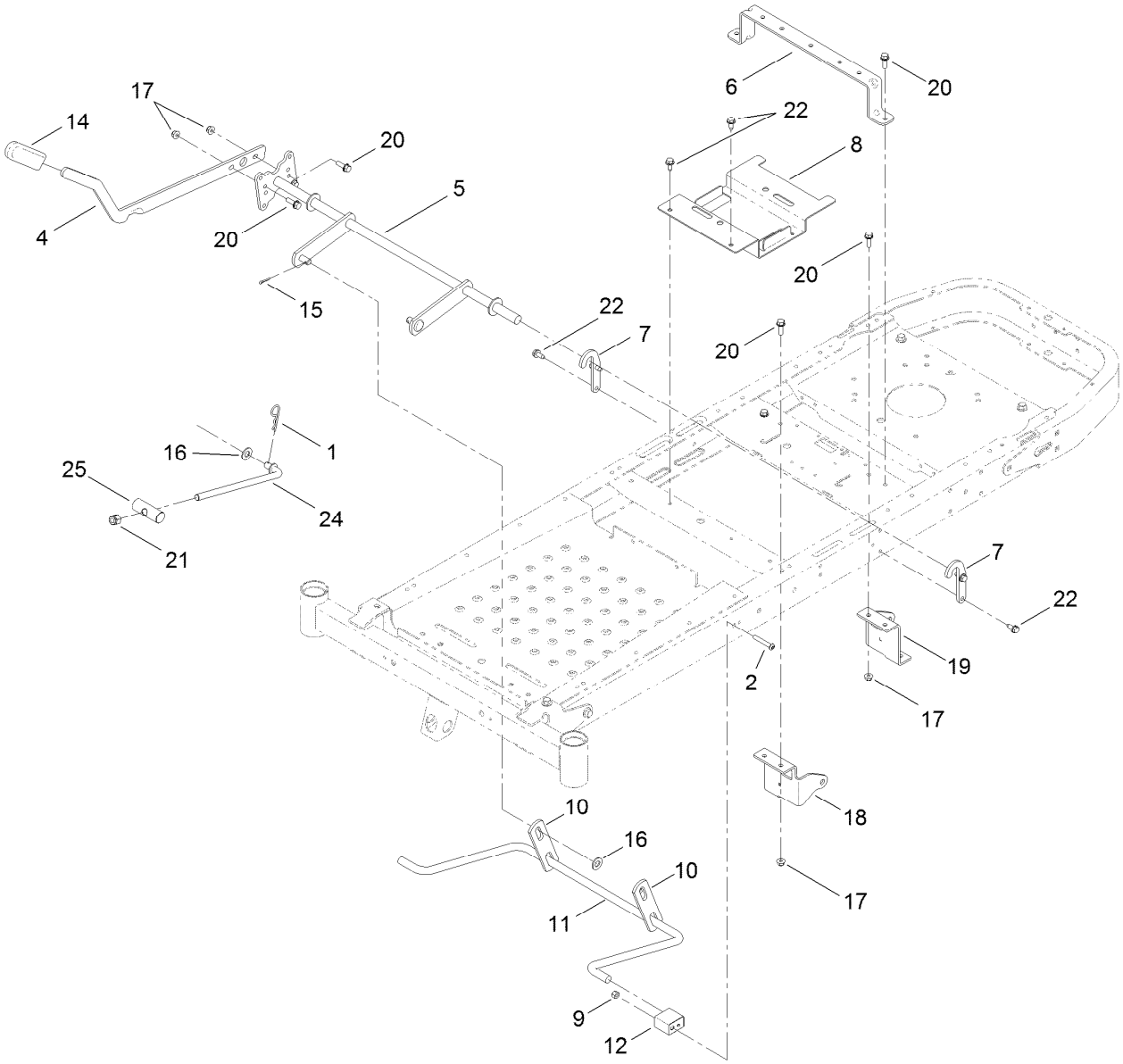

Deck Lift Assembly

Ref.	Part Number	Qty.	Description
1	1-806005	1	Pin-Cotter
2	120-5499	2	Screw-HSBH
4	119-3427-03	1	Lever-Lift
5	117-7346-03	1	Lift-Deck
6	119-3435-03	1	Brace-Seat, Rear
7	119-8875	2	Bracket-Lift
8	119-3406-03	1	Bracket-Battery
9	3296-29	2	Nut-Lock, NI
10	108-7840	2	Link-Lift
11	108-7839	1	Arm-Lift, Rear
12	108-7845	2	Block-Pivot

Ref.	Part Number	Qty.	Description
14	1-633268	1	Grip-Lever
15	3272-10	2	Pin-Cotter
16	3256-26	3	Washer-Flat
17	104-8300	6	Nut-Flange, NI
18	119-8861-01	1	Mount-Hydro, Front (RH)
19	119-8862-01	1	Mount-Hydro, Front (LH)
20	3234-29	6	Screw-HHF
21	3296-19	1	Nut-Hex
22	32144-70	6	Screw-HWHTF
24	104-8047	1	Rod-Trunion
25	119-8810	1	Pin-Pivot

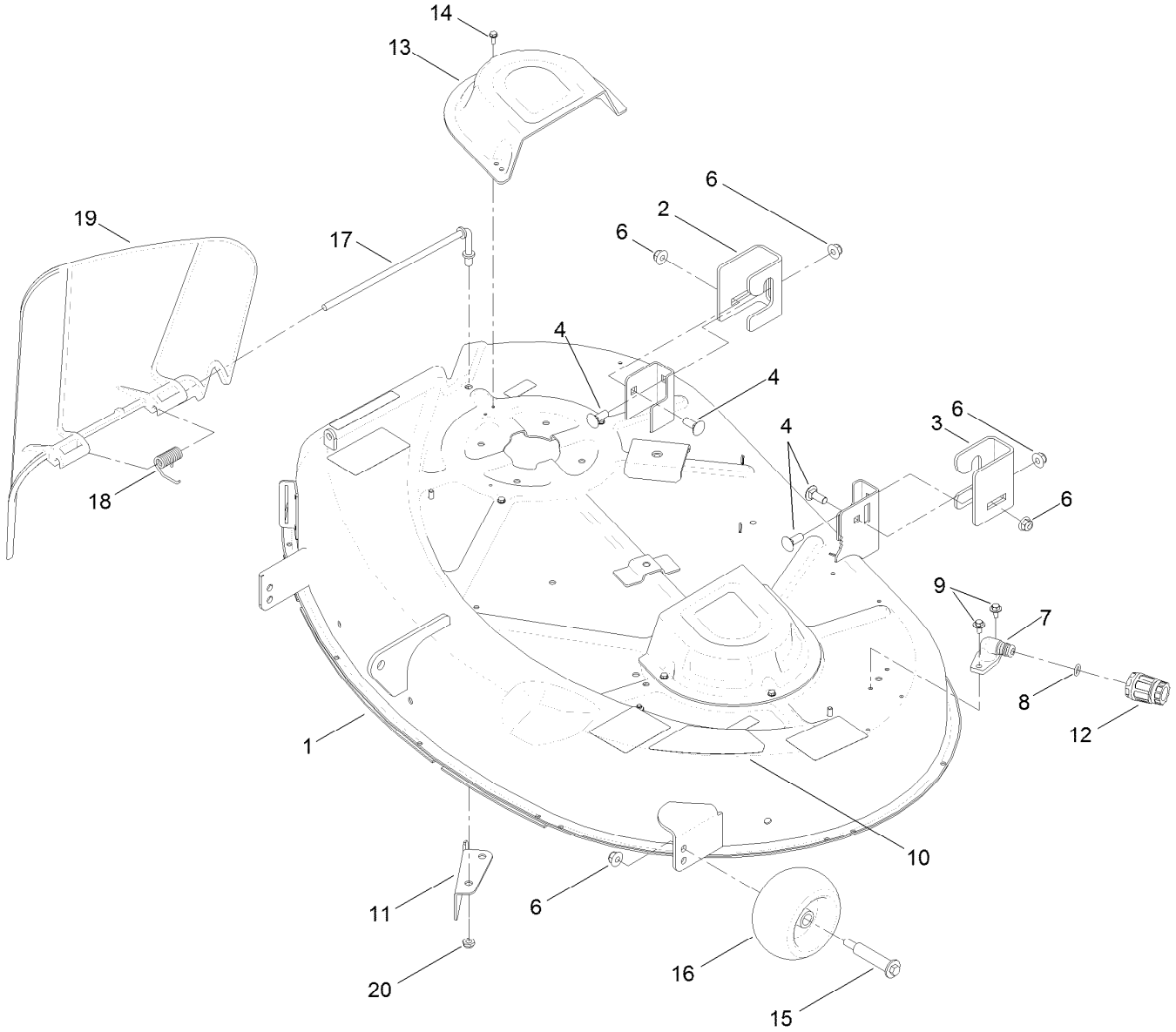

42 Inch Deck Assembly

Ref.	Part Number	Qty.	Description
1	119-8840	1	42 Inch Deck And Decal ASM
2	119-3494	1	Bracket-Hanger, RH
3	119-3496	1	Bracket-Hanger, LH
4	3231-2	4	Bolt-CARR
6	104-8301	6	Nut-Flange, NI
7	95-2747	1	Fitting-Washout
8	46-6290	1	O-Ring
9	46-8560	2	Screw-HHFTF
10	117-1222	1	Decal

Ref.	Part Number	Qty.	Description
11	112-3983-03	1	Baffle-Cutoff
12	95-3270	1	Connector-Hose
13	108-7889	2	Cover-Belt
14	32144-1	6	Screw-Taptite
15	112-3977	2	Bolt-Shoulder
16	1-603299	2	Roller-Scalp, Anti
17	112-4026	1	Rod-Pivot
18	110-6694	1	Spring-Torsion
19	112-3951	1	Deflector
20	3296-59	1	Nut-Lock, NI

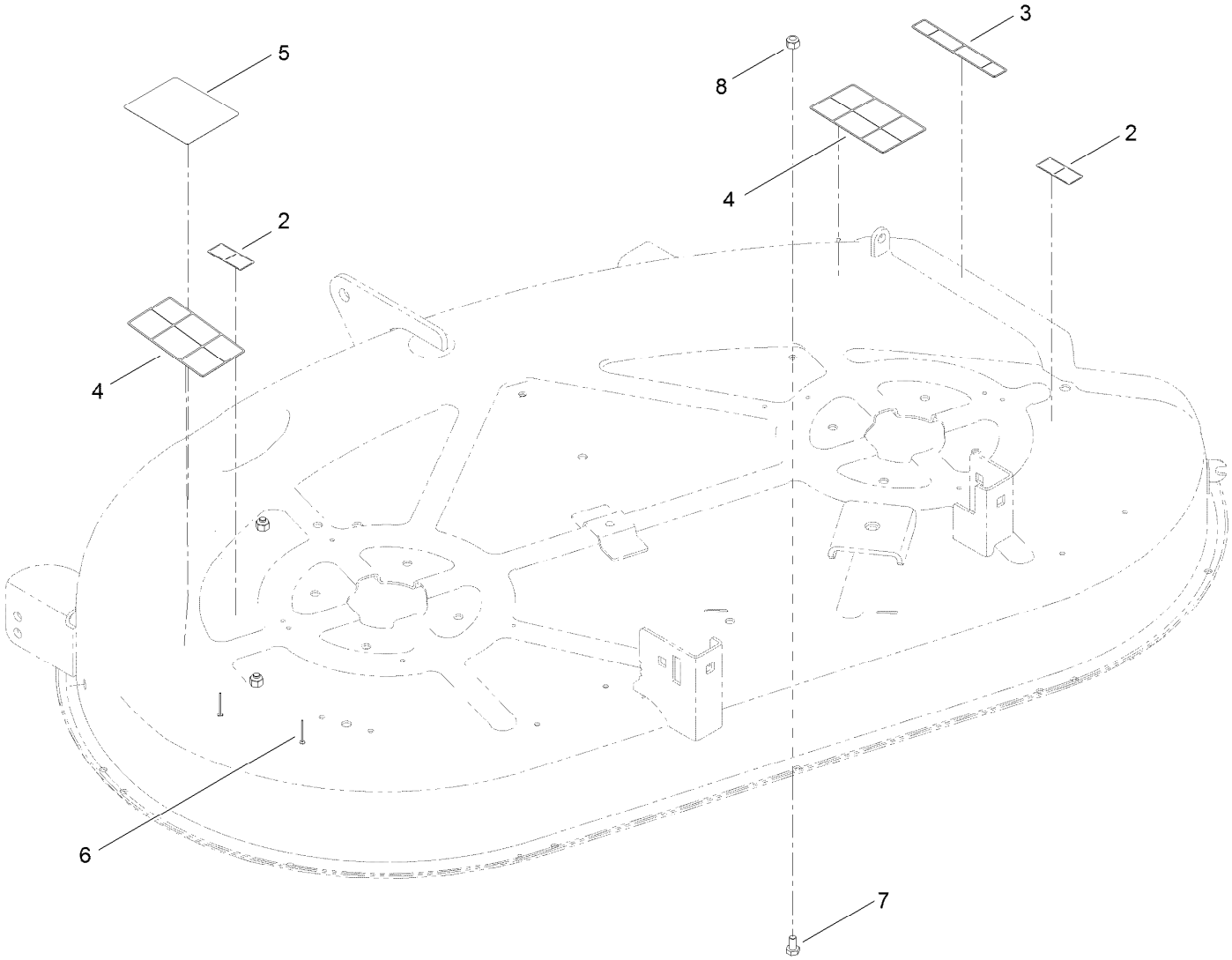

42 Inch Deck Assembly No. 119-8840

Ref.	*Part Number*	*Qty.*	*Description*
2	114-1606	2	Decal-Danger
3	93-7009	1	Decal-Danger
4	110-6691	2	Decal-Danger
5	105-7015	1	Decal-Routing, Belt
6	3290-282	2	Rivet-Blind
7	321-2	3	Screw-HH
8	3296-42	3	Nut-Lock, NI

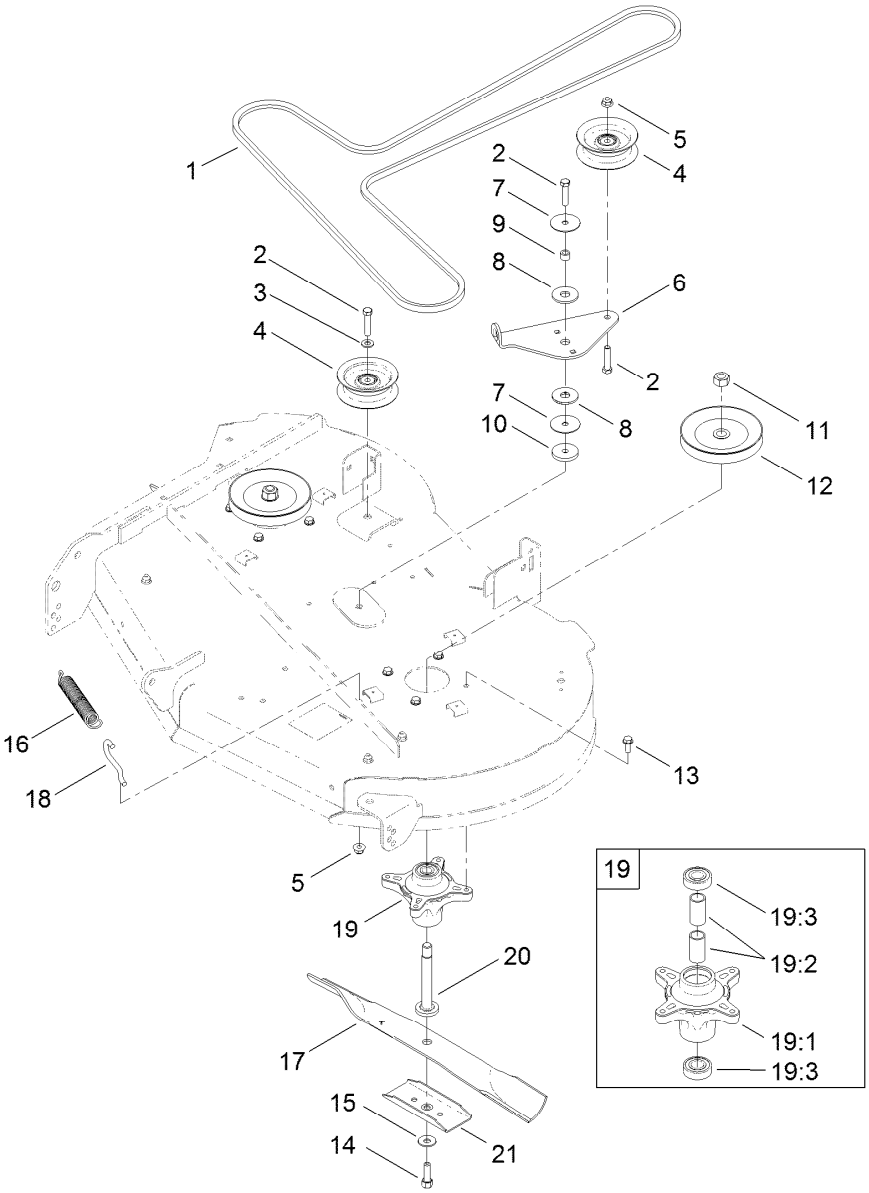

42 Inch Deck, Belt and Blade Assembly

Ref.	Part Number	Qty.	Description
1	119-8819	1	V-Belt
2	323-9	2	Screw-HH
3	3256-24	1	Washer-Flat
4	106-2175	2	Pulley-Idler, Flat
5	104-8301	1	Nut-Flange, NI
6	114-8540	1	Arm-Idler
7	120-2229	2	Washer
8	114-0463	2	Washer-Friction, Composite
9	115-4986	1	Spacer
10	323-7	1	Screw-HH
11	3219-6	2	Nut-Hex
12	125-5574	2	Pulley

Ref.	Part Number	Qty.	Description
13	32144-41	8	Screw-Taptite
14	26-0671	2	Screw-HH
15	3290-465	2	Washer-Belleville
16	106-2177	1	Spring-Extension
17	110-6568-03	2	Blade-21.6 Inch
18	88-5970	1	Hook-Return, Spring
19	121-0751	2	Spindle ASM
19:1	117-7267	1	Spindle
19:2	120-7935	2	Spacer
19:3	100-1048	2	Bearing-Ball
20	117-7268	2	Shaft-Spindle
21	106-2248-03	2	Stiffener-Blade

Attachments and Accessories

For 74616 TimeCutter SS 4216 Riding Mower

Product Name	Model/Part
42in Blowout Ring Kit	114-1620
Hourmeter Kit, 2011 and After TimeCutter Riding Mower	120-5498
Striping Kit	120-7905
Engine Guard Kit	79009
Foot Assist Deck Lift Kit, 2011 and After Zero-Turn-Radius Riding Mower	79010
Sunshade Kit	79011
Hitch Kit	79014
42in Recycler Kit, 2007 and After Riding Mower	79018
Floor Mat Kit, 2011 and After Zero-Turn-Radius Riding Mower w/ 32in or 42in Cutting Unit	79020
Cargo Carrier	79030
Front Weight Kit	79031
42in Replacement Blade Kit	79220
Storage Cover	79317
42in Bagger, 2011 and After TimeCutter 4000 Series Riding Mower	79334
10 cu. ft. Poly Dump Cart	79991

Notes:

Notes:

Notes:

TORO®

Count on it.