Form No. 3396-158 Rev A

TORO®

Count on it.

Operator's Manual

Workman® MD and MDX Utility Vehicle

Model No. 07266TC—Serial No. 315000601 and Up
Model No. 07273—Serial No. 315000601 and Up
Model No. 07273TC—Serial No. 315000601 and Up
Model No. 07279—Serial No. 315000601 and Up

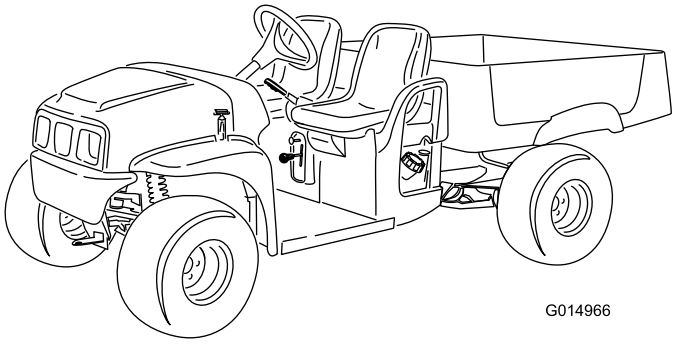

G014966

Register at www.Toro.com.
Original Instructions (EN)

CE

3396-158 A

This product complies with all relevant European directives. For details, please see the separate product specific Declaration of Conformity (DOC) sheet.

⚠ WARNING

CALIFORNIA
Proposition 65 Warning

This product contains a chemical or chemicals known to the State of California to cause cancer, birth defects, or reproductive harm.

The engine exhaust from this product contains chemicals known to the State of California to cause cancer, birth defects, or other reproductive harm.

Important: This engine is not equipped with a spark arrester muffler. It is a violation of California Public Resource Code Section 4442 to use or operate the engine on any forest-covered, brush-covered, or grass-covered land. Other states or federal areas may have similar laws.

This spark ignition system complies with Canadian ICES-002.

The enclosed *Engine Owner's Manual* is supplied for information regarding the US Environmental Protection Agency (EPA) and the California Emission Control Regulation of emission systems, maintenance, and warranty. Replacements may be ordered through the engine manufacturer.

Introduction

The machine is designed primarily as an off-road vehicle and is not intended for extensive use on public roads. When using the machine on public roads, follow all traffic regulations and use any additional accessories that may be required by law, such as lights, turn signals, slow moving vehicle (SMV) sign, and others as required.

This machine is a utility vehicle intended to be used by professional, hired operators in commercial applications. It is primarily designed for the transport of implements used in such applications. This vehicle allows for the safe transport of an operator and one passenger in the identified seats. The bed of this vehicle is not suitable for any riders.

Read this information carefully to learn how to operate and maintain your product properly and to avoid injury and product damage. You are responsible for operating the product properly and safely.

You may contact Toro directly at www.Toro.com for product and accessory information, help finding a dealer, or to register your product.

Whenever you need service, genuine Toro parts, or additional information, contact an Authorized Service Dealer or Toro Customer Service and have the model and serial numbers of your product ready. Figure 1 identifies the location of the model and serial numbers on the product. Write the numbers in the space provided.

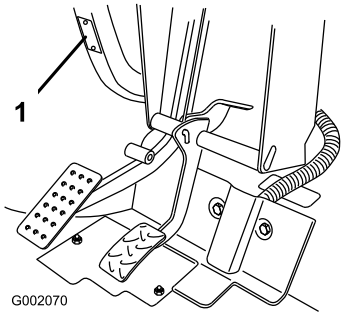

Figure 1

1. Model and serial number location

Model No. _____

Serial No. _____

This manual identifies potential hazards and has safety messages identified by the safety alert symbol (Figure 2), which signals a hazard that may cause serious injury or death if you do not follow the recommended precautions.



Figure 2

1. Safety alert symbol

This manual uses 2 words to highlight information. **Important** calls attention to special mechanical information and **Note** emphasizes general information worthy of special attention.

© 2015—The Toro® Company
8111 Lyndale Avenue South
Bloomington, MN 55420

Contact us at www.Toro.com.
Printed in the USA
All Rights Reserved

Contents

Safety 4
Safe Operating Practices 4
Before Operating 4
Supervisor's Responsibilities 4
Safe Handling of Fuels 5
Operation 5
Maintenance 7
Models 07266TC and 07279 8
Models 07273 and 07273TC 8
Safety and Instructional Decals 9
Setup 11
1 Installing the Steering Wheel (Models 07266TC and 07273TC) 11
2 Checking the Fluid Levels and Tire Air Pressure 12
3 Reading the Manual and Viewing the Safety Training Material 12
Product Overview 13
Controls 13
Specifications 16
Attachments/Accessories 16
Operation 17
Think Safety First 17
Operating the Cargo Box 17
Preforming Pre-Starting Checks 19
Checking the Brake Fluid Level 19
Checking the Engine-Oil Level 20
Checking the Tire Air Pressure 21
Adding Fuel 21
Starting the Engine 22
Stopping the Machine 23
Parking the Machine 23
Breaking in a New Machine 23
Loading the Cargo Box 23
Transporting the Machine 24
Towing the Machine 24
Towing a Trailer 24
Maintenance 26
Recommended Maintenance Schedule(s) 26
Daily Maintenance Checklist 27
Premaintenance Procedures 28
Maintaining the Machine under Special Operating Conditions 28
Preparing to Maintain the Machine 28
Lifting the Machine 28
Accessing the Hood 28
Lubrication 29
Greasing the Machine 29
Greasing the Front Wheel Bearings 30
Engine Maintenance 32
Servicing the Air Filter 32
Servicing the Engine Oil 34
Servicing the Spark Plug 36
Fuel System Maintenance 37
Inspecting Fuel Lines and Connections 37
Replacing the Fuel Filter 37
Servicing the Carbon Canister 37
Electrical System Maintenance 41
Servicing the Battery 41
Replacing the Fuses 42
Maintaining the Headlights 42
Drive System Maintenance 44
Maintaining the Tires 44
Adjusting the Front Wheel Toe-in and Camber 44
Checking the Transaxle Oil Level 46
Changing the Transaxle Oil 46
Checking and Adjusting Neutral 47
Maintaining the Primary-Drive Clutch 48
Cooling System Maintenance 48
Cleaning the Engine Cooling Areas 48
Brake Maintenance 49
Inspecting the Brakes 49
Adjusting the Parking-Brake Handle 49
Adjusting the Brake Cables 49
Changing the Brake Fluid 50
Belt Maintenance 50
Servicing the Drive Belt 50
Adjusting the Starter-Generator Belt 51
Chassis Maintenance 51
Adjusting the Cargo-Box Latches 51
Cleaning 52
Washing the Machine 52
Storage 52

Safety

Improper use or maintenance by the operator or owner can result in injury. To reduce the potential for injury, comply with these safety instructions and always pay attention to the safety alert symbol, which means **Caution**, **Warning**, or **Danger**—"personal safety instruction." Failure to comply with the instruction may result in personal injury or death.

The machine meets the requirements of SAE J2258.

Safe Operating Practices

⚠ WARNING

The machine is an off-highway vehicle only, and is not designed, equipped, or manufactured for use on public roads. Using it on a public road may result in an accident, which could seriously injure or kill you or others.

Do not use this machine on public roads.

The Workman was designed and tested to offer safe service when operated and maintained properly. Although hazard control and accident prevention partially are dependent upon the design and configuration of the machine, these factors are also dependent upon the awareness, concern, and proper training of the personnel involved in the operation, maintenance and storage of the machine. Improper use or maintenance of the machine can result in injury or death.

This is a specialized utility vehicle designed for off–road use only. Its ride and handling will have a different feel than what drivers experience with passenger cars or trucks. So take time to become familiar with your Workman.

Not all of the attachments that adapt to the Workman are covered in this manual. See the specific *Operator's Manual* provided with each attachment for additional safety instructions. **Read these manuals.**

To reduce the potential for injury or death, comply with the following safety instructions:

Before Operating

- Operate the machine only after reading and understanding the contents of this manual. A replacement manual is available by sending complete model and serial number to: The Toro® Company, 8111 Lyndale Avenue South, Minneapolis, Minnesota 55420.
- Never allow children to operate the machine. Anyone who operates the machine should have a motor vehicle license.
- Never allow other adults to operate the machine without first reading and understanding the *Operator's Manual*. Only trained and authorized persons should operate this machine. Make sure that all operators are physically and mentally capable of operating the machine.
- This machine is designed to carry **only you**, the operator, and **one passenger** in the seat provided by the manufacturer. **Never** carry any other passengers on the vehicle.
- Become familiar with the controls and know how to stop the engine quickly.
- **Never** operate the machine when under the influence of drugs or alcohol. Even prescription drugs and cold medicines can cause drowsiness.
- Do not drive the machine when you are tired. Be sure to take occasional breaks. It is very important that you stay alert at all times.
- Always wear substantial shoes. Do not operate the machine while wearing sandals, tennis shoes, or sneakers. Do not wear loose fitting clothing or jewelry which could get caught in moving parts and cause personal injury.
- Wearing safety glasses, safety shoes, long pants, and a helmet is advisable and required by some local safety and insurance regulations.
- **Never** allow children to operate the machine. **Never** allow adults to operate it without proper instructions. Only trained and authorized persons should operate this machine. Make sure all operators are physically and mentally capable of operating the machine.
- Keep everyone, especially children and pets, away from the areas of operation.
- Check the safety interlock system daily for proper operation. If a switch should malfunction, replace the switch before operating machine.
- Keep all shields, safety devices and decals in place. If a shield, safety device or decal is malfunctioning, illegible, or damaged, repair or replace it before operating the machine.
- Avoid driving when it is dark, especially in unfamiliar areas. If you must drive when it is dark, be sure to drive cautiously, use the headlights, and even consider adding additional lights.
- Before operating the vehicle, always check all parts of the vehicle and any attachments. If something is wrong, **stop using vehicle**. Make sure the problem is corrected before vehicle or attachment is operated again.
- Operate the machine only outdoors or in a well ventilated area.

Supervisor's Responsibilities

- Make sure operators are thoroughly trained and familiar with the *Operator's Manual* and all labels on the vehicle.
- Be sure to establish your own special procedures and work rules for unusual operating conditions (e.g. slopes too steep for the safe operation of the machine).

Safe Handling of Fuels

- To avoid personal injury or property damage, use extreme care in handling gasoline. Gasoline is extremely flammable and the vapors are explosive.
- Extinguish all cigarettes, cigars, pipes, and other sources of ignition.
- Use only an approved nonmetal, portable fuel container.
- Static electric discharge can ignite fuel vapors in a fuel container that is not grounded. Never fill containers inside a vehicle or on a truck or trailer bed with a plastic liner. Remove the fuel container from the bed of the machine and place it on the ground and away from the vehicle before filling.
- Keep the nozzle in contact with the container while filling the fuel container. Remove equipment from bed of the machine before fueling it. Do not use a nozzle lock open device.
- Never remove fuel cap or add fuel with the engine running.
- Allow engine to cool before refueling.
- Never refuel the machine indoors.
- Never store the machine or fuel container where there is an open flame, spark, or pilot light such as on a water heater or on other appliances.
- Remove equipment from the truck or trailer and refuel it on the ground. If this is not possible, then refuel such equipment with a portable container, rather than from a fuel dispenser nozzle.
- If fuel is spilled on clothing, change clothing immediately.
- Never overfill fuel tank. Replace fuel cap and tighten securely.

Operation

- The operator and passenger should remain seated and use the seat belts whenever the vehicle is in motion. The operator should keep both hands on the steering wheel, whenever possible, and the passenger should use the hand holds provided. Keep arms and legs within the vehicle body at all times.
- Drive slower and turn less sharply when you are carrying a passenger. Remember your passenger may not be expecting you to brake or turn and may not be ready. Never carry passengers in the box or on attachments.
- Never overload your vehicle. The name plate (located under the middle of the dash) shows the load limits for the vehicle. Never overfill attachments or exceed the vehicle maximum gross vehicle weight (GVW).
- When starting the engine:
  - Sit on operator's seat and ensure that the parking brake is engaged.
  - Keep your foot on the brake.
  - Rotate the On/Off switch to the On position.

    Note: The engine will start when you push in the accelerator pedal.
- Using the machine demands attention. Failure to operate machine safely may result in an accident, tip over of the machine, and serious injury or death. Drive carefully. To prevent tipping or loss of control, take the following precautions:
  - Use extreme caution, reduce speed, and maintain a safe distance around sand traps, ditches, creeks, ramps, any unfamiliar areas, or other hazards.
  - Watch for holes or other hidden hazards.
  - Use caution when operating the vehicle on a steep slope. Normally, travel straight up and down slopes. Reduce speed when making sharp turns or when turning on hillsides. Avoid turning on hillsides whenever possible.
  - Use extra caution when operating the machine on wet surfaces, at higher speeds, or with a full load. Stopping time will increase with a full load.
  - When loading the bed, distribute the load evenly. Use extra caution if the load exceeds the dimensions of the vehicle/bed. Operate the machine with extra caution when handling off-center loads that cannot be centered. Keep loads balanced and secure to prevent them from shifting.
  - Avoid sudden stops and starts. Do not go from reverse to forward or forward to reverse without first coming to a complete stop.
  - Do not attempt sharp turns or abrupt maneuvers or other unsafe driving actions that may cause a loss of control of the machine.
  - Do not pass another machine traveling in the same direction at intersections, blind spots, or at other dangerous locations.
  - When dumping, do not let anyone stand behind machine and do not dump the load on anyone's feet. Release the tailgate latches from the side of box, not from behind.
  - Keep all bystanders away. Before backing up, look to the rear and ensure that no one is behind the vehicle. Back up slowly.
  - Watch out for traffic when near or crossing roads. Always yield the right of way to pedestrians and other vehicles. Always signal your turns or stop early enough so other persons know what you plan to do. Obey all traffic rules and regulations.
  - Never operate the machine in or near an area where there is dust or fumes in the air which are explosive. The electrical and exhaust systems of the machine can produce sparks capable of igniting explosive materials.
  - Always watch out for and avoid low overhangs such as tree limbs, door jambs, over head walkways, etc. Make sure there is enough room over head to easily clear the machine and your head.

  - If you are ever unsure about the safe operation of the machine, **stop your work** and ask your supervisor.
- Before getting off the seat:
  - Stop movement of the machine.
  - Lower bed.
  - Shut engine off and wait for all movement to stop.
  - Set parking brake.
  - Remove key from On/Off switch.
- Do not touch engine, transmission, radiator, muffler or muffler manifold while engine is running or soon after it has stopped because these areas may be hot enough to cause burns.
- If the machine ever vibrates abnormally, stop the machine immediately, turn engine off, wait for all motion to stop and inspect for damage. Repair all damage before resuming operation.
- Lightning can cause severe injury or death. If lightning is seen or thunder is heard in the area, do not operate the machine; seek shelter.

Braking

- Slow down before you approach an obstacle. This gives you extra time to stop or turn away. Hitting an obstacle can injure you and your passenger. In addition, it can damage the machine and its contents.
- Gross vehicle weight (GVW) has a major impact on your ability to stop and/or turn. Heavy loads and attachments make the machine harder to stop or turn. The heavier the load, the longer it takes to stop. Refer to Loading the Cargo Box (page 23) for more information.
- Decrease the speed of the machine if the cargo box has been removed and there is no attachment installed on the machine. The braking characteristics change and fast stops may cause the rear wheels to lock up, which will affect the control of the machine.
- Turf and pavement are much more slippery when they are wet. It can take 2 to 4 times longer to stop the machine on wet surfaces as on dry surfaces. If you drive through deep-standing water and get the brakes wet, they will not work well until they are dry. After driving through water, you should test the brakes to make sure they work properly. If they do not, drive slowly on a level ground while putting light pressure on the brake pedal. This will dry the brakes out.

Operating on Hills

⚠ WARNING

Operating the machine on a hill may cause tipping or rolling of the machine, or the engine may stall and you could lose headway on the hill. This could result in personal injury.

- **Do not operate machine on excessively steep slopes.**
- **Do not accelerate quickly or slam on the brakes when backing down a hill, especially with a load.**
- **If the engine stalls or you lose headway on a hill, slowly back straight down the hill. Never attempt to turn the machine around.**
- **Operate the machine slowly on a hill and use caution.**
- **Avoid turning on a hill.**
- **Reduce your load and the speed of the machine.**
- **Avoid stopping on hills, especially with a load.**

These extra cautions need to be taken when operating the machine on a hill:

- Slow the machine down before starting up or down a hill.
- If the engine stalls or you begin to lose momentum while climbing a hill, gradually apply the brakes and slowly back the machine straight down the hill.
- Turning while traveling up or down hills can be dangerous. If you have to turn while on a hill, do it slowly and cautiously. Never make sharp or fast turns.
- Heavy loads affect stability. Reduce the weight of the load and your ground speed when operating on hills or if the load has a high center of gravity. Secure the load to the cargo box of the machine to prevent the load from shifting. Take extra care when hauling loads that shift easily (liquid, rock, sand, etc.).
- Avoid stopping on hills, especially with a load. Stopping while going down a hill will take longer than stopping on level ground. If the machine must be stopped, avoid sudden speed changes, which may initiate tipping or rolling of the machine. Do not slam on the brakes when rolling backward, as this may cause the machine to overturn.
- If you will be using the machine on hilly terrain, you can install the optional ROPS Kit.

Operating on Rough Terrain

⚠ WARNING

Sudden changes in terrain may cause abrupt steering wheel movement, possibly resulting in hand and arm injuries.

- **Reduce your speed when operating on rough terrain and near curbs.**
- **Grip the steering wheel loosely around the perimeter keeping thumbs up and out of the way of the steering wheel spokes.**

Reduce the ground speed of the machine and load carried in the machine when operating on rough terrain, uneven ground, and near curbs, holes, and other sudden changes in terrain. Loads may shift, causing the machine to become unstable.

If you will be using the machine on rough terrain, you can install the optional ROPS Kit.

Loading and Dumping

⚠ WARNING

The weight of the box may be heavy. Hands or other body parts could be crushed.

- **Keep hands and other body parts clear when lowering the box.**
- **Do not dump materials on bystanders.**

- Do not exceed the rated weight capacity of the machine when operating it with a load in the cargo box, when towing a trailer, or both; refer to Specifications (page 16).
- Use caution when operating the machine on a hillside or on rough terrain, particularly with a load in the cargo box or when towing a trailer or both.
- Use caution when carrying tall loads in the cargo box.
- Be aware that the stability and control of the machine are reduced when the load in the cargo box is poorly distributed.
- Carrying oversized loads in the cargo box changes the stability of the machine.
- The steering, braking , and stability of the machine are affected when carrying a load where the weight of the material cannot be bound to the machine such as the liquid in a large tank.
- Never dump a loaded cargo box while the machine is sideways on a hill. The change in weight distribution may cause the machine to overturn.
- When operating with a heavy load in the cargo box, reduce your speed and allow for sufficient braking distance. Do not suddenly apply the brakes. Use extra caution on slopes.
- Be aware that heavy loads increase your stopping distance and reduce your ability to turn quickly without tipping over.
- The rear cargo space is intended for load carrying purposes only, not for passengers.
- Never overload your machine. The name plate (located under the middle of the dash) shows the load limits for the machine. Never overfill attachments or exceed the machine maximum gross machine weight (GVW); refer to Loading the Cargo Box (page 23).

Maintenance

- Before servicing or making adjustments to the machine, move the machine to a level surface, stop the engine, set the parking brake, and remove the key from On/Off switch to prevent accidental starting of the engine.
- Never work under a raised bed without placing the bed-safety support onto the fully extended bed-actuator rod.
- Make sure all hydraulic fittings are tight, and all hydraulic hoses and lines are in good condition before applying pressure to the system.
- Keep your body and hands away from pin hole leaks or nozzles that eject hydraulic fluid under high pressure. Use paper or cardboard, **not your hands**, to search for leaks. Hydraulic fluid escaping under pressure can have sufficient force to penetrate skin and cause serious damage to your body. If fluid is injected into the skin, it must be surgically removed within a few hours by a doctor familiar with this form of injury, or gangrene may result.
- Before disconnecting or performing any work on the hydraulic system, all pressure in the hydraulic system must be relieved by stopping the engine and cycling the hydraulic control valve for the bed lift from raise to lower and/or lowering box and attachments. If equipped, place the remote-hydraulics lever in the float position. If the box must be in raised position, secure it with the bed-safety support.
- To make sure the entire machine is in good condition, keep all nuts, bolts, and screws properly tightened.
- To reduce the potential fire hazard, keep the engine area free of excessive grease, grass, leaves, and accumulation of dirt.
- If the engine must be running to perform a maintenance adjustment, keep hands, feet, clothing, and any parts of the body away from the engine and any moving parts. Keep everyone away.
- Do not overspeed the engine by changing the governor settings. The maximum engine speed is 3650 rpm. To ensure safety and accuracy, have an Authorized Toro Distributor check the maximum engine speed with a tachometer.

- If major repairs are ever needed or assistance is required, contact an Authorized Toro Distributor.
- To be sure of optimum performance and safety, always purchase genuine Toro replacement parts and accessories. Replacement parts and accessories made by other manufacturers could be dangerous. Altering this machine in any manner may affect the operation, performance, durability of the machine, or its use may result in injury or death. Such use could void the product warranty of The Toro® Company.
- This machine should not be modified without authorization from The Toro® Company. Direct any inquiries to The Toro® Company, Commercial Division, Vehicle Engineering Dept., 8111 Lyndale Ave. So., Bloomington, Minnesota 55420–1196 USA.

Models 07266TC and 07279

Sound Power

This unit has a guaranteed sound power level of 96 dBA, which includes an Uncertainty Value (K) of 1 dBA.

Sound power level was determined according to the procedures outlined in EN ISO 11094.

Sound Pressure

This unit has a sound pressure level at the operator's ear of 83 dBA, which includes an Uncertainty Value (K) of 1 dBA.

Sound pressure level was determined according to the procedures outlined in EN ISO 11201.

Hand-Arm Vibration

Measured vibration level for right hand = 1.03 m/s^2

Measured vibration level for left hand = 1.5 m/s^2

Uncertainty Value (K) = 0.5 m/s^2

Measured values were determined according to the procedures outlined in EN 1032.

Whole Body Vibration

Measured vibration level = 0.42 m/s^2

Uncertainty Value (K) = 0.5 m/s^2

Measured values were determined according to the procedures outlined in EN 1032.

Models 07273 and 07273TC

Sound Power

This unit has a guaranteed sound power level of 96 dBA, which includes an Uncertainty Value (K) of 1 dBA.

Sound power level was determined according to the procedures outlined in EN ISO 11094.

Sound Pressure

This unit has a sound pressure level at the operator's ear of 86 dBA, which includes an Uncertainty Value (K) of 1 dBA.

Sound pressure level was determined according to the procedures outlined in EN ISO 11201.

Hand-Arm Vibration

Measured vibration level for right hand = 1.03 m/s^2

Measured vibration level for left hand = 1.5 m/s^2

Uncertainty Value (K) = 0.5 m/s^2

Measured values were determined according to the procedures outlined in EN 1032.

Whole Body Vibration

Measured vibration level = 0.42 m/s^2

Uncertainty Value (K) = 0.5 m/s^2

Measured values were determined according to the procedures outlined in EN 1032.

Safety and Instructional Decals

Safety decals and instructions are easily visible to the operator and are located near any area of potential danger. Replace any decal that is damaged or lost.

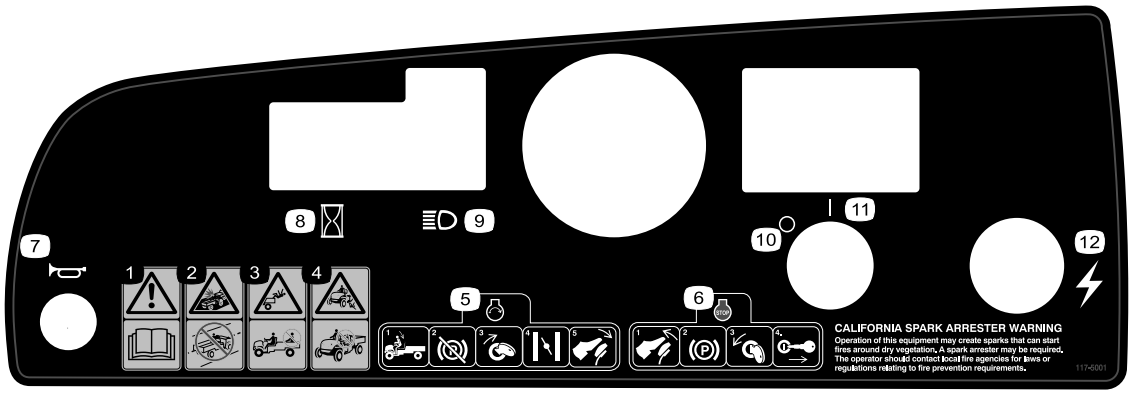

117-5001

1. Warning—read the *Operator's Manual*.
2. Collision hazard—do not operate the vehicle on public streets, roads, or highways.
3. Falling hazard—do not carry passengers in the cargo bed.
4. Falling hazard—do not allow children to operate the vehicle.
5. To start the motor, sit on the operator's seat, release the parking brake, turn the power key on, pull the choke lever out (if needed), and press the accelerator pedal.
6. To stop the engine, release the accelerator pedal, set the parking brake, turn the power key off, and remove the power key.
7. Horn
8. Hour meter
9. Headlights
10. Power—Off
11. Power—On
12. Electrical power (power point)



104-6581

1. Warning—read the *Operator's Manual*.
2. Fire hazard—before fueling, stop the engine.
3. Warning—do not operate this machine unless you are trained.
4. Tipping hazard—use caution and drive slowly while on slopes; drive slowly when turning, keep the vehicle speed under 26 km/h (16 mph) when carrying a full or heavy load and when driving on rough terrain.
5. Falling and arm/leg injury hazards—do not carry passengers in the cargo bed and keep arms and legs inside of the vehicle at all times.

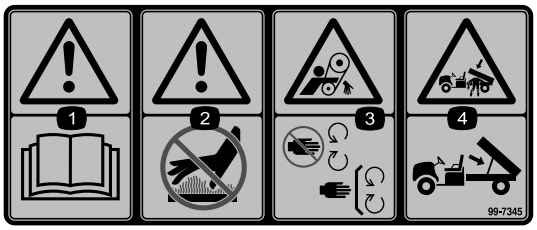

99-7345

1. Warning—read the *Operator's Manual*.
2. Hot surface/burn hazard—stay a safe distance from the hot surface.
3. Entanglement hazard, belt—stay away from moving parts; keep all guards in place.
4. Crushing hazard, cargo box—use the prop rod to support the cargo bed

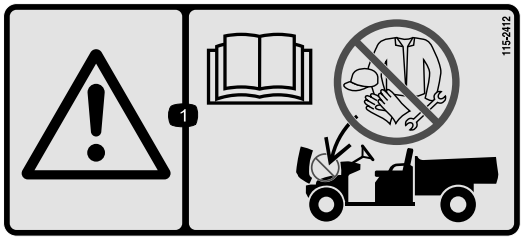

115-2412

1. Warning—read the *Operator's Manual*; no storage.

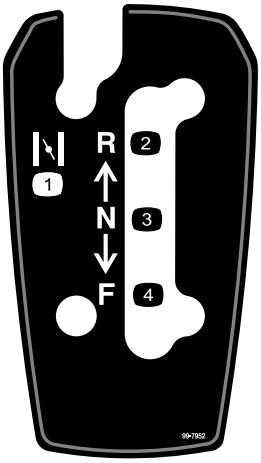

99-7952

1. Choke
2. Reverse
3. Neutral
4. Forward

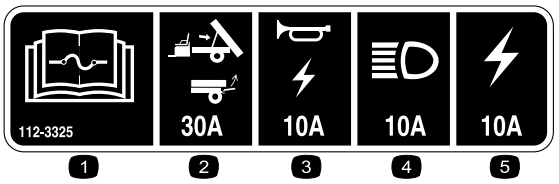

112-3325

1. Read the *Operator's Manual* for fuse information.
2. Lift/gate, 30A
3. Horn/power point, 10A
4. Headlights, 15A
5. Machine fuse, 20A

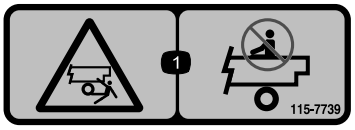

115-7739

1. Falling, crushing hazard, bystanders—no riders on machine.

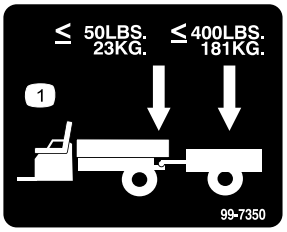

99-7350

1. Maximum tongue weight is 23 kg (50 lb); maximum trailer weight is 181 kg (400 lb).

Setup

Loose Parts

Use the chart below to verify that all parts have been shipped.

Procedure	Description	Qty.	Use
1	Steering wheel	1	Install the steering wheel (Models 07266TC and 07273TC).
2	No parts required	–	Check the fluid levels and tire air pressure.
3	Operator's Manual Engine owner's manual Parts Catalog Safety training material Registration Card Predelivery Inspection Form Certificate of Quality Key	1 1 1 1 1 1 1 2	Read the Operator's Manual and view the training material before operating the machine.

Note: Determine the left and right sides of the machine from the normal operating position.

1

Installing the Steering Wheel (Models 07266TC and 07273TC)

Parts needed for this procedure:

1	Steering wheel

Procedure

1. Through the openings in the back of the steering wheel, release the lock tabs of the center cover and remove the cover from the wheel (Figure 3).

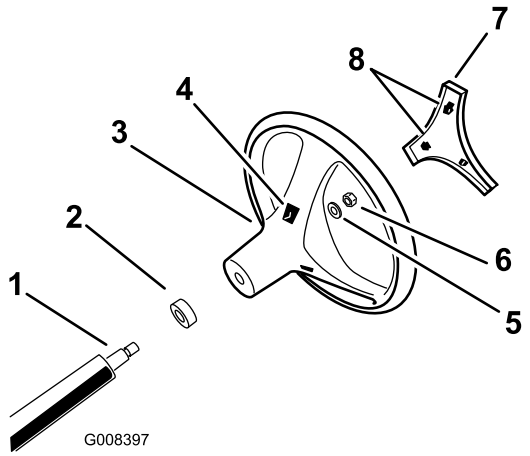

Figure 3

1. Steering shaft
2. Dust cover
3. Steering wheel
4. Tab slots in wheel
5. Washer
6. Locknut
7. Center cover
8. Opening (for access to the steering wheel tabs)

2. Remove the locknut and washer from the steering shaft (Figure 3).
3. Align the steering wheel onto the splines of the steering shaft (Figure 3).

   Note: Position the steering wheel on the shaft so that when the tires of the machine are pointed straight ahead, the cross beam of the steering wheel is horizontal and the thicker spoke of the steering wheel is pointing down.
4. Assemble the washer and locknut threads of the steering shaft (Figure 3).
5. Torque the locknut to 24-29 N-m (18-22 ft-lb).

6. Align the lock tabs of the center cover to the openings in the steering wheel and press the cover into the wheel until the locks tabs snap into place (Figure 3).

2

Checking the Fluid Levels and Tire Air Pressure

No Parts Required

Procedure

1. Check the engine oil level before and after the engine is first operated; refer to Checking the Engine-Oil Level (page 20).
2. Check the brake fluid level before the engine is first operated; refer to Checking the Brake Fluid Level (page 19).
3. Check the transaxle-fluid level before the engine is first operated; refer to Checking the Transaxle Oil Level (page 46).
4. Check the air pressure in the tires; refer to Checking the Tire Air Pressure (page 21)

3

Reading the Manual and Viewing the Safety Training Material

Parts needed for this procedure:

1	*Operator's Manual*
1	Engine owner's manual
1	*Parts Catalog*
1	Safety training material
1	Registration Card
1	*Predelivery Inspection Form*
1	Certificate of Quality
2	Key

Procedure

- Read the *Operator's Manual* and Engine owners's manual.
- View the safety training material.
- Fill out the registration card.
- Complete the *Predelivery Inspection Form*.
- Review the *Certificate of Quality*.

Product Overview

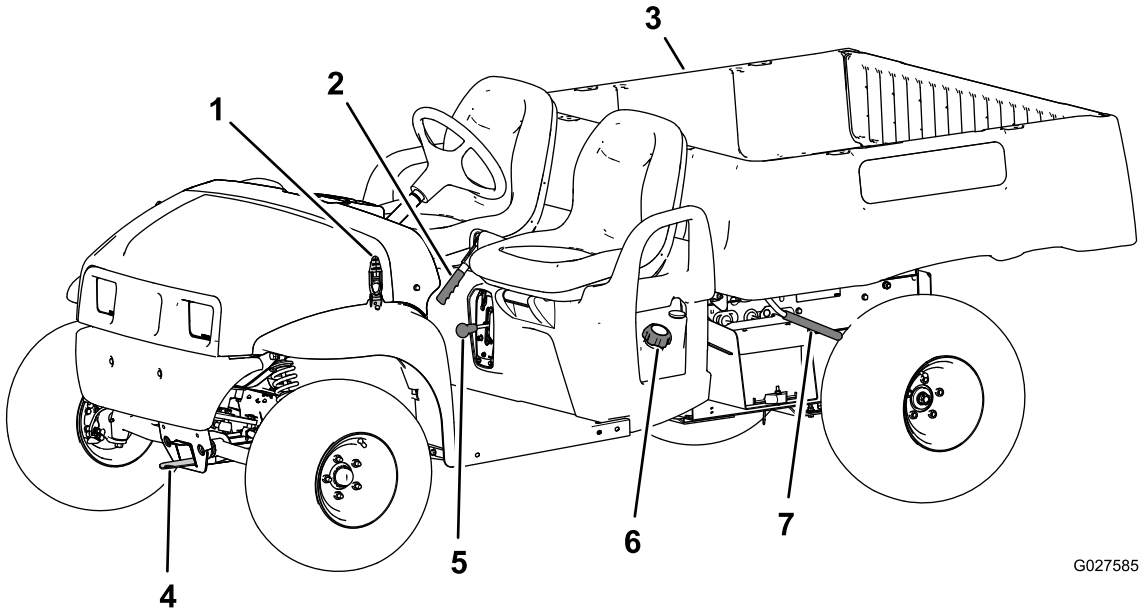

Figure 4

1. Hood latch
2. Parking brake handle
3. Cargo box
4. Towing tongue
5. Gear shift selector
6. Fuel cap
7. Cargo box lever

Controls

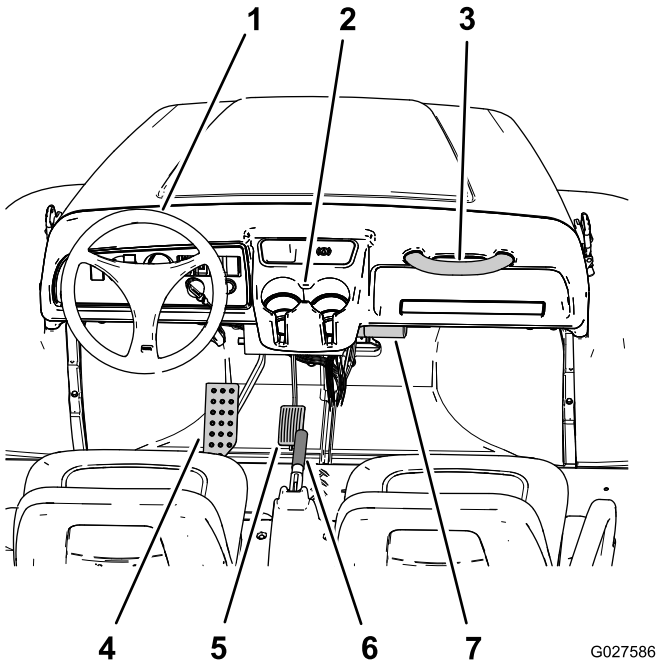

Figure 5

1. Steering wheel
2. Cup holder
3. Passenger handhold
4. Brake pedal
5. Accelerator pedal
6. Parking brake handle (center console)
7. *Operator's Manual* storage tube

Accelerator Pedal

Use the accelerator pedal (Figure 5) to vary ground speed of the machine. Pressing down the accelerator pedal starts the engine. Pressing the pedal farther increases ground speed. Releasing the pedal will slow the machine, and the engine will stop running.

Note: The maximum forward speed is 26 km/h (16 mph).

Brake Pedal

Use the brake pedal to stop or slow the machine (Figure 5).

⚠ CAUTION

Operating a machine with worn or incorrectly adjusted brakes can may result in personal injury.

If brake pedal travels to within 25 mm (1 inch) of the vehicle floor board, the brakes must be adjusted or repaired.

Parking Brake Lever

The parking brake lever is located between the seats (Figure 4 and Figure 5). Whenever the engine is shut off, set the parking brake to prevent the machine from accidental moving. To set the parking brake, pull up on the parking brake lever. To release the parking brake, push the lever down. If the machine is parked on a steep grade, make sure that the parking brake is set.

Choke Control

The choke control is located below and to the right of the operator's seat. Use the choke to help start a cold engine by pulling the choke control outward (Figure 6). After the engine starts, adjust the choke to keep the engine running smoothly. As the engine warms up, push in the choke control to the Off position.

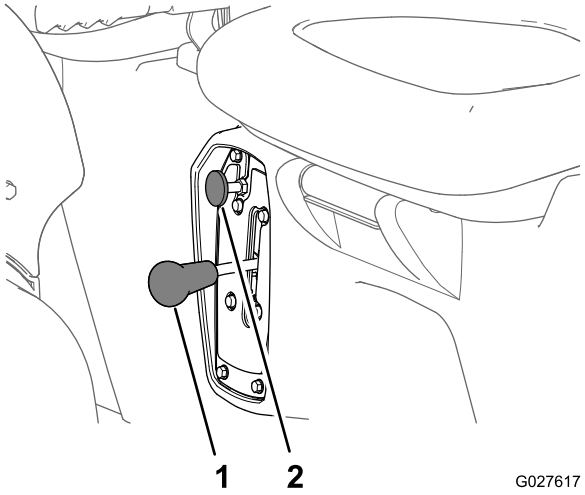

Figure 6

1. Choke control
2. Gear-shift selector

Gear-shift Selector

The gear shift selector is located between the seats and below the parking brake lever. The gear shift selector has three positions: Forward, Reverse, and Neutral (Figure 6).

Note: The engine will start and run in any of the three positions.

Important: Always stop the vehicle before changing gears.

Horn Button (Models 07266TC and 07273TC)

The horn button is located at the lower left corner of the dash panel (Figure 7). Press the horn button to sound the horn.

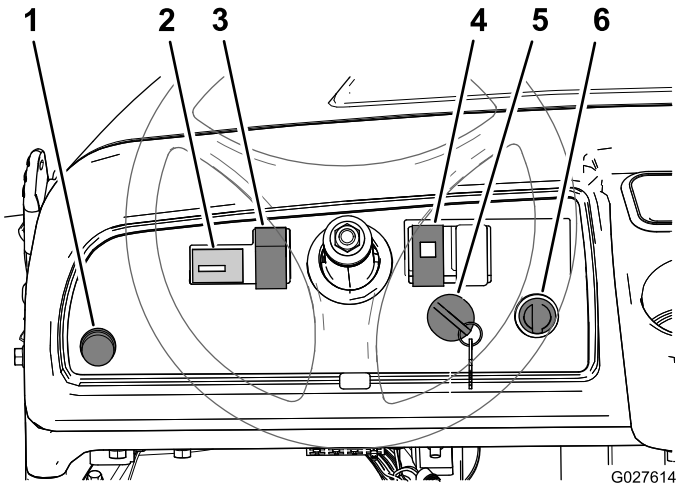

Figure 7

1. Horn Button (Models 07266TC and 07273TC)
2. Hour meter
3. Light switch
4. Oil light
5. Power point
6. On/Off switch

Light Switch

The light switch is located to the left of the steering column (Figure 7). Use the light switch to illuminate the headlights. Push up the light switch turn on the headlights or push down the switch to turn off the lights.

Hour Meter

The hour meter is located to the left of the light switch (Figure 7). Use the hour meter to find out the total number of hours the engine has run. The hour meter starts to function whenever you turn the key switch to the On position or if the engine is running.

Engine Oil Pressure Light

The engine oil pressure light is located to the right of the steering column (Figure 7). The oil light warns the operator if the engine oil pressure drops below a safe level to operate the engine. If the light comes on and remains lit, shut off the engine and check the engine oil level. Add oil to the engine if necessary; refer to Checking the Engine-Oil Level (page 20).

Note: The oil light may flicker, this is normal and no action needs to be taken.

On/Off Switch

The On/Off switch (Figure 7), is used to run and stop the engine, and has two positions: On and Off. Rotate the key clockwise to the On position to run the engine to operate the machine. When the machine is stopped, rotate the key counterclockwise to the Off position to shut off the engine. Remove the key from the On/Off switch when you leave the machine.

Power Point

The power point is located to the right of the On/Off switch (Figure 7).Use the power point to power 12 volt optional electrical accessories.

Fuel Gauge

The fuel gauge (Figure 8) is located on the fuel tank next to the filler cap, at the left side of the machine. The gauge displays the amount of fuel in the tank.

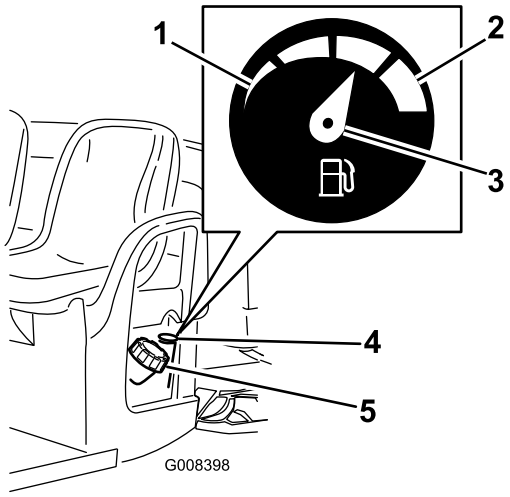

Figure 8

1. Empty
2. Full
3. Needle
4. Fuel gauge
5. Fuel-tank cap

Passenger Hand Holds

The passenger hand holds are located on the right side of the dash panel and at the outside of each seat (Figure 9).

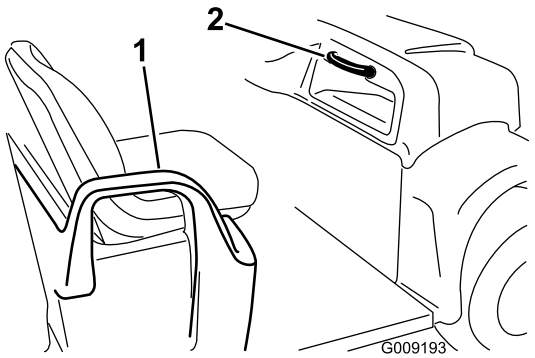

Figure 9

1. Hand hold—hip restraint
2. Passenger hand hold

Specifications

Note: Specifications and design are subject to change without notice.

Type	Model: 07266TC and 07279	Model: 07273 and 07273TC
Base weight	Dry 544 kg (1200 lb)	
Rated capacity (on level ground)	567 kg (1250 lb) total, including 90.7 kg (200 lb) operator and 90.7 kg (200 lb) passenger, load, trailer tongue weight, gross trailer weight, accessories, and attachments	749 kg (1650 lb) total, including 90.7 kg (200 lb) operator and 90.7 kg (200 lb) passenger, load, trailer tongue weight, gross trailer weight, accessories, and attachments
Maximum gross vehicle weight (GVW) (on level ground)	1111 kg (2450 lb) total, including all of the weights listed above	1292 kg (2850 lb) total, including all of the weights listed above
Maximum cargo capacity (on level ground)	385 kg (850 lb) total, including trailer tongue weight and gross trailer weight	567 kg (1250 lb) total, including trailer tongue weight and gross trailer weight
Tow capacity: Standard Hitch Heavy Duty Hitch	 Tongue weight 23 kg (50 lb) Maximum trailer weight 182 kg (400 lb) Tongue weight 45 kg (100 lb) Maximum trailer weight 363 kg (800 lb)	
Overall width	150 cm (59 inch)	
Overall length	299 cm (117.75 inch)	
Ground clearance	25 cm (10 inch) at the front with no load or operator, 18 cm (7 inch) at the rear with no load or operator	
Wheel base	206 cm (81 inch)	
Wheel tread (center line to center line)	125 cm (49 inch) in the front, 118 cm (46-1/2 inch) in the rear	125 cm (49 inch) in the front, 120 cm (47-1/4 inch) in the rear
Cargo box length	117 cm (46 inch) inside, 133 cm (52-1/4 inch) outside	
Cargo box width	125 cm (49 inch) inside, 150 cm (59 inch) at outside of the molded fenders	
Cargo box height	25 cm (10 inch) inside	

Attachments/Accessories

A selection of Toro approved attachments and accessories is available for use with the machine to enhance and expand its capabilities. Contact your Authorized Service Dealer or Distributor or go to www.Toro.com for a list of all approved attachments and accessories.

Operation

Note: Determine the left and right sides of the machine from the normal operating position.

Think Safety First

Carefully read all safety instructions and symbols in the safety section. Knowing this information could help you or bystanders avoid injury.

⚠ DANGER

Operating on wet grass or steep slopes can cause sliding and loss of control.

Wheels dropping over edges can cause rollovers, which may result in serious injury, death, or drowning.

To avoid loss of control and possibility of rollover:

- **Do not operate near drop-offs or near water.**
- **Reduce speed and use extreme caution on slopes.**
- **Avoid sudden turns or rapid speed changes.**

⚠ CAUTION

This machine produces sound levels that can cause hearing loss through extended periods of exposure.

Wear hearing protection when operating this machine.

The use of protective equipment for eyes, ears, hands, feet, and head is recommended.

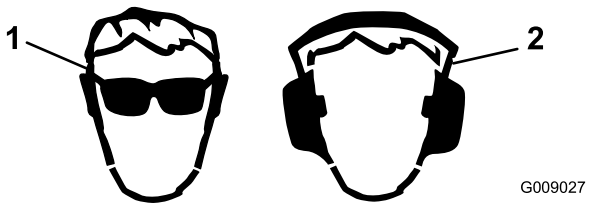

Figure 10

1. Wear safety glasses.
2. Wear hearing protection.

Operating the Cargo Box

Raising the Cargo Box

⚠ WARNING

A raised box could fall and injure persons that are working beneath it.

- **Always use the prop rod to hold the box up before working under the box.**
- **Remove any load material from the box before raising it.**

⚠ WARNING

Driving the machine with the cargo box raised may cause the machine to tip or roll easier. The box structure may become damaged if you operate the machine with the box raised.

- **Only operate the machine when the cargo box is down.**
- **After emptying the cargo box, lower it.**

⚠ CAUTION

If a load is concentrated near the back of the cargo box when you release the latches, the box may unexpectedly tip open injuring you or bystanders.

- **Center loads in the cargo box if possible.**
- **Hold the cargo box down and ensure that no one is leaning over the box or standing behind it when releasing the latches.**
- **Remove all cargo from the box before lifting the box up to service the machine.**

1. Lift the lever on either side of the box and lift the box up (Figure 11).

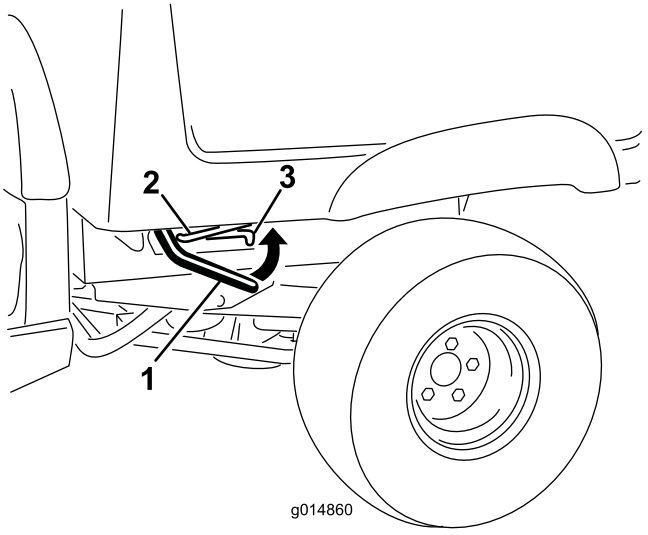

Figure 11

1. Lever
2. Prop rod
3. Detent slot

2. Pull the prop rod into the detent slot, securing the box (Figure 12).

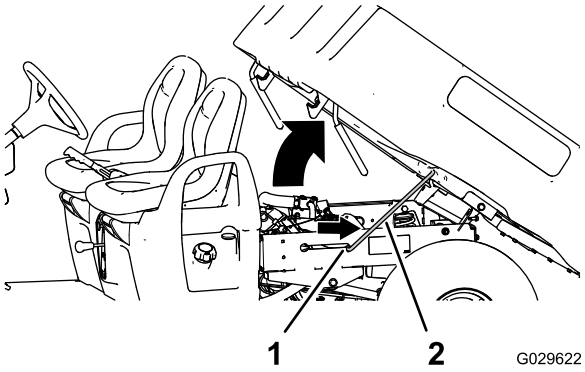

Figure 12

1. Detent slot
2. Prop rod

Lowering the Cargo Box

⚠ WARNING

The weight of the box may be heavy. Hands or other body parts could be crushed.

Keep hands and other body parts clear when lowering the box.

1. Raise the cargo box slightly by lifting up on the latch lever (Figure 11).
2. Pull the prop rod out of the detent slot (Figure 12).
3. Lower the box until it latches into securely (Figure 11).

Opening the Tailgate

1. Ensure that the cargo box is down and latched.
2. Lift up on the finger pulls at the back panel of the tail gate (Figure 13).

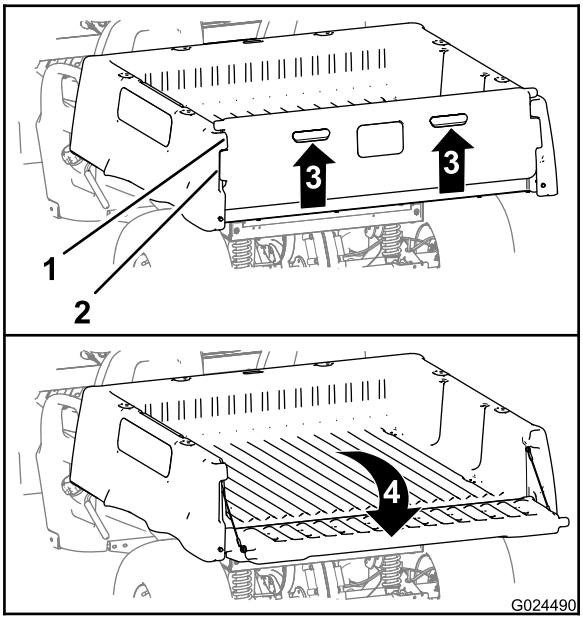

Figure 13

1. Tailgate flange (cargo box)
2. Lock flange (tailgate)
3. Lift up (finger pull)
4. Rotate rearward and down

3. Align the lock flanges of the tailgate with the openings between the tailgate flanges of the cargo box (Figure 13).
4. Rotate the tail gate rearward and down (Figure 13).

Closing the Tailgate

If you unloaded loose material such as sand, landscaping rock, or wood chips from the cargo box of the machine, some the material that you unloaded may have lodged in the hinge area of the tailgate. Perform the following before closing the tailgate.

1. Use your hands to remove as much of the material from the hinge area as possible.
2. Rotate the tailgate to approximately 45° position (Figure 14).

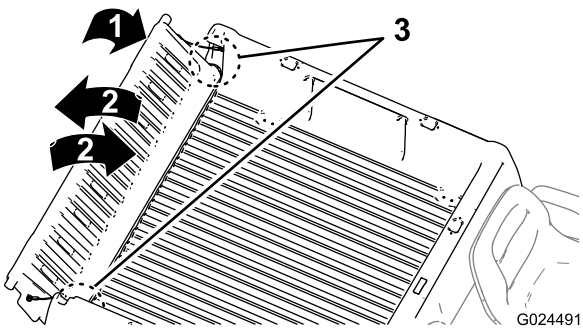

Figure 14

3. Use a short, shaking motion to rotate the tailgate back and forth several times (Figure 14).

   Note: This action will help move material away from the hinge area

4. Lower the tailgate and check for material remaining in the hinge area.

5. Repeat steps 1 through 4 until the material is removed from the hinge area.

6. Rotate the tailgate up and forward until the lock flanges of the tailgate are flush with the tailgate pocket in the cargo box (Figure 13).

   Note: Raise or lower the tailgate in order to align the lock flanges of the tailgate with the vertical openings between the tailgate flanges of the cargo box.

7. Lower the tailgate until it is seated in the back of the cargo box (Figure 13).

   Note: The lock flanges of the tailgate will be fully secured by the tailgate flanges of the cargo box.

Preforming Pre-Starting Checks

Service Interval: Before each use or daily Check the following items each time you begin using the machine for the day:

- Check brake fluid levels, and add the specified brake fluids as needed; refer to Checking the Brake Fluid Level (page 19).
- Check engine oil, and add the specified oil as needed; refer to Checking the Engine-Oil Level (Models 07273 and 07273TC) (page 21).
- Check the air pressure in the tires; refer to Checking the Tire Air Pressure (page 21).
- Check the brake pedal operation.
- Check to see that the lights are working.
- Turn the steering wheel to the left and right to check steering response.
- Check for oil leaks, loose parts, and any other noticeable malfunctions.

  Note: Shut off the engine and allow all moving parts to stop before checking for oil leaks, loose parts, and other wear and damage.

If any of the above items are not correct, notify your mechanic or check with your supervisor before taking the machine out for the day. Your supervisor may want you to check other items on a daily basis, so ask him or her about additional operator's responsibilities.

Checking the Brake Fluid Level

Service Interval: Before each use or daily Check the brake-fluid level before the motor is first used.

Brake Fluid Type: DOT 3

1. Park the machine on a level surface, set the parking brake, rotate the On/Off switch to the Off position, and remove the key..

2. Remove the rubber plug in the center and on top of the dash to gain access to the master brake cylinder and reservoir (Figure 15).

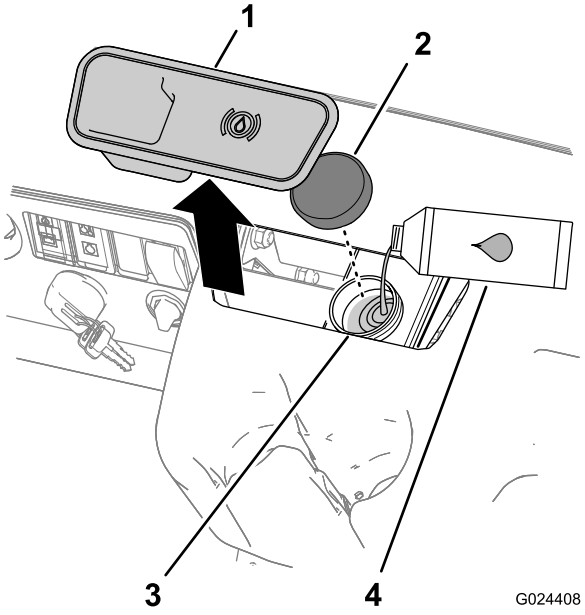

Figure 15

1. Rubber plug
2. Reservoir cap
3. Filler neck (reservoir)
4. DOT 3 brake fluid

3. Look at the outline of the fluid level at the side of the reservoir. (Figure 16).

   Note: The level should be above the Minimum line

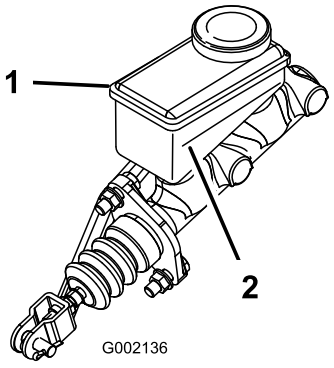

Figure 16

1. Brake-fluid reservoir
2. Minimum line

4. If the fluid level is low, preform the following:
   A. Clean the area around the reservoir cap, and remove the cap (Figure 15).
   B. Add DOT 3 brake fluid to the reservoir until the fluid level is above the Minimum line (Figure 16).

      Note: Do not overfill the reservoir with brake fluid.

   C. Install the reservoir cap (Figure 15).
5. Install the rubber plug in top of the dash (Figure 16).

Checking the Engine-Oil Level

Service Interval: Before each use or daily Check the engine oil level before the engine is first started.

Checking the Engine-Oil Level (Models 07266TC and 07279)

Note: The machine is shipped with oil in the crankcase; however, check the oil before and after you start the engine.

Oil Type: Detergent oil (API service SJ or higher)

Viscosity: See the following table.

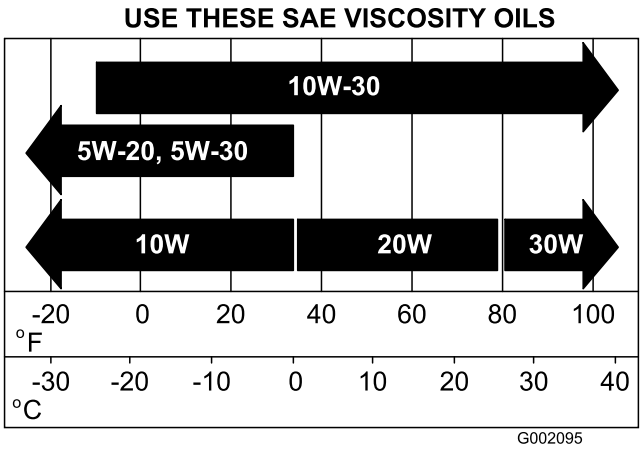

Figure 17

1. Move the machine to a level surface.
2. Raise the cargo box; refer to Raising the Cargo Box (page 17).
3. Use a rag to clean around the fill spout (Figure 18) so that dirt cannot fall into the spout and damage the engine.

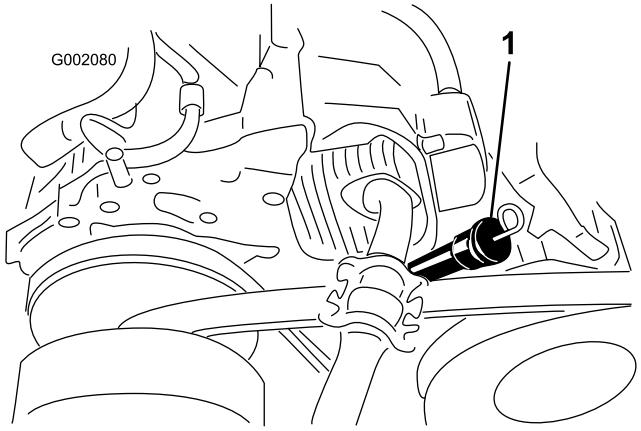

Figure 18

1. Oil dipstick and fill spout

4. Remove the oil dipstick and wipe the end clean (Figure 18).
5. Slide the oil dipstick into the fill spout fully seating it (Figure 18).
6. Pull the dipstick out and look at the end.
7. If the oil level is low, add the specified oil into the fill spout to raise the oil level up to Full mark on the dipstick.

   Note: Add the oil slowly and check the oil level often during this process. **Do not overfill the engine with oil**.
8. Install the oil dipstick and firmly seat it (Figure 18).
9. Lower the cargo box; refer to Lowering the Cargo Box (page 18).

Checking the Engine-Oil Level (Models 07273 and 07273TC)

Note: The machine is shipped with oil in the crankcase; however, check the oil before and after you start the engine.

Oil Type: Detergent oil (API service SF, SG, SH, SJ, or higher)

Viscosity: See the table below

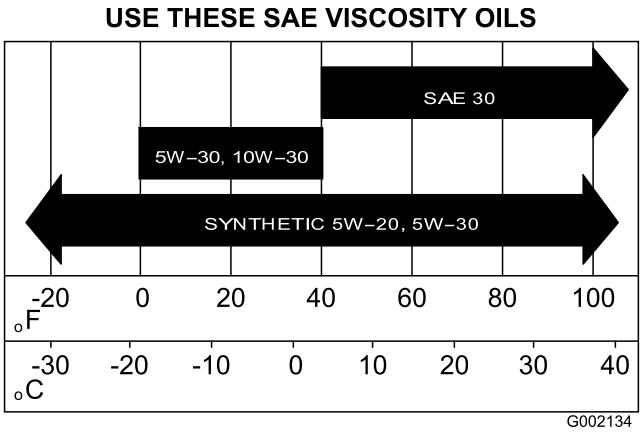

Figure 19

1. Move the machine to a level surface.
2. Raise the cargo box; refer to Raising the Cargo Box (page 17).
3. Use a rag to clean around the oil dipstick and fill cap (Figure 20) so that dirt cannot fall into the dipstick tube or oil-filler neck and damage the engine.

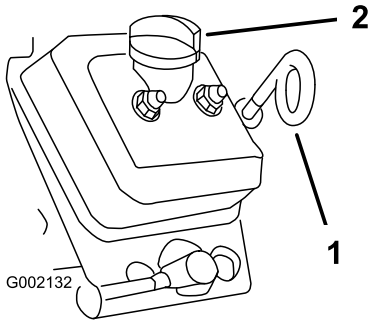

Figure 20

1. Oil dipstick (loop down) 2. Fill cap (filler neck)

4. Remove the oil dipstick and wipe the end clean (Figure 20).
5. Slide the oil dipstick into the dipstick tube fully seating it (Figure 20).
6. Pull the dipstick out and look at the end.
7. If the oil level is low, remove the filler cap and add the specified oil into the filler neck to raise the level up to Full mark on the dipstick.

   Note: Add the oil slowly and check the oil level often during this process. **Do not overfill the engine with oil**.
8. Install the filler cap; refer to Figure 20.
9. Install the oil dipstick and firmly seat it (Figure 20).

   Important: Make sure that the loop end of the oil dipstick is pointing down.
10. Lower the cargo box; refer to Lowering the Cargo Box (page 18).

Checking the Tire Air Pressure

Service Interval: Before each use or daily

Tire Air Pressure Range: 55 to 103 kPa (8 to 22psi)

Important: Do not exceed the maximum air pressure indicated on the sidewall of the tire.

Note: The air pressure needed in the tires is determined by the payload that you intend to carry.

1. Check the air pressure in the tires.

   Note: The air pressure range in the front and rear tires is 55 to 103 kPa (8 to 22psi).

   - Use lower air pressure in the tires for lighter payloads, for less the soil compaction, for a smoother the ride, and to minimize tire marks in the ground.
   - Use higher air pressure in the tires for carrying heavier payloads at higher speeds.
2. If needed, adjust the air pressure in the tires by adding or removing air in the tires.

Adding Fuel

- For best results, use only clean, fresh (less than 30 days old), unleaded gasoline with an octane rating of 87 or higher ((R+M)/2 rating method).
- **Ethanol**: Gasoline with up to 10% ethanol (gasohol) or 15% MTBE (methyl tertiary butyl ether) by volume is acceptable. Ethanol and MTBE are not the same. Gasoline with 15% ethanol (E15) by volume is not approved for use. **Never use gasoline that contains more than 10% ethanol by volume**, such as E15 (contains 15% ethanol), E20 (contains 20% ethanol), or E85 (contains up to 85% ethanol). Using unapproved gasoline may cause performance problems and/or engine damage which may not be covered under warranty.
- **Do not** use gasoline containing methanol.
- **Do not** store fuel either in the fuel tank or fuel containers over the winter unless a fuel stabilizer is used.
- **Do not** add oil to gasoline.

⚠ DANGER

In certain conditions, fuel is extremely flammable and highly explosive. A fire or explosion from fuel can burn you and others and can damage property.

- **Fill the fuel tank outdoors, in an open area, when the engine is cold. Wipe up any fuel that spills.**
- **Never fill the fuel tank inside an enclosed trailer.**
- **Do not fill the fuel tank completely full. Add fuel to the fuel tank until the level is 1 inch (25 mm) below the bottom of the filler neck. This empty space in the tank allows fuel to expand.**
- **Never smoke when handling fuel, and stay away from an open flame or where fuel fumes may be ignited by a spark.**
- **Store fuel in an approved container and keep it out of the reach of children. Never buy more than a 30-day supply of fuel.**
- **Do not operate without entire exhaust system in place and in proper working condition.**

⚠ DANGER

In certain conditions during fueling, static electricity can be released causing a spark which can ignite the fuel vapors. A fire or explosion from fuel can burn you and others and can damage property.

- **Always place fuel containers on the ground away from your vehicle before filling.**
- **Do not fill fuel containers inside a vehicle or on a truck or trailer bed because interior carpets or plastic truck bed liners may insulate the container and slow the loss of any static charge.**
- **When practical, remove fuel-powered equipment from the truck or trailer and refuel the equipment with its wheels on the ground.**
- **If this is not possible, then refuel such equipment on a truck or trailer from a portable container, rather than from a fuel dispenser nozzle.**
- **If a fuel dispenser nozzle must be used, keep the nozzle in contact with the rim of the fuel tank or container opening at all times until fueling is complete.**

Filling the Fuel Tank

The fuel tank capacity is approximately 26.5 L (7 US gallons).

1. Shut off the engine and set the parking brake.
2. Clean the area around the fuel-tank cap (Figure 21).

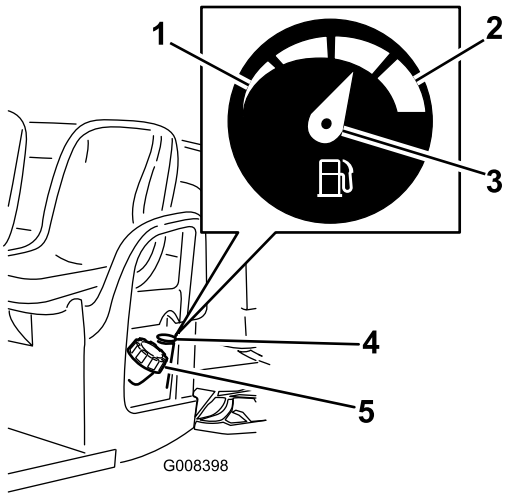

Figure 21

1. Empty
2. Full
3. Needle
4. Fuel gauge
5. Fuel-tank cap

3. Remove the fuel-tank cap.
4. Fill the tank to about 25 mm (1 inch) below the top of tank, (bottom of the filler neck).

   Note: This space in the tank allows fuel to expand. **Do not overfill the fuel tank.**.
5. Install the fuel tank cap securely.
6. Wipe up any fuel that may have spilled.

Starting the Engine

Important: Do not attempt to push or tow the machine to get it started.

1. Sit in the operator seat, insert the key into the On/Off switch, and rotate the key clockwise to the On position; refer to On/Off Switch (page 15).

   Note: When equipped with the optional backup alarm, if the gear-shift selector is moved to the Reverse position when the On/Off switch is in the On position, a buzzer will sound to warn the operator that the machine is in reverse gear.
2. Move the gear shift selector to the desired direction of travel for the machine; refer to Gear-shift Selector (page 14).
3. Release the parking brake by pushing down on parking-brake lever; refer to Parking Brake Lever (page 13).
4. Slowly step on the accelerator pedal.

   Note: If the engine is cold, press and hold the accelerator pedal about half-way down, and pull the choke knob out to the On position. Return the choke knob to Off after the engine warms up.

Stopping the Machine

Important: When stopping the machine on an incline, use the service brakes to stop the machine and set the parking brake to hold the machine in place. Using the accelerator to stall the machine on the hill can damage the machine.

1. Remove your foot from the accelerator pedal; refer to Accelerator Pedal (page 13)).
2. Slowly press the brake pedal to apply the service brakes until the machine comes to a complete stop; refer to Brake Pedal (page 13).

   Note: The stopping distance may vary depending on the machine load and speed.

Parking the Machine

1. Stop the machine using the service brakes by pressing and holding the brake pedal; refer to Brake Pedal (page 13).
2. Set the parking brake by pulling up the parking-brake lever; refer to Parking Brake Lever (page 13).
3. Rotate the key for the On/Off switch counterclockwise to the Off position; refer to On/Off Switch (page 15).
4. Remove the key from the On/Off switch.

Breaking in a New Machine

Service Interval: After the first 100 hours—Perform the breaking in a new machine guidelines.

Perform the breaking in a new machine guidelines to provide proper performance and long life for the machine.

- Check the fluid and engine oil levels regularly. Remain alert for signs that the machine or its components are overheating.
- After starting a cold engine, let it warm up for about 15 seconds before using the machine.
- Avoid hard braking situations for the first several hours of new machine break-in operation. New brake linings may not be at optimum performance until several hours of use has caused the brakes to become burnished (broken-in).
- Vary the machine speed during operation. Avoid fast starts and quick stops.
- A break-in oil for engine is not required. Original engine oil is the same type specified for regular oil changes.
- Refer to the Maintaining the Machine under Special Operating Conditions (page 28)for any special low hour checks.
- Check the front suspension positioning and adjust it if necessary; refer to Adjusting the Front Wheel Toe-in and Camber (page 44).

Loading the Cargo Box

Use the following guidelines when loading the cargo box and operating the machine:

- Observe the weight capacity of the machine and limit the weight of the load that you carry in the cargo box as described in Specifications (page 16) and on the gross vehicle weight tag of the machine (Figure 22).

  Note: Note : The load rating is specified for machine operation on a level surface only.

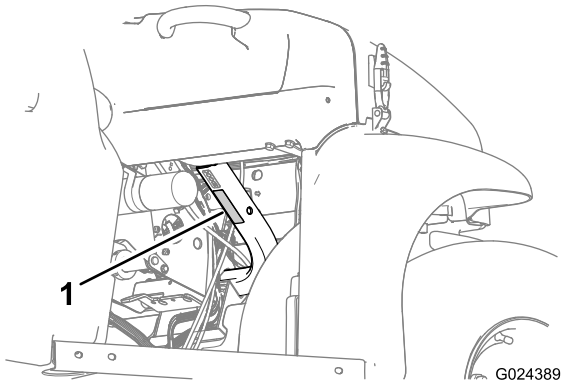

Figure 22

1. Gross machine weight decal

- Reduce the weight of the load that you carry in the cargo box when operating the machine on hills and rough terrain.
- Reduce the weight of the load that you carry when the materials are tall (and have a high center of gravity) such as a stack of bricks, landscaping timbers, or fertilizer bags. Distribute the load as low as possible, making sure that the load does not reduce your ability to see behind the machine when operating it.
- Keep loads centered by loading the cargo box as follows:
  - Evenly position the weight in the cargo box from side to side.

    Important: Tipping over is more likely to occur if the cargo box is loaded to one side.
  - Evenly position the weight in the cargo box from front to back.

    Important: Loss of steering control or the machine may tip over if you position the load behind the rear axle and the traction on the front tires is reduced.
- Use extra caution when transporting oversized loads in the cargo box, particularly when you cannot center the wight of the oversize load to the cargo box
- Whenever possible, secure the load by binding it to the cargo box so it does not shift.
- When transporting liquid in a large tank (such as a sprayer tank), use caution when driving the machine up hill or down hill, when suddenly changing speed or stopping, or when driving over tough surfaces.

The capacity of the cargo box is 0.37 m^3 (13 ft^3). The amount (volume) of material that can be placed in the box without exceeding the load ratings of the machine can vary greatly depending on the density of the material. For example, a level box of wet sand weighs approximately 680 kg (1500 lb), which exceeds the load rating by 113 kg (250 lb). But a level box of wood weighs 295 kg (650 lb), which is under the load rating.

See the table below for load volume limits with various materials:

Material	Density	Maximum Cargo Box Capacity (on level ground)
Gravel, dry	1 521.7 kg/m^3 (95 lb/ft^3)	Full
Gravel, wet	1 922.2 kg/m^3 (120 lb/ft^3)	3/4 full
Sand, dry	1 441.6 kg/m^3 (90 lb/ft^3)	Full
Sand, wet	1 922.2 kg/m^3 (120 lb/ft^3)	3/4 full
Wood	720.8 kg/m^3 (45 lb/ft^3)	Full
Bark	<720.8 kg/m^3 (<45 lb/ft^3)	Full
Earth, packed	1 601.8 kg/m^3 (100 lb/ft^3)	3/4 full (approx.)

Transporting the Machine

Use a trailer to move the machine a long distance. Make sure that the machine is securely bound to the trailer. Refer to Figure 24 and Figure 23 for the location of the tie-down points on the machine.

⚠ CAUTION

Loose seats may fall off of the machine and trailer when transporting the machine, and the seats may land on another machine or obstruct the roadway.

Remove the seats or make sure that the seats are securely fastened to the coupling in the seat shroud.

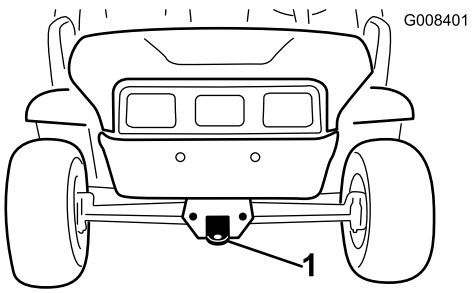

Figure 23

1. Towing tongue and tie down point (front of the machine)

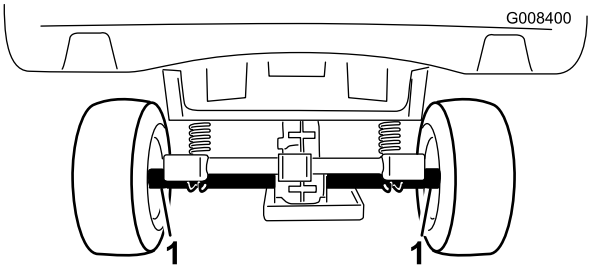

Figure 24

1. Rear axle tie-down points (back of the machine)

Towing the Machine

In case of an emergency, the machine can be towed for a short distance. However, we do not recommend this as a standard operating procedure.

⚠ WARNING

Towing at excessive speeds could cause a loss of steering control, resulting in personal injury.

Never tow the machine faster than 8 km/h (5 mph).

Towing the machine is a 2-person job. If the machine must be moved a considerable distance, transport it on a truck or trailer; refer to Transporting the Machine (page 24).

1. Remove the drive belt from the machine; refer to Replacing the Drive Belt (page 50).
2. Affix a tow line to the tongue at the front of the machine's frame (Figure 23).
3. Put the transmission of the machine in neutral and release the parking brake; refer to Gear-shift Selector (page 14) and Parking Brake Lever (page 13).

Towing a Trailer

The machine is capable of pulling trailers. 2 types of tow hitches are available for the machine, depending on your application. Contact your Authorized Toro Distributor for details.

When hauling cargo or towing a trailer, do not overload your machine or trailer. Overloading either the machine or the trailer can cause poor performance or damage to the brakes, axle, engine, transaxle, steering, suspension, body structure, or tires. Always load a trailer with 60% of the cargo weight in the front of the trailer. This places approximately 10% of the Gross Trailer Weight (GTW) on the tow hitch of the machine.

- **Models 07266TC and 07279:** The maximum cargo load shall not exceed 567 kg (1250 lb), including the GTW. For example, if the GTW = 181.5 kg (400 lb) then the maximum cargo load = 386 kg (850 lb)
- **Models 07273 and 07273TC:** The maximum cargo load shall not exceed 749 kg (1650 lb), including the GTW.

For example, if the GTW = 181.5 kg (400 lb) then the maximum cargo load = 5678 kg (1250 lb)

To provide adequate braking and traction, always load the cargo box when trailering. Do not exceed the GTW or GVW limits.

Avoid parking a machine with a trailer on a hill. If you must park on a hill, set the parking brake and block the tires of the trailer.

Maintenance

Note: Looking for an *Electrical Schematic* for your machine? Download a free copy of the schematic by visiting www.Toro.com and searching for your machine from the Manuals link on the home page.

Note: Determine the left and right sides of the machine from the normal operating position.

Recommended Maintenance Schedule(s)

Maintenance Service Interval	Maintenance Procedure
After the first 8 hours	• Check the condition of the drive belt. • Check the tension of the starter-generator belt.
After the first 25 hours	• Change the engine oil. • Change the oil filter (Models 07273 and 07273TC).
After the first 50 hours	• Check the air filter for the carbon canister. • Replace the carbon-canister filter.
After the first 100 hours	• Perform the breaking in a new machine guidelines.
After the first 200 hours	• Replace the air filter element.
Before each use or daily	• Preform the pre-staring checks. Check the following items each time you begin using the machine for the day: • Check the brake-fluid level. • Check the engine oil level. • Check the tire pressure. • Check gear-shift operation.
Every 100 hours	• Grease the bearings and bushings. • Check the air filter. Replace the air filter element sooner if it dirty or damaged. • Change the engine oil. • Change the oil filter (Models 07273 and 07273TC). • Check the spark plug. • Check the condition of the tires and rims. • Torque the wheel-lug nuts. • Check the front wheel toe-in and camber. • Check the transaxle oil level. • Check the operation of the Neutral gear shift position. • Clean the engine cooling areas. • Inspect the brakes.
Every 200 hours	• Check the air filter for the carbon canister. • Replace the carbon-canister filter. • Adjust the parking brake if needed. • Check the condition and tension of the drive belt. • Check the tension of the starter-generator belt.
Every 300 hours	• Grease the front wheel bearings.
Every 400 hours	• Inspect the fuel lines and connections. • Clean the primary-drive clutch.
Every 800 hours	• Replace the fuel filter. • Change the transaxle fluid.
Every 1,000 hours	• Change the brake fluid.
Yearly	• Complete all of the yearly maintenance procedures that are specified in the engine owner's manual.

Important: **Refer to your engine owner's manual for additional maintenance procedures.**

Daily Maintenance Checklist

Duplicate this page for routine use.

Maintenance Check Item	For the week of:						
	Mon.	Tues.	Wed.	Thurs.	Fri.	Sat.	Sun.
Check brake and parking brake operation.							
Check gear shift/neutral operation.							
Check fuel level.							
Check engine oil level.							
Check transaxle oil level.							
Inspect air filter.							
Inspect engine cooling fins.							
Check unusual engine noises.							
Check unusual operating noises.							
Check tire pressure.							
Check fluid leaks.							
Check instrument operation.							
Check accelerator operation.							
Lubricate all grease fittings.							
Touch up damaged paint.							

⚠ WARNING

The cargo box must be raised to perform some routine maintenance.

A raised cargo box can fall and injure persons that are underneath it.

- **Always use the prop rod to hold the cargo box up before working under it.**
- **Remove any load material from the cargo box before working under it.**

⚠ CAUTION

If you leave the key in the On/Off switch, someone could accidently start the engine and seriously injure you or other bystanders.

Remove the key from the starter switch and disconnect the wire from the spark plug before you do any maintenance. Set the wire aside so that it does not accidentally contact the spark plug.

Premaintenance Procedures

Maintaining the Machine under Special Operating Conditions

If the machine is subjected to any of the conditions listed below, maintenance should be performed twice as frequently.

- Desert operation
- Cold climate operation (below 10° C [50° F])
- Trailer towing
- Driving time typically less than 5 minutes
- Frequent operation in dusty conditions
- Construction work
- After extended operation in mud, sand, water, or similar dirty conditions, have your brakes inspected and cleaned as soon as possible. This will prevent any abrasive material from causing excessive wear.
- Under frequent heavy duty operating conditions, lubricate all grease fittings and inspect air cleaner daily to prevent excessive wear.

Preparing to Maintain the Machine

1. Park the machine on a level surface.
2. Set the parking brake, shut off the engine, and remove the starter key.
3. Allow the engine and exhaust system to cool.

Lifting the Machine

⚠ DANGER

The machine may be unstable when using a jack. It could slip off the jack, injuring anyone beneath it.

- **Do not start the engine while the machine is on a jack.**
- **Always remove the key from the starter switch before getting off of the machine.**
- **Block the tires when the machine is supported by lifting equipment.**
- **Use jack stands to support the machine once you have lifted the it.**

Important: Whenever the engine is run for routine maintenance and/or engine diagnostics, the rear wheels of the machine should be 25 mm (1 inch) off the ground, with the rear axle supported on jack stands.

- The lifting point at the front of the machine is at the front of the frame behind the towing tongue (Figure 25).

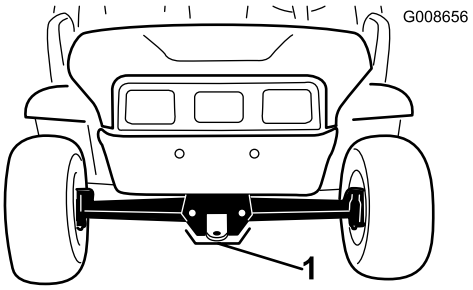

Figure 25

1. Front lifting point

- The lifting point at the rear of the machine is under the axle tubes (Figure 26).

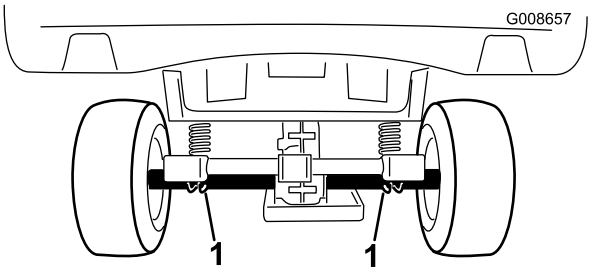

Figure 26

1. Rear lifting points

Accessing the Hood

Raising the hood

1. Lift up the handle of the rubber latches at each side of the hood (Figure 27).

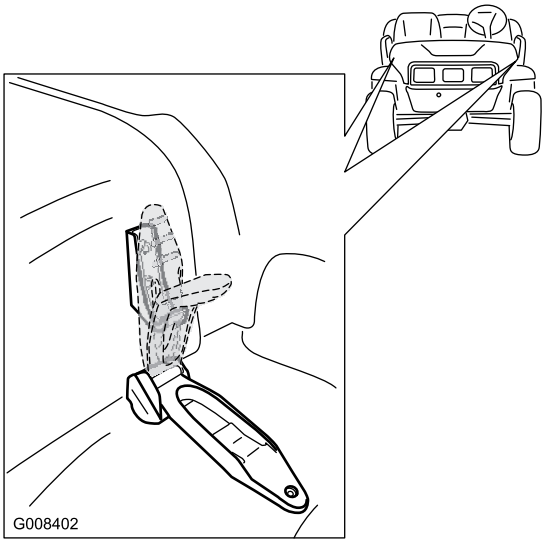

Figure 27

2. Raise the hood.

Closing the Hood

1. Gently lower the hood onto the chassis.
2. Secure the hood by aligning the rubber latches onto the latch anchors at each side of the hood (Figure 27).

Lubrication

Greasing the Machine

Service Interval: Every 100 hours/Yearly (whichever comes first)—Grease the bearings and bushings. Grease the machine more frequently when using it for heavy-duty operations.

Grease Type: Number 2 general-purpose, lithium-based grease

1. Use a rag to wipe the grease fitting clean so that foreign matter cannot be forced into the bearing or bushing.
2. With a grease gun, apply 1 or 2 pumps of grease into the grease fittings on the machine.
3. Wipe the excess grease off the machine.

The grease fittings are located at the 4 tie-rod ends (Figure 28) and the 2 king pins (Figure 29).

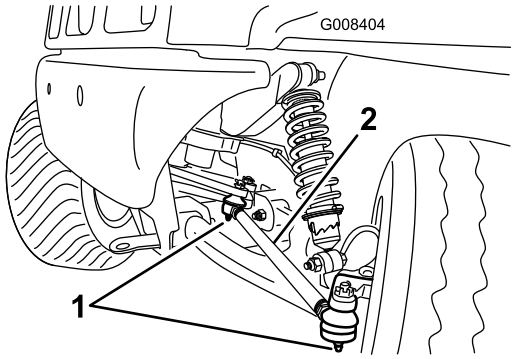

Figure 28
Left side shown

1. Grease fitting
2. Tie rod

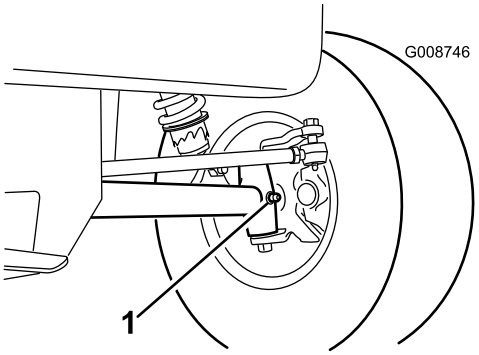

Figure 29
Left side shown

1. Grease fitting (king pin)

Greasing the Front Wheel Bearings

Service Interval: Every 300 hours

Grease specification: Mobilgrease XHP™-222

Removing the Hub and Rotor

1. Lift the front of the machine and support it with jack stands.
2. Remove the 5 lug nuts that secure the wheel to the hub (Figure 30).

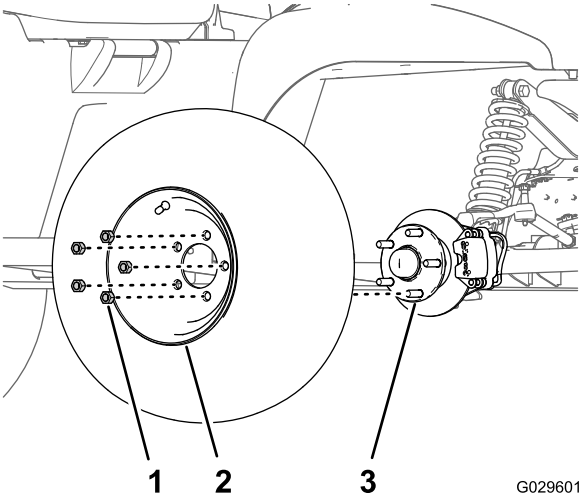

Figure 30

1. Lug nut
2. Wheel
3. Hub

3. Remove the flange-head bolts (3/8 x 1 inch) that secure the bracket for the brake assembly to the spindle and separate the brake from the spindle (Figure 31).

   Note: Support the brake assembly before proceeding to the next step.

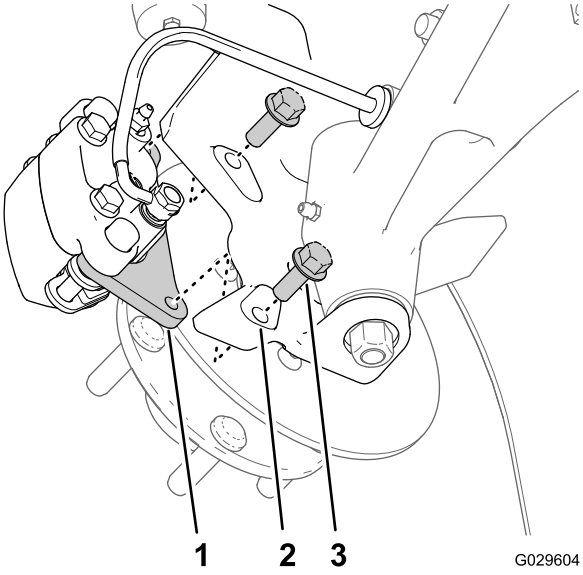

Figure 31

1. Caliper bracket (brake assembly)
2. Spindle
3. Flange-head bolts (3/8 x 1 inch)

4. Remove the dust cap from the hub (Figure 32).

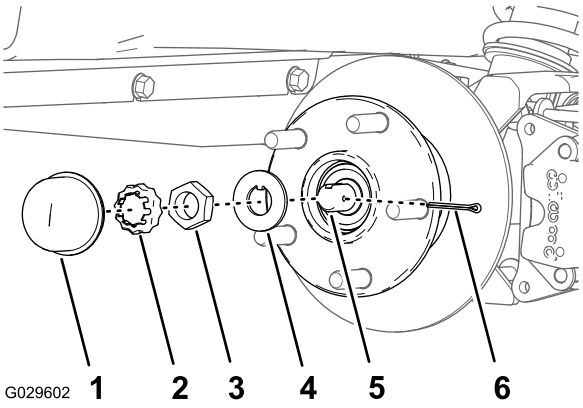

Figure 32

1. Dust cap
2. Nut retainer
3. Spindle nut
4. Tab washer
5. Spindle
6. Cotter pin

5. Remove the cotter pin and hut retainer from the spindle and spindle nut (Figure 32).
6. Remove the spindle nut from the spindle, and separate the hub and rotor assembly from the spindle (Figure 32 and Figure 33).

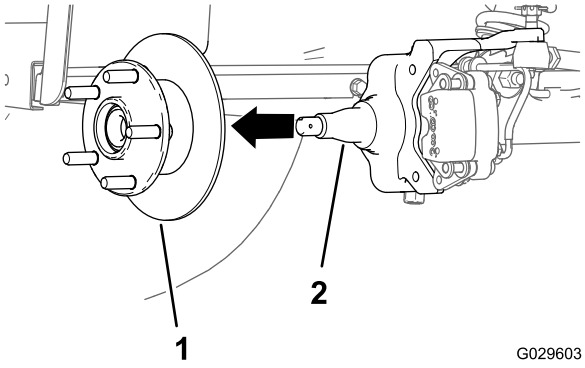

Figure 33

1. Hub and rotor assembly
2. Spindle

7. Wipe clean the spindle with a rag.
8. Repeat steps 1 through 7 to the hub and rotor at the other side of the machine.

Greasing the Wheel Bearings

1. Remove the outboard bearing and bearing race from the hub (Figure 34).

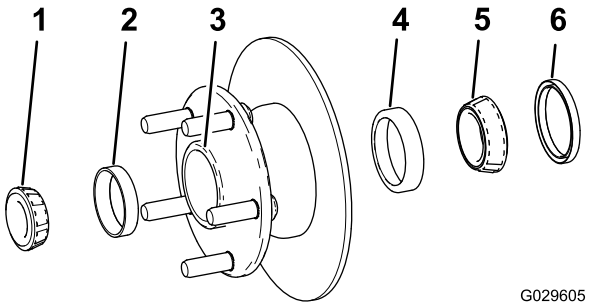

Figure 34

1. Outboard bearing
2. Outboard-bearing race
3. Bearing cavity (hub)
4. Inboard-bearing race
5. Inboard bearing
6. Seal

2. Remove the seal, inboard bearing and bearing race from the hub (Figure 34).
3. Wipe clean the seal and check for wear and damage.

   Note: Do not use cleaning solvent to clean the seal. Replace the seal if it is worn or damaged.
4. Clean the bearings and races, and check these parts for wear and damage.

   Note: Replace all worn or damaged parts. Ensure that the bearings and races are clean and dry.
5. Clean the cavity of the hub of all grease, dirt, and debris (Figure 34).
6. Pack the bearings with the specified grease.
7. Install the inboard and outboard bearing races into the hub (Figure 34).

   Note: Ensure that the races are fully seated in the bores of the hub.
8. Fill the cavity of hub 50 to 80% full of the specified grease (Figure 34).
9. Assemble the inboard bearing onto the race at the inboard side of the hub and install the seal (Figure 34).
10. Repeat steps 1 through 9 to the bearings for the other hub.

Installing the Hub and Rotor

1. Apply a light coat of the specified grease to the spindle (Figure 35).

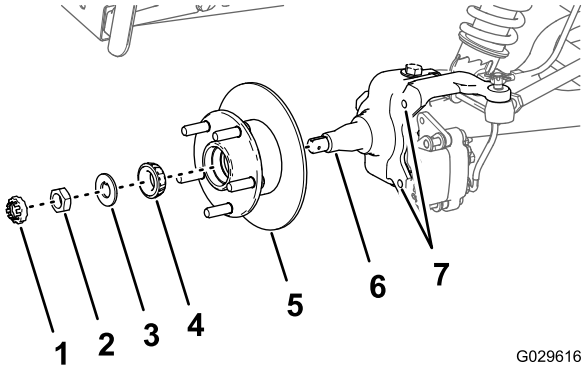

Figure 35

1. Retainer
2. Spindle nut
3. Tab washer
4. Outer bearing
5. Hub, rotor, inner bearing, race, and seal
6. Spindle
7. Holes (brake mount of the spindle frame)

2. Assemble the hub and rotor onto the spindle with the rotor inboard (Figure 35).
3. Assemble the outboard bearing onto the spindle and seat the bearing to the outboard race (Figure 35).
4. Assemble the tab washer onto the spindle (Figure 35).
5. Thread the spindle nut onto the spindle and tighten the nut while rotating the hub (Figure 35).

   Note: Tighten the nut and rotate the spindle until the bearings are fully seated and the hub has no linear-end movement.
6. Loosen the spindle nut until the hub rotates freely.
7. Torque the spindle nut to 170 N-cm (15 in-lb) while rotating the hub.
8. Install the retainer over the nut and check the alignment of the slot in the retainer and the hole in the spindle for the cotter pin (Figure 36).

   Note: If the slot in the retainer and the hole in the spindle are not aligned, tighten the spindle nut to align the slot and hole to a maximum torque of 226 N-cm (20 in-lb) on the nut.

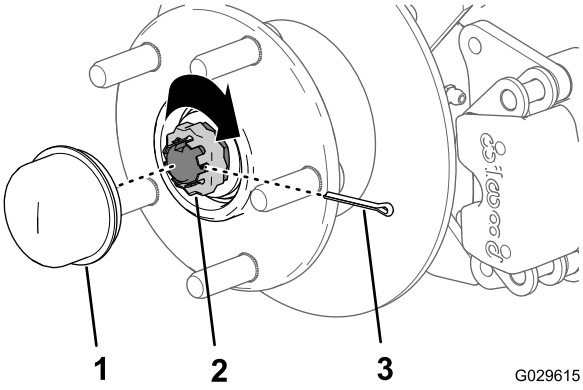

Figure 36

1. Dust cap
2. Nut retainer
3. Cotter pin

9. Install the cotter pin and bend each legs around the retainer (Figure 36).
10. Install the dust cap onto the hub (Figure 36).
11. Repeat steps 1 through 10 for the hub and rotor at the other side of the machine.

Installing the Brakes and Wheels

1. Clean the 2 flange-head bolts (3/8 x 1 inch) and apply a coat for anti-seize compound to the threads of the bolts.
2. Align the brake pads to either side of the rotor (Figure 31) and the holes in the caliper bracket with the holes in the brake mount of the spindle frame (Figure 35).
3. Assemble caliper bracket to the spindle frame (Figure 31) with the 2 flange-head bolts (3/8 x 1 inch), and torque the bolts 47 to 54 N-cm (35 to 40 ft-lb).
4. Align the holes in the wheel to the studs of the hub and assemble the wheel to the hub with the valve stem outward (Figure 30).

   Note: Ensure the mounting surface of the wheel is flush with the hub.
5. Secure the wheel to the hub with the lug nuts (Figure 30), and torque the nuts to 108 to 122 N-m (80 to 90 ft-lb).
6. Repeat steps 1 through 5 for the brake and wheel at the other side of the machine.

Engine Maintenance

Servicing the Air Filter

Service Interval: Every 100 hours Replace the air filter element sooner if it dirty or damaged.

After the first 200 hours

Note: Service the air cleaner more frequently (every few hours) if operating conditions are extremely dusty or sandy.

Checking the Air Filter

1. Raise the cargo box and secure it with the prop rod; refer to Raising the Cargo Box (page 17).
2. Check the air cleaner body for damage which could possibly cause an air leak. Ensure the cover is sealing around the air cleaner body (Figure 37 and Figure 38).

   Note: Replace a damaged air cleaner cover or housing.

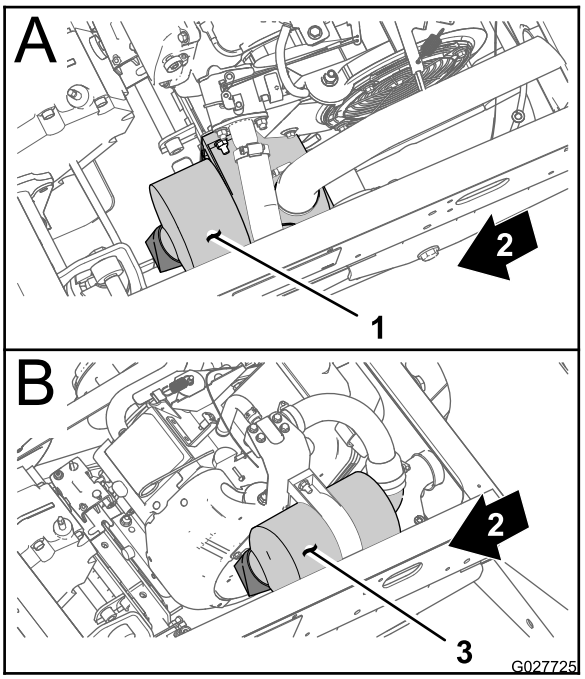

Figure 37

1. Air-filter assembly **(Models 07266TC and 07279)**
2. Back of the machine
3. Air-filter assembly **(Models 07359 and 07359TC)**

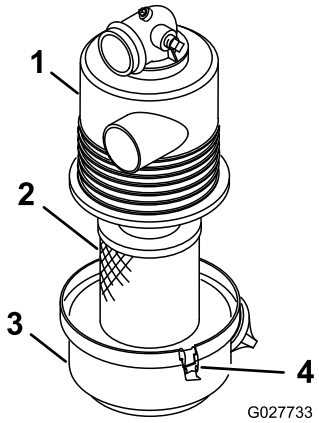

Figure 38

1. Air-filter housing
2. Air-filter element
3. Air-filter cover
4. Latch

3. Release the latches securing the air-filter cover to the air-filter housing (Figure 38).
4. Separate the air-filter cover from the air-filter housing, and clean the inside of the cover (Figure 38).
5. Gently slide the air-filter element out of the filter housing.

   Note: To reduce the amount of dust dislodged, avoid knocking the filter against the air-filter housing.
6. Inspect the air-filter element.
   - If the air-filter element is clean, install the filter element, refer to Installing the Air Filter (page 33).
   - If the air-filter element is damaged, replace the filter element; refer to Replacing the Air Filter (page 33).

Replacing the Air Filter

1. Remove the air-filter element; refer to .
2. Inspect the new filter for shipping damage.

   Note: Check the sealing end of the filter.

   Important: Do not install a damaged filter.
3. Install the new air filter; refer to Installing the Air Filter (page 33).

Installing the Air Filter

Important: To prevent engine damage, always operate the engine with the complete air cleaner assembly installed.

Important: Do not use a damaged element.

Note: Cleaning of the used air-filter element is not recommended due to the possibility of damage to the filter media.

1. Clean the dirt ejection port located on the air-filter cover.
2. Remove the rubber outlet valve from the cover, clean the cavity, and replace the outlet valve.
3. Insert the air-filter element into air-filter housing (Figure 38).

   Note: Ensure that the filter is sealed properly by applying pressure to the outer rim of the filter when installing it. Do not press on the flexible center of the filter.
4. Align the air-cleaner cover with the air-cleaner housing (Figure 38).
5. Secure the cover to the housing with the latches (Figure 38).
6. Lower the cargo box; refer to Lowering the Cargo Box (page 18).

Servicing the Engine Oil

Service Interval: After the first 25 hours

Every 100 hours (Change the oil twice as often during special operating conditions; refer to Maintaining the Vehicle under Special Operating Conditions.)

Note: Change the oil more frequently when operating conditions are extremely dusty or sandy.

Note: Dispose of the used engine oil and oil filter at a certified recycling center.

Changing the Oil (Models 07266TC and 07279)

Oil Type: Detergent oil (API service SJ or higher)

Oil Capacity: 1.1 L (1.2 qt)

Viscosity: See the following table.

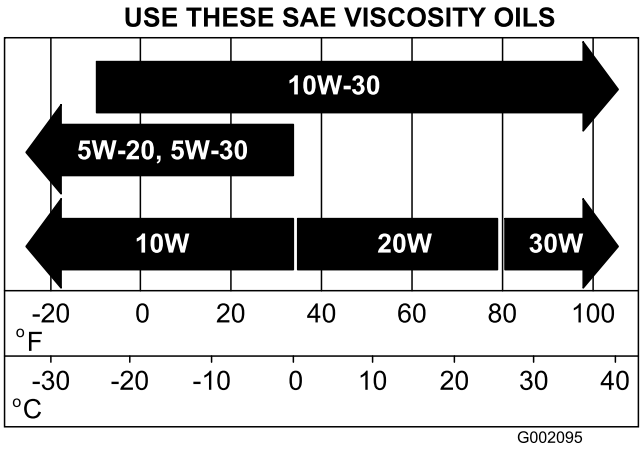

Figure 39

1. Start the vehicle and let the engine run for a few minutes.
2. Park the machine on a level surface, set the parking brake, rotate the On/Off switch to the Off position, and remove the key.
3. Raise the cargo box and secure it with the prop rod; refer to Raising the Cargo Box (page 17).
4. Disconnect the positive battery cable; refer to Disconnecting the Battery (page 41).
5. Align a drain pan with a 1.5 L (1.6 qt) capacity under the drain plug (Figure 40).

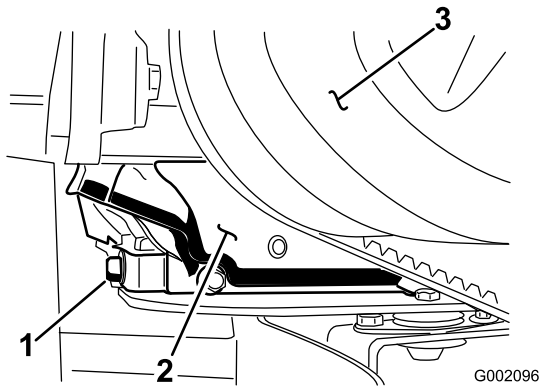

Figure 40

1. Engine-oil-drain plug
2. Engine
3. Primary drive clutch

6. Remove the drain plug (Figure 40).

   Note: Allow the oil to completely drain from the engine.

7. Install the drain plug and seal and torque the plug to 17.6 N-m (13 ft-lb).
8. Clean around the oil dipstick and fill spout, and remove the dipstick (Figure 41).

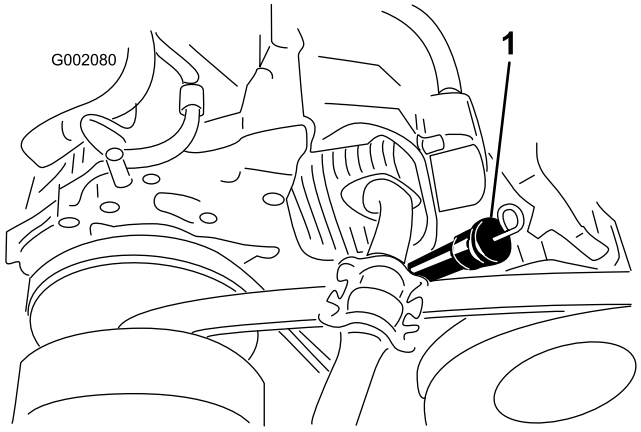

Figure 41

1. Oil dipstick and fill spout

9. Pour the specified oil into the into the filler spout until the oil level is up to the Full mark on the dipstick (Figure 41).

   Note: Add the oil into the engine slowly and check the oil level often during this process. **Do not overfill the engine with oil.**

10. Insert the dip stick fully into the fill spout, remove the dipstick, and check the oil level (Figure 41).

    Note: If necessary, add the specified oil into the engine until the oil level is at the Full mark on the dipstick.

11. Install the dipstick into the fill spout until the dipstick is firmly in place (Figure 41).

12. Connect the battery, and lower the cargo box; refer to Connecting the Battery (page 42) and Lowering the Cargo Box (page 18).

Changing the Oil (Models 07273 and 07273TC)

Oil Type: Detergent oil (API service SL or higher)

Crankcase Capacity: 1.4 L (1.5 qt) when the filter is changed

Viscosity: See the table below

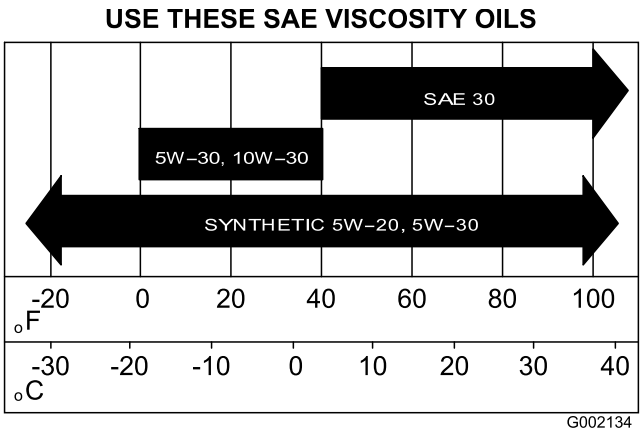

Figure 42

1. Start the vehicle and let the engine run for a few minutes.
2. Park the machine on a level surface, set the parking brake, rotate the On/Off switch to the Off position, and remove the key.
3. Raise the cargo box and secure it with the prop rod; refer to Raising the Cargo Box (page 17).
4. Disconnect the positive battery cable; refer to Disconnecting the Battery (page 41).
5. Align a drain pan with a 1.8 L (1.9 qt) capacity under the drain plug (Figure 43).

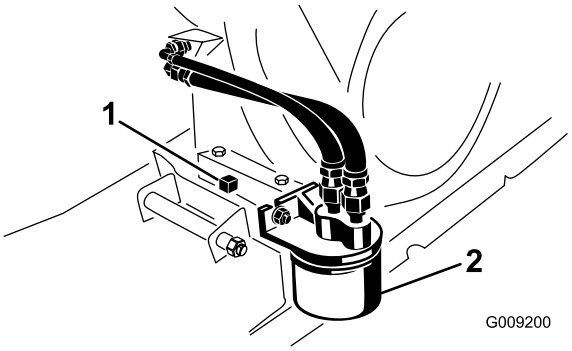

Figure 43

1. Engine-oil-drain plug 2. Engine-oil filter

6. Remove the drain plug and seal (Figure 43).

Note: Allow the oil to completely drain from the engine.

7. Install the drain plug and seal and torque the drain plug to 17.6 N-m (13 ft-lb).
8. Clean around the oil dipstick, fill cap, and filler neck, and remove the dipstick (Figure 44).

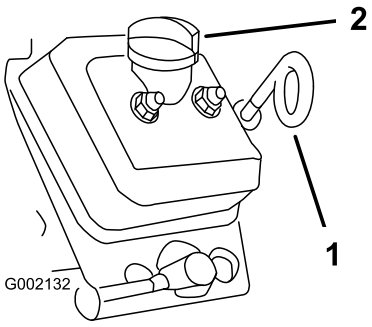

Figure 44

1. Oil dipstick (loop down)< 2. Fill cap (filler neck)

9. Remove the fill cap and pour the specified oil into the into the filler neck until the oil level is up to the Full mark on the dipstick (Figure 44).

Note: Add the oil into the engine slowly and check the oil level often during this process. **Do not overfill the engine with oil.**

10. Insert the dip stick fully into the dipstick tube, remove the dipstick, and check the oil level (Figure 44).

Note: If necessary, add the specified oil into the engine until the oil level is at the Full mark on the dipstick.

11. Install the dipstick into the dipstick tube and the fill cap into the filler neck until the dipstick and cap are firmly in place (Figure 44).
12. Connect the battery, and lower the cargo box; refer to Connecting the Battery (page 42) and Lowering the Cargo Box (page 18).

Changing the Oil Filter (Models 07273 and 07273TC)

Service Interval: After the first 25 hours

Every 100 hours/Yearly (whichever comes first)
Change the oil twice as often during special operating conditions; refer to Maintaining the Vehicle under Special Operating Conditions.

Note: There is no oil filter for models 07266TC and 07279.

1. Drain the oil from the engine; refer to steps 1 through 7 in Checking the Engine-Oil Level (Models 07273 and 07273TC) (page 21).
2. Remove the existing oil filter (Figure 43).

3. Apply a light coat of clean oil to the gasket of the new oil filter.
4. Thread the new filter onto the filter adapter until the gasket contacts the mounting plate, then tighten the filter an additional 1/2 to 3/4 turn further (Figure 43).

   Note: Do not overtighten the oil filter.
5. Fill the crankcase with the specified oil; refer to Figure 42 in Changing the Oil (Models 07273 and 07273TC) (page 35).
6. Start and run the engine to check for oil leaks.
7. Stop the engine and check the oil level.

   Note: If necessary, add the specified oil into the engine until the oil level is at the Full mark on the dipstick.

Servicing the Spark Plug

Checking and Replacing the Spark Plug

Service Interval: Every 100 hours/Yearly (whichever comes first) Replace the spark plug if necessary.

Type: Champion RN14YC (or equivalent)

Air Gap: 0.030 inch (0.762 mm)

Important: A cracked, fouled, dirty, or malfunctioning spark plug must be replaced. Do not sand-blast, scrape, or clean electrodes by using a wire brush because grit may eventually release from the plug and fall into the cylinder. The result is usually a damaged engine.

Note: The spark plug usually lasts a long time; however, the plug should be removed and checked whenever the engine malfunctions.

1. Clean the area around the spark plug so that foreign matter cannot fall into the cylinder when the spark plug is removed.
2. Pull the wire off of the terminal of the spark plug.
3. Remove the plug from the cylinder head.
4. Check the condition of the side electrode, center electrode, and center electrode insulator to ensure that there is no damage (Figure 45).

   Note: Do not use a damaged or worn spark plug. Replace it with a new spark plug of the specified type.

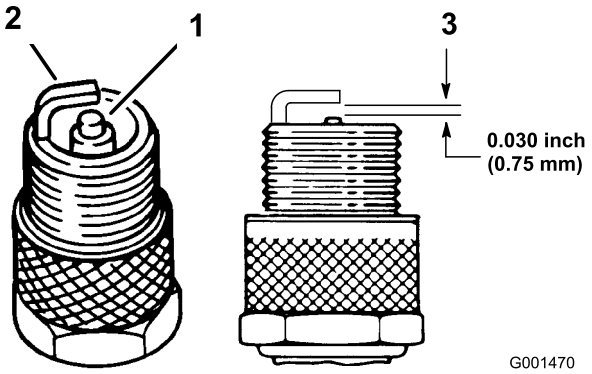

Figure 45

1. Center electrode insulator
2. Side electrode
3. Air gap (not to scale)

5. Set the air gap between the center and side of the electrodes at 0.762 mm (0.030 inch) (Figure 45).
6. Install the spark plug into the cylinder head, and torque the plug to 20 N-m (14.7 ft-lb).
7. Install the spark plug wire.
8. **Models 07273 and 07273TC only**—repeat steps 1 through 7 for the other spark plug.

Fuel System Maintenance

Inspecting Fuel Lines and Connections

Service Interval: Every 400 hours/Yearly (whichever comes first)

Inspect the fuel lines, fittings, and clamps for signs of leaking, deterioration, damage, or loose connections.

Note: Repair any damaged or leaking fuel system component before using the machine.

Replacing the Fuel Filter

Service Interval: Every 800 hours/Yearly (whichever comes first)

1. Raise the box and support it with the prop rod; refer to Raising the Cargo Box (page 17).
2. Rotate the On/Off switch to the Off position, and remove the key.
3. Disconnect the battery; refer to Disconnecting the Battery (page 41).
4. Place a clean container under the fuel filter.
5. Remove the clamps securing the fuel filter to the fuel lines (Figure 46).

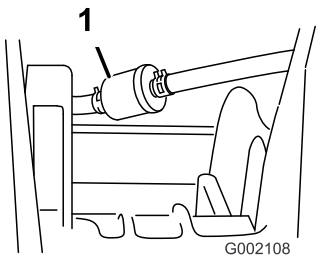

Figure 46

1. Fuel filter

6. Remove the old fuel filter from the fuel lines.

   Note: Drain the old filter and discard it at a certified recycling center.
7. Install the replacement filter to the fuel lines so that the arrow points **toward** the carburetor.
8. Secure the filter to the lines with the clamps the you removed in step 5.
9. Connect the battery, and lower the cargo box; refer to Connecting the Battery (page 42)and Lowering the Cargo Box (page 18).

Servicing the Carbon Canister

Checking the Air Filter for the Carbon Canister

Service Interval: After the first 50 hours

Every 200 hours

Check the opening at the bottom of the air filter for the carbon canister to ensure that it is clean and free of debris and obstructions (Figure 47).

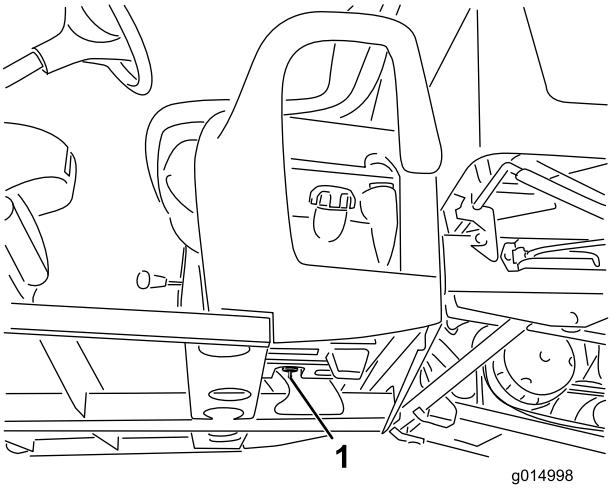

Figure 47

1. Air filter opening (located inboard of the fuel tank and below the carbon canister)

Replacing the Carbon-Canister Filter

Service Interval: After the first 50 hours

Every 200 hours

1. Remove the barbed fitting of the carbon-canister filter from the hose at the bottom of the carbon canister, and remove the filter.

   Note: Discard the old filter.

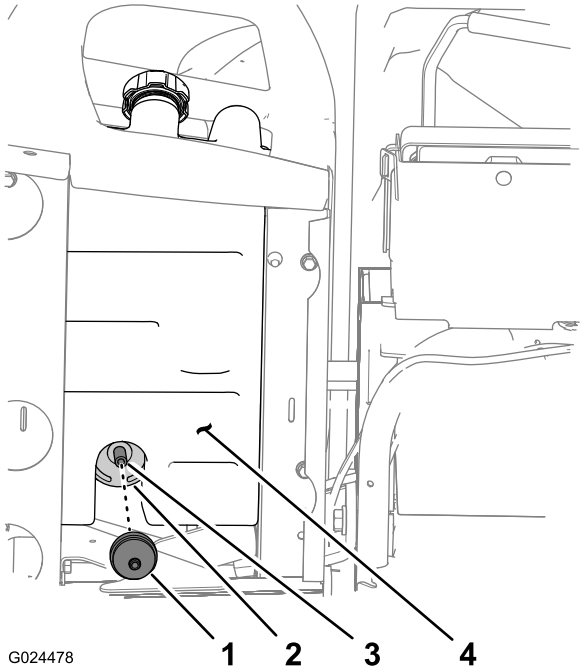

Figure 48

1. Carbon-canister filter
2. Carbon canister
3. Hose
4. Fuel tank

2. Fully insert the barbed fitting of the new carbon-canister filter into the hose at the bottom of the carbon canister.

Replacing the Carbon Canister

Note: Replace the carbon canister if it is damaged, plugged, and the machine is run without a carbon-canister filter.

Note: Replace the carbon-canister filter when replacing the carbon canister.

Disconnecting the Controls at the Seat Base

1. Remove the knob from the gear-shift lever (Figure 49).

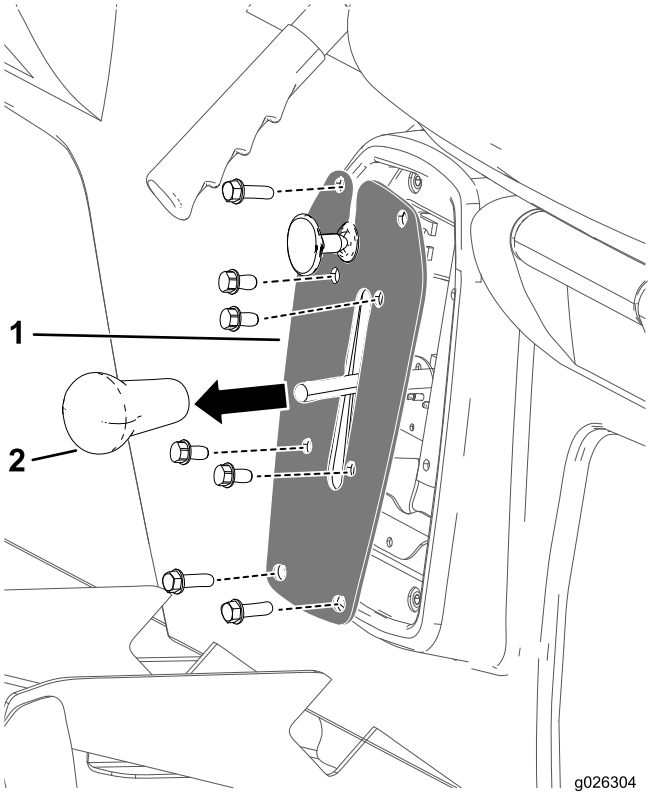

Figure 49

1. Gear-shift-lever knob
2. Shifter plate

2. Remove the 4 bolts that secure the shifter plate to the shifter bracket (Figure 49).
3. Remove the 4 bolts that secure the shifter plate to the seat base and remove the shifter plate (Figure 49).

Disconnecting the Parking-Brake Cable

1. At the bottom of the machine, remove the cable tie that secures the parking-brake cable to the service brake line (Figure 50).
2. Mark a rotation stripe on the forward jam nut for the parking-brake cable (Figure 50).

   Note: Ensure that the forward-jam nut does not rotate.

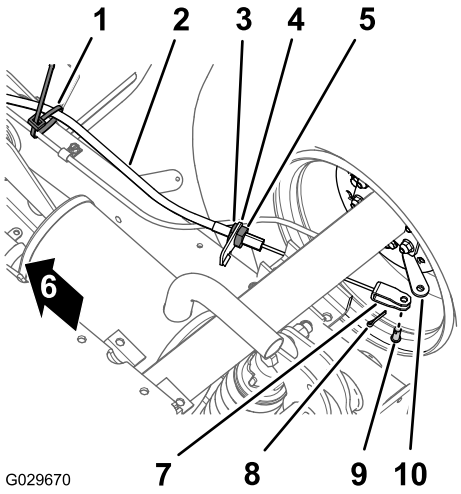

Figure 50

1. Cable tie
2. Parking-brake cable
3. Forward-jam nut
4. Brake-cable bracket
5. Rear-jam nut
6. Front of the machine
7. Clevis
8. Cotter pin
9. Clevis pin
10. Brake-actuating lever

3. Loosen the rear-jam nut and remove the cable from the brake-cable bracket (Figure 50).
4. Remove the cotter pin and the clevis pin that secure the clevis for the parking-brake cable to the brake-actuating lever and separate the cable from the lever (Figure 50).
5. Repeat steps 1 through 4 to the parking-brake cable at the other side of the machine.

Removing the Seats and Seat Bases

1. At the bottom of the machine, remove the 8 flange-head bolts and 8 washers that secure the seat base to the floor plate and rear-cab channel (Figure 51).

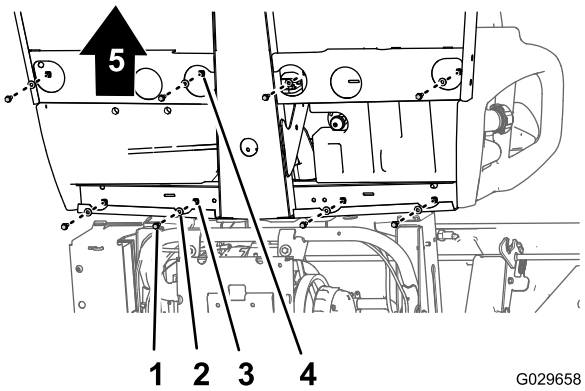

Figure 51

1. Flange-head bolt
2. Washer
3. Hole (rear-cab channel)
4. Hole (floor plate)
5. Front of the machine

2. Carefully lift the seats, seat base, and parking brake cables from the machine (Figure 51).

Important: **Note the routing of the parking-brake cables along the chassis as you lift the seats and seat base from the machine.**

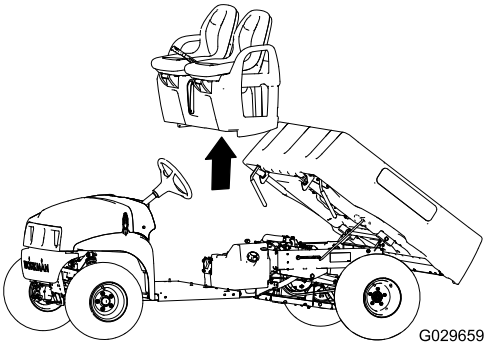

Figure 52

Replacing the Carbon Canister

1. Remove the vacuum hose from the fitting on the carbon canister marked Purge (Figure 53).

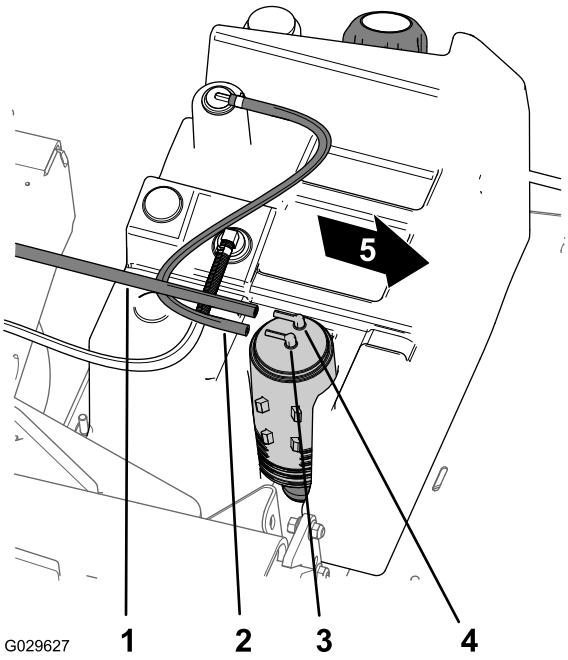

Figure 53

1. Vacuum hose
2. Fuel-tank hose
3. Carbon-canister fitting (Fuel Tank)
4. Carbon-canister fitting (Purge)
5. Front of the machine

2. Remove the fuel-tank hose from the fitting on the carbon canister marked Fuel Tank (Figure 53).
3. Lift the carbon canister from the carbon-canister mount in the fuel tank (Figure 54).

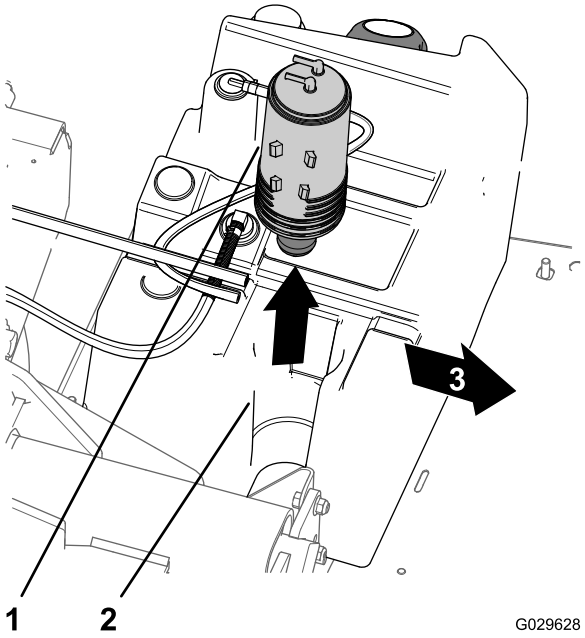

Figure 54

1. Carbon canister
2. Carbon-canister mount (fuel tank)
3. Front of the machine

4. Remove the carbon-canister filter and the short section of hose from the lower fitting of the old carbon canister (Figure 55).

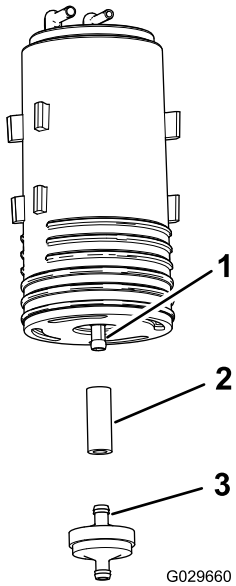

Figure 55

1. Lower fitting (carbon canister)
2. Hose
3. Carbon-canister filter

5. Install the hose onto the lower fitting of the new carbon canister (Figure 55).
6. Insert the fitting of a new carbon-canister filter into the hose (Figure 55).
7. Insert the new carbon canister into the carbon-canister mount of the fuel tank with the purge and fuel tank fittings aligned rearward (Figure 54).
8. Assemble the vacuum hose onto the fitting on the carbon canister marked Purge and the fuel-tank hose to the onto the fitting marked Fuel Tank (Figure 53).

Installing the Seats and Seat Base

1. Lift the seats and seat base onto the machine and align brake cables to the chassis (Figure 51 and Figure 52).
2. Align the holes in the seat base with the holes in the floor plate and rear-cab channel (Figure 51 and Figure 52).
3. Assemble the seat base to the floor plate and rear-cab channel with the 8 flange-head bolts and 8 washers that you removed in step 1 of Removing the Seats and Seat Bases (page 39) and torque the bolts to 1978 to 2542 N-cm (175 to 225 in-lb).

Installing the Parking Brake Cables

1. Route the threaded adjuster of the parking -brake cable to the brake-cable bracket and the clevis to the brake-actuating lever (Figure 50).
2. Secure the clevis to the brake-actuating lever with the clevis pin and cotter pin the you removed in step 4 of Disconnecting the Parking-Brake Cable (page 38).
3. Align the threaded adjuster of the parking -brake cable to the brake-cable bracket and tighten the rear-jam nut (Figure 50).

   Note: Ensure the you do not rotate the forward-jam nut.
4. Repeat steps 1 through 3 to the parking-brake cable at the other side of the machine.

Connecting the Controls at the Seat Base

1. Connect the electrical connector from the reverse switch that is located inside the gear shift bracket.
2. Align the holes in the shifter bracket to the holes in the seat base and secure the plate to the base with the 4 bolts that you removed in step 3 of Disconnecting the Controls at the Seat Base (page 38).
3. Align the holes in the shifter plate to the holes in the shifter bracket and secure the plate to the bracket with the 4 bolts that you removed in step 2 of Disconnecting the Controls at the Seat Base (page 38)
4. Thread the knob from the gear-shift lever and tighten the knob by hand (Figure 49).

Electrical System Maintenance

Servicing the Battery

Battery voltage: 12 volt with 300 cold cranking amps at -18° C (0° F).

WARNING

CALIFORNIA
Proposition 65 Warning

Battery posts, terminals, and related accessories contain lead and lead compounds, chemicals known to the State of California to cause cancer and reproductive harm. Wash hands after handling.

⚠ DANGER

Battery electrolyte contains sulfuric acid which is a deadly poison and causes severe burns.

- **Do not drink electrolyte or allow it to contact your skin, eyes or clothing. Wear safety glasses to shield your eyes and rubber gloves to protect your hands.**
- **Fill the battery where clean water is always available for flushing the skin.**

- Always keep the battery clean and fully charged.
- Always keep the battery clean and fully charged.
- If the battery terminals are corroded, clean them with a solution of 4 parts water and 1 part baking soda.
- Apply a light coating of grease to the battery terminals to prevent corrosion.

Disconnecting the Battery

⚠ WARNING

Incorrect battery cable routing could damage the vehicle and cables, causing sparks. Sparks can cause the battery gasses to explode, resulting in personal injury.

- **Always disconnect the negative (black) battery cable before disconnecting the positive (red) cable.**
- **Always connect the positive (red) battery cable before connecting the negative (black) cable.**
- **Always keep the battery strap in place to protect and secure the battery.**

⚠ WARNING

Battery terminals or metal tools could short against metal vehicle components, causing sparks. Sparks can cause the battery gasses to explode, resulting in personal injury.

- **When removing or installing the battery, do not allow the battery terminals to touch any metal parts of the vehicle.**
- **Do not allow metal tools to short between the battery terminals and metal parts of the vehicle.**

1. Squeeze the sides of the battery cover and remove the cover from the top of the battery (Figure 56).

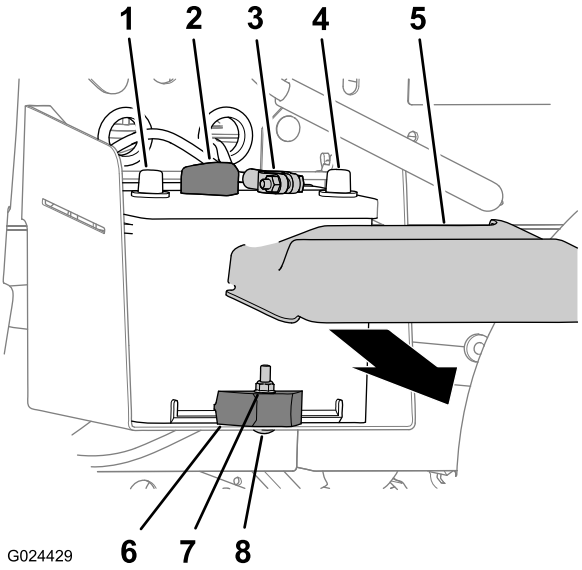

Figure 56

1. Positive-battery terminal
2. Positive-battery cable
3. Negative-battery cable
4. Negative-battery terminal
5. Battery cover
6. Locknut
7. Battery clamp
8. Carriage bolt

2. Disconnect the negative (black) battery cable from the terminal of the battery (Figure 56).
3. Disconnecting the positive (red) cable from the terminal of the battery (Figure 56).

Removing the Battery

1. Disconnect the battery cables; refer to Disconnecting the Battery (page 41).
2. Remove the locknut, carriage bolt, and battery clamp that secures the battery to the battery tray (Figure 56).
3. Remove the battery from the battery tray (Figure 56).

Installing the Battery

1. Align the battery to the battery tray of the machine (Figure 56).

   Note: Ensure that the positive and negative posts of the battery are aligned as shown in Figure 56.

2. Secure the battery to the battery tray with the battery clamp, carriage bolt, and locknut (Figure 56).

3. Connect the battery cables; refer to Connecting the Battery (page 42).

Connecting the Battery

1. Connect the positive (red) battery cable to the terminal of the battery (Figure 56).

2. Connect the negative (black) battery cable to the terminal of the battery (Figure 56).

3. Install the battery cover onto the top of the battery (Figure 56).

Charging the Battery

⚠ WARNING

Charging the battery produces gasses that can explode.

Never smoke near the battery and keep sparks and flames away from battery.

Important: Always keep the battery fully charged (1.260 specific gravity). This is especially important to prevent battery damage when the temperature is below 0° C (32° F).

1. Remove the battery from the machine; refer to Removing the Battery (page 41).

2. Connect a 3 to 4 amp battery charger to the battery posts. Charge the battery at a rate of 3 to 4 amp for 4 to 8 hours (12 volts).

   Note: Do not overcharge the battery.

3. Install the battery in the chassis; refer to Installing the Battery (page 42).

Storing the Battery

If the machine will be stored for more than 30 days, remove the battery and charge it fully. Either store it on the shelf or on the machine. Leave the cables disconnected if it is stored on the machine. Store the battery in a cool atmosphere to avoid quick deterioration of the charge in the battery. To prevent the battery from freezing, make sure it is fully charged.

Replacing the Fuses

There are 3 fuses in the electrical system. They are located beneath the dash on the driver's side (Figure 57).

Auxillary (Open)	30 A
Ignition System/Horn	10 A
Headlights	15 A
Power Point	20 A

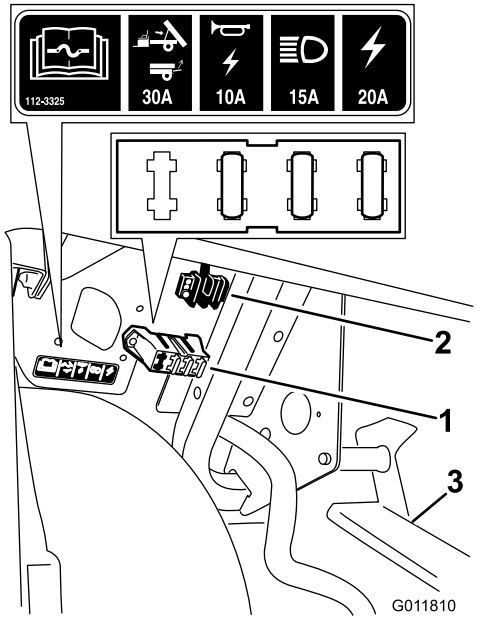

Figure 57

1. Fuse block
2. Ground block
3. Pedal assembly

Maintaining the Headlights

Replacing the Bulbs

⚠ CAUTION

The halogen bulbs become extremely hot when in operation. Handling a hot bulb can cause severe burns and personal injury.

Always allow enough time to for the bulbs to cool before replacing them. Use care whenever handling the bulb.

⚠ CAUTION

Any surface contamination can damage the headlight bulb and leading to its failure or explosion creating a serious safety hazard.

Head light lamps should be handled without touching the clear quartz, either by using a clean paper towel or carefully holding the base.

Specification: See your *Parts Catalog*.

1. Disconnect the battery; refer to Disconnecting the Battery (page 41).
2. Open the hood; refer to Raising the hood (page 28).
3. Disconnect the electrical connector for the harness from the connector of the lamp assembly at the back of the headlight housing (Figure 58).

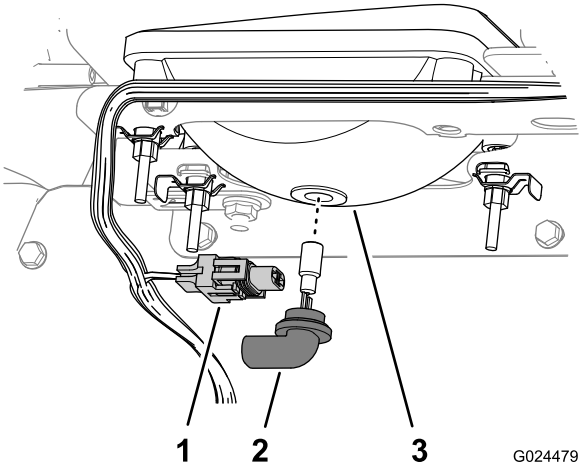

Figure 58

1. Harness-electrical connector
2. Lamp assembly
3. Headlight housing

4. Rotate the lamp assembly 1/4 turn counterclockwise and moving it rearward, out of the headlight housing (Figure 58).
5. Insert the new lamp assembly and headlight housing and align the tabs in the lamp assembly with the slots in the headlight housing (Figure 58).

   Note: Take care not to touch the halogen lamp when installing the new light bulb.
6. Secure lamp assembly by turning it 1/4 turn clockwise (Figure 58).
7. Connect the electrical connector for the harness to the connector of the new lamp assembly (Figure 58).
8. Connect the battery and close the hood; refer to Connecting the Battery (page 42).

Replacing the Headlight

1. Disconnect the battery; refer to Disconnecting the Battery (page 41).
2. Open the hood; refer to Closing the Hood (page 29).
3. Disconnect the electrical connector for the harness from the connector of the lamp assembly (Figure 59).

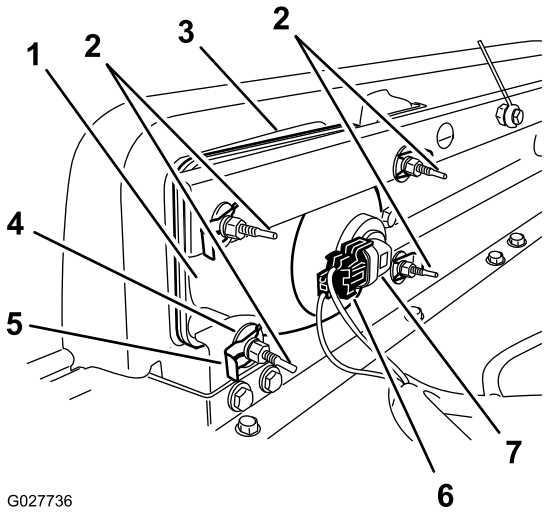

Figure 59

1. Headlight
2. Adjustment screw
3. Opening in the bumper
4. Flat washer
5. Speed clip
6. Harness-electrical connector
7. Lamp assembly

4. Remove the speed clips and washers that secure the headlight to the headlight bracket (Figure 59).

   Note: Retain all parts for installation of the new headlight.
5. Remove the headlight assembly by moving it forward through the opening in the front bumper (Figure 59).
6. Install the new headlight through the opening in the bumper (Figure 59).

   Note: Ensure the adjustment posts are lined up with the holes in the mounting bracket behind the bumper.
7. Secure the headlight assembly with the washers and speed clips that you removed in step 4.
8. Connect the electrical connector for the harness to the connector of the lamp assembly (Figure 59).
9. Adjust the headlights to direct the beams to the desired position, refer to Adjusting the Headlights (page 43).

Adjusting the Headlights

Use the following procedure to adjust the headlight beam position whenever a headlight assembly is replaced or removed.

1. Turn the starter key to the On position, and turn on the headlights.
2. At the back of the headlight assembly, rotate adjustment screws (Figure 59) to pivot the headlight assembly and align the position of the cast beam.

3. Connect the battery and close the hood; refer to Connecting the Battery (page 42).

Drive System Maintenance

Maintaining the Tires

Service Interval: Every 100 hours—Check the condition of the tires and rims.

Every 100 hours—Torque the wheel-lug nuts.

1. Inspect the tires an rims for signs of wear and damage.

   Note: Operating accidents, such as hitting curbs, can damage a tire or rim and also disrupt wheel alignment, so inspect tire condition after an accident.

2. Torque the wheel-lug nuts to 108 to 122 N-m (80 to 90 ft-lb).

Adjusting the Front Wheel Toe-in and Camber

Service Interval: Every 100 hours/Yearly (whichever comes first)—Check the front wheel toe-in and camber.

Important: You will need to obtain tool number TORO 6010 from your Toro Distributor to perform this procedure.

The toe-in should be 0 to 6 mm (0 to 1/4 inch) and the camber should be 0+1/2 degree, i.e., the bottom of the wheel rims angled in 2.3 mm (0.09 inch) more than the top, with the following parameters:

- Check the tire pressure to ensure that the front tires are inflated to 82 kPa (12 psi).
- Either, add weight to the driver's seat equal to the average operator who will run the machine, or have an operator sit on the seat. The weight or operator must remain on the seat for the duration of the procedure.
- On a level surface, roll the machine straight back 2 to 3 m (6 to 10 ft) and then straight forward to the original starting position. This will allow the suspension to settle into the operating position.
- Measure the toe-in with the wheels facing straight ahead.

1. To check the camber, place a 90 degree square on the ground with the vertical edge touching the face of the tire (Figure 60).

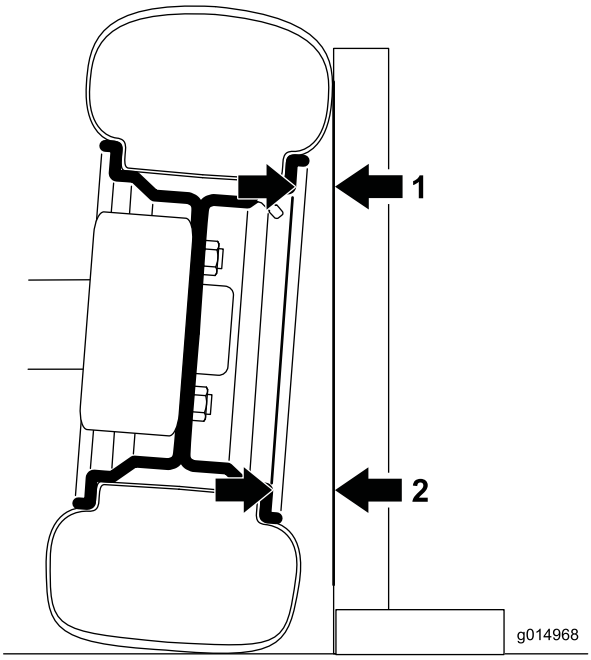

Figure 60

Left, front wheel shown from the front; the angle is exaggerated for illustrative purposes

1. Measure here
2. Measure here—should be 2.3 mm (0.09 inch) larger than the measurement at 1

2. Measure from the same part of the rim on the top and bottom of the tire to the square (Figure 60).

   Note: The distance of the bottom measurement should be 2.3 mm (0.09 inch) larger than the top measurement. Complete the measurement on both front tires before adjusting.

   Complete the following procedure for each tire that needs adjusting:

3. Using tool TORO 6010, rotate the collar on the shock absorber to change the length of the spring (Figure 61).
   - If the bottom measurement was too short, reduce the length of the spring.
   - If the bottom measurement was too long, increase the length of the spring.

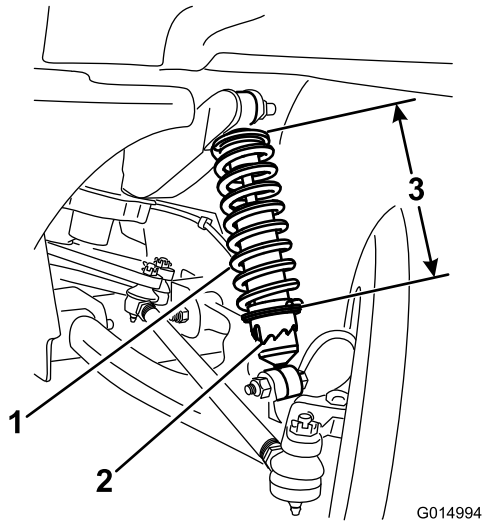

Figure 61

1. Shock-absorber spring
2. Collar
3. Spring length

4. On a level surface, roll the machine straight back 2 to 3 m (6 to 10 ft) and then straight forward to the original starting position.
5. Repeat this procedure, starting with step 1 until the camber is set correctly for both front wheels.
6. Measure the distance between both of the front tires at the axle height at both the front and rear of the front tires (Figure 62).

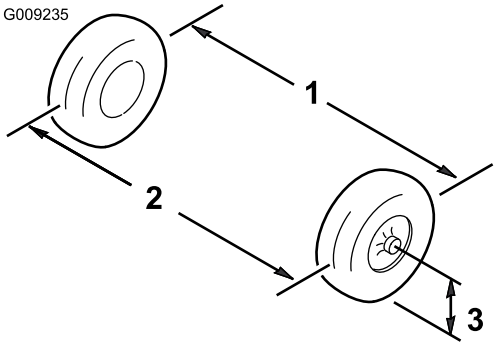

Figure 62

1. Tire center line—back
2. Tire center line—front
3. Axle center line

7. If the measurement does not fall within 0 to 6 mm (0 to 1/4 inch), loosen the jam nuts at both ends of the tie rods (Figure 63).

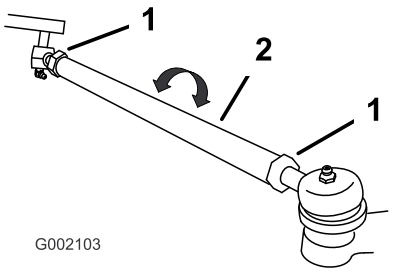

Figure 63

1. Jam nut
2. Tie rod

8. Rotate both tie rods to move the front of the tire inward or outward.
9. Tighten the tie rod jam nuts when the adjustment is correct.
10. Ensure that there is full travel of the steering wheel in both directions.

Checking the Transaxle Oil Level

Service Interval: Every 100 hours

Oil Type: SAE 10W30 (API service SJ or higher)

1. Move the machine to a level surface, shut off the engine, set the parking brake, and remove the starter key.
2. Remove the bolt from the level indicating hole (Figure 64).

   Note: The transaxle fluid level should be at the bottom of the level indicator hole.

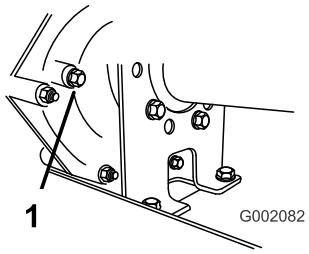

Figure 64

1. Level indicator hole

3. If the transaxle oil is not level with the bottom of the level indicating hole, fill the reservoir with the specified oil; refer to steps 7 through 10 in Changing the Transaxle Oil (page 46).

Changing the Transaxle Oil

Service Interval: Every 800 hours/Yearly (whichever comes first)

Oil Type: SAE 10W30 (API service SJ or higher)

Oil Capacity: 1.4 L (1.5 qt)

1. Position the vehicle on a level surface, set the parking brake, rotate the On/Off switch to the Off position, and remove the key.
2. Wipe the area around the fill and drain plugs clean with a rag (Figure 65).

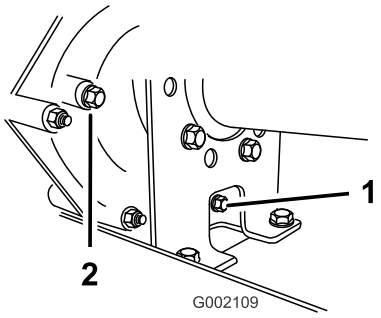

Figure 65

1. Drain plug
2. Fill plug

3. Align a drain pan with a capacity of 2 L (2.1 qt) or more under the drain plug.
4. Remove the fill plug by rotating it counterclockwise (Figure 65).

   Note: Retain the fill plug and gasket for installation in step 8.
5. Remove the drain plug by rotating it counterclockwise (Figure 65).

   Note: Retain the drain plug and gasket for installation in step 6.

   Note: Allow the oil to drain from the transaxle completely.
6. Install and tighten the drain plug and gasket into the drain-plug hole of the transmission (Figure 65).

   Note: Dispose of the used oil at a certified recycling center.
7. Fill the reservoir (Figure 66) through the fill-plug hole with of the specified oil or until the oil level in the transmission is even with the bottom of the threads. (Figure 65).

   Note: The approximately reservoir capacity is 1.4 L (1-1/2 qt).

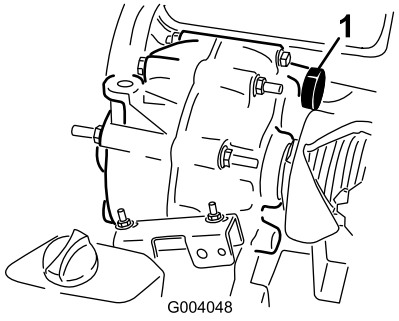

Figure 66

1. Oil fill

8. Install and tighten the fill plug and gasket into the fill-plug hole of the transmission (Figure 65).
9. Start the engine and operate the machine.
10. Check the oil level and add more oil if the level is below the threads of the fill-plug hole (Figure 65).

Checking and Adjusting Neutral

Service Interval: Every 100 hours

When performing routine maintenance and/or engine diagnostics, the transaxle must be shifted into neutral (Figure 67). The vehicle has a neutral position on the shift lever, which controls the neutral in the transaxle. The following steps should be taken to make sure that the neutral shift lever operates the transaxle neutral correctly:

1. Set the shift lever into the Neutral position.
2. Ensure that the neutral bracket is in the neutral position (level to the cable mounting bracket located below the shift bracket) by turning the driven clutch (Figure 67).

   Note: The vehicle should not roll back and forth. If it does, manually move the neutral bracket to the Neutral position.

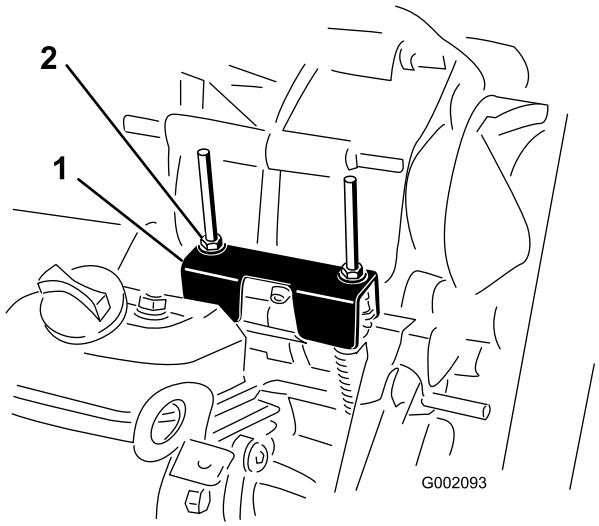

Figure 67

1. Neutral bracket
2. Locknuts

3. Rotate one of the locknuts (Figure 67) to achieve a 0.762 to 1.524 mm (0.030 to 0.060 inch) gap between the bottom of the nut/washer and the neutral bracket.

   Note: You must hold the threaded shaft below the bracket when adjusting the locknut position on top.
4. Rotate the other locknut to achieve a 0.76 to 1.52 mm (0.03 to 0.06 inch) gap between the bottom of the nut/washer and the neutral bracket.
5. Pull up on each shift cable an ensure that there is a 0.76 to 1.52 mm (0.03 to 0.06 inch) between the nut/washer and the neutral bracket (Figure 68).

   Note: If there is a not a gap, adjust the nuts to achieve the specified gap.

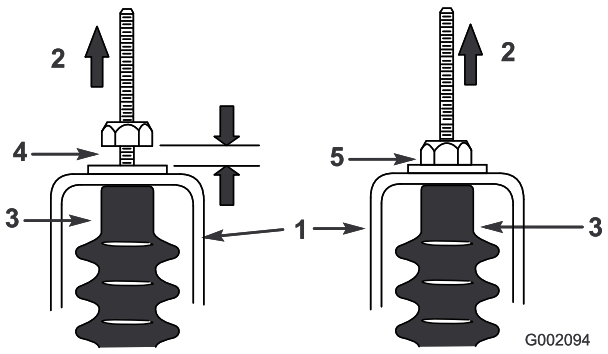

Figure 68

1. Neutral bracket
2. Pull up
3. Cable boot
4. 0.76 to 1.52 mm (0.03 to 0.06 inch) gap
5. **Wrong**—adjust the to achieve a gap of 0.76 to 1.52 mm (0.03 to 0.06 inch) inch

6. Start the engine and shift into Forward, Reverse, and Neutral several times to ensure that the neutral bracket is operating properly.

Maintaining the Primary-Drive Clutch

Service Interval: Every 400 hours/Yearly (whichever comes first)

⚠ CAUTION

The dust in the clutch will become airborne and could damage your eyes or you could inhale it causing breathing difficulties.

Wear safety goggles and a dust mask or other eye and respiratory protection when performing this procedure.

1. Raise the cargo box and secure it with the prop rod; refer to; refer to Raising the Cargo Box (page 17).
2. Remove the 3 bolts securing the cover to the clutch, and remove the cover (Figure 69).

   Note: Retain the cover and bolts for installation.

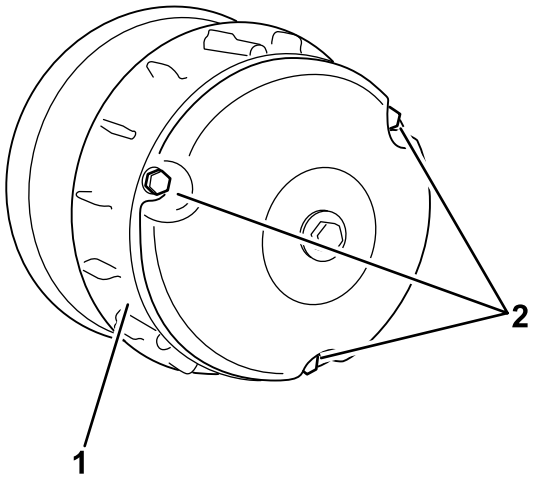

Figure 69

1. Cover
2. Bolts

3. Thoroughly clean the inside of the cover and the inner components of the clutch using compressed air.
4. Install the clutch cover and secure it with the 3 bolts (Figure 69) that you removed in 2.
5. Lower the cargo box; refer to Lowering the Cargo Box (page 18).

Cooling System Maintenance

Cleaning the Engine Cooling Areas

Service Interval: Every 100 hours Clean the cooling system twice as often during special operating conditions; refer to Maintaining the Vehicle under Special Operating Conditions.

Important: Operating the engine with a blocked rotating screen, dirty or plugged cooling fins, or cooling shrouds removed will cause engine damage due to overheating.

Important: Never clean the engine with a pressure washer because water could contaminate the fuel system.

Clean the rotating screen, cooling fins, and external surfaces of the engine.

Note: Clean the engine cooling components more often under extremely dusty and dirty conditions.

Brake Maintenance

Inspecting the Brakes

Service Interval: Every 100 hours

Brakes are a critical safety component of the machine. As with all safety components, they should be closely inspected at regular intervals to ensure optimum performance and safety.

- Inspect the brake shoes for wear or damage. If the lining (brake pad) thickness is less than 1.6 mm (1/16 inch), the brake shoes should be replaced.
- Inspect the backing plate and other components for signs of excessive wear or deformation. If any deformation is found, the appropriate components must be replaced.
- Check the brake fluid level; refer to Checking the Brake Fluid Level (page 19).

Adjusting the Parking-Brake Handle

Service Interval: Every 200 hours

1. Remove the hand grip from the parking-brake lever (Figure 70).

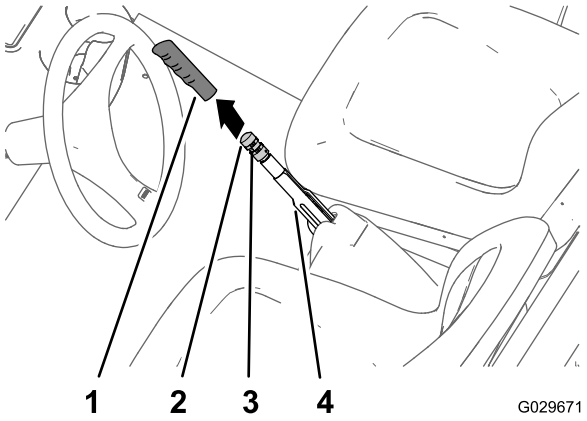

Figure 70

1. Hand grip
2. Brake-adjustment knob
3. Set screw
4. Parking-brake lever

2. Loosen the set screw securing the brake-adjustment knob to the parking-brake lever (Figure 70).
3. Rotate the brake-adjustment knob until a force of 133 to 156 N-m (30 to 35 ft-lb) is required to set the parking-brake lever (Figure 70).

   Note: If you rotated the brake-adjustment knob the full travel of the adjuster and cannot attain the force of 133 to 156 N-m (30 to 35 ft-lb) is required to set the parking-brake lever, perform the procedure for adjusting the brake cables; refer to Adjusting the Brake Cables (page 49).
4. Tighten the set screw and install the hand grip (Figure 70).

Adjusting the Brake Cables

1. Remove the hand grip from the parking brake (Figure 70).
2. Loosen the set screw (Figure 70) securing the brake-adjustment knob to the parking-brake lever, release the parking brake, and loosen the brake-adjustment knob.
3. At the bottom of the machine, loosen the rear-jam nut for the threaded adjuster of the parking-brake cable 4 turns (Figure 71).

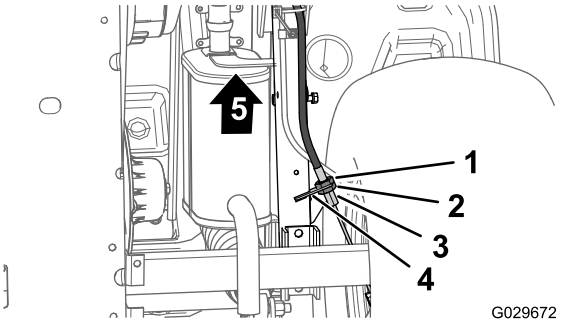

Figure 71

1. Forward-jam nut
2. Rear-jam nut
3. Brake-cable bracket
4. Threaded adjuster (parking-brake cable)
5. Front of the machine

4. Tighten the forward jam nut (Figure 71).
5. Rotate the brake-adjustment knob (Figure 70) until a force of 133 to 156 N-m (30 to 35 ft-lb) is required to set the parking-brake lever.
   - If you cannot adjust the brake-adjustment knob by **loosening** it and set the parking-brake lever with a a force of 133 to 156 N-m (30 to 35 ft-lb); perform the following:
     A. Loosen the forward-jam nut (Figure 71) for the threaded adjuster of the parking-brake cable 1 turn.
     B. Tighten the rear jam nut (Figure 71).
     C. Rotate the brake-adjustment knob (Figure 70) until a force of 133 to 156 N-m (30 to 35 ft-lb) is required to set the parking-brake lever.
     D. Repeat steps A through C up to 2 more times to attain the parking brake force between 133 to 156 N-m (30 to 35 ft-lb).
   - If you cannot adjust the brake-adjustment knob by **tightening** it and set the parking-brake lever with a a force of 133 to 156 N-m (30 to 35 ft-lb); perform the following:
     A. Loosen the rear-jam nut (Figure 71) for the threaded adjuster of the parking-brake cable 1 turn.
     B. Tighten the forward jam nut (Figure 71).

C. Rotate the brake-adjustment knob (Figure 70) until a force of 133 to 156 N-m (30 to 35 ft-lb) is required to set the parking-brake lever.

D. Repeat steps A through C up to 3 more times to attain the parking brake force between 133 to 156 N-m (30 to 35 ft-lb).

Note: If you cannot adjust the parking-brake cable enough to get the brake-adjustment knob within its adjustment range, check the brake pads for excessive wear.

- Tighten the set screw and install the hand grip (Figure 70).

Changing the Brake Fluid

Service Interval: Every 1,000 hours

Refer to your authorized Authorized Service Dealer.

Belt Maintenance

Servicing the Drive Belt

Checking the Drive Belt

Service Interval: After the first 8 hours

Every 200 hours

1. Park the machine on a level surface, set the parking brake, rotate the On/Off switch to the Off position, and remove the key.
2. Raise the cargo box and secure it with the prop rod; refer to Raising the Cargo Box (page 17).
3. Shift the transmission into Neutral.
4. Rotate and inspect the belt (Figure 72) for signs of excessive wear or damage.

   Note: Replace the belt if it is excessively worn or damaged; refer to .

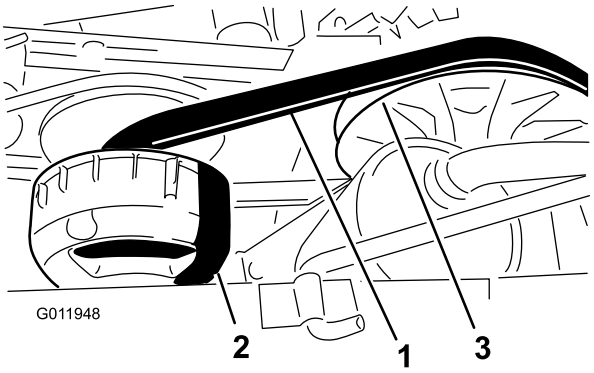

Figure 72

1. Drive belt
2. Primary clutch
3. Secondary clutch

5. Lower the cargo box; refer to Lowering the Cargo Box (page 18).

Replacing the Drive Belt

1. Raise the cargo box and secure it with the prop rod; refer to; refer to Raising the Cargo Box (page 17).
2. Shift the transmission into Neutral, set the parking brake, rotate the On/Off switch to the Off position, and remove the key.
3. Rotate and route the belt over the secondary clutch (Figure 72).
4. Remove the belt from the primary clutch (Figure 72).

   Note: Discard the old belt.
5. Align the new belt over the primary clutch (Figure 72).
6. Rotate and route the belt over the secondary clutch (Figure 72).

7. Lower the cargo box; refer to Lowering the Cargo Box (page 18).

Adjusting the Starter-Generator Belt

Service Interval: After the first 8 hours

Every 200 hours

1. Raise the cargo box and secure it with the prop rod; refer to; refer to Raising the Cargo Box (page 17).
2. Loosen the pivot nut for the starter generator (Figure 73).

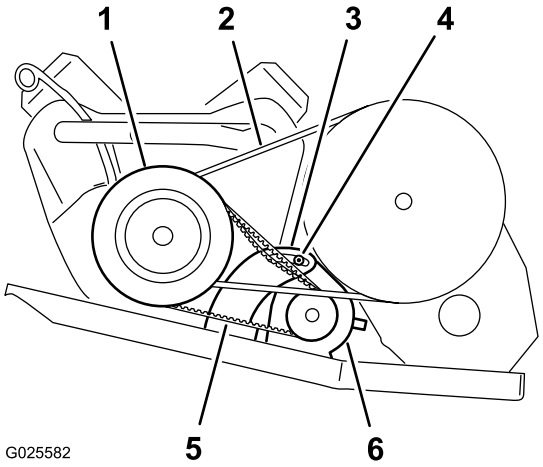

Figure 73

1. Primary drive clutch housing
2. Drive belt
3. Generator-pivot bracket
4. Pivot nut
5. Starter-generator belt
6. Starter generator

3. Align a pry bar between the engine mount and starter.
4. Apply downward pressure to the pry bar to rotate the starter down in the slot until the belt tension only allows 6 mm (1/4 inch) belt deflection with 44 N (10 lb) of force (Figure 73).
5. Tighten the pivot nut hand tight, and remove the pry bar (Figure 73).
6. Torque the pivot nut to 88 to 115 N-m (65 to 85 ft-lb).
7. Lower the cargo box; refer to Lowering the Cargo Box (page 18).

Chassis Maintenance

Adjusting the Cargo-Box Latches

If the cargo-box latch is out of adjustment, the cargo box vibrates up and down as you drive the vehicle. You can adjust the latch posts to make the latches hold the cargo box snugly to the chassis.

1. Loosen the locknut on the end of the latch post (Figure 74).

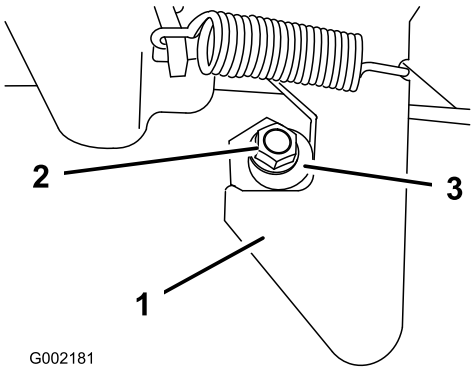

Figure 74

1. Latch
2. Locknut
3. Latch post

2. Rotate the latch post clockwise until it is snug against the hook portion of the latch (Figure 74).
3. Torque the locknut to 19.7 to 25.4 N-m (175 to 225 in-lb).
4. Repeat this steps 1 through 3 for the latch on the other side of the vehicle.

Cleaning

Washing the Machine

The machine should be washed as needed. Use water alone or with a mild detergent. A rag may be used when washing the machine, however the hood will loose some of its luster.

Important: Do not use power washing equipment to wash the machine. Power washing equipment may damage the electrical system, loosen important decals, or wash away necessary grease at friction points. Avoid excessive use of water near the control panel, engine, and battery.

Storage

1. Position the machine on a level surface, set the parking brake, rotate the On/Off switch to the Off position, and remove the key.
2. Clean the dirt and grime from the entire machine, including the outside of the cylinder-head fins of the engine and blower housing.

   Important: You can wash the machine with mild detergent and water. Do not use power washing equipment to wash the machine. Pressure washing the machine may damage the electrical system or wash away necessary grease at friction points. Avoid excessive use of water near the control panel, lights, engine, and the battery.
3. Inspect the brakes; refer to Inspecting the Brakes (page 49).
4. Service the air cleaner; refer to Servicing the Air Filter (page 32).
5. Grease the machine; refer to Lubrication (page 29).
6. Change the engine oil; refer to Changing the Oil (Models 07266TC and 07279) (page 34) and Changing the Oil (Models 07273 and 07273TC) (page 35).
7. Check the tire pressure; refer to Checking the Tire Air Pressure (page 21).
8. For storage over 30 days, prepare the fuel system as follows:
   A. Add a petroleum based fuel stabilizer/conditioner to fuel in the tank.

      Important: Do not store stabilizer/conditioned gasoline over 90 days

      Follow mixing instructions from fuel stabilizer manufacturer. (1 oz per gallon).

      Important: Do not use an alcohol based fuel stabilizer (ethanol or methanol).

      Note: The use of fuel stabilizer/conditioner is most effective when mixed with fresh gasoline and used at all times.

   B. Run the engine to distribute conditioned fuel through the fuel system (5 minutes).

   C. Shut off the engine, allow the engine to cool, and drain the fuel tank.

      Note: Dispose of fuel properly. Recycle as according to local codes.

   D. Start the engine again and run it until it stops.

   E. Choke the engine.

   F. Start and run the engine until it will not start again.
9. Remove the spark plugs and check their condition; refer to Checking and Replacing the Spark Plug (page 36).

10. With the spark plugs removed from the engine, pour 2 tablespoons of engine oil into the spark plug hole.
11. Use the electric starter to crank the engine and distribute the oil inside the cylinder.
12. Install the spark plug(s) and tighten it to recommended torque; refer to Checking and Replacing the Spark Plug (page 36).

    Note: Do not install the wire on the spark plug(s).
13. Remove the battery from the chassis, and charge it fully; refer to Removing the Battery (page 41).

    Note: Do not connect the battery cables to the battery posts during storage.

    Important: The battery must be fully charged to prevent it from freezing and being damaged at temperatures below 0° C (32° F). A fully charged battery maintains its charge for about 50 days at temperatures lower than 4° C (40° F).
14. Check and tighten all bolts, nuts, and screws. Repair or replace any part that is damaged.
15. Paint all scratched or bare metal surfaces.

    Note: Paint is available from your Authorized Service Dealer.
16. Store the machine in a clean, dry garage or storage area.
17. Remove the key from the On/Off switch and put it in a safe place out of the reach of children.
18. Cover the machine to protect it and keep it clean.

Notes:

International Distributor List

Distributor:	Country:	Phone Number:	Distributor:	Country:	Phone Number:
Agrolanc Kft	Hungary	36 27 539 640	Maquiver S.A.	Colombia	57 1 236 4079
Balama Prima Engineering Equip.	Hong Kong	852 2155 2163	Maruyama Mfg. Co. Inc.	Japan	81 3 3252 2285
B-Ray Corporation	Korea	82 32 551 2076	Mountfield a.s.	Czech Republic	420 255 704 220
Casco Sales Company	Puerto Rico	787 788 8383	Mountfield a.s.	Slovakia	420 255 704 220
Ceres S.A.	Costa Rica	506 239 1138	Munditol S.A.	Argentina	54 11 4 821 9999
CSSC Turf Equipment (pvt) Ltd.	Sri Lanka	94 11 2746100	Norma Garden	Russia	7 495 411 61 20
Cyril Johnston & Co.	Northern Ireland	44 2890 813 121	Oslinger Turf Equipment SA	Ecuador	593 4 239 6970
Cyril Johnston & Co.	Republic of Ireland	44 2890 813 121	Oy Hako Ground and Garden Ab	Finland	358 987 00733
Equiver	Mexico	52 55 539 95444	Parkland Products Ltd.	New Zealand	64 3 34 93760
Femco S.A.	Guatemala	502 442 3277	Perfetto	Poland	48 61 8 208 416
ForGarder OU	Estonia	372 384 6060	Pratoverde SRL.	Italy	39 049 9128 128
G.Y.K. Company Ltd.	Japan	81 726 325 861	Prochaska & Cie	Austria	43 1 278 5100
Geomechaniki of Athens	Greece	30 10 935 0054	RT Cohen 2004 Ltd.	Israel	972 986 17979
Golf international Turizm	Turkey	90 216 336 5993	Riversa	Spain	34 9 52 83 7500
Guandong Golden Star	China	86 20 876 51338	Lely Turfcare	Denmark	45 66 109 200
Hako Ground and Garden	Sweden	46 35 10 0000	Solvert S.A.S.	France	33 1 30 81 77 00
Hako Ground and Garden	Norway	47 22 90 7760	Spypros Stavrinides Limited	Cyprus	357 22 434131
Hayter Limited (U.K.)	United Kingdom	44 1279 723 444	Surge Systems India Limited	India	91 1 292299901
Hydroturf Int. Co Dubai	United Arab Emirates	97 14 347 9479	T-Markt Logistics Ltd.	Hungary	36 26 525 500
Hydroturf Egypt LLC	Egypt	202 519 4308	Toro Australia	Australia	61 3 9580 7355
Irrimac	Portugal	351 21 238 8260	Toro Europe NV	Belgium	32 14 562 960
Irrigation Products Int'l Pvt Ltd.	India	0091 44 2449 4387	Valtech	Morocco	212 5 3766 3636
Jean Heybroek b.v.	Netherlands	31 30 639 4611	Victus Emak	Poland	48 61 823 8369

European Privacy Notice

The Information Toro Collects
Toro Warranty Company (Toro) respects your privacy. In order to process your warranty claim and contact you in the event of a product recall, we ask you to share certain personal information with us, either directly or through your local Toro company or dealer.

The Toro warranty system is hosted on servers located within the United States where privacy law may not provide the same protection as applies in your country.

BY SHARING YOUR PERSONAL INFORMATION WITH US, YOU ARE CONSENTING TO THE PROCESSING OF YOUR PERSONAL INFORMATION AS DESCRIBED IN THIS PRIVACY NOTICE.

The Way Toro Uses Information
Toro may use your personal information to process warranty claims, to contact you in the event of a product recall and for any other purpose which we tell you about. Toro may share your information with Toro's affiliates, dealers or other business partners in connection with any of these activities. We will not sell your personal information to any other company. We reserve the right to disclose personal information in order to comply with applicable laws and with requests by the appropriate authorities, to operate our systems properly or for our own protection or that of other users.

Retention of your Personal Information
We will keep your personal information as long as we need it for the purposes for which it was originally collected or for other legitimate purposes (such as regulatory compliance), or as required by applicable law.

Toro's Commitment to Security of Your Personal Information
We take reasonable precautions in order to protect the security of your personal information. We also take steps to maintain the accuracy and current status of personal information.

Access and Correction of your Personal Information
If you would like to review or correct your personal information, please contact us by email at legal@toro.com.

Australian Consumer Law

Australian customers will find details relating to the Australian Consumer Law either inside the box or at your local Toro Dealer.

Toro General Commercial Product Warranty

A Two-Year Limited Warranty

Conditions and Products Covered

The Toro Company and its affiliate, Toro Warranty Company, pursuant to an agreement between them, jointly warrant your Toro Commercial product ("Product") to be free from defects in materials or workmanship for two years or 1500 operational hours*, whichever occurs first. This warranty is applicable to all products with the exception of Aerators (refer to separate warranty statements for these products). Where a warrantable condition exists, we will repair the Product at no cost to you including diagnostics, labor, parts, and transportation. This warranty begins on the date the Product is delivered to the original retail purchaser.
* Product equipped with an hour meter.

Instructions for Obtaining Warranty Service

You are responsible for notifying the Commercial Products Distributor or Authorized Commercial Products Dealer from whom you purchased the Product as soon as you believe a warrantable condition exists. If you need help locating a Commercial Products Distributor or Authorized Dealer, or if you have questions regarding your warranty rights or responsibilities, you may contact us at:

Toro Commercial Products Service Department
Toro Warranty Company
8111 Lyndale Avenue South
Bloomington, MN 55420-1196

952–888–8801 or 800–952–2740
E-mail: commercial.warranty@toro.com

Owner Responsibilities

As the Product owner, you are responsible for required maintenance and adjustments stated in your *Operator's Manual*. Failure to perform required maintenance and adjustments can be grounds for disallowing a warranty claim.

Items and Conditions Not Covered

Not all product failures or malfunctions that occur during the warranty period are defects in materials or workmanship. This warranty does not cover the following:

- Product failures which result from the use of non-Toro replacement parts, or from installation and use of add-on, or modified non-Toro branded accessories and products. A separate warranty may be provided by the manufacturer of these items.
- Product failures which result from failure to perform recommended maintenance and/or adjustments. Failure to properly maintain your Toro product per the Recommended Maintenance listed in the *Operator's Manual* can result in claims for warranty being denied.
- Product failures which result from operating the Product in an abusive, negligent, or reckless manner.
- Parts subject to consumption through use unless found to be defective. Examples of parts which are consumed, or used up, during normal Product operation include, but are not limited to, brake pads and linings, clutch linings, blades, reels, rollers and bearings (sealed or greasable), bed knives, spark plugs, castor wheels and bearings, tires, filters, belts, and certain sprayer components such as diaphragms, nozzles, and check valves, etc.
- Failures caused by outside influence. Conditions considered to be outside influence include, but are not limited to, weather, storage practices, contamination, use of unapproved fuels, coolants, lubricants, additives, fertilizers, water, or chemicals, etc.
- Failure or performance issues due to the use of fuels (e.g. gasoline, diesel, or biodiesel) that do not conform to their respective industry standards.
- Normal noise, vibration, wear and tear, and deterioration.
- Normal "wear and tear" includes, but is not limited to, damage to seats due to wear or abrasion, worn painted surfaces, scratched decals or windows, etc.

Parts

Parts scheduled for replacement as required maintenance are warranted for the period of time up to the scheduled replacement time for that part. Parts replaced under this warranty are covered for the duration of the original product warranty and become the property of Toro. Toro will make the final decision whether to repair any existing part or assembly or replace it. Toro may use remanufactured parts for warranty repairs.

Deep Cycle and Lithium-Ion Battery Warranty:

Deep cycle and Lithium-Ion batteries have a specified total number of kilowatt-hours they can deliver during their lifetime. Operating, recharging, and maintenance techniques can extend or reduce total battery life. As the batteries in this product are consumed, the amount of useful work between charging intervals will slowly decrease until the battery is completely worn out. Replacement of worn out batteries, due to normal consumption, is the responsibility of the product owner. Battery replacement may be required during the normal product warranty period at owner's expense. Note: (Lithium-Ion battery only): A Lithium-Ion battery has a part only prorated warranty beginning year 3 through year 5 based on the time in service and kilowatt hours used. Refer to the *Operator's Manual* for additional information.

Maintenance is at Owner's Expense

Engine tune-up, lubrication, cleaning and polishing, replacement of filters, coolant, and completing recommended maintenance are some of the normal services Toro products require that are at the owner's expense.

General Conditions

Repair by an Authorized Toro Distributor or Dealer is your sole remedy under this warranty.

Neither The Toro Company nor Toro Warranty Company is liable for indirect, incidental or consequential damages in connection with the use of the Toro Products covered by this warranty, including any cost or expense of providing substitute equipment or service during reasonable periods of malfunction or non-use pending completion of repairs under this warranty. Except for the Emissions warranty referenced below, if applicable, there is no other express warranty. All implied warranties of merchantability and fitness for use are limited to the duration of this express warranty.

Some states do not allow exclusions of incidental or consequential damages, or limitations on how long an implied warranty lasts, so the above exclusions and limitations may not apply to you. This warranty gives you specific legal rights, and you may also have other rights which vary from state to state.

Note regarding engine warranty:

The Emissions Control System on your Product may be covered by a separate warranty meeting requirements established by the U.S. Environmental Protection Agency (EPA) and/or the California Air Resources Board (CARB). The hour limitations set forth above do not apply to the Emissions Control System Warranty. Refer to the Engine Emission Control Warranty Statement supplied with your product or contained in the engine manufacturer's documentation for details

Countries Other than the United States or Canada

Customers who have purchased Toro products exported from the United States or Canada should contact their Toro Distributor (Dealer) to obtain guarantee policies for your country, province, or state. If for any reason you are dissatisfied with your Distributor's service or have difficulty obtaining guarantee information, contact the Toro importer.

374-0253 Rev C