Form No. 3396-212 Rev A

TORO®

Count on it.

Parts Catalog

Groundsmaster® 360

4-Wheel Drive Multi-Purpose Machine

Model No. 31200—Serial No. 315000501 and Up

Register at www.Toro.com.
Original Instructions (EN)

3396-212 A

Ordering Replacement Parts

To order replacement parts, please supply the part number, the quantity, and the description of each part desired.

Understanding Reference Numbers

Each identified part in an illustration has a reference number. The reference number for a part also appears in the parts list, along with other information about the part.

This catalog uses two special reference number formats, one to indicate parts in a service assembly and another to indicate the quantity of a given part in an illustration.

Service Assembly Reference Numbers

Parts in service assemblies have reference numbers in the form a:b. The a represents the reference number of the entire service assembly and the b represents a sequential number unique to each part within the service assembly.

For example, a wheel assembly might be identified by reference number 6, the tire by 6:1, the valve by 6:2, and the wheel by 6:3. When you order the assembly identified by reference number 6, you receive all parts identified by reference numbers 6:1,6:2, and 6:3. However, you may also order any part individually. Reference numbers of this type appear in illustration and in parts lists.

Reference Numbers Indicating Quantity

In an illustration, if a reference number indicates more than one part, the reference number has the form nX y. The n represents the quantity of the part, the X is the multiplication symbol, and the y represents the reference number.

For example, in an illustration, the reference number 2X 37 means that two of the parts identified by reference number 37 are indicated.

List of Abbreviations

AR: as required

ASM: assembly

BBC: blade brake control

BHTF: button head thread forming

CARR: carriage

CCW: counter clockwise

CW: clockwise

DEG: degrees

DPA: Dual Point Adjustment

ECM: electronic control module

EXT: external

FH: flat head

GA: gauge

HD: heavy-duty

HF: hex flange

HH: hex head

HHF: hex head flange

HHFTF: hex head flange thread forming

HJ: hex jam

HLH: hex lag head

HOC: height-of-cut

HP: high pressure

HSBH: hex socket button head

HSFH: hex socket flat head

HSH: hex socket head

HWH: hex washer head

HWHTF: hex washer head thread forming

HYD: hydraulic

LH: left hand

LP: low pressure

LPG: Liquefied Petroleum Gas

NI: nylon insert

NPTF: national pipe thread fine

PFH: phillips flat head

PPH: phillips pan head

PPHTF: phillips pan head thread forming

PRH: phillips round head

PTH: phillips truss head

PTO: power-take-off

RH: right hand

ROPS: roll-over protection system

RRB: rear roller brush

SFH: slotted fillister head

SHH: slotted hex head

SHWH: slotted hex washer head

SPH: slotted pan head

SQH: square head

SRH: slotted round head

STD: standard

TAP: self tapping

TTH: torx truss head

Contents

Frame and Rear Axle Assembly . . . 5
Lift Shaft and Linkage Assembly . . . 6
Hydraulic Cylinder Assembly No. 110-9834 . . . 7
Platform and Roll-Over Protection System Assembly . . . 8
Rear Frame Components Assembly . . . 9
4 Wheel Drive Steering Assembly . . . 10
Front Cover Assembly . . . 11
Front Axle and Tie Rod Assembly . . . 12
Rear Steering Assembly . . . 14
Hydraulic Cylinder Assembly No.125-2835 . . . 16
Steering Column Assembly . . . 17
Steering Column Assembly No. 117-3371 . . . 18
Steering Valve Assembly No. 130-7948 . . . 19
Fuel Tank and Control Panel Component Assembly . . . 20
Fuel Tank Assembly No. 131-1920 . . . 21
Seat Plate Assembly . . . 22
Seat Assembly . . . 23
Seat Assembly No. 107-2286 . . . 24
Seat Platform Assembly . . . 25
4 Wheel Drive Module Control and Relay Assembly . . . 26
Brake Pedal Assembly . . . 27
Wheel and Brake Assembly . . . 28
Left Hand Brake Assembly No. 120-0235 . . . 29
Right Hand Brake Assembly No. 120-0233 . . . 30
4 Wheel Drive Hydraulic Motor and Fitting Assembly . . . 31
Hydraulic Motor Assembly No. 117-3284 (CCW) . . . 32
Hydraulic Motor Assembly No. 117-3285 (CW) . . . 33
Engine Assembly . . . 34
Transmission Component Assembly . . . 35
Charge Pump Housing Assembly Transmission Assembly No. 125-9290 . . . 36
Center Section Assembly Transmission Assembly No. 125-9290 . . . 38
Gear Case and Clutch Assembly Transmission Assembly No. 125-9290 . . . 40
Driveshaft Assembly No. 110-3575 . . . 42
Radiator Component Assembly . . . 43
Radiator and Cooler Assembly . . . 44
Muffler Assembly . . . 45
Battery and Fuel Delivery Assembly . . . 46
Air Cleaner Assembly . . . 47
Neutral System Assembly . . . 48
Traction Pedal Assembly . . . 50
Hood Assembly . . . 51
Deck Lift Valve and Hydraulic Fitting Assembly . . . 52
Hydraulic Gear Pump Assembly No. 115-0375 . . . 54
Valve Assembly No. 131-1934 . . . 55
4 Wheel Drive Hydraulic Hose Assembly . . . 56
Hydraulic Valve Assembly . . . 58
Steering Selector Valve Assembly No. 115-0280 . . . 59
Cross-Trax Traction Valve Assembly No. 117-2247 . . . 60
Steering and Traction Hose Assembly . . . 61
Electrical Assembly . . . 62
Cylinder Block Assembly . . . 63
Gear Housing Assembly . . . 64
Flywheel Housing and Oil Sump Assembly . . . 65
Suction Manifold Assembly . . . 66

© 2015—The Toro® Company
8111 Lyndale Avenue South
Bloomington, MN 55420

Contact us at www.Toro.com.
Printed in the USA.
All Rights Reserved

Contents (continued)

Exhaust Manifold Assembly 68
Cylinder Head and Cover Assembly 70
Diesel Particulate Filter Assembly 72
Camshaft and Driving Gear Assembly 74
Crankshaft and Piston Assembly 75
Cooling Water System Assembly 76
Lubrication and Oil System Assembly 78
Fuel System Assembly 79
Fuel Injection Valve Assembly 80
Fuel Pipe Assembly 81
Starting Motor Assembly 82
Generator Assembly 83
Electronic Control Unit Assembly 84
Electric Parts Assembly 85
Gasket Set 86
Attachments and Accessories 88

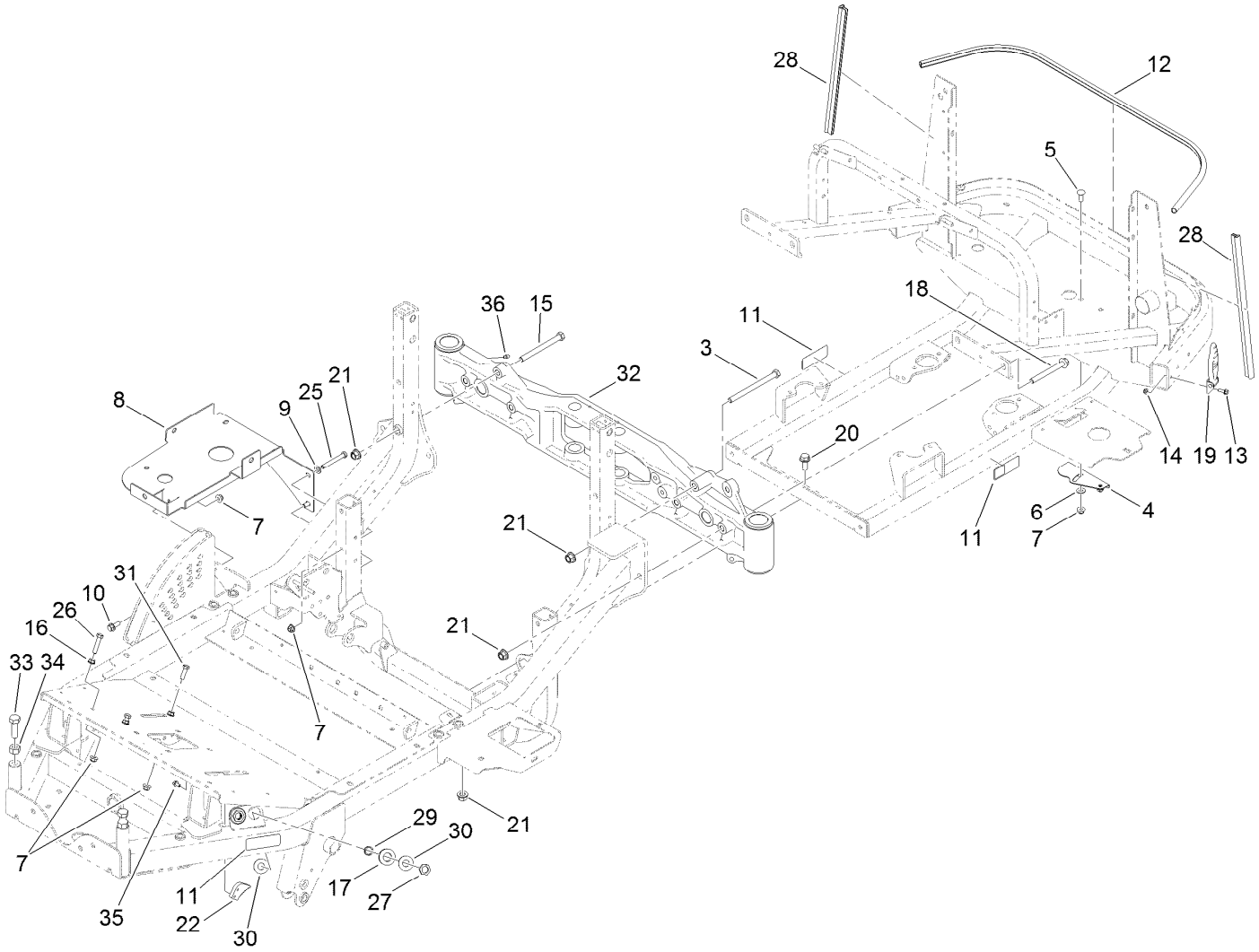

Frame and Rear Axle Assembly

Ref.	Part Number	Qty.	Description
3	325-33	1	Screw-HH
4	117-3190	1	Cover-Lower
5	3231-22	2	Screw-CARR
6	66-2920	2	Washer-Friction
7	104-8301	8	Nut-Flange, NI
8	117-3385-03	1	Bracket-Tank, HYD
9	3256-24	2	Washer-Flat
10	3234-24	1	Screw-HHF
11	106-9206	4	Decal-Torque, Wheel
12	117-3311	1	Seal-Bulb
13	3234-4	2	Screw-HHF
14	104-7201	2	Nut-Flange, NI
15	325-22	1	Screw-HH
16	3290-357	3	Nut-HHF, Whiz
17	240-4	2	Grommet-Rubber
18	117-3176	4	Screw-HHF

Ref.	Part Number	Qty.	Description
19	103-2898	2	Latch-Rubber
20	3234-38	3	Screw-HHF
21	99-5107	9	Nut-Lock
22	99-7214	1	Pawl-Brake
25	323-14	2	Screw-HH
26	323-53	2	Screw-HH
27	340-70	2	Nut-Lock
28	107-2269	2	Seal-Bulb
29	69-8970	2	Spacer
30	69-8940	4	Washer
31	323-7	1	Screw-HH
32	131-1931	1	Rear Axle ASM
33	327-6	2	Screw-HH
34	3217-11	2	Nut-Hex
35	3234-13	2	Screw-HHF
36	302-5	2	Fitting-Grease

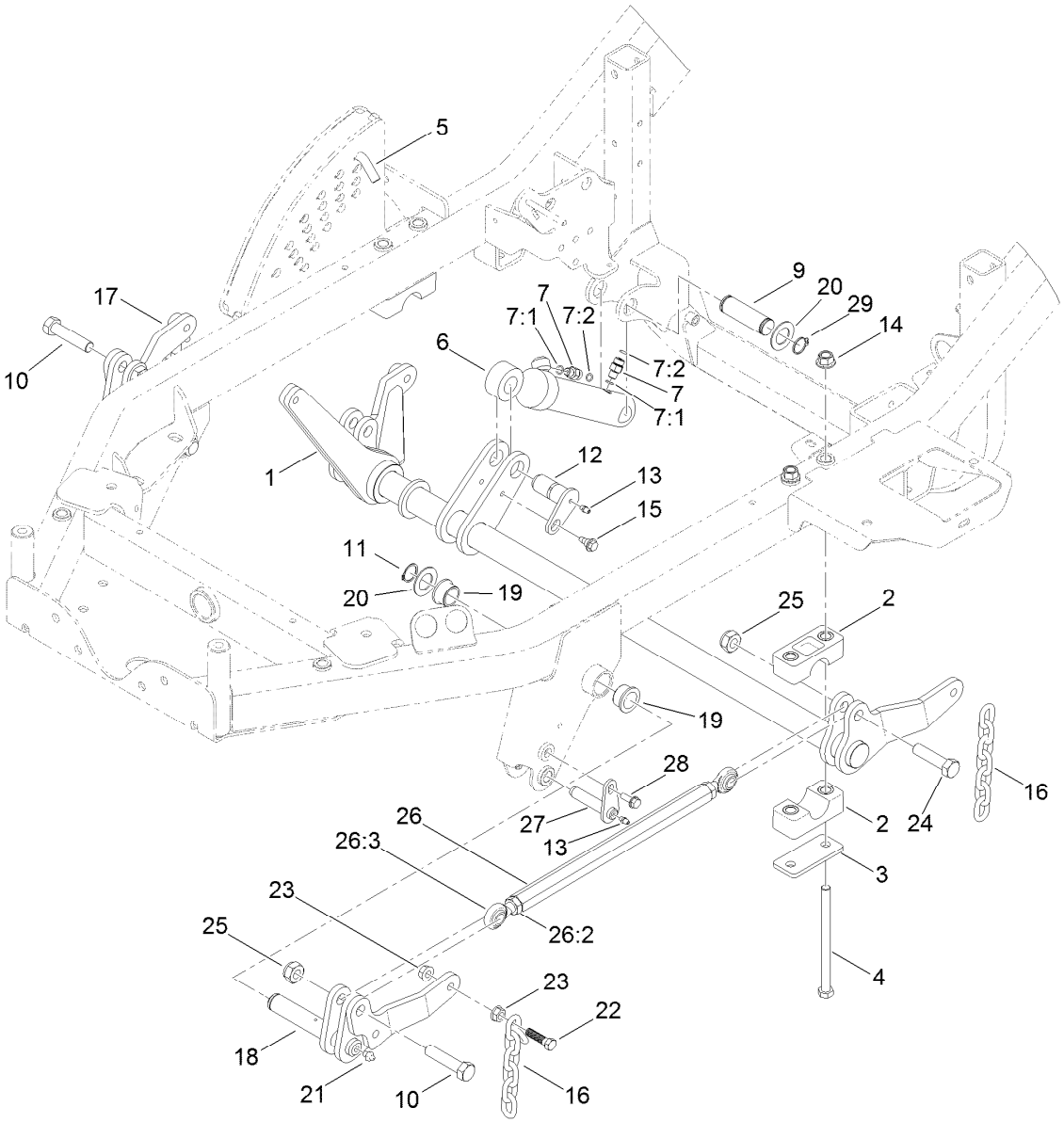

Lift Shaft and Linkage Assembly

Ref.	Part Number	Qty.	Description
1	115-0190-03	1	Shaft-Lift
2	115-0491	4	Cap-Bearing
3	117-2903	2	Plate-Bearing
4	325-37	4	Screw-HH
5	112-9544	1	Pin-HOC
6	110-9834	1	HYD Cylinder ASM
7	340-92	2	Fitting-HYD, Straight
7:1	237-78	1	O-Ring
7:2	237-21	1	O-Ring
9	115-0183	1	Shaft-Cylinder, Lift
10	327-8	2	Screw-HH
11	32151-29	2	Ring-Retaining
12	125-1910	1	Pin-Pivot
13	302-5	3	Fitting-Grease
14	99-5107	4	Nut-Lock
15	99-5105	1	Bolt-Shoulder

Ref.	Part Number	Qty.	Description
16	119-1385	4	Chain-HOC
17	119-1380-03	1	Lift-RH
18	119-1383-03	1	Lift-LH
19	114-5680	4	Bushing-Flange
20	69-9010	4	Washer
21	302-2	2	Fitting-Grease
22	103-1898	4	Screw-HH
23	32128-37	8	Nut-HF
24	327-7	2	Screw-HH
25	3296-61	4	Nut-Lock
26	114-4059	2	Link ASM
26:2	3220-6	2	Nut-Jam
26:3	1-633029	2	Balljoint-Spherical
27	112-1602	2	Pin-Retainer
28	32144-41	2	Screw-Taptite
29	32151-36	2	Ring-Retaining

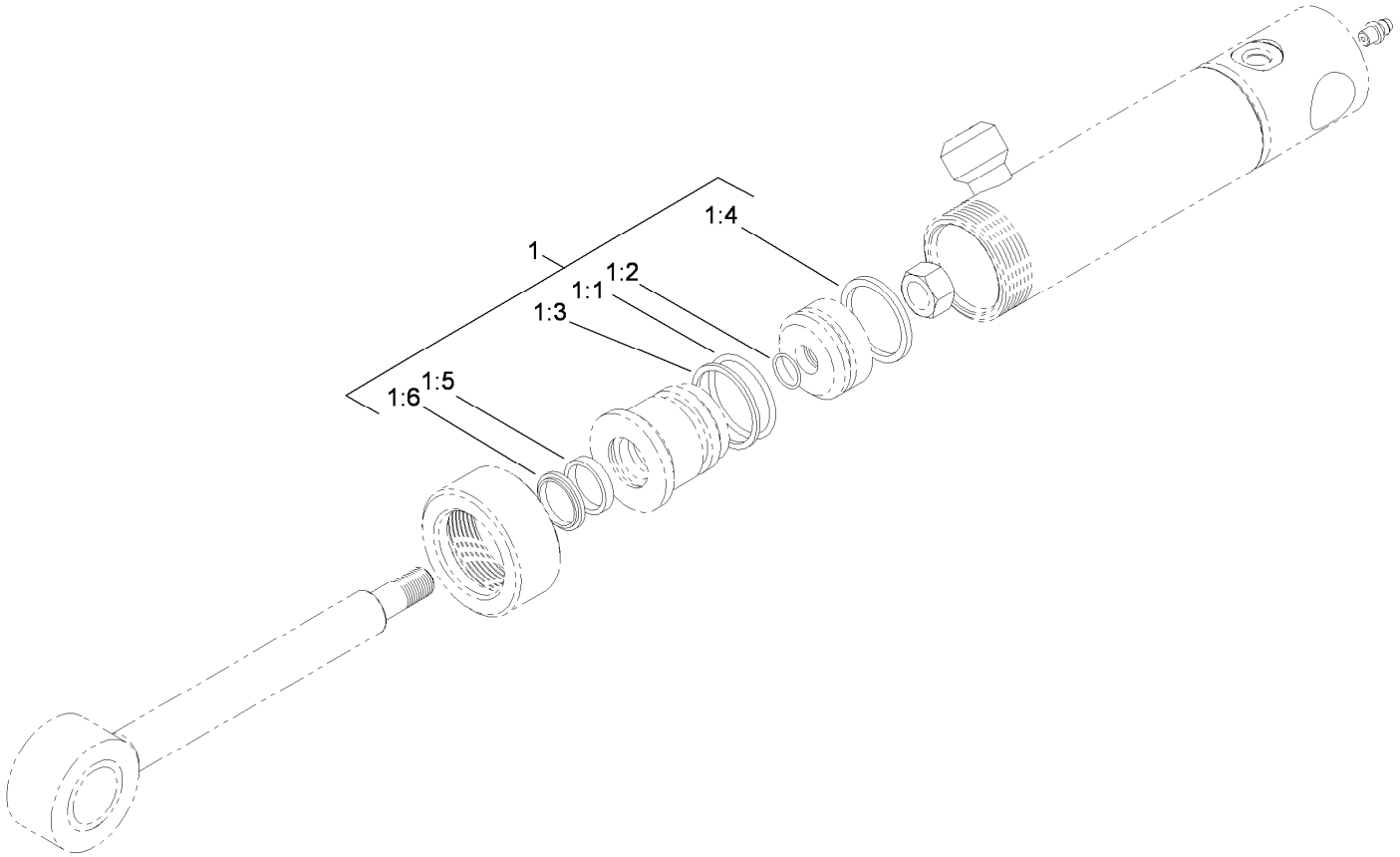

Hydraulic Cylinder Assembly No. 110-9834

Ref.	*Part Number*	*Qty.*	*Description*
1	112-6353	1	Seal Kit
1:1		1	O-Ring ●
1:2		1	O-Ring ●
1:3		1	Backup ●
1:4		1	Seal-Bp ●
1:5		1	Seal-Rod ●
1:6		1	Seal-Dust ●

● Not serviced separately

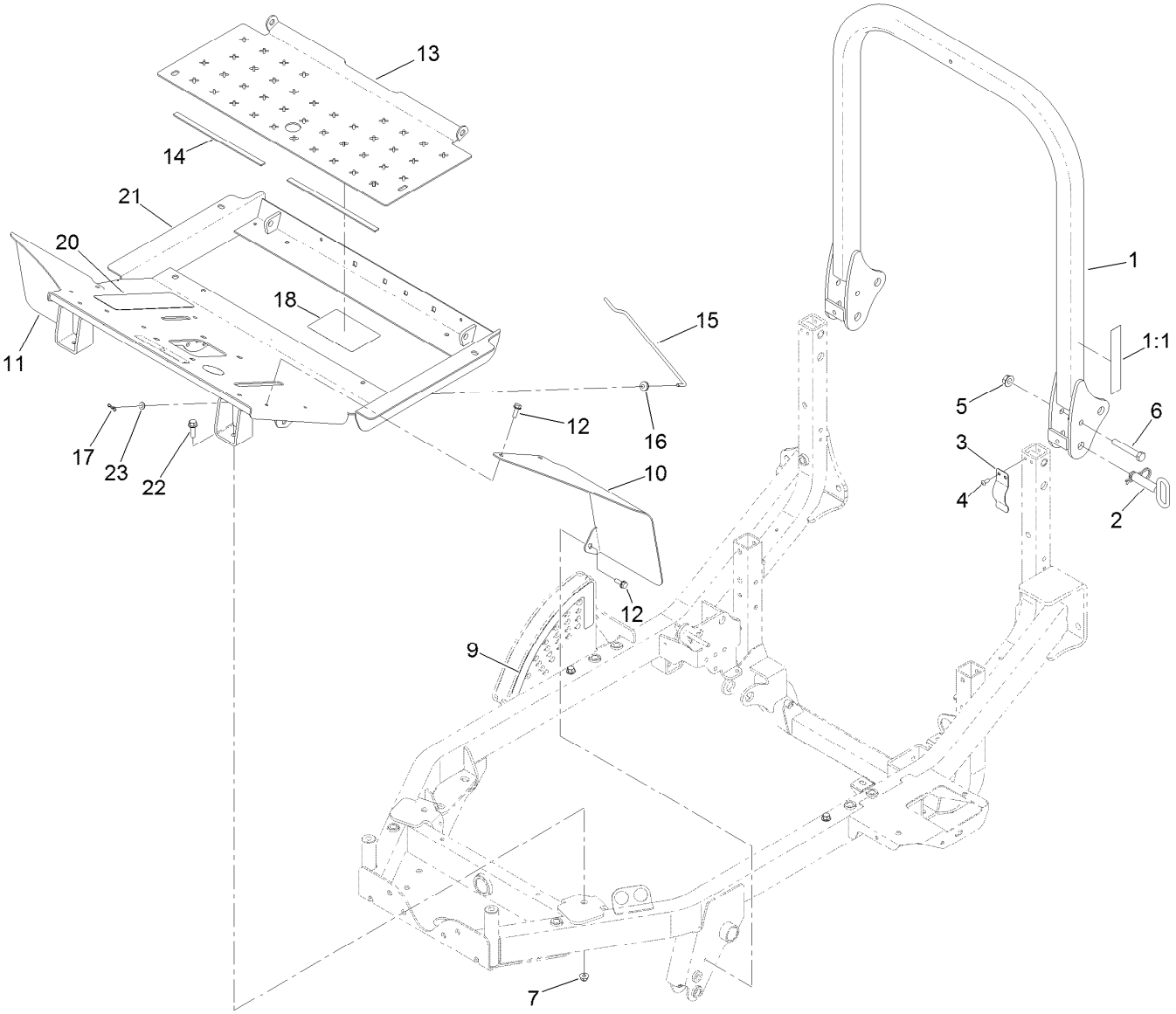

Platform and Roll-Over Protection System Assembly

Ref.	Part Number	Qty.	Description
1	127-6520	1	ROPS ASM
1:1	117-3272	1	Decal-Danger, ROPS
2	103-4553	2	Pin-Fold, ROPS
3	110-5696	2	Spring-Leaf
4	3290-412	4	Rivet
5	32128-23	2	Nut-HF
6	112-7264	2	Screw-HH
7	104-8301	2	Nut-Flange, NI
9	115-0492	1	Decal-HOC
10	117-3203-03	1	Fender-Front, LH
11	117-3202-03	1	Fender-Front, RH

Ref.	Part Number	Qty.	Description
12	32144-41	6	Screw-Taptite
13	117-3204-03	1	Plate-Floor
14	115-8827	2	Foam-Strip
15	110-9847	1	Rod-Prop
16	237-141	1	Grommet-Rubber
17	119-1414	1	Pin-Cotter, Locking
18	112-1461	1	Decal-Routing, Belt
20	71-0440	1	Abrasive-Pedal
21	119-1398-01	1	Platform
22	3234-24	4	Screw-HHF
23	3256-22	1	Washer-Flat

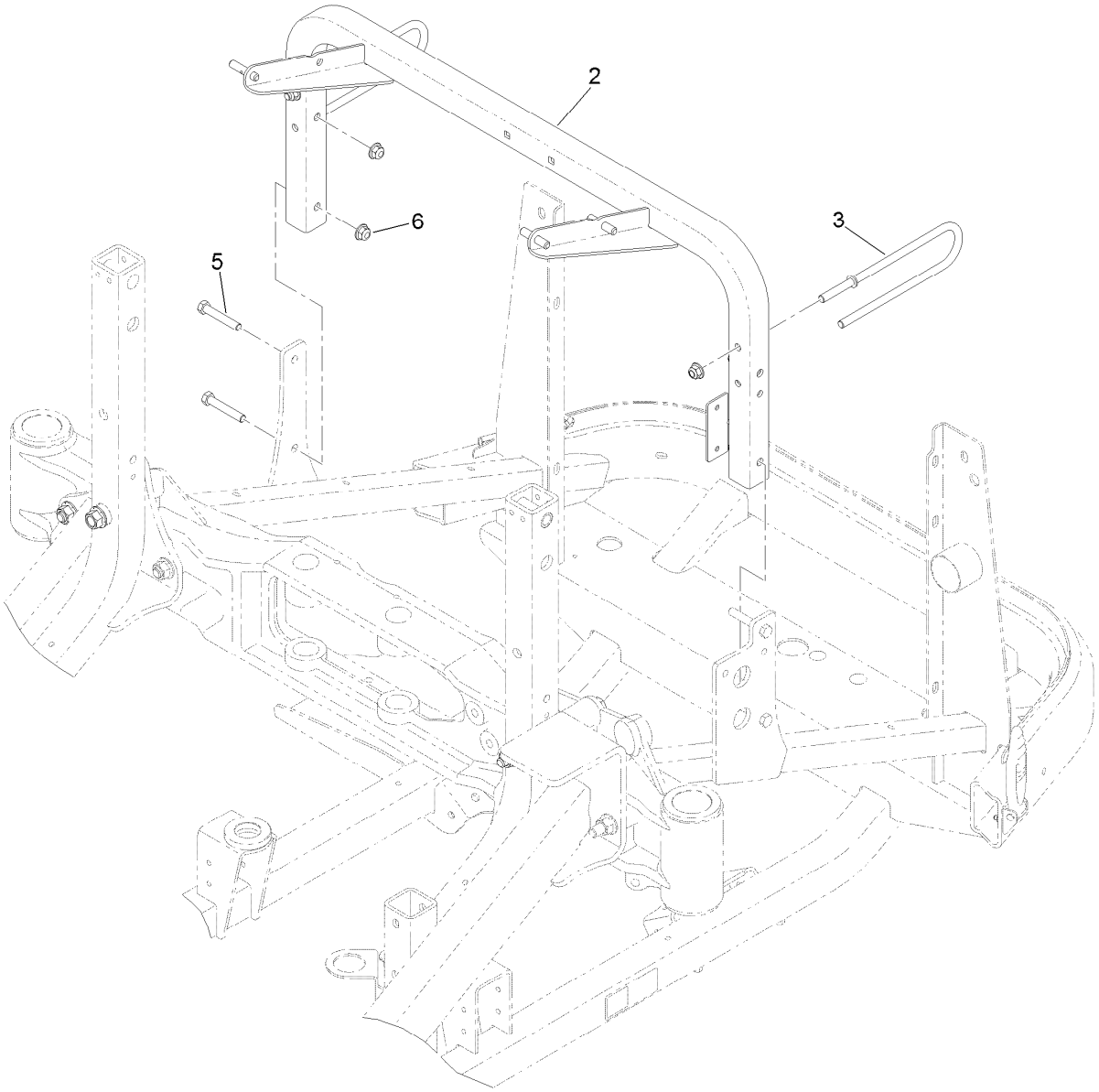

Rear Frame Components Assembly

Ref.	*Part Number*	*Qty.*	*Description*
2	125-9202-03	1	Tube-Cross
3	127-4853	2	Guide-Hose
5	323-45	4	Screw-HH
6	104-8301	6	Nut-Flange, NI

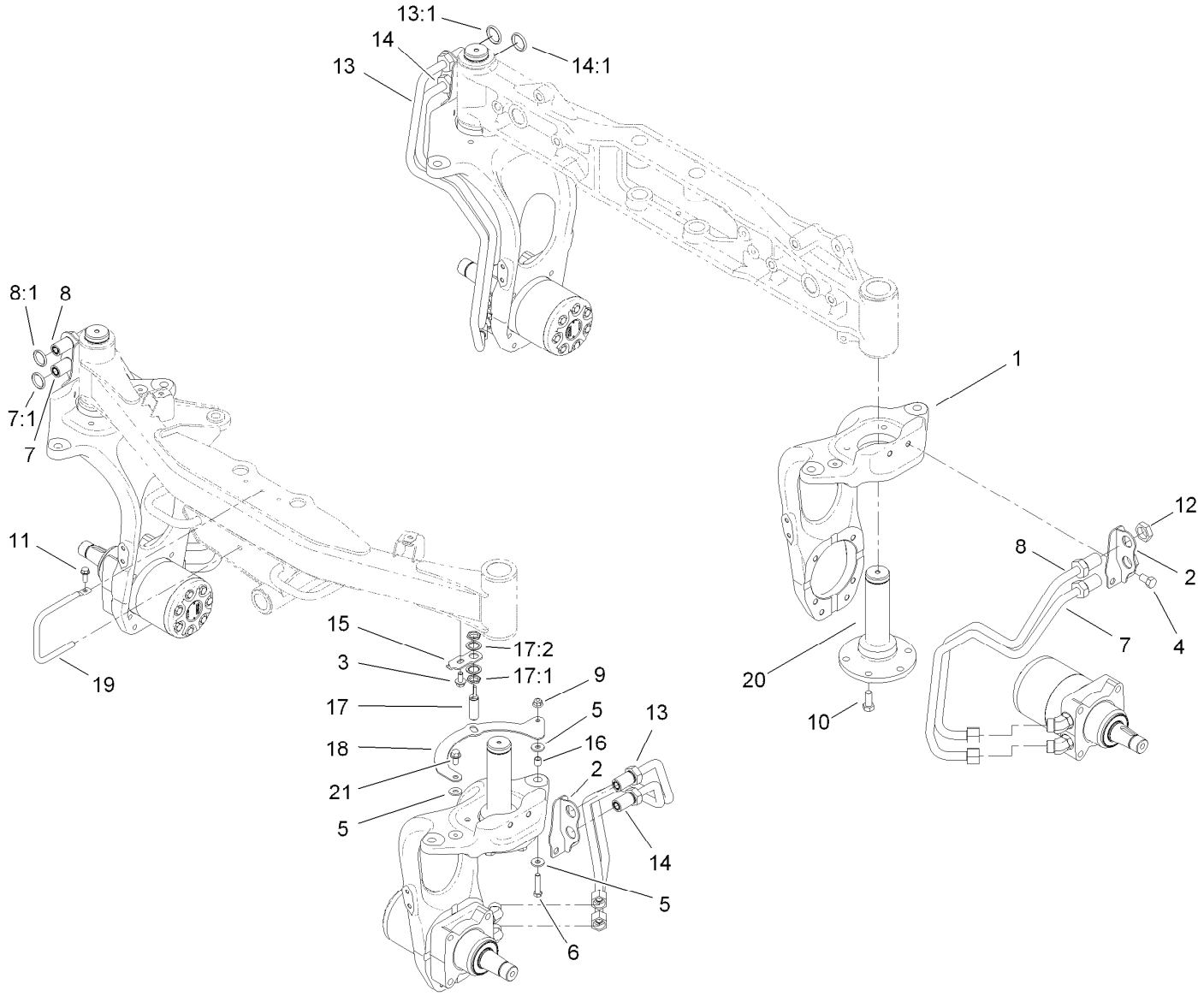

4 Wheel Drive Steering Assembly

Ref.	Part Number	Qty.	Description
1	117-2951	4	Base-Fork, Steer
2	119-1410-03	4	Bracket-Bulkhead
3	110-9380	1	Screw-HWH
4	325-3	8	Screw-HH
5	5-0838	3	Washer
6	32128-21	1	Nut-HF
7	117-2948	2	Upper Tube ASM (Lrrf)
7:1	237-65	1	O-Ring
8	117-2949	2	Lower Tube ASM (Lrrf)
8:1	237-65	1	O-Ring
9	323-8	1	Screw-HH
10	117-3266	20	Screw-HH
11	32144-41	1	Screw-Taptite
12	340-74	8	Nut-Lock, Bulkhead

Ref.	Part Number	Qty.	Description
13	117-2946	2	Upper Tube ASM (Rrlf)
13:1	237-65	1	O-Ring
14	117-2947	2	Lower Tube ASM (Rrlf)
14:1	237-65	1	O-Ring
15	119-1413	1	Bracket-Sensor
16	103-1166	1	Spacer-Tube, Pump Link
17	115-5300	1	Proximity Switch ASM
17:1	117-3207	2	Nut-Hex
17:2	117-3208	2	Washer-Lock, Internal Tooth
18	117-2216-03	1	Bracket-Target
19	117-3178	1	Rod-Guide
20	117-3361	4	Spindle-Steer
21	3234-47	1	Screw-HHF

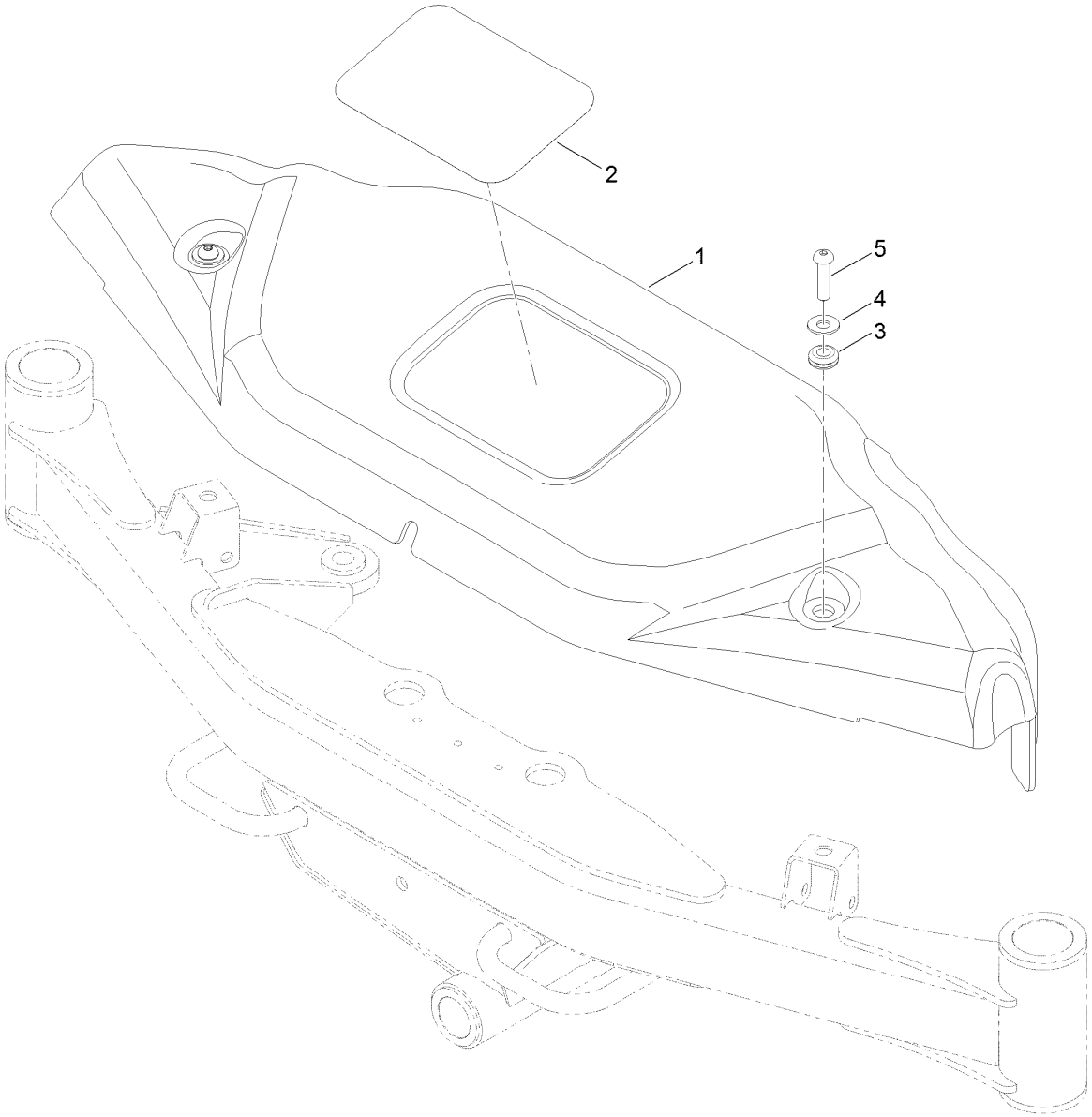

Front Cover Assembly

Ref.	Part Number	Qty.	Description
1	125-2828	1	Cover-Front
2	104-7213	1	Decal
3	1-633630	2	Grommet
4	100-7403	2	Washer-Flat
5	95-3857	2	Screw-HSBH

Front Axle and Tie Rod Assembly

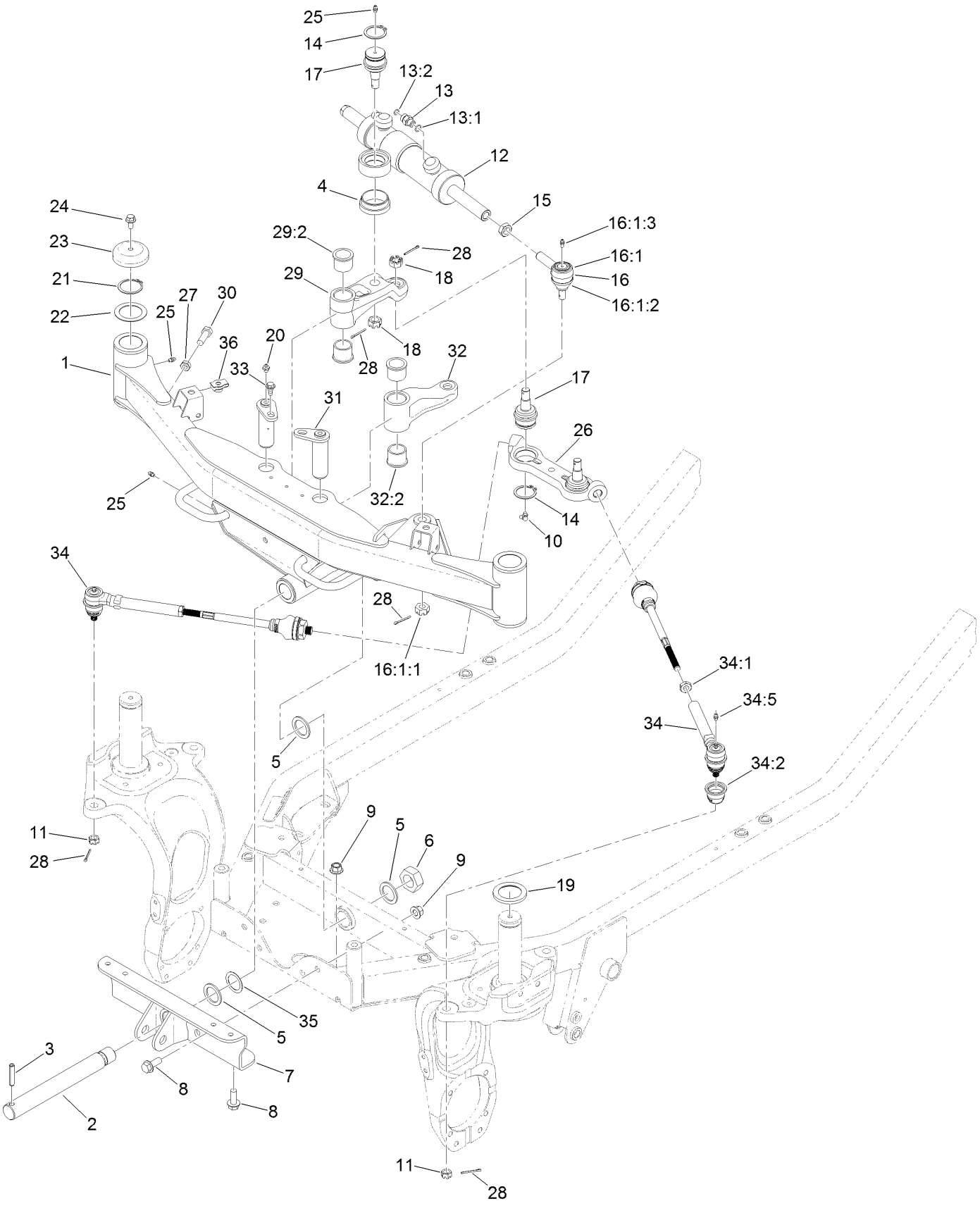

Front Axle and Tie Rod Assembly (continued)

Ref.	Part Number	Qty.	Description
1	125-2825	1	Front Axle ASM
2	119-1376	1	Shaft-Pivot
3	32121-110	1	Pin-Roll, Slotted
4	120-0238	1	Spacer-Cylinder
5	98-1452	3	Washer-Thrust
6	3296-68	1	Nut-Lock, NI
7	117-2920-03	1	Support-Axle
8	3234-38	6	Screw-HHF
9	99-5107	6	Nut-Lock
10	302-60	2	Fitting-Grease
11	32136-3	2	Nut-SHH
12	125-2835	1	HYD Cylinder ASM
13	340-2	2	Fitting-HYD, Straight
13:1	237-22	1	O-Ring
13:2	237-42	1	O-Ring
14	32151-104	3	Ring-Retaining, External
15	84-5300	1	Nut-Jam
16	71-4740-03	1	RH Tie Rod End ASM
16:1		1	End-Rod, Tie (RH) ●
16:1:1	105-7941	1	Nut-Hex, Slotted
16:1:2	105-7835	1	Seal
16:1:3	302-5	1	Fitting-Grease
17	106-6774	3	Joint-Ball
18	32136-2	3	Nut-SHH
19	100-2508	2	Washer-Thrust
20	302-2	2	Fitting-Grease
21	100-4196	2	Ring-Retaining
22	115-0169	2	Washer-Thrust
23	100-3362	2	Cap-Spindle
24	3234-12	2	Screw-HHF
25	302-5	4	Fitting-Grease
26	117-2986	1	Centerlink
27	3218-5	2	Nut-Jam
28	3272-12	6	Pin-Cotter
29	120-0391	1	Front LH Arm ASM
29:2	94-8947	2	Bushing-Flange
30	325-6	2	Screw-HH
31	117-3167	2	Front Pin ASM
32	120-0390	1	Front RH Arm ASM
32:2	94-8947	2	Bushing-Flange
33	99-5105	2	Bolt-Shoulder
34	117-2983	2	Rod-Tie, Front
34:1	42-9650	1	Nut-Hex, Jam
34:2	117-3287	1	Dust Boot
34:5	302-5	1	Fitting-Grease
35	93-4628	1	Washer
36	105-4886	2	Nut-Tinnerman

● Not serviced separately

Rear Steering Assembly

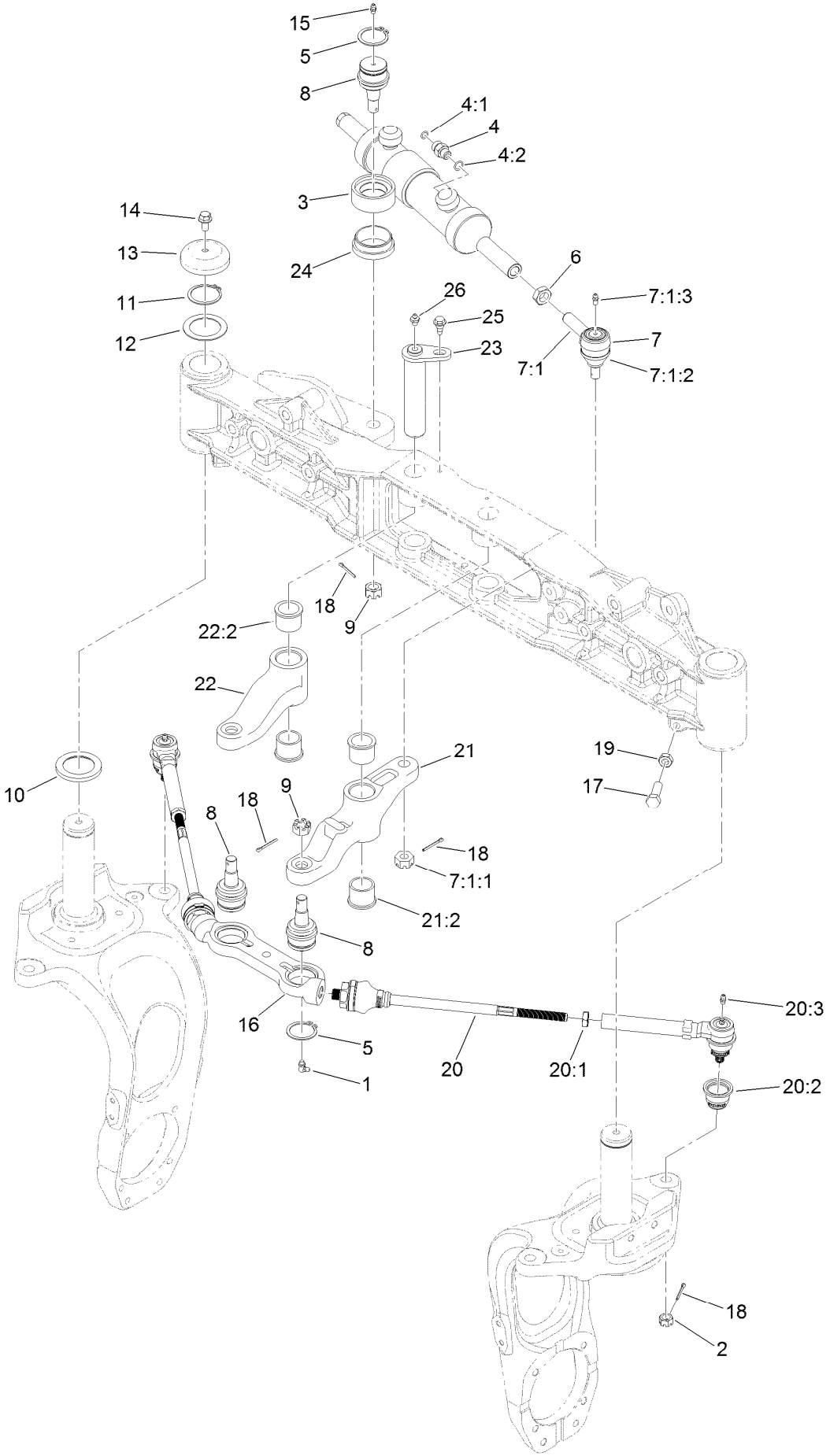

Rear Steering Assembly (continued)

Ref.	Part Number	Qty.	Description
1	302-60	2	Fitting-Grease
2	32136-3	2	Nut-SHH
3	125-2835	1	HYD Cylinder ASM
4	340-2	2	Fitting-HYD, Straight
4:1	237-22	1	O-Ring
4:2	237-42	1	O-Ring
5	32151-104	3	Ring-Retaining, External
6	84-5300	1	Nut-Jam
7	71-4740-03	1	RH Tie Rod End ASM
7:1		1	End-Rod, Tie (RH) ●
7:1:1	105-7941	1	Nut-Hex, Slotted
7:1:2	105-7835	1	Seal
7:1:3	302-5	1	Fitting-Grease
8	106-6774	3	Joint-Ball
9	32136-2	3	Nut-SHH
10	100-2508	2	Washer-Thrust
11	100-4196	2	Ring-Retaining
12	115-0169	2	Washer-Thrust
13	100-3362	2	Cap-Spindle
14	3234-12	2	Screw-HHF
15	302-5	1	Fitting-Grease
16	117-2986	1	Centerlink
17	325-6	2	Screw-HH
18	3272-12	6	Pin-Cotter
19	3218-5	2	Nut-Jam
20	117-2984	2	Rod-Tie, Rear
20:1	42-9650	1	Nut-Hex, Jam
20:2	117-3287	1	Dust Boot
20:3	302-5	1	Fitting-Grease
21	125-2832	1	Rear LH Arm ASM
21:2	94-8947	2	Bushing-Flange
22	120-0392	1	Rear RH Arm ASM
22:2	94-8947	2	Bushing-Flange
23	117-3137	2	Pin ASM
24	120-0238	1	Spacer-Cylinder
25	99-5105	2	Bolt-Shoulder
26	302-2	2	Fitting-Grease

● Not serviced separately

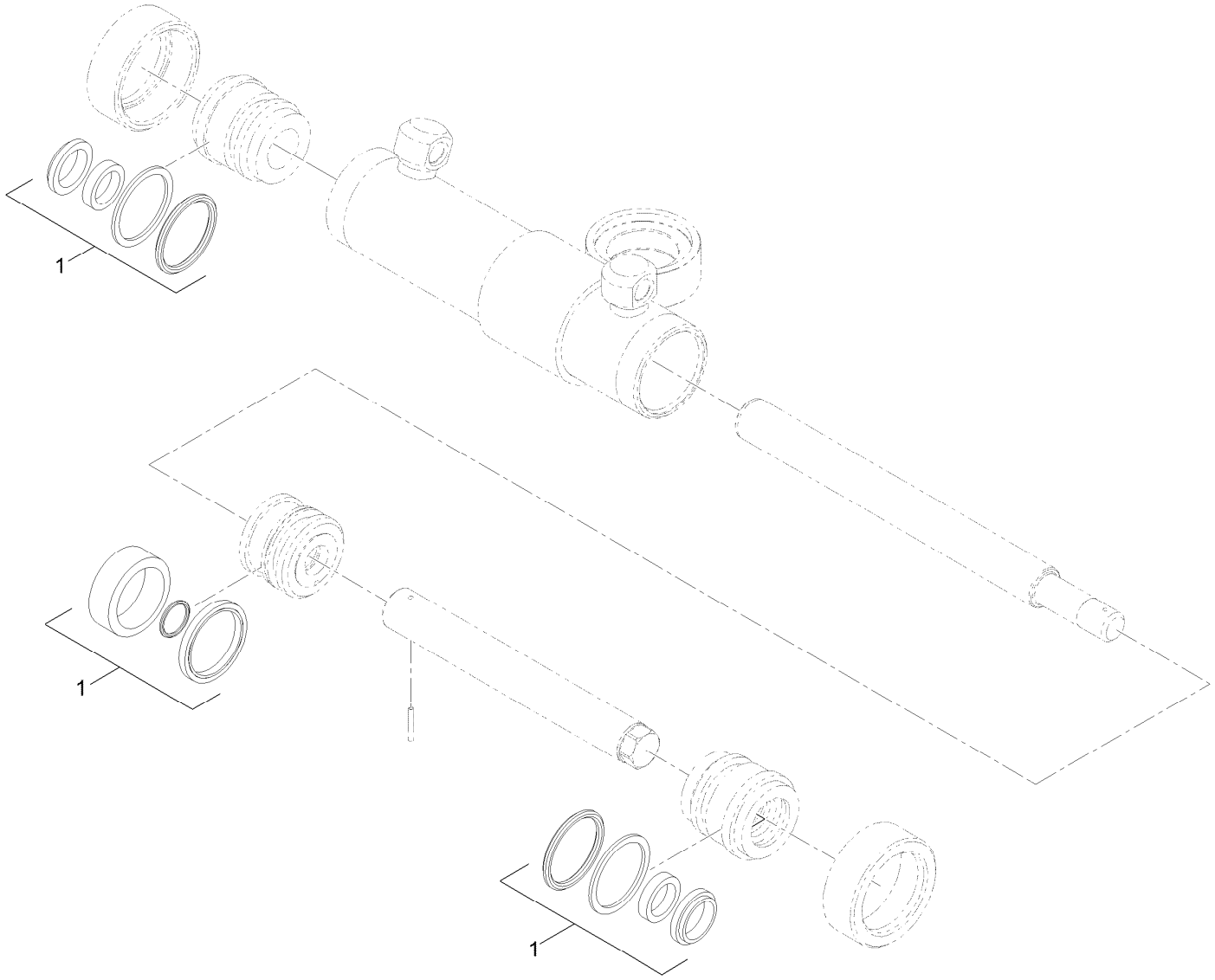

Hydraulic Cylinder Assembly No.125-2835

Ref.	*Part Number*	*Qty.*	*Description*
1	120-2557	1	Seal Kit

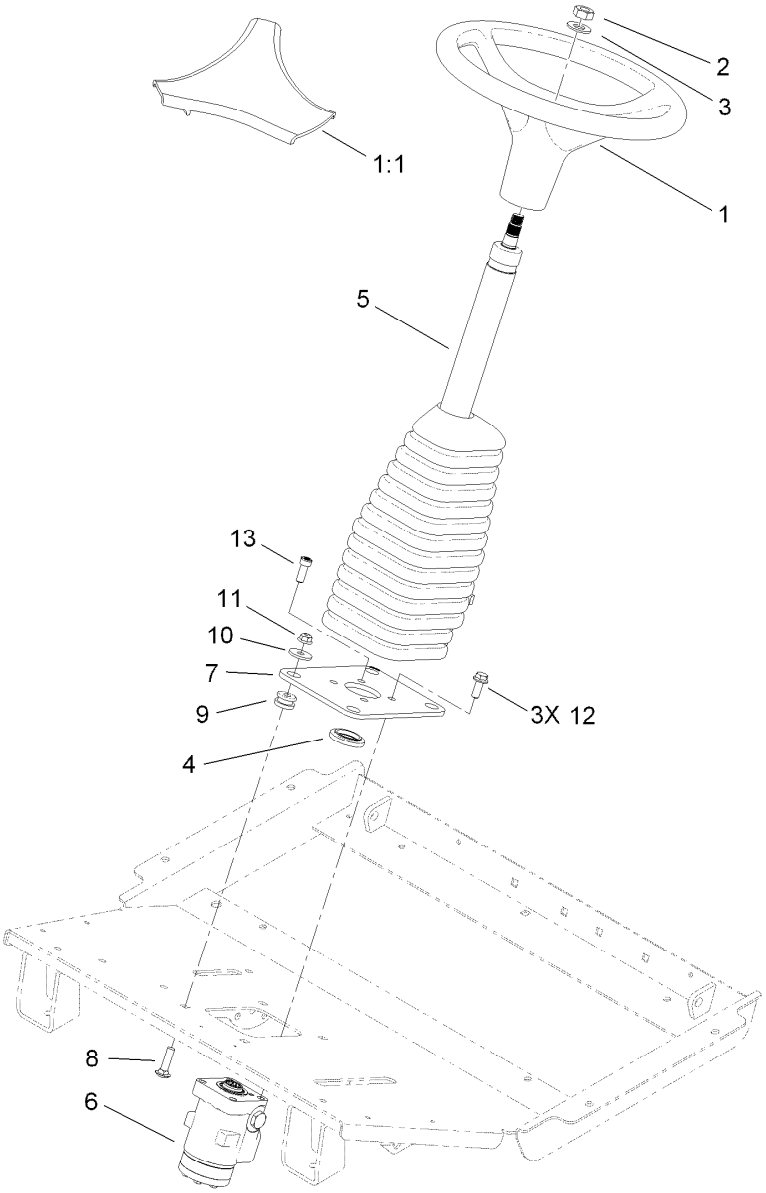

Steering Column Assembly

Ref.	Part Number	Qty.	Description
1	98-1471	1	Wheel-Steering
1:1	98-1468	1	Cover-Wheel, Steering
2	3296-33	1	Nut-Lock, NI
3	3256-27	1	Washer-Flat
4	117-3373	1	Bushing-Alignment
5	117-3371	1	Column-Steering
6	130-7948	1	Valve-Control, Steering
7	117-3234-03	1	Plate-Steering
8	3231-26	4	Screw-CARR
9	63-9750	4	Mount
10	63-8410	4	Washer
11	104-8301	4	Nut-Flange, NI
12	108-1531	3	Screw-HHF
13	3273-41	1	Screw-HSH

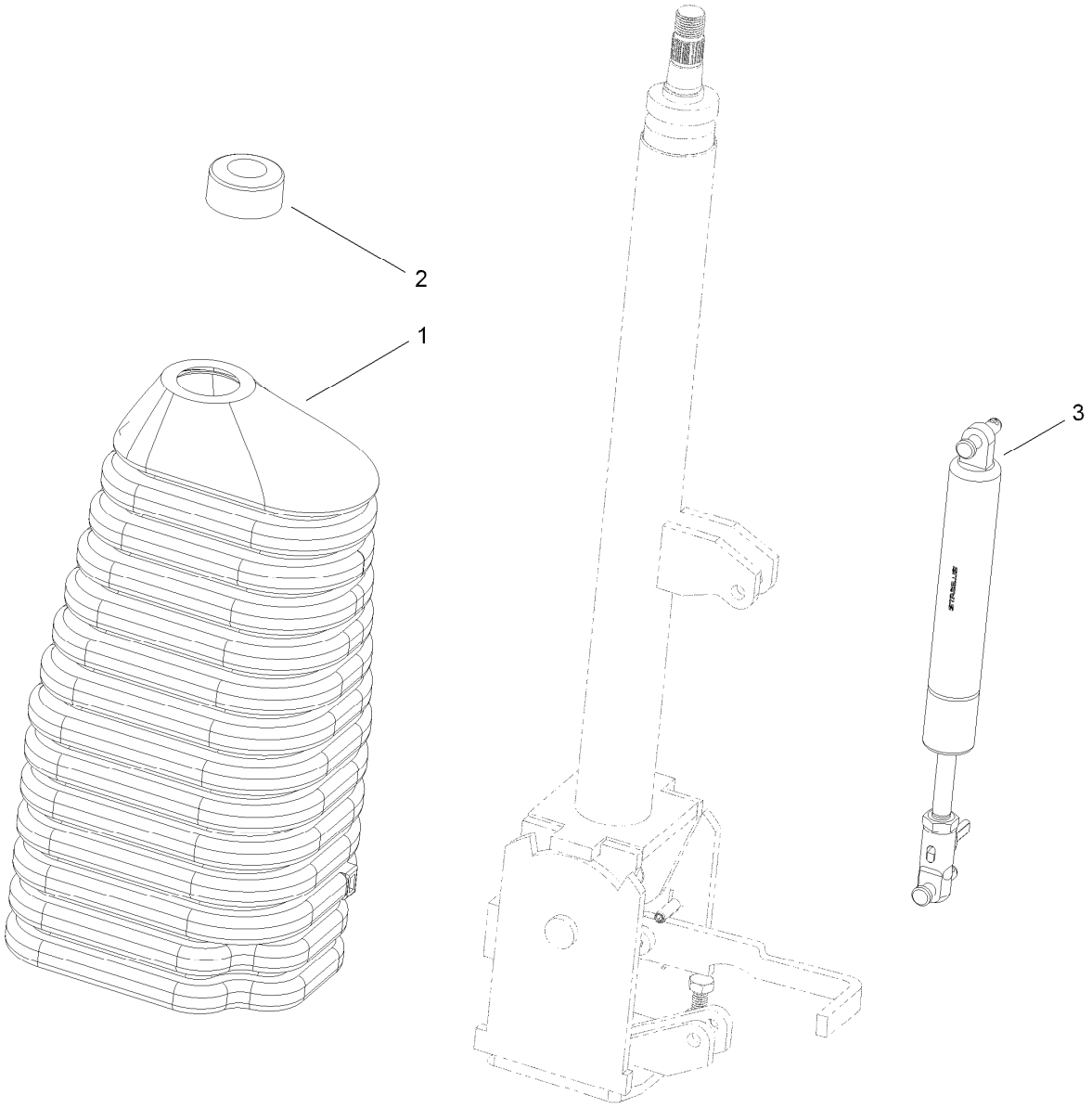

Steering Column Assembly No. 117-3371

Ref.	*Part Number*	*Qty.*	*Description*
1	120-2592	1	Boot-Rubber, Column
2	120-2593	1	Boot-Rubber, Bearing
3	120-2594	1	Gas Spring ASM

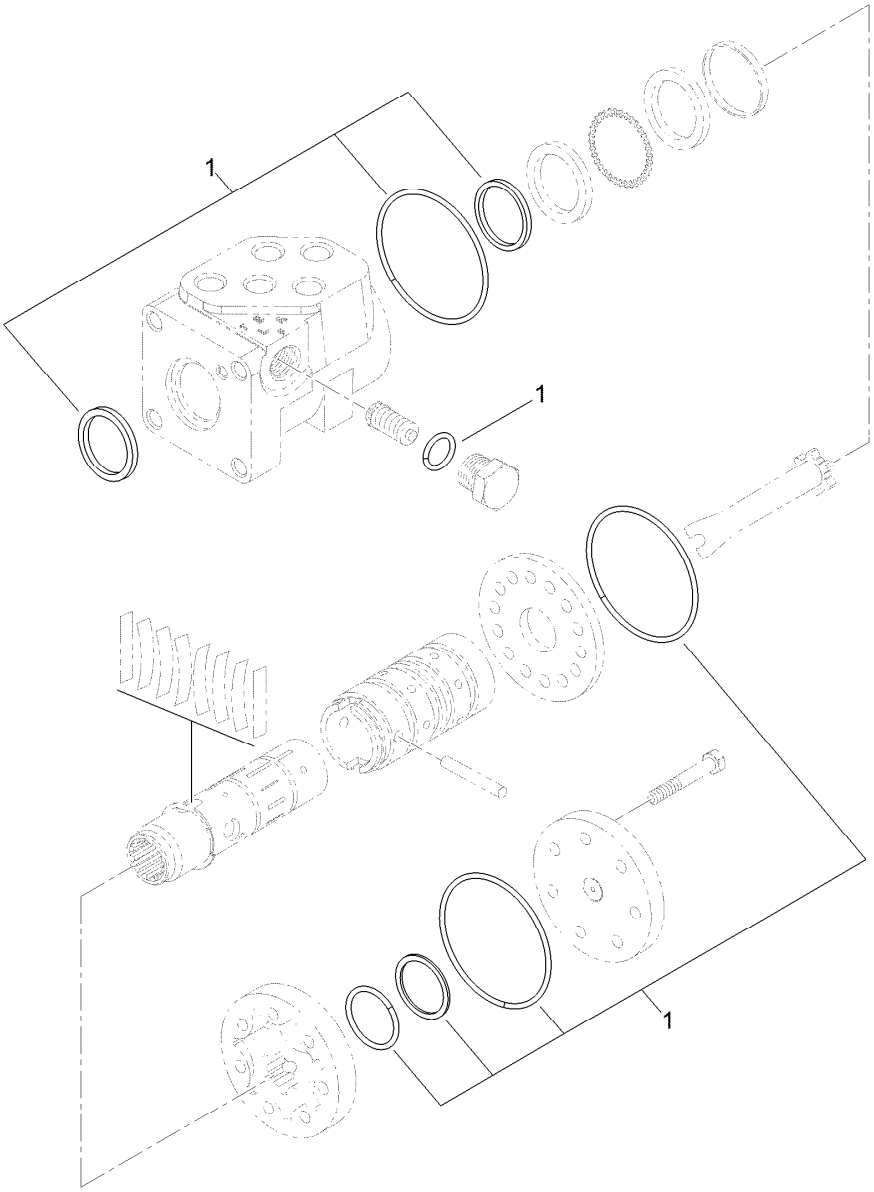

Steering Valve Assembly No. 130-7948

Ref.	*Part Number*	*Qty.*	*Description*
1	130-8357	1	Seal Kit

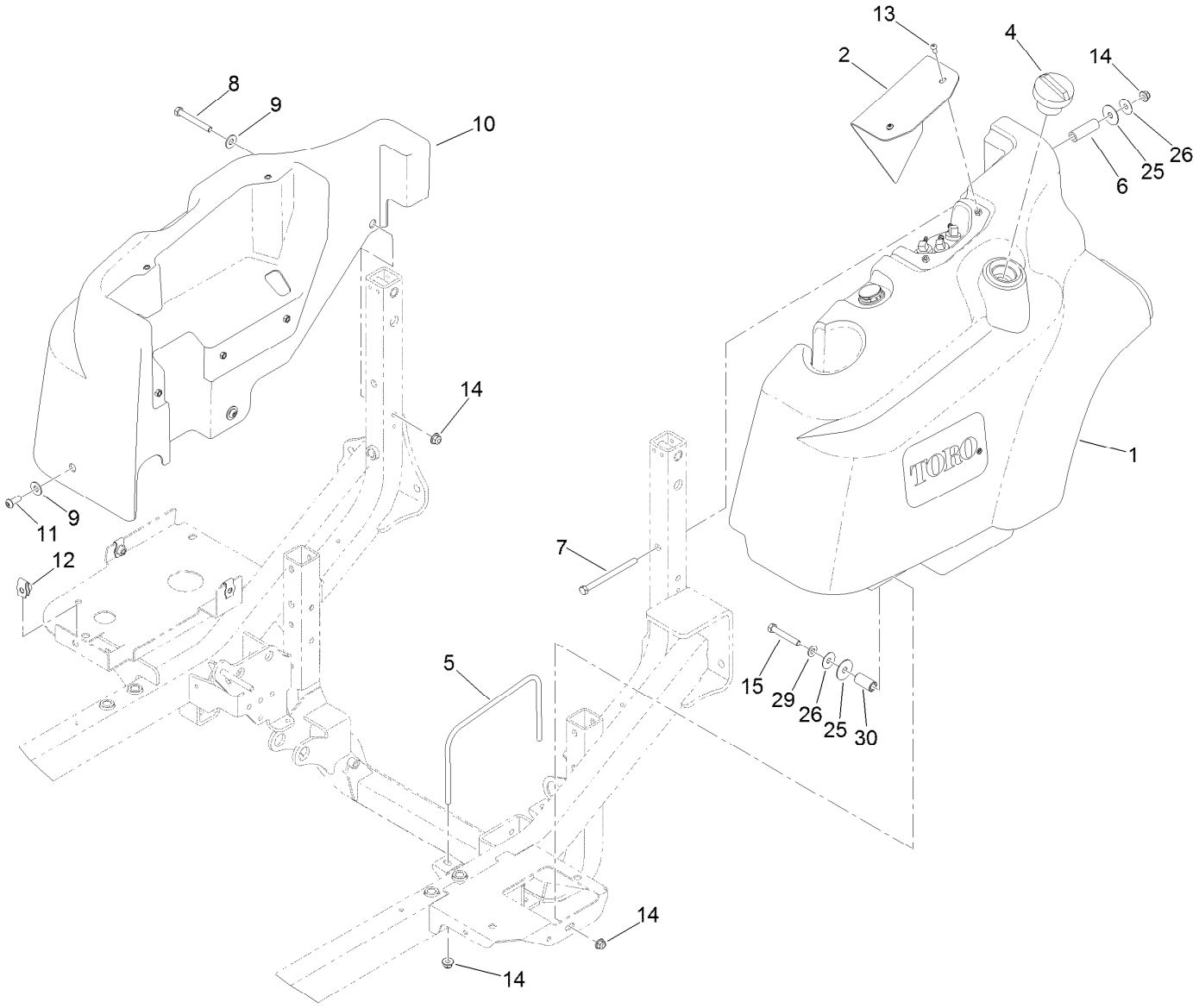

Fuel Tank and Control Panel Component Assembly

Ref.	Part Number	Qty.	Description
1	131-1920	1	Fuel Tank ASM
2	117-3359-03	1	Plate-Cover
4	125-9170	1	Cap-Fuel, Diesel (Ultra Low Sulfur)
5	117-3394	1	Bracket-Tank
6	117-3387	1	Tube-Spacer
7	323-39	1	Screw-HH
8	323-14	1	Screw-HH
9	100-7403	4	Washer-Flat
10	117-3353	1	Cover-Tank, HYD

Ref.	Part Number	Qty.	Description
11	3274-94	3	Screw-HSBH
12	105-4886	3	Nut-Tinnerman
13	3274-31	2	Screw-HSBH
14	104-8301	5	Nut-Flange, NI
15	323-12	1	Screw-HH
25	95-1905	2	Washer-Rubber
26	105-6814	2	Washer-Plain
29	3256-24	1	Washer-Flat
30	110-3726	1	Spacer

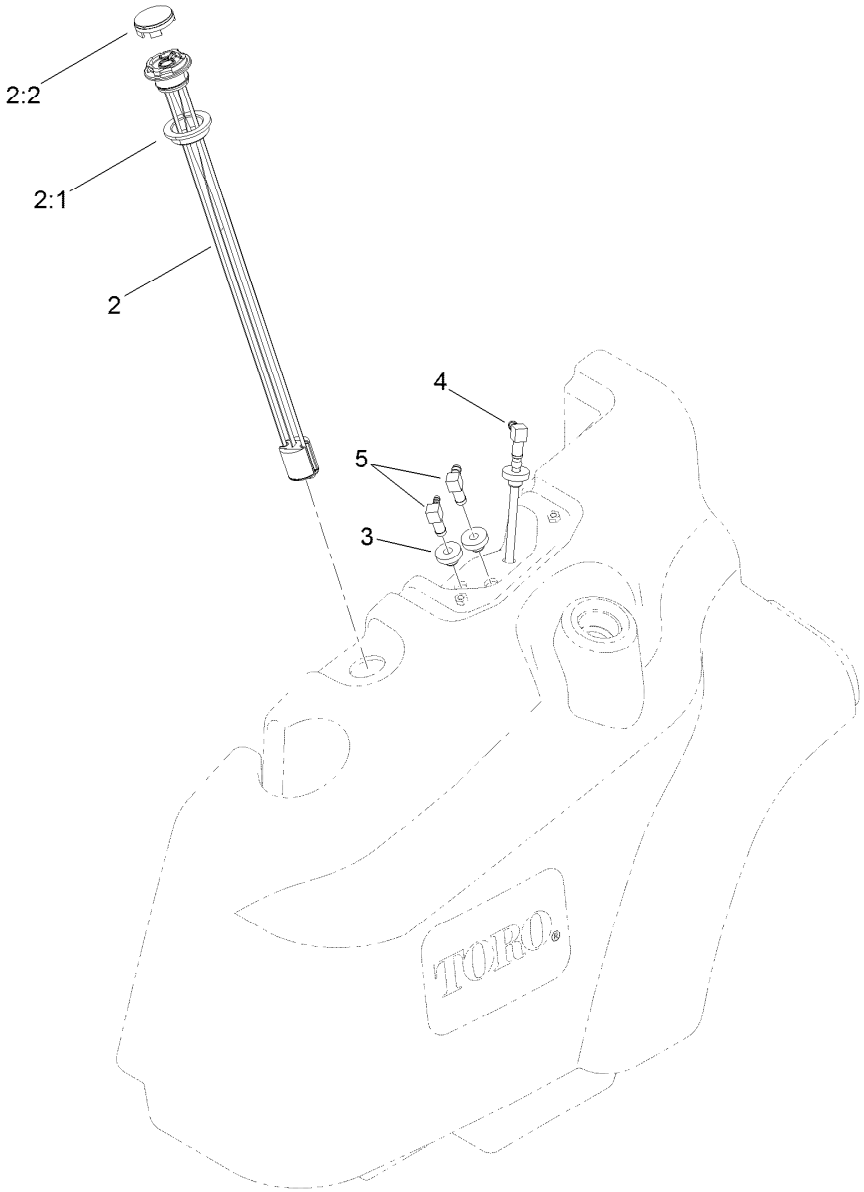

Fuel Tank Assembly No. 131-1920

Ref.	*Part Number*	*Qty.*	*Description*
2	117-3238	1	Gauge-Fuel
2:1	119-0508	1	Seal
2:2	117-8404	1	Dial-Gauge
3	46-6560	3	Bushing
4	117-3370	1	Pipe-Stand
5	46-6550	2	Fitting-Elbow, 90 DEG

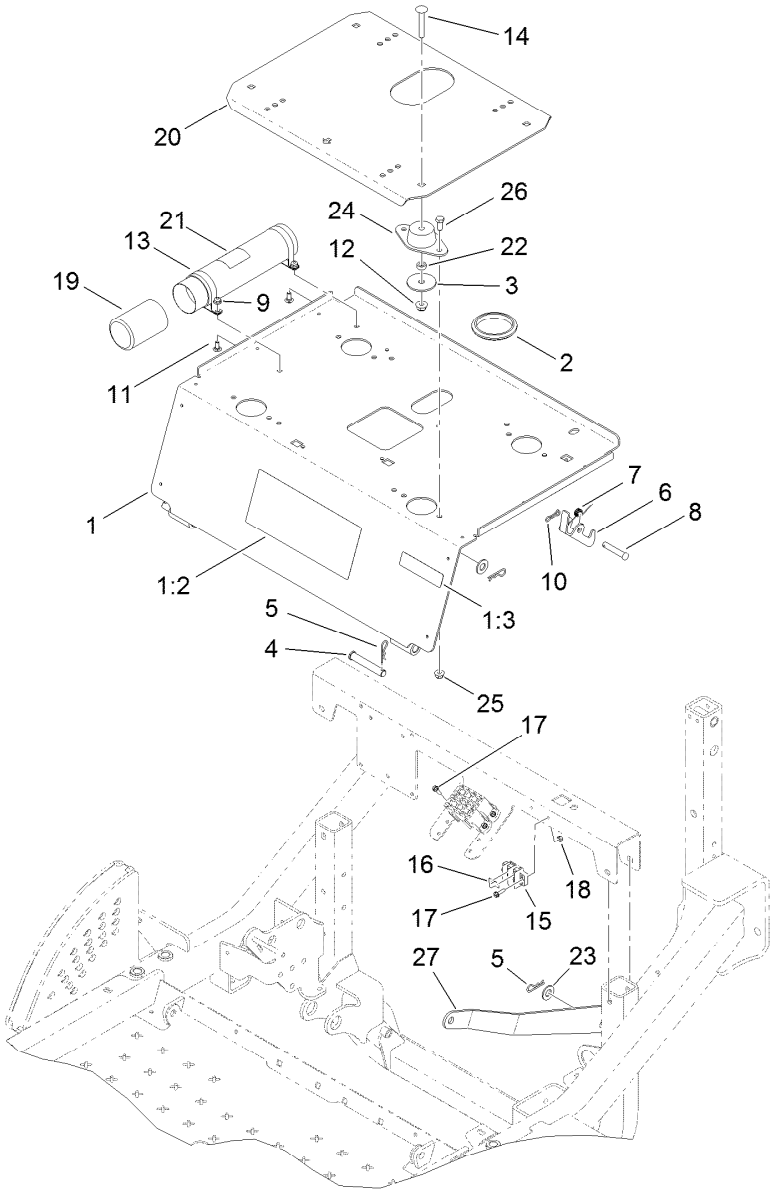

Seat Plate Assembly

Ref.	Part Number	Qty.	Description
1	120-0244	1	Seat Plate ASM
1:2	117-3273	1	Decal-Operation, Warning
1:3	117-2718	1	Decal-Arrester, Spark
2	237-164	1	Grommet
3	83-1040	4	Washer-Flat
4	283-55	2	Pin-Clevis
5	3290-467	4	Pin-Hair
6	117-3067	1	Latch-Seat
7	104-4821	1	Spring-Torsion
8	283-82	1	Pin-Clevis
9	104-7201	2	Nut-Flange, NI
10	119-1415	1	Pin-Cotter, Locking
11	3229-1	2	Bolt-CARR
12	104-8301	4	Nut-Flange, NI
13	107-1865	2	R-Clamp

Ref.	Part Number	Qty.	Description
14	3231-40	4	Bolt-CARR, Short Neck
15	42862	1	Block-Terminal, Ground
16	42863	1	Strip-Jumper
17	32105-13	2	Screw-HWH
18	3296-2	2	Nut-Lock, NI
19	104-7048	1	Cap-Housing
20	117-3065-03	1	Plate-Seat
21	104-7050	1	Tube-Manual
22	83-1050	4	Spacer
23	3256-26	2	Washer-Flat
24	83-1030	4	Mount-Engine
25	104-8300	8	Nut-Flange, NI
26	322-3	8	Screw-HH
27	120-0242-01	1	Strap-Prop

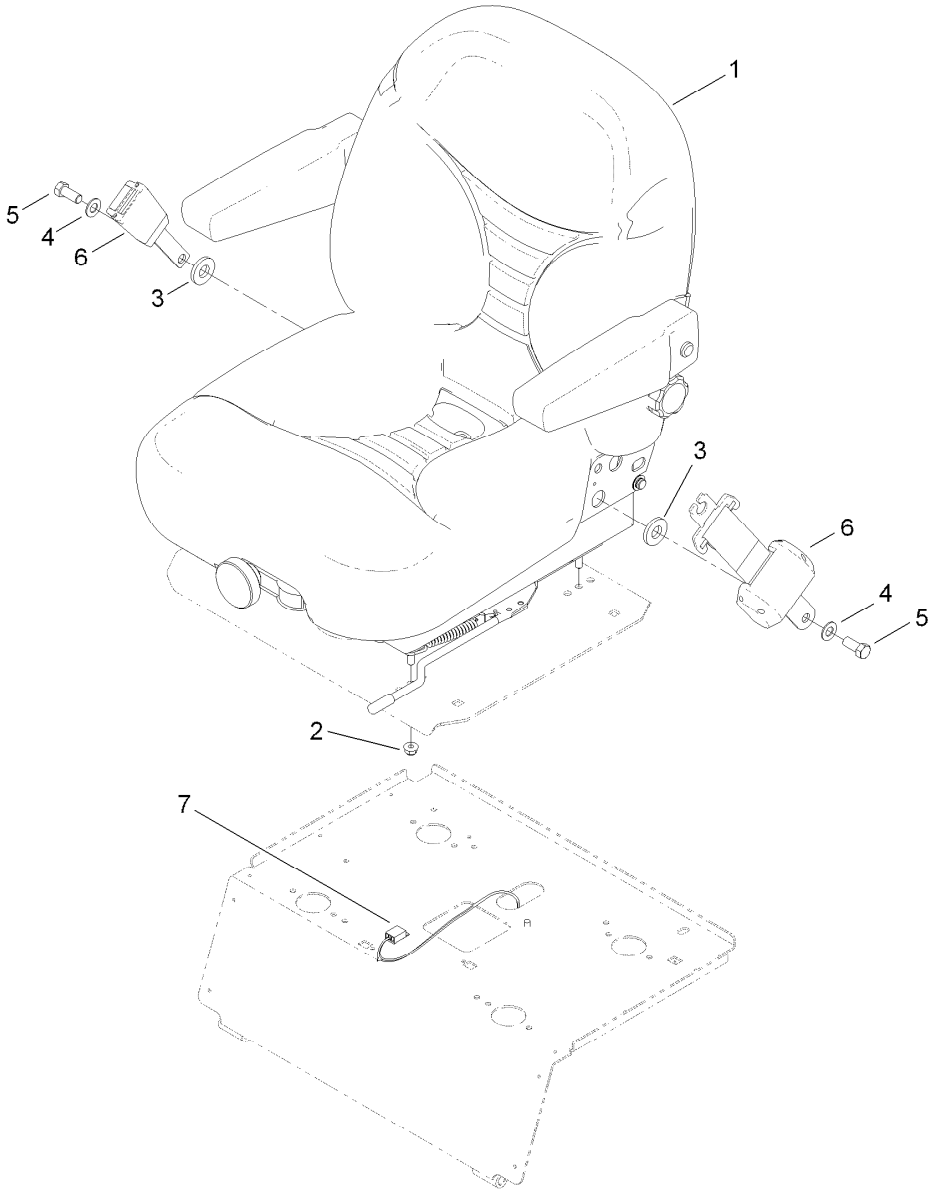

Seat Assembly

Ref.	Part Number	Qty.	Description
1	107-2286	1	Seat
2	104-8300	4	Nut-Flange, NI
3	99-7667	2	Washer-Flat
4	3256-25	2	Washer-Flat
5	3212-4	2	Screw-HH
6	110-0413	1	Seatbelt-Retractable
7	119-5786	1	Harness-Wire

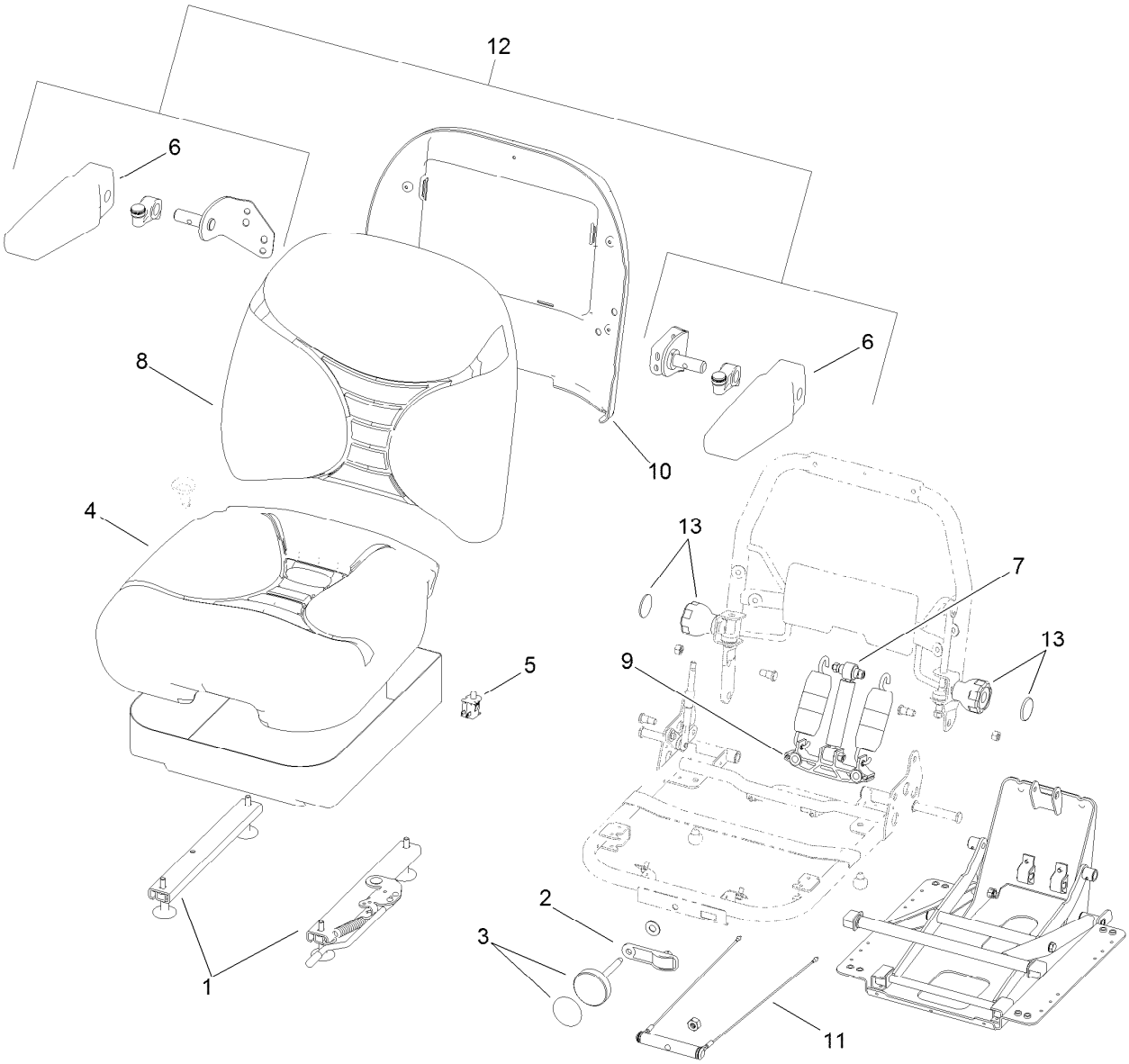

Seat Assembly No. 107-2286

Ref.	*Part Number*	*Qty.*	*Description*
1	107-1880	1	Seat Track Kit
2	107-1885	1	Weight Indicator Kit
3	121-9431	1	Knob Kit
4	107-1883	1	Bottom Cushion Kit
5	82-2190	1	Switch-Bail
6	107-1887	2	Pad-Armrest
7	107-1884	1	Shock Absorber Kit
8	107-1882	1	Back Cushion Kit
9	109-3343	1	Spring And Saddle Kit
10	109-3344	1	Back Panel Kit
11	109-3345	1	Weight Adjust Kit
12	121-9415	1	Armrest Kit
13	121-9432	2	Adjust Knob Kit

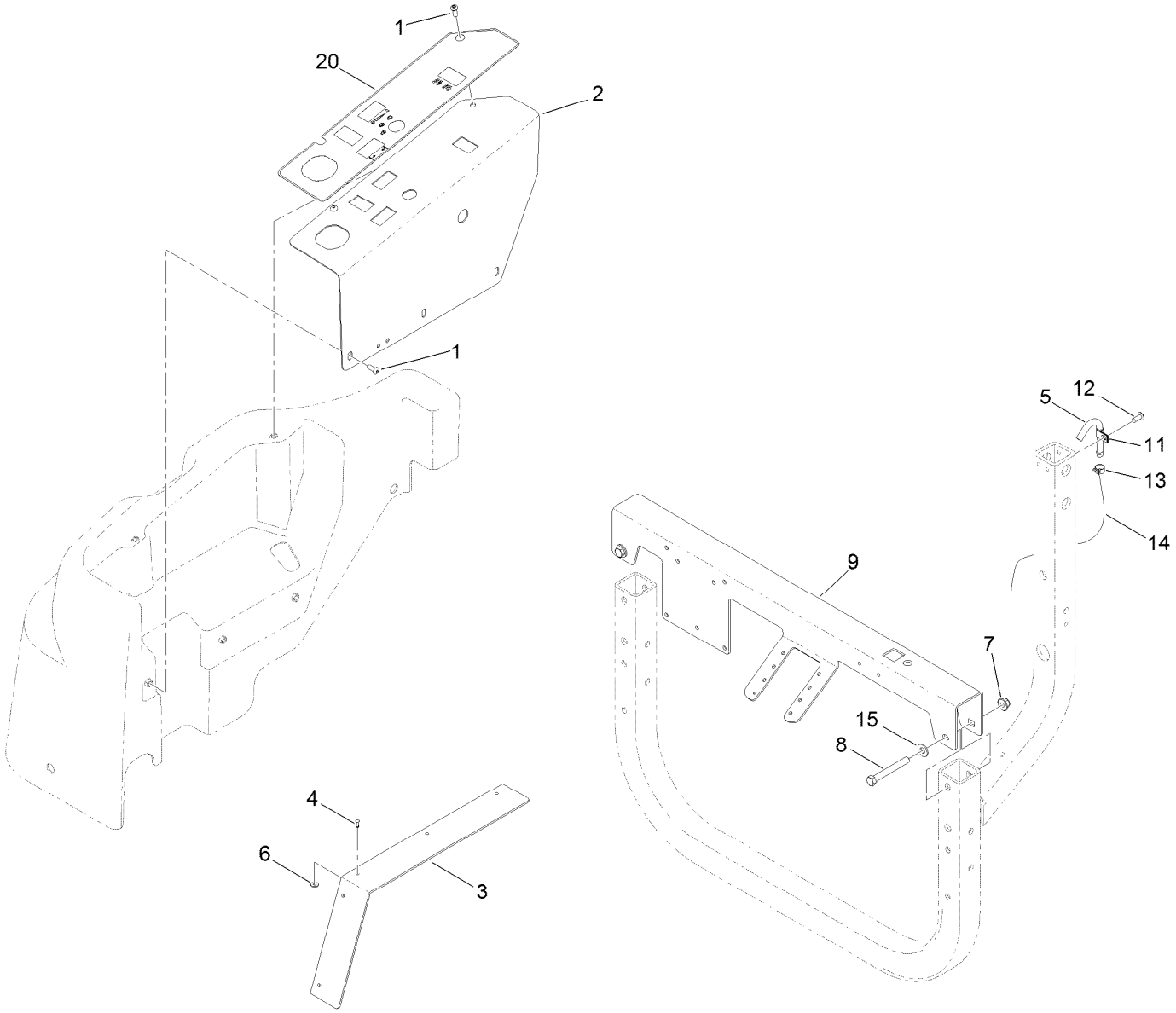

Seat Platform Assembly

Ref.	Part Number	Qty.	Description
1	3274-31	5	Screw-HSBH
2	125-2850-03	1	Panel-Control
3	117-3175	2	Strap-Filler
4	3290-282	10	Rivet-Blind
5	120-6820	1	Tube-Vent
6	3269-26	10	Washer-Plain
7	104-8301	2	Nut-Flange, NI
8	323-14	2	Screw-HH
9	125-4361-03	1	Channel-Seat
11	2412-89	1	Clamp-R
12	3290-412	1	Rivet
13	92-2379	2	Clamp-Hose
14	110-4101	1	Hose-Fuel
15	3256-24	2	Washer-Flat
20	125-4399	1	Decal-Control Panel, T4

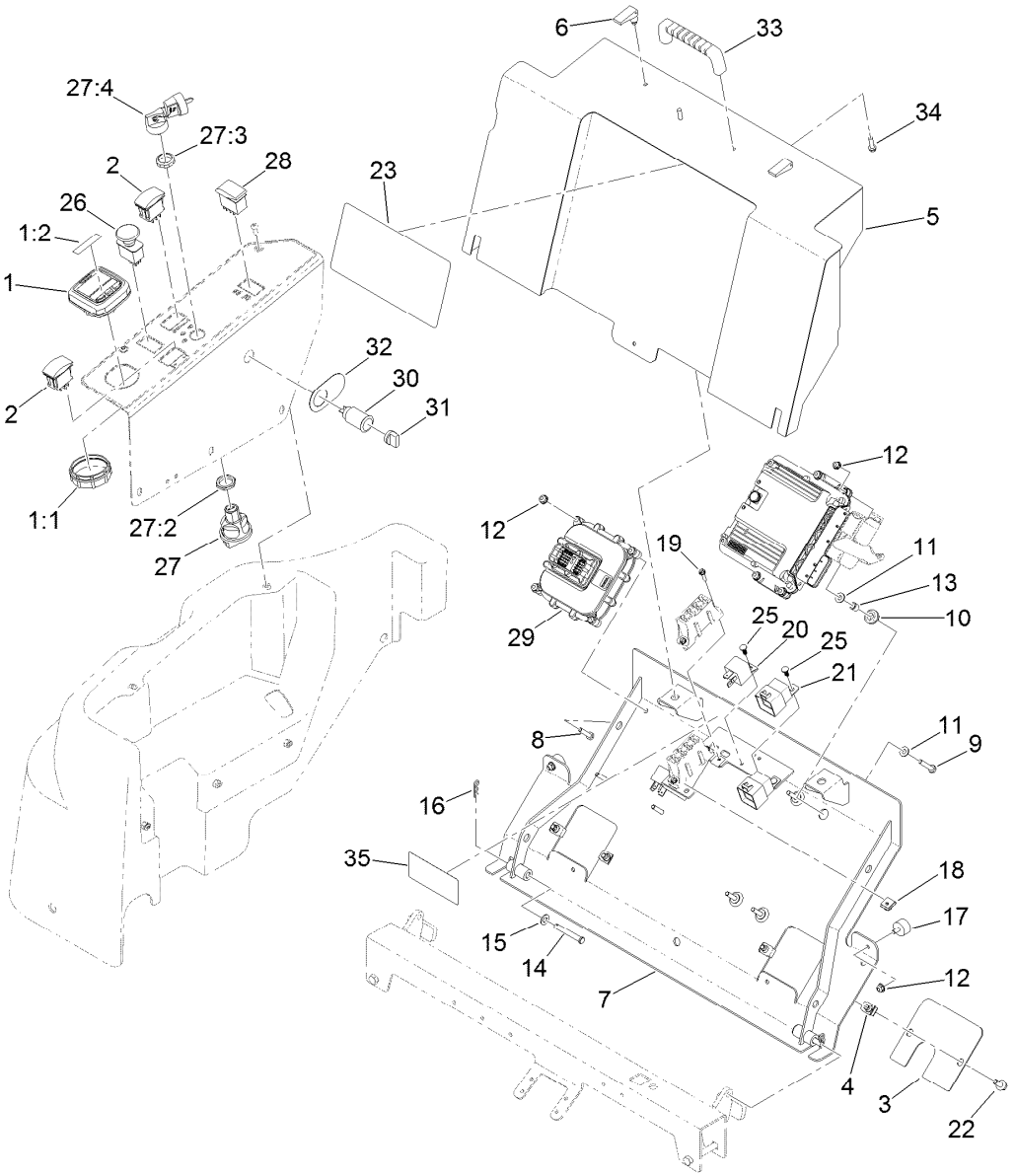

4 Wheel Drive Module Control and Relay Assembly

Ref.	Part Number	Qty.	Description
1	120-6310	1	Lcd Display ASM
1:1	120-4630	1	Nut-Display
1:2	120-6311	1	Decal-Display
2	100-1535	2	Switch
3	131-3365-03	2	Plate-Cover, Ec
4	94-2413	4	U-Nut
5	127-4867-03	1	Cover-Power Center
6	74-5950	2	Latch-Swell
7	125-4360-03	1	Power Center ASM
8	321-8	4	Screw-HH
9	321-9	4	Screw-HH
10	1-633630	4	Grommet
11	3256-22	8	Washer-Flat
12	104-7201	10	Nut-Flange, NI
13	1-633545	4	Spacer
14	110-0618	2	Pin-Clevis
15	3256-23	2	Washer-Flat
16	3290-307	2	Pin-Cotter
17	240-14	2	Bumper-Rubber
18	125-4384	4	Speed Nut, U-Type

Ref.	Part Number	Qty.	Description
19	32105-13	4	Screw-HWH
20	99-7435	2	Relay-Power
21	99-7430	2	Relay
22	3234-47	4	Screw-HHF
23	131-1946	1	Decal-Instructions, Service
25	120-6737	4	Plug-Plastic
26	95-4108	1	Switch-PTO
27	121-5159	1	Ignition Switch ASM
27:2	121-5160	1	Nut-Hex
27:3	121-5161	1	Nut-Face
27:4	121-5162	1	Key Set-Ignition
28	100-8490	1	Switch-Rocker
29	115-1900	1	Controller
30	99-7411	1	Point-Power
31	99-7416	1	Cap
32	106-2353	1	Decal-Powerpoint
33	65-5100	1	Handle-Door
34	46-8091	2	Screw-HWH
35	117-3233	1	Decal-Fuseblock

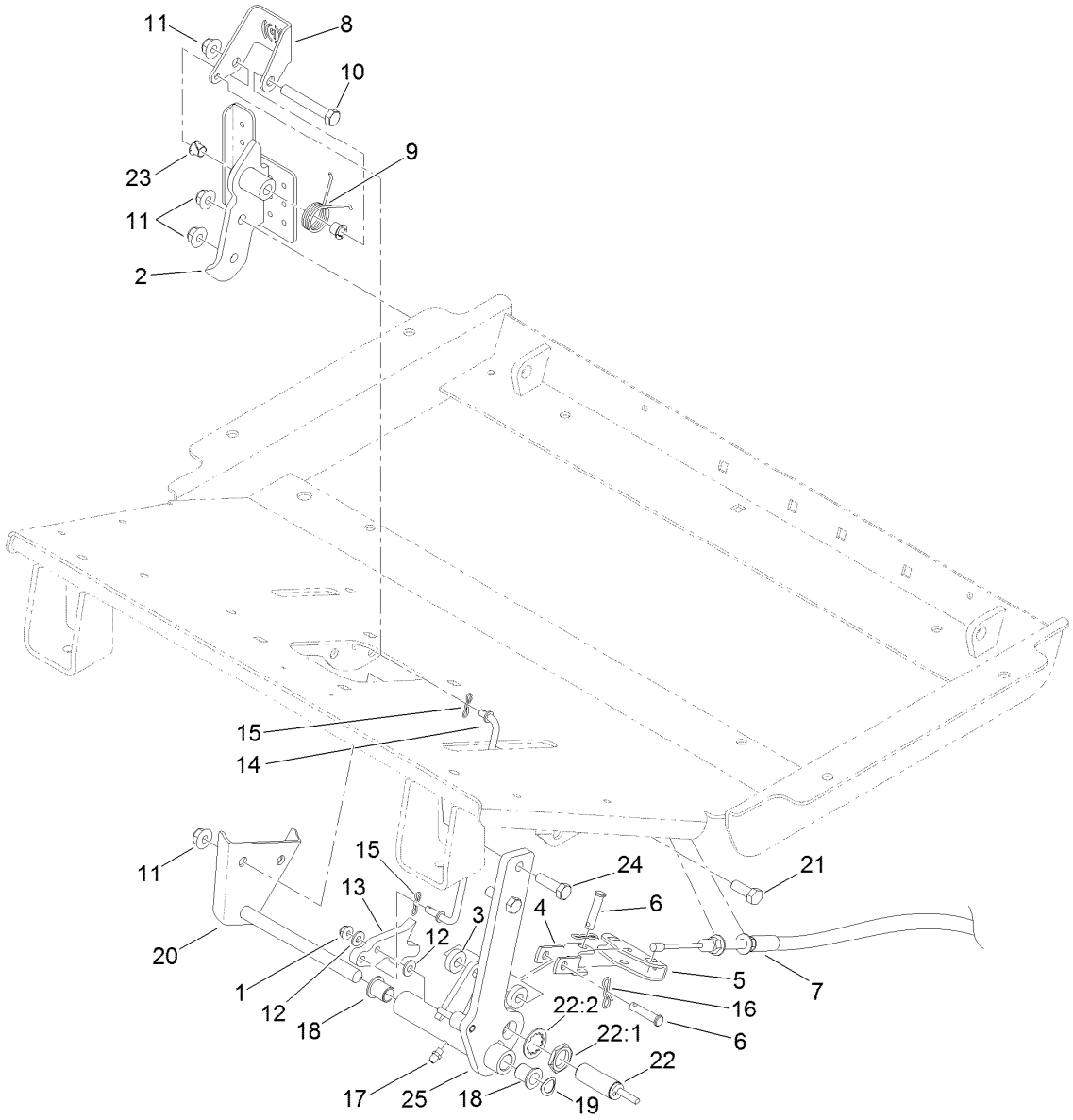

Brake Pedal Assembly

Ref.	Part Number	Qty.	Description
1	104-7201	1	Nut-Flange, NI
2	119-1403-03	1	Pedal-Brake
3	5-0652	2	Spacer
4	115-8060	1	Clevis-Double
5	115-8059	1	Yoke-Cable
6	283-14	2	Pin-Clevis
7	117-3214	2	Cable-Brake
8	119-1407	1	Pedal-Park
9	99-7140	1	Spring-Torsion
10	323-12	1	Screw-HH
11	104-8301	5	Nut-Flange, NI
12	3256-22	2	Washer-Flat
13	119-1406	1	Detent-Brake
14	119-1405	1	Rod-Brake Pawl

Ref.	Part Number	Qty.	Description
15	119-1414	2	Pin-Cotter, Locking
16	119-1415	2	Pin-Cotter, Locking
17	302-5	1	Fitting-Grease
18	125-8775	2	Bushing-Flange
19	3290-221	1	Washer-Spring
20	119-1388	1	Brake Pin ASM
21	323-6	2	Screw-HH
22	115-5300	1	Proximity Switch ASM
22:1	117-3207	2	Nut-Hex
22:2	117-3208	2	Washer-Lock, Internal Tooth
23	52-2891	2	Bushing-Flanged, Nylon
24	323-7	2	Screw-HH
25	119-1400-03	1	Lever-Brake

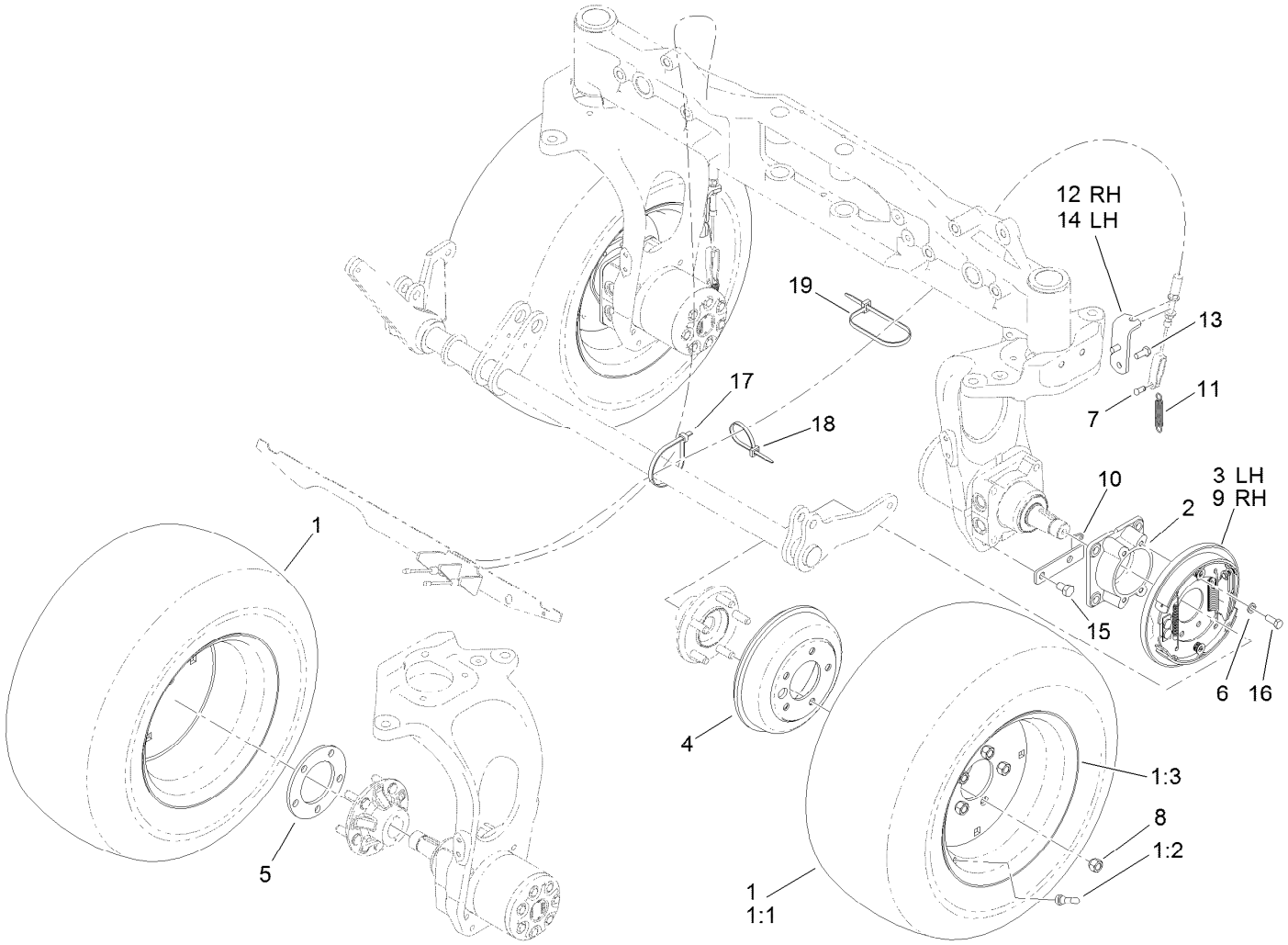

Wheel and Brake Assembly

Ref.	Part Number	Qty.	Description
1	117-2900	4	Tire And Wheel ASM
1:1	117-2901	1	Tire
1:2	232-27	1	Stem-Valve
1:3	117-2902	1	Rim
2	120-0248-03	2	Adapter-Brake
3	120-0235	1	LH Brake ASM
4	114-8864	2	Drum-Brake
5	115-0199-03	2	Spacer-Wheel
6	3253-21	8	Washer-Lock
7	283-62	2	Pin-Clevis
8	242-50	10	Nut-Lug

Ref.	Part Number	Qty.	Description
9	120-0233	1	RH Brake ASM
10	115-0132	2	Bracket-Spring, Return
11	87-4020	2	Spring-Extension
12	119-1352-03	1	Bracket-Brake Cable, RH
13	325-2	4	Screw-HH
14	119-1449-03	1	Bracket-Brake Cable, LH
15	323-5	4	Screw-HH
16	323-6	8	Screw-HH
17	3334-945	1	Tie-Cable
18	3290-378	1	Tie-Cable
19	250-5	1	Tie-Cable

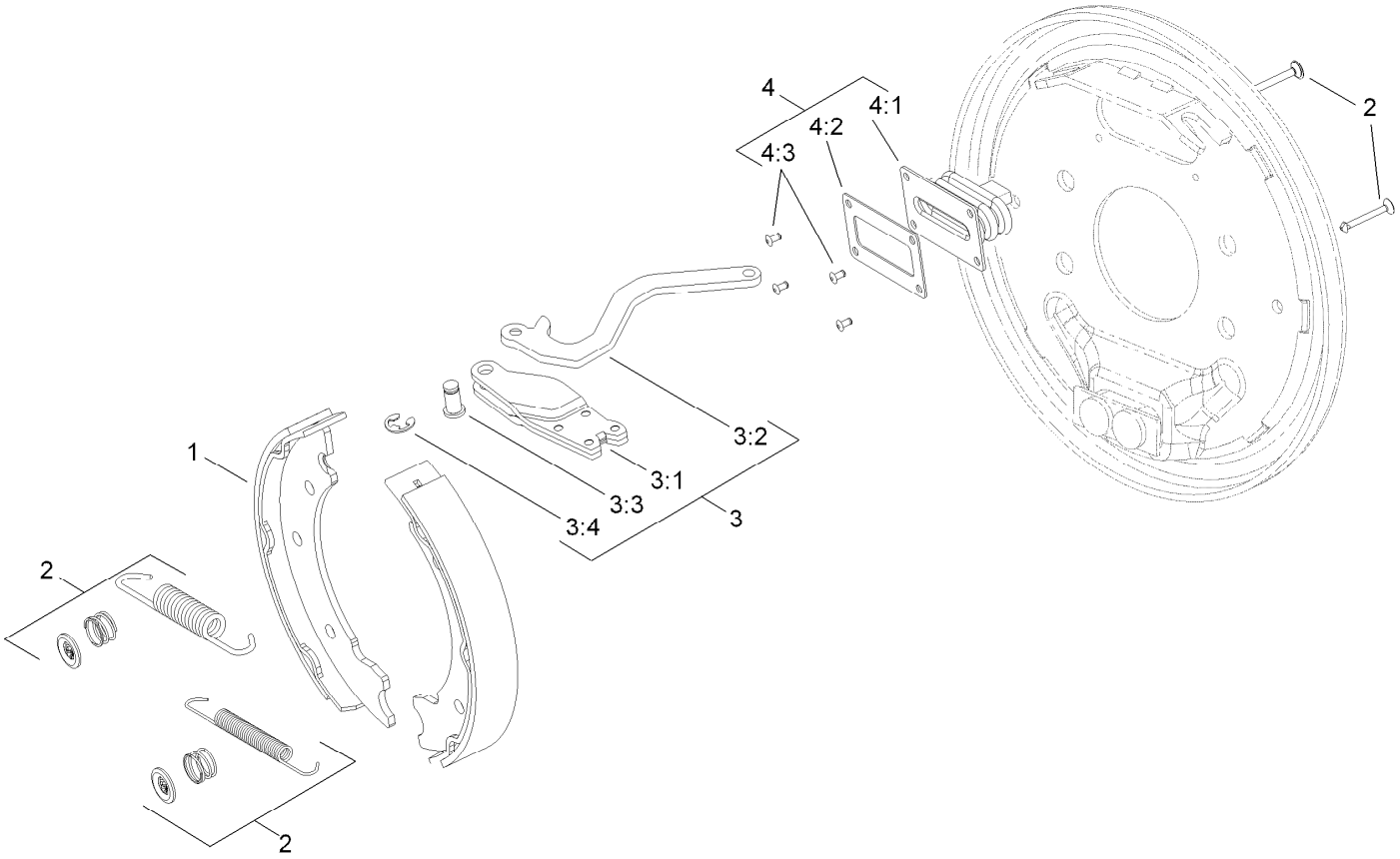

Left Hand Brake Assembly No. 120-0235

Ref.	*Part Number*	*Qty.*	*Description*
1	108-6981	1	Brake Shoe Kit
2	108-6983	1	Brake Hardware Kit
3	120-0236	1	LH Actuator Kit
3:1		1	Housing ●
3:2		1	Lever-LH ●
3:3		1	Pin-Pivot ●
3:4		1	E-Ring ●
4	110-8885	1	Dust Boot Kit
4:1		1	Boot ●
4:2		1	Plate-Back Up ●
4:3		2	Rivet ●

● Not serviced separately

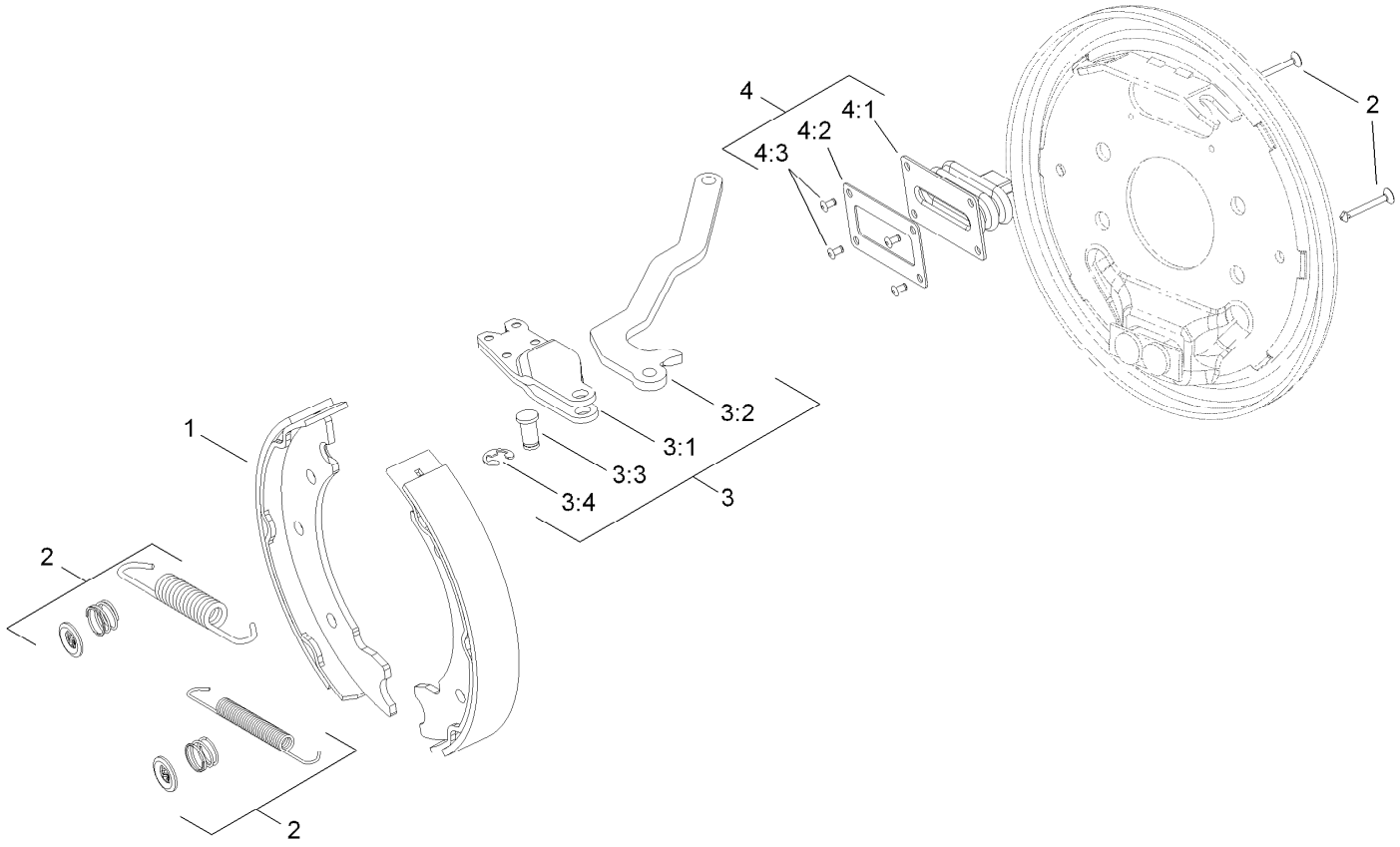

Right Hand Brake Assembly No. 120-0233

Ref.	*Part Number*	*Qty.*	*Description*
1	108-6981	1	Brake Shoe Kit
2	108-6983	1	Brake Hardware Kit
3	120-0234	1	RH Actuator Kit
3:1		1	Housing ●
3:2		1	Lever-RH ●
3:3		1	Pin-Pivot ●
3:4		1	E-Ring ●
4	110-8885	1	Dust Boot Kit
4:1		1	Boot ●
4:2		1	Plate-Back Up ●
4:3		2	Rivet ●

● Not serviced separately

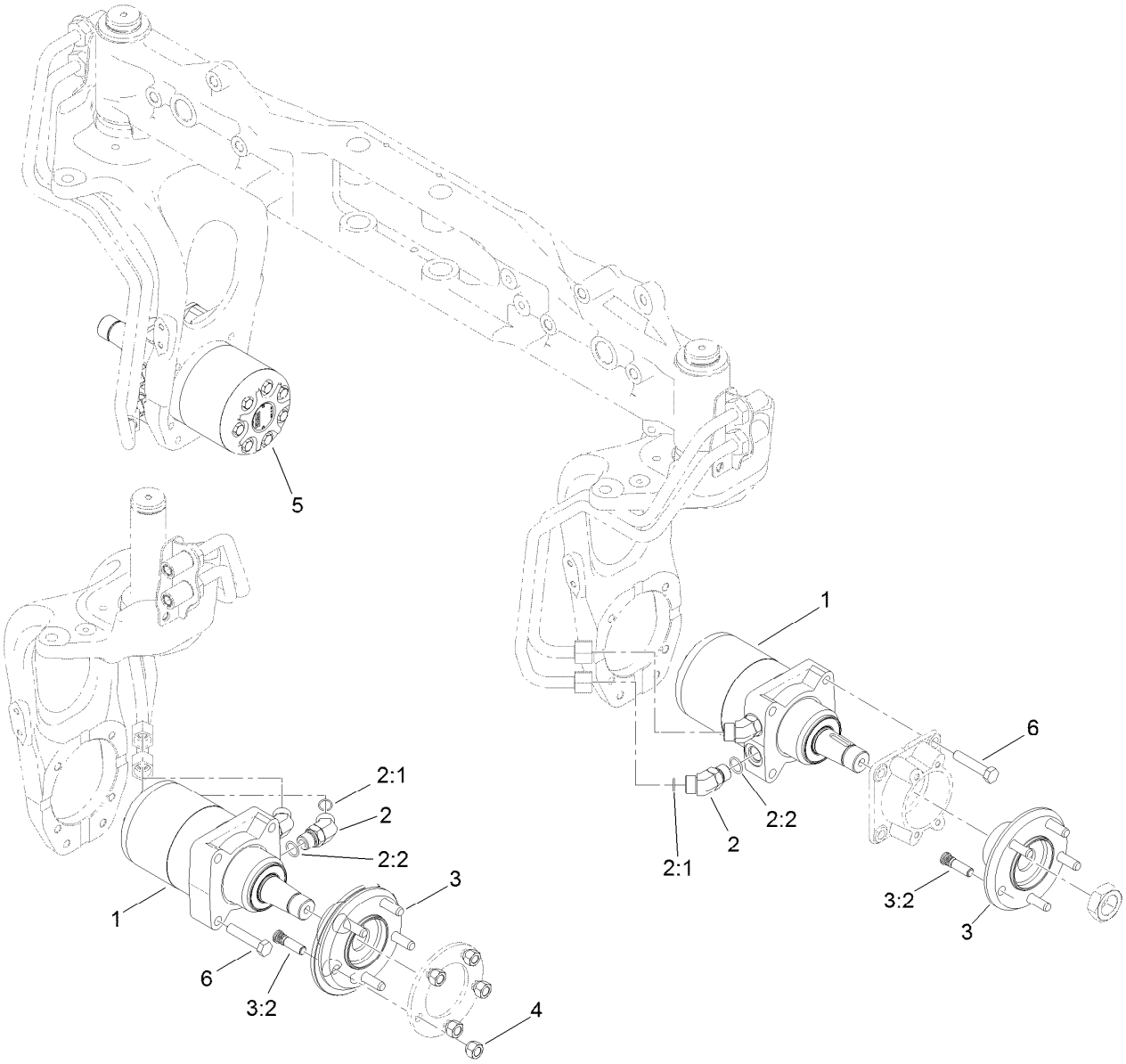

4 Wheel Drive Hydraulic Motor and Fitting Assembly

Ref.	*Part Number*	*Qty.*	*Description*
1	117-3284	2	HYD Motor ASM (280 CCW)
2	340-14	8	Fitting-HYD, 45 DEG
2:1	237-65	1	O-Ring
2:2	237-80	1	O-Ring
3	121-5492	4	Wheel Hub ASM
3:2	114-3918	5	Stud-Wheel
4	242-50	10	Nut-Lug
5	117-3285	2	HYD Motor ASM (280 CW)
6	325-34	16	Screw-HH

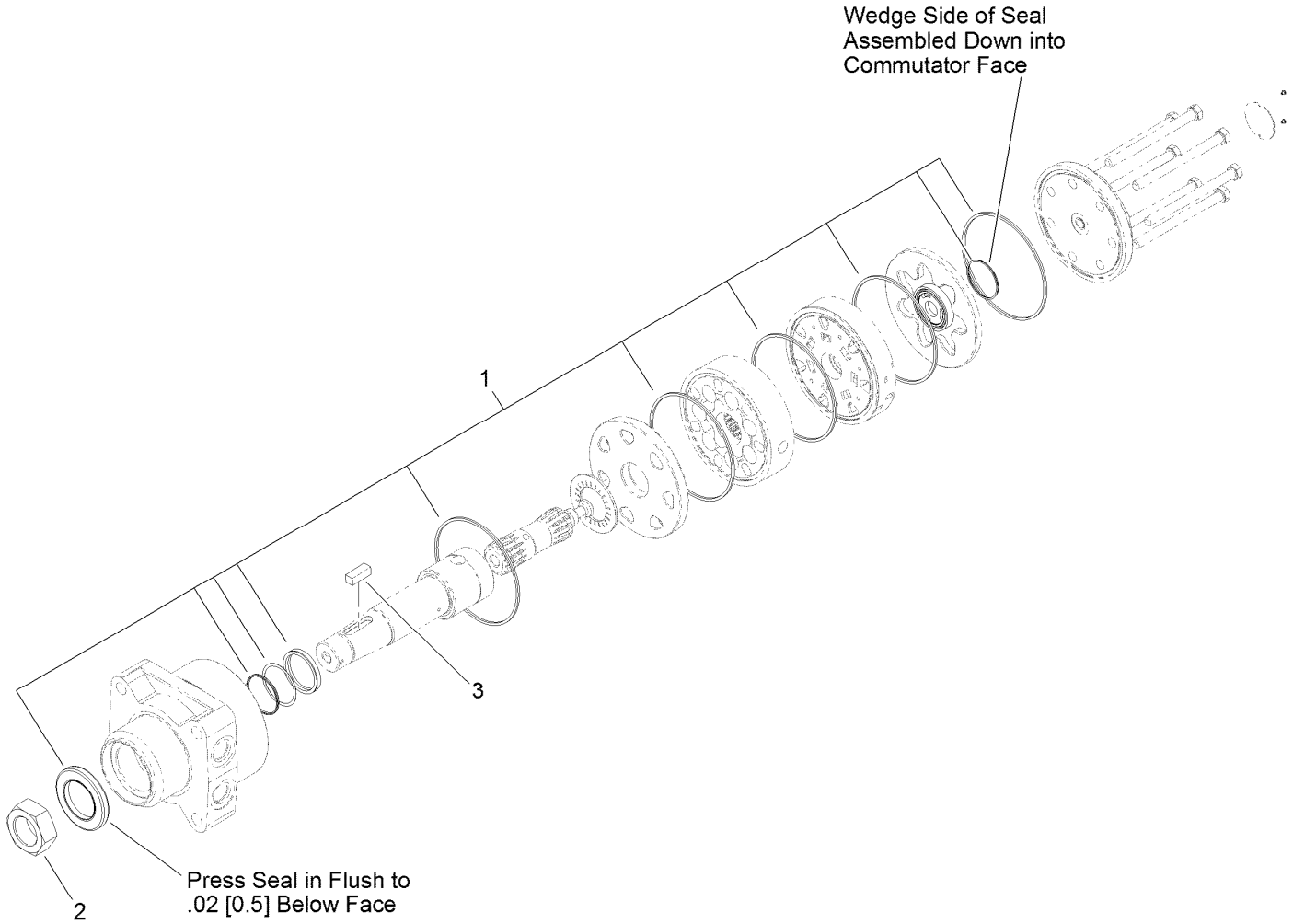

Hydraulic Motor Assembly No. 117-3284 (CCW)

Ref.	*Part Number*	*Qty.*	*Description*
1	107-9368	1	Seal Kit
2	117-3290	1	Nut-Hex
3	117-5198	1	Key-Square

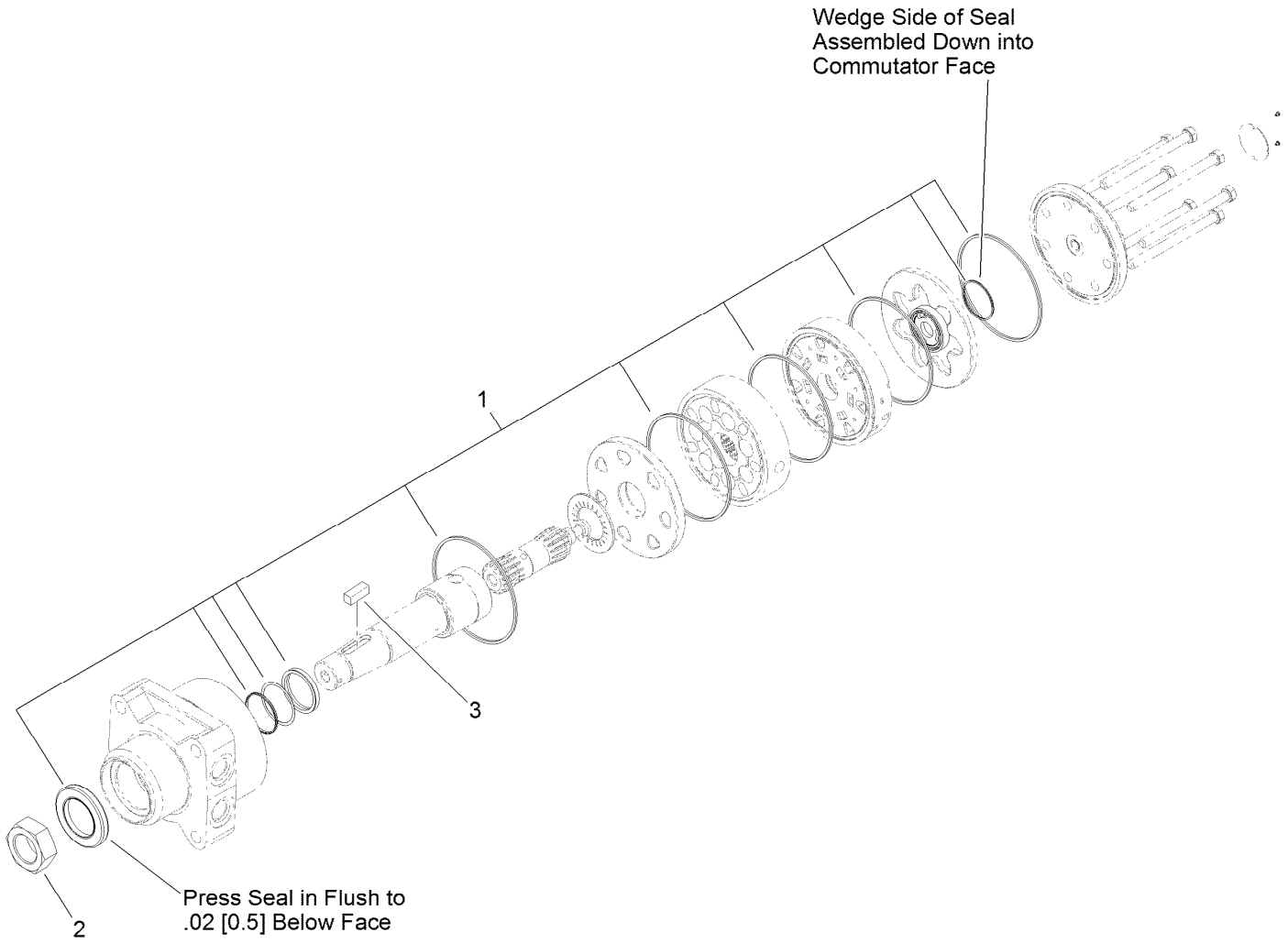

Hydraulic Motor Assembly No. 117-3285 (CW)

Ref.	*Part Number*	*Qty.*	*Description*
1	107-9368	1	Seal Kit
2	117-3290	1	Nut-Hex
3	117-5198	1	Key-Square

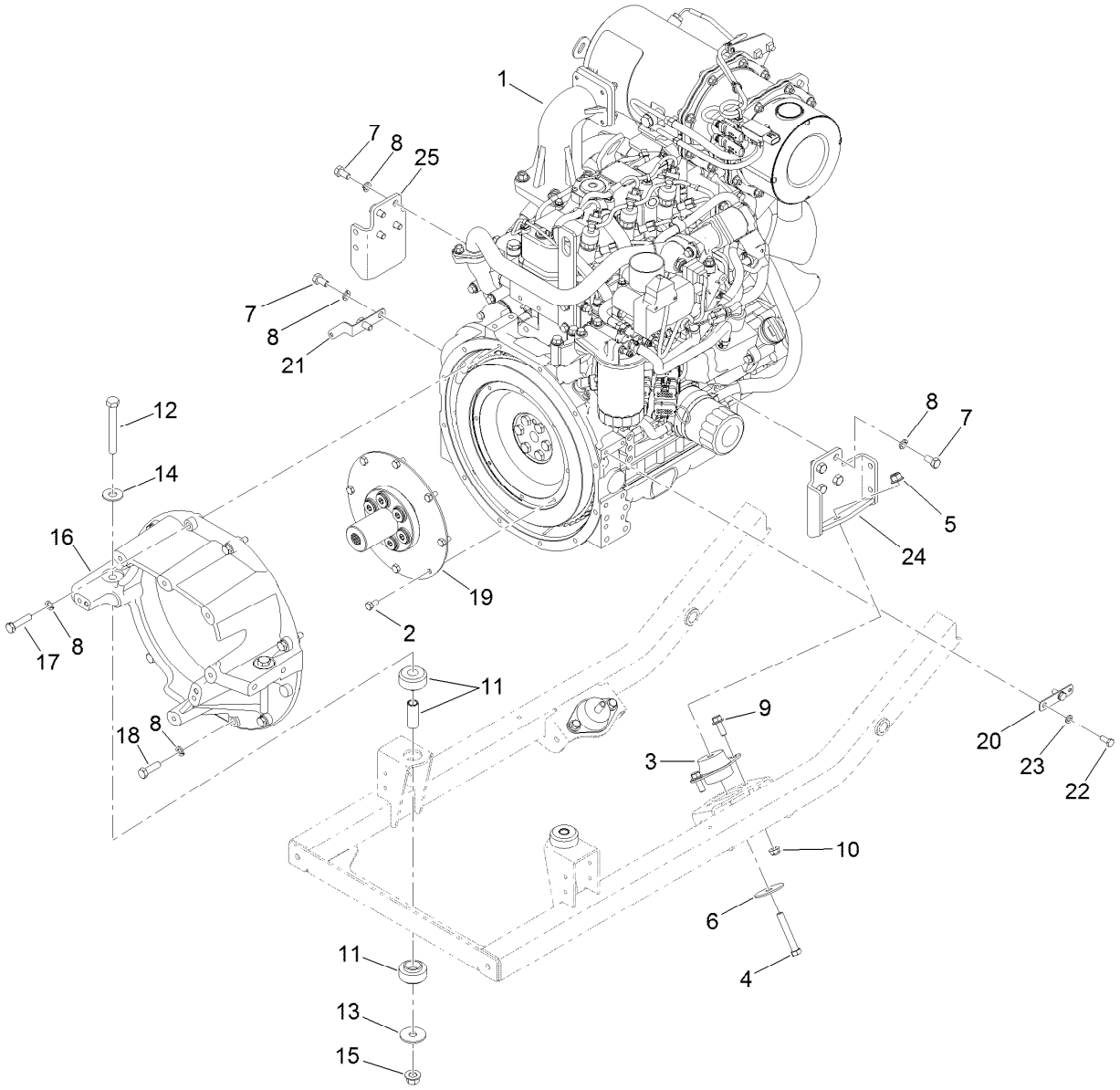

Engine Assembly

Ref.	Part Number	Qty.	Description
1	121-5399	1	Engine-Yanmar
2	99-5132	8	Bolt
3	53-9681	2	Mount-Engine
4	324-11	2	Screw-HH
5	114-8417	2	Nut-HF, NI
6	87-5100	2	Washer-Snubbing
7	33115-020	10	Screw-HH
8	48-9590	19	Washer-Lock
9	3234-42	4	Screw-HHF
10	104-8301	4	Nut-Flange, NI
11	120-9168	2	Mount-Rubber
12	325-17	2	Screw-HH
13	86-1990	2	Washer-Thrust

Ref.	Part Number	Qty.	Description
14	3256-6	2	Washer-Flat
15	99-5107	2	Nut-Lock
16	125-2836	1	Housing-Flywheel
17	33115-045	7	Screw-HH
18	33115-035	2	Screw-HH
19	120-9131	1	Coupling-Flywheel
20	121-5636	1	Tab-Harness
21	121-6580	1	Bracket-Harness
22	33114-020	2	Screw-HH
23	3253-4	2	Washer-Lock
24	125-2841-03	1	Mount-LH
25	125-4363-03	1	Mount

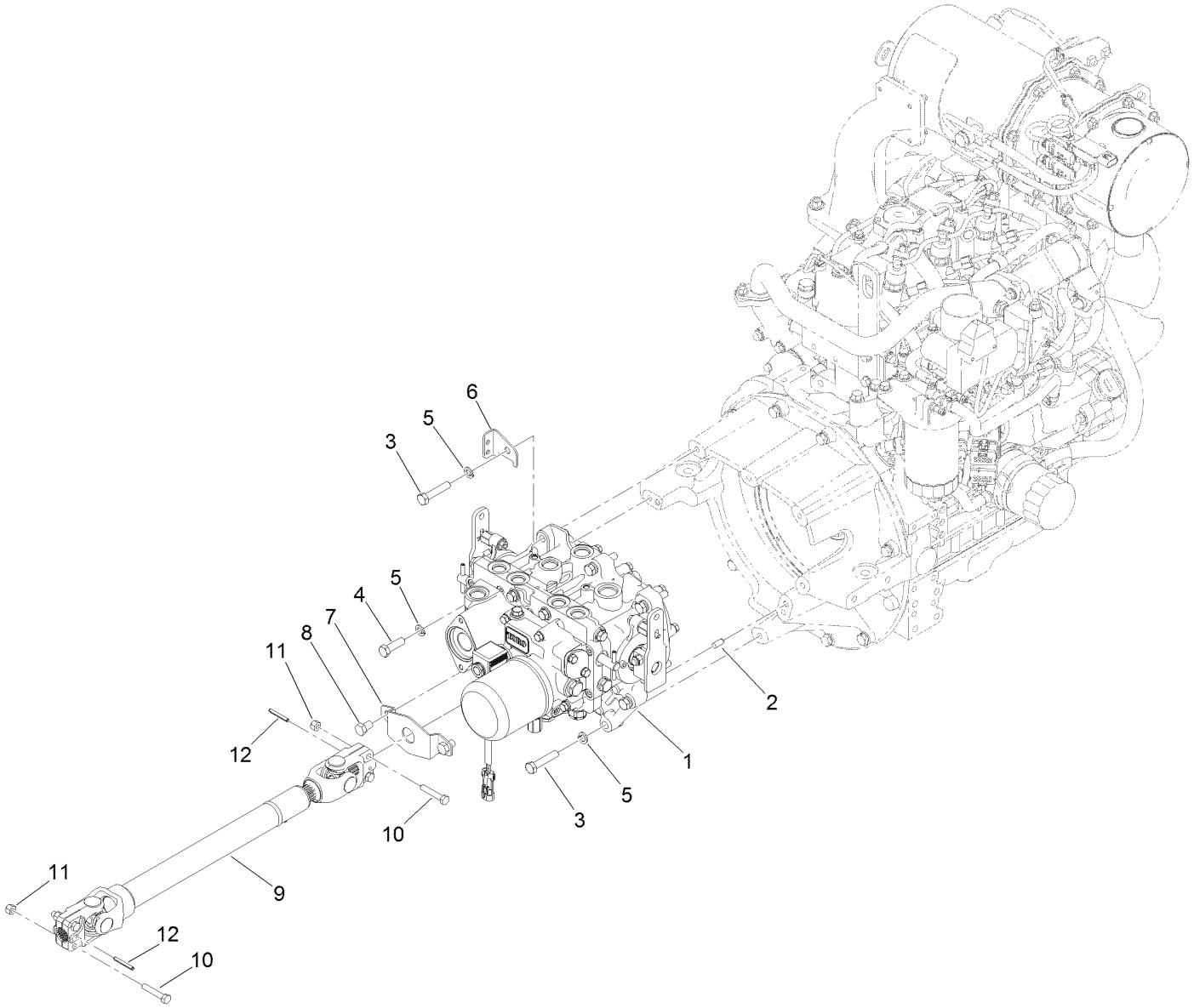

Transmission Component Assembly

Ref.	Part Number	Qty.	Description
1	125-9290	1	Transmisson ASM
2	87-1910	2	Pin-Dowel
3	33115-050	6	Screw-HH
4	33115-035	1	Screw-HH
5	48-9590	7	Washer-Lock
6	120-0239	1	Support-Tube
7	114-4088	1	Shield-Seal
8	33115-016	2	Screw-HH
9	110-3575	1	Driveshaft ASM
10	322-9	4	Screw-HH
11	3296-29	4	Nut-Lock, NI
12	32121-34	2	Pin-Roll

Charge Pump Housing Assembly
Transmission Assembly No. 125-9290

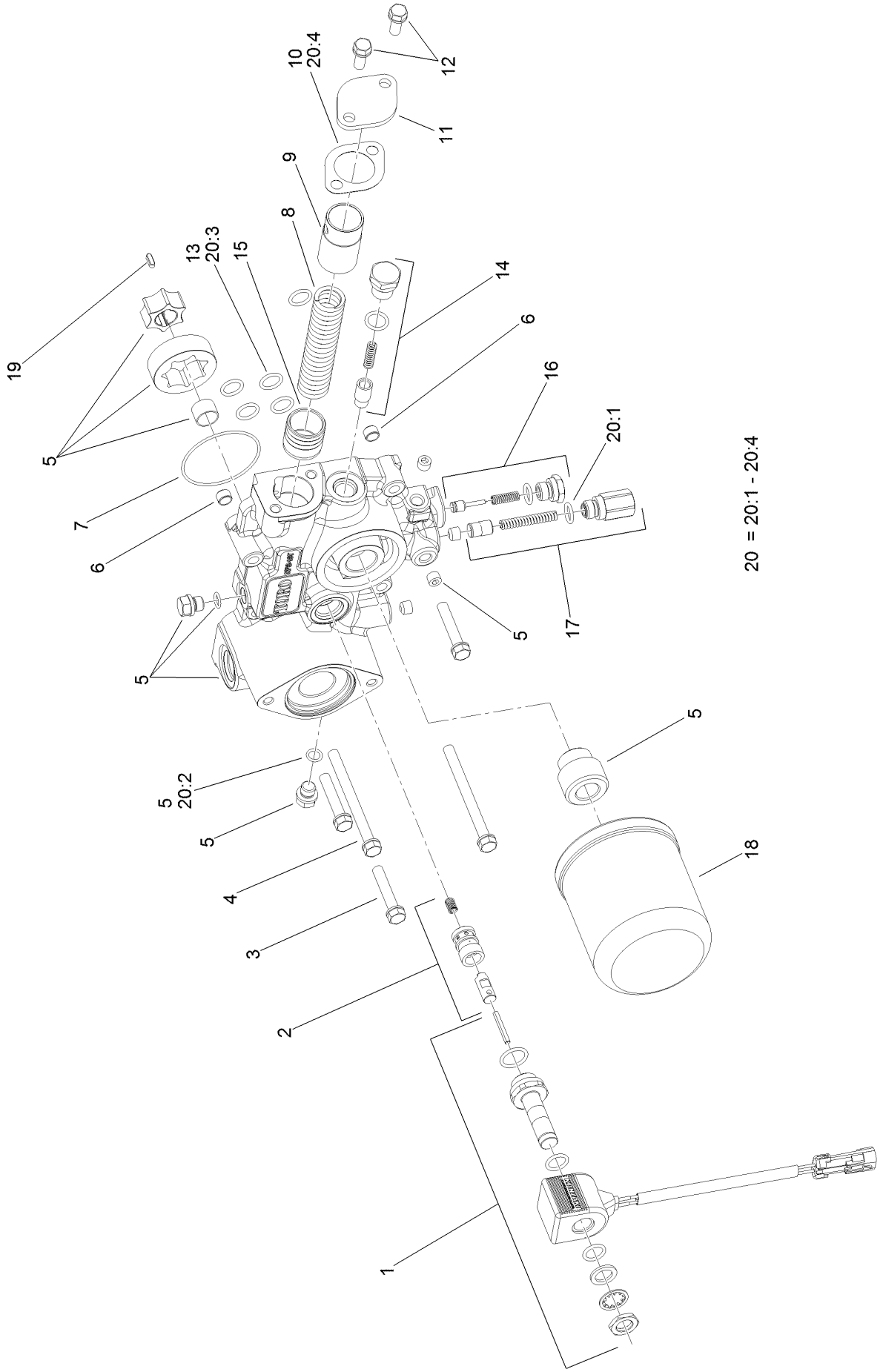

Charge Pump Housing Assembly
Transmission Assembly No. 125-9290 (continued)

Ref.	Part Number	Qty.	Description
1	107-0851	1	Solenoid ASM
2	107-0850	1	Solenoid Valve ASM
3	107-0863	3	Bolt
4	107-0864	2	Bolt
5	107-0840	1	Pump Body ASM
6	107-0848	2	Pin
7	107-0856	1	O-Ring
8	107-0845	1	Spring
9	107-0844	1	Collar
10	107-0847	1	Gasket
11	107-0846	1	Cover
12	93-0457	2	Bolt And Washer ASM
13	104-3298	1	Packing
14	107-0843	1	Filter Bypass Valve ASM
15	107-0818	1	Piston
16	120-5153	1	Charge Relief Valve ASM
17	107-0841	1	Pressure Valve ASM
18	108-5194	1	Filter-Oil, HYD
19	107-0865	1	Key
20	107-0855	1	Charge Pump Seal Kit
20:1	93-0418	2	O-Ring
20:2	107-0817	2	O Ring-Plug
20:3	104-3298	6	Packing
20:4	107-0847	1	Gasket

Center Section Assembly
Transmission Assembly No. 125-9290

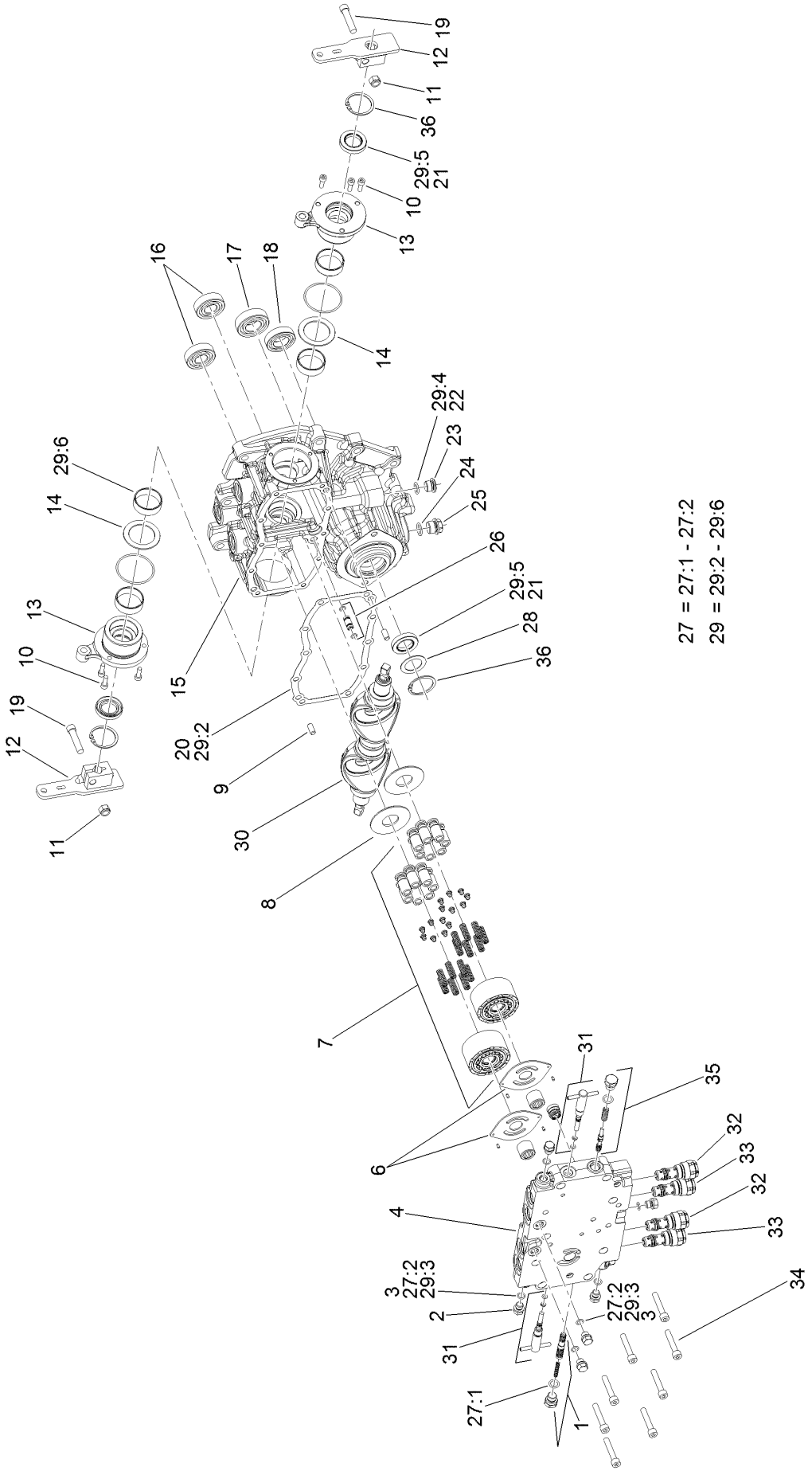

Center Section Assembly
Transmission Assembly No. 125-9290 (continued)

Ref.	Part Number	Qty.	Description
1	107-0807	1	Valve-Flushing, RH
2	107-0857	6	Plug
3	107-0817	6	O Ring-Plug
4	120-5150	1	Center Case ASM
6	107-0805	2	Plate-Valve
7	107-0824	2	Cylinder Block ASM
8	107-0830	2	Plate-Thrust
9	92-0765	4	Pin-Parallel
10	107-0859	6	Bolt
11	120-6681	2	U-Nut
12	131-5505	2	Arm-Control
13	107-0832	2	Side Cover ASM
14	107-0829	2	Washer
15	120-5151	1	Pump Housing ASM
16	107-0826	2	Bearing
17	107-0821	1	Bearing
18	107-0838	1	Bearing
19	120-6682	2	Bolt
20	107-0810	2	Gasket-Case, Center
21	107-0814	1	Seal
22	104-3298	1	Packing

Ref.	Part Number	Qty.	Description
23	107-0861	1	Plug-NPTF
24	237-79	1	O-Ring
25	107-0867	1	Plug
26	107-0812	1	Pipe
27	107-0852	1	Center Case Seal Kit
27:1	93-0418	2	O-Ring
27:2	107-0817	6	O Ring-Plug
28	107-0813	1	Spacer
29	107-0853	1	Pump Housing Seal Kit
29:2	107-0810	1	Gasket-Case, Center
29:3	107-0817	2	O Ring-Plug
29:4	104-3298	1	Packing
29:5	107-0814	3	Seal
29:6	107-0825	4	Ring-Seal
30	120-6679	2	Plate-Swash
31	107-0808	2	Valve-Bypass
32	107-0804	2	Valve-Rear
33	107-0803	2	Valve-Front
34	107-0863	8	Bolt
35	107-0806	1	Valve-Flushing, LH
36	92-0757	2	Ring-Snap

Gear Case and Clutch Assembly
Transmission Assembly No. 125-9290

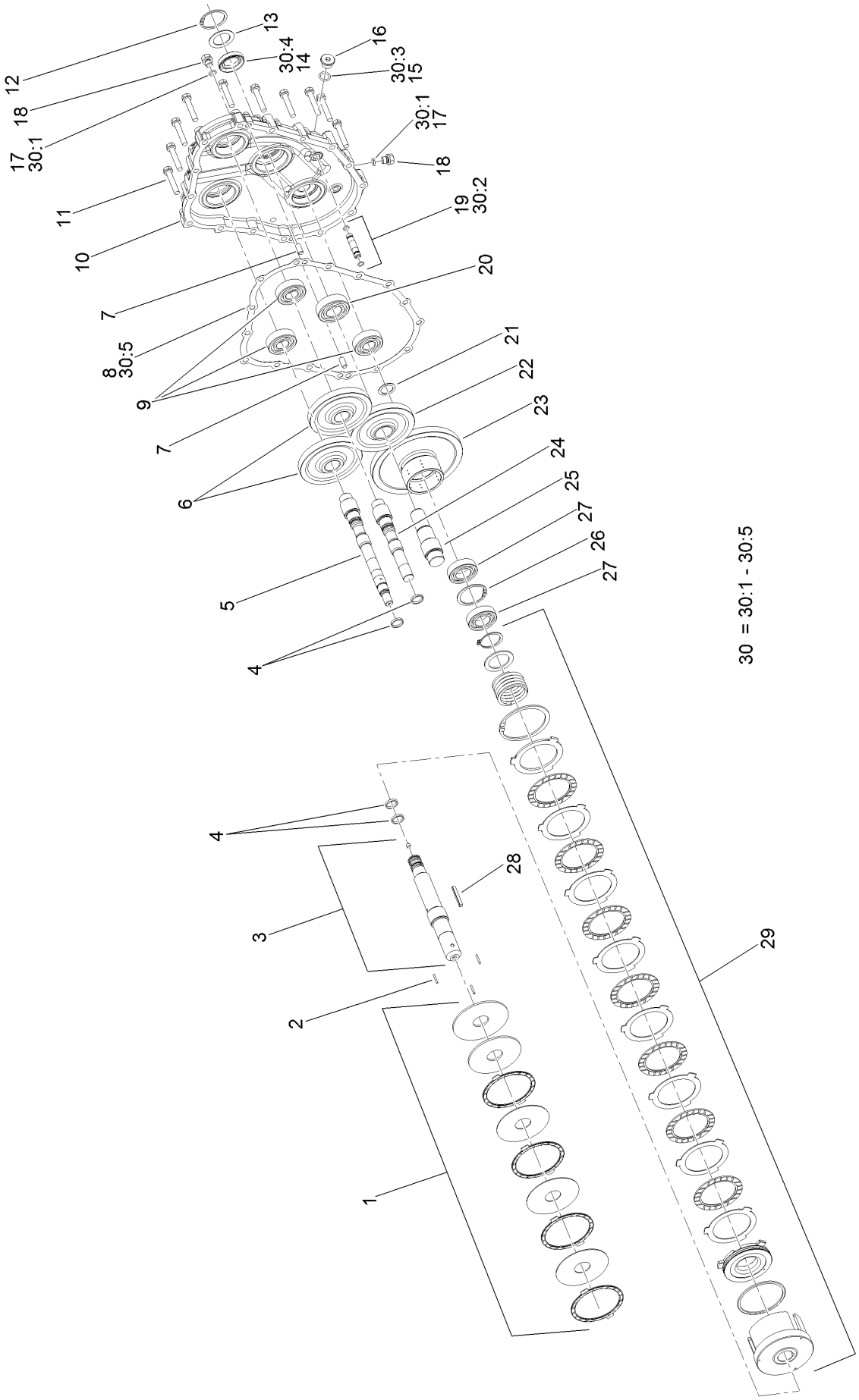

Gear Case and Clutch Assembly
Transmission Assembly No. 125-9290 (continued)

Ref.	Part Number	Qty.	Description
1	107-0839	1	PTO Brake ASM
2	107-0837	3	Rod-Push
3	107-0833	1	PTO Shaft ASM
4	107-0825	2	Ring-Seal
5	107-0827	1	Shaft-Pump
6	107-0823	2	Gear-Pump
7	92-0765	4	Pin-Parallel
8	107-0816	1	Gasket-Housing, Gear
9	107-0826	4	Bearing
10	120-5152	1	Housing-Case, Gear
11	107-0863	13	Bolt
12	92-0757	1	Ring-Snap
13	107-0813	1	Spacer
14	107-0814	1	Seal
15	104-3298	1	Packing
16	107-0861	1	Plug-NPTF
17	107-0817	6	O Ring-Plug
18	107-0857	6	Plug
19	107-0811	1	Pipe
20	107-0821	2	Bearing
21	107-0836	1	Spacer
22	107-0820	1	Gear-Input
23	107-0834	1	Gear-PTO
24	107-0822	1	Shaft-Pump
25	107-0819	1	Shaft-Input
26	92-0758	1	Ring-Snap
27	107-0838	3	Bearing
28	107-0866	1	Key
29	107-0835	1	Clutch Cylinder ASM
30	107-0854	1	Gear Housing Seal Kit
30:1	107-0817	2	O Ring-Plug
30:2		2	O-Ring ●
30:3	104-3298	1	Packing
30:4	107-0814	1	Seal
30:5	107-0816	1	Gasket-Housing, Gear

● Not serviced separately

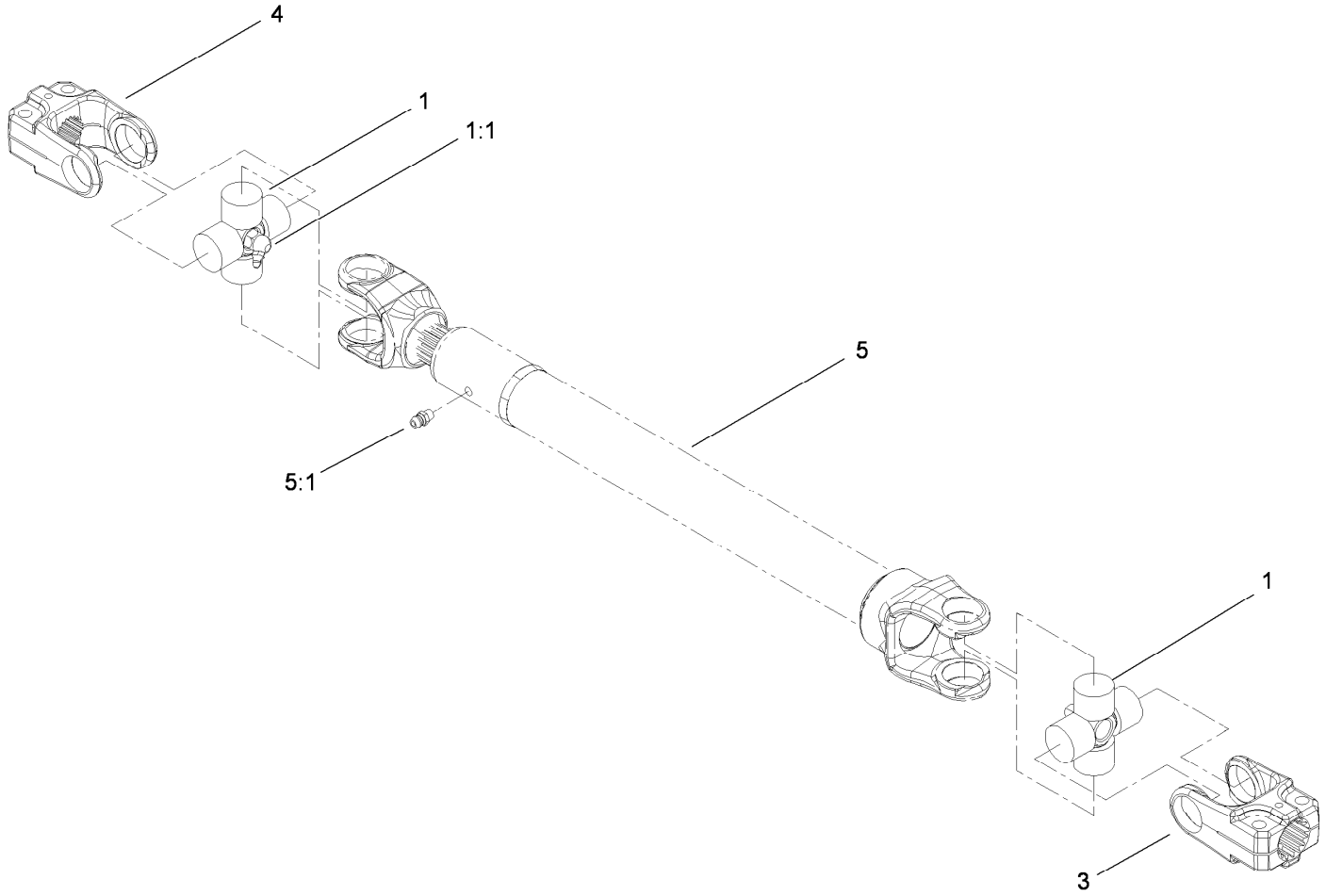

Driveshaft Assembly No. 110-3575

Ref.	*Part Number*	*Qty.*	*Description*
1	112-1687	2	Cross And Bearing Kit
1:1	62-3820	1	Fitting-Grease
3	54-9040	1	Yoke-End
4	54-9090	1	Yoke-End
5		1	Tube-Yoke, Slip ●
5:1	302-22	1	Fitting-Grease

● Not serviced separately

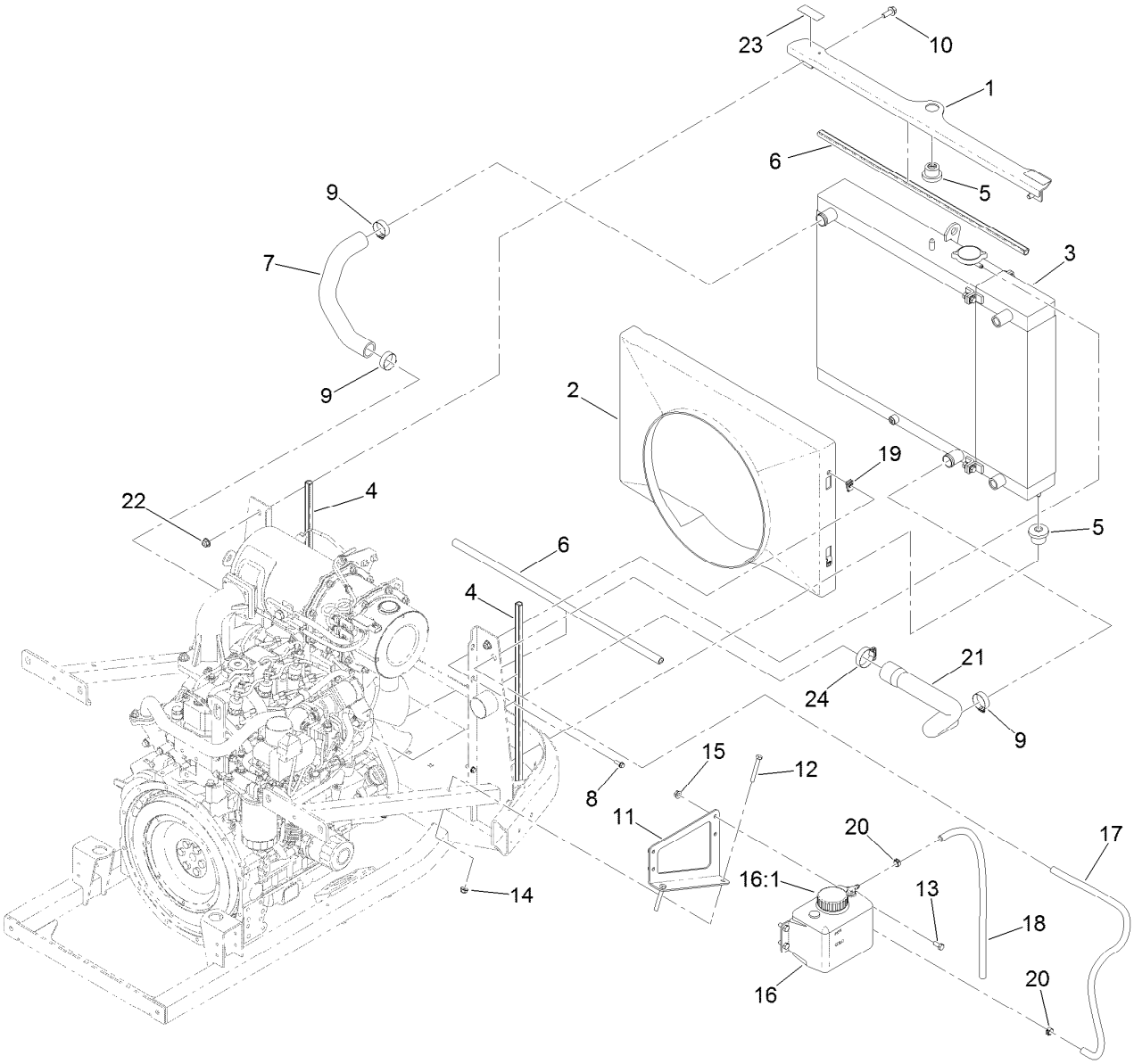

Radiator Component Assembly

Ref.	Part Number	Qty.	Description
1	125-2838-03	1	Support-Radiator
2	125-2840	1	Shroud-Fan
3		1	Radiator/Cooler ASM ■●
4	119-1426	2	Seal-Bulb
5	119-1422	3	Mount-Isolator
6	119-1427	2	Seal-Bulb
7	125-2846	1	Hose-Radiator, Upper
8	32105-15	4	Screw-HWH
9	2412-34	3	Clamp-Hose
10	3234-42	2	Screw-HHF
11	125-2816-03	1	Bracket-Overflow
12	322-11	2	Screw-HH
13	322-3	4	Screw-HH

Ref.	Part Number	Qty.	Description
14	104-8300	2	Nut-Flange, NI
15	32128-25	4	Nut-HF
16	120-5573	1	Coolant Reservoir ASM
16:1	87-7050	1	Cap-Reservoir
17	110-3257	1	Hose-Fuel
18	110-6187	1	Hose-Fuel
19	107069	4	Clip
20	92-2379	2	Clamp-Hose
21	125-2845	1	Hose-Radiator, Lower
22	104-8301	2	Nut-Flange, NI
23	117-4766	2	Decal-Warning, Fan
24	2412-111	1	Clamp

● See following pages

■ Not serviced separately

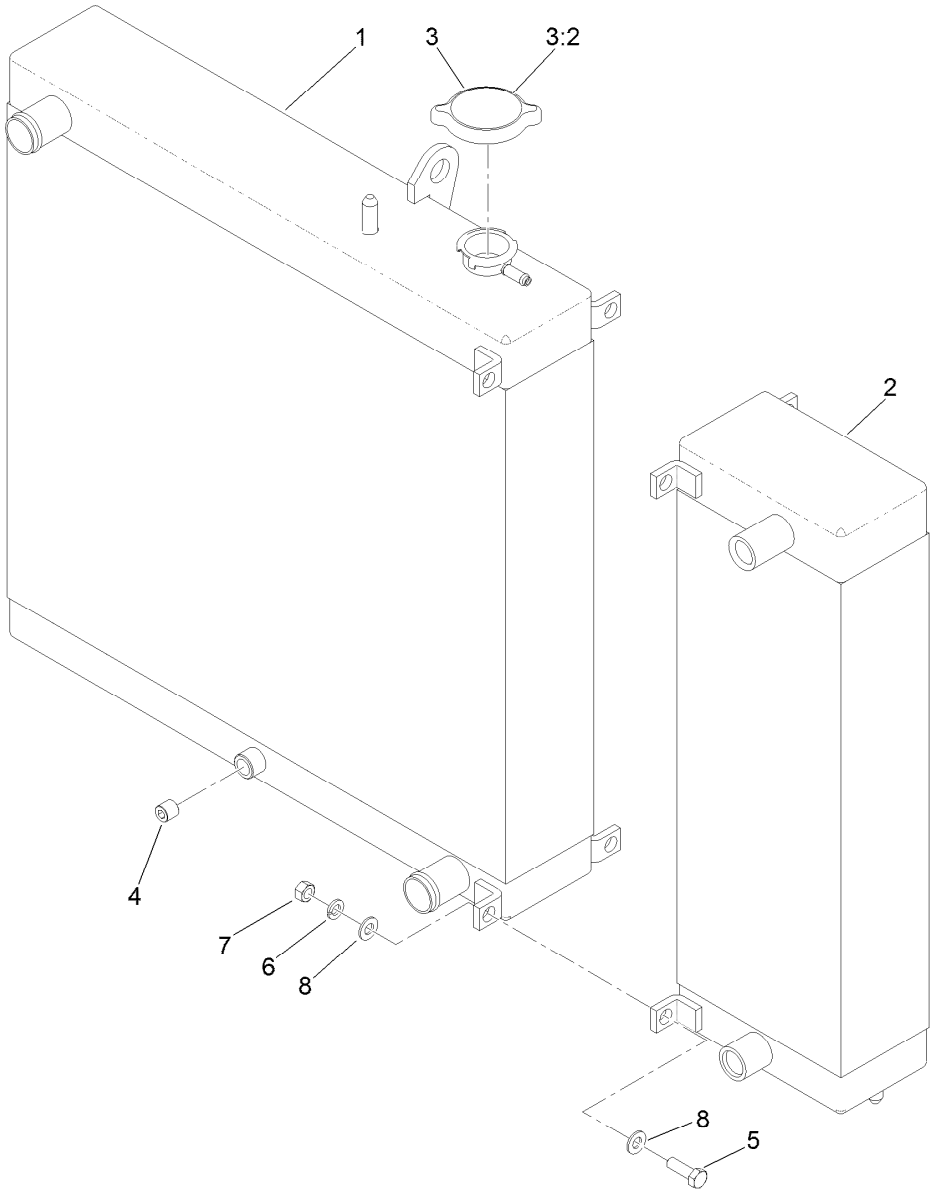

Radiator and Cooler Assembly

Ref.	Part Number	Qty.	Description
1	125-4354	1	Radiator
2	125-4355	1	Oil Cooler
3	119-1430	1	Radiator Cap ASM
3:2	117-3276	1	Decal-Danger
4	99-8551	1	Plug-Pipe
5	322-5	4	Screw-HH
6	3253-4	4	Washer-Lock
7	3217-6	4	Nut-Hex
8	3256-23	4	Washer-Flat

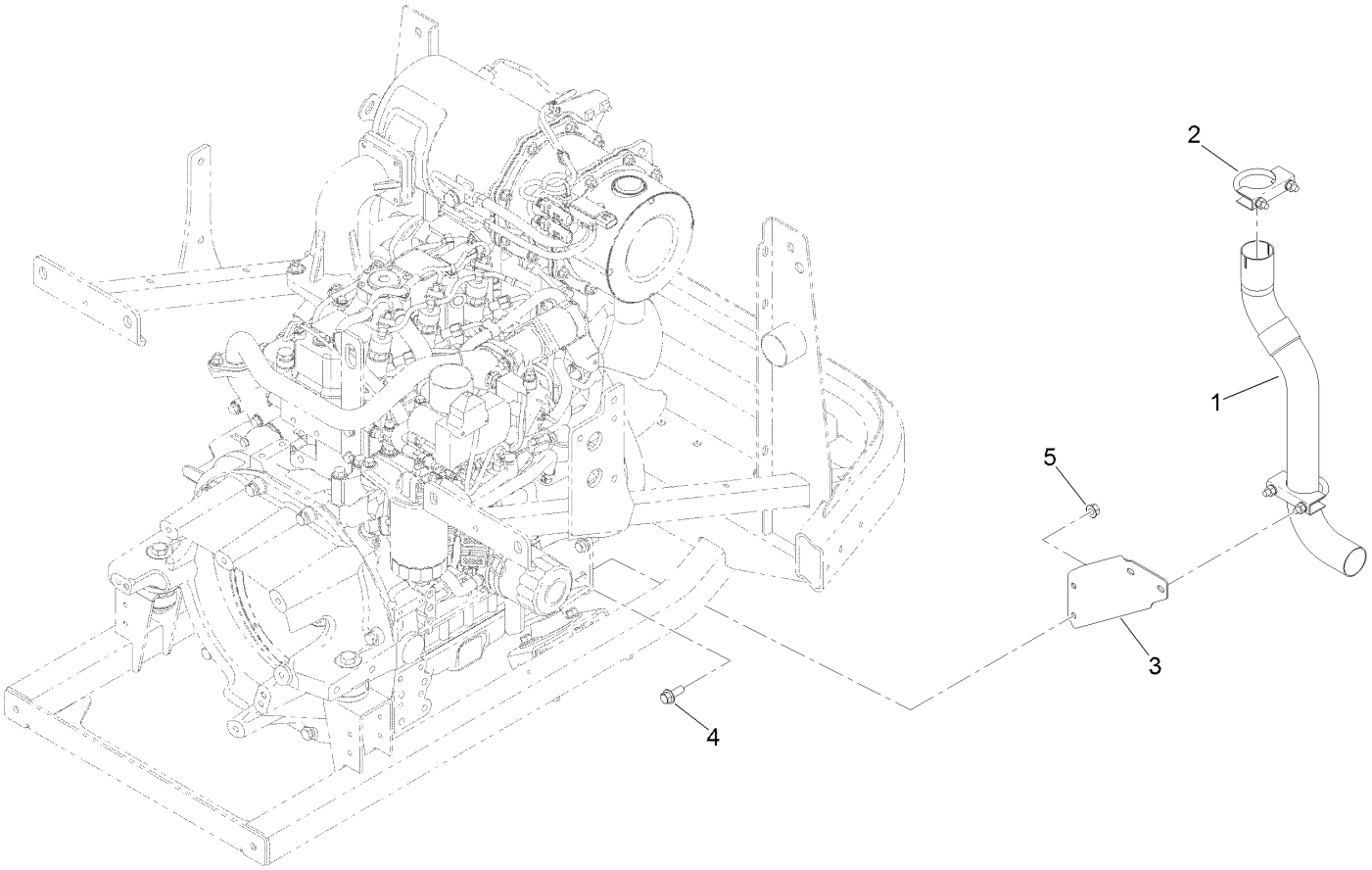

Muffler Assembly

Ref.	Part Number	Qty.	Description
1	125-2844	1	Pipe-Exhaust
2	18-2130	2	Clamp
3	127-4860-03	1	Bracket-Exhaust
4	3234-42	2	Screw-HHF
5	32128-21	2	Nut-HF

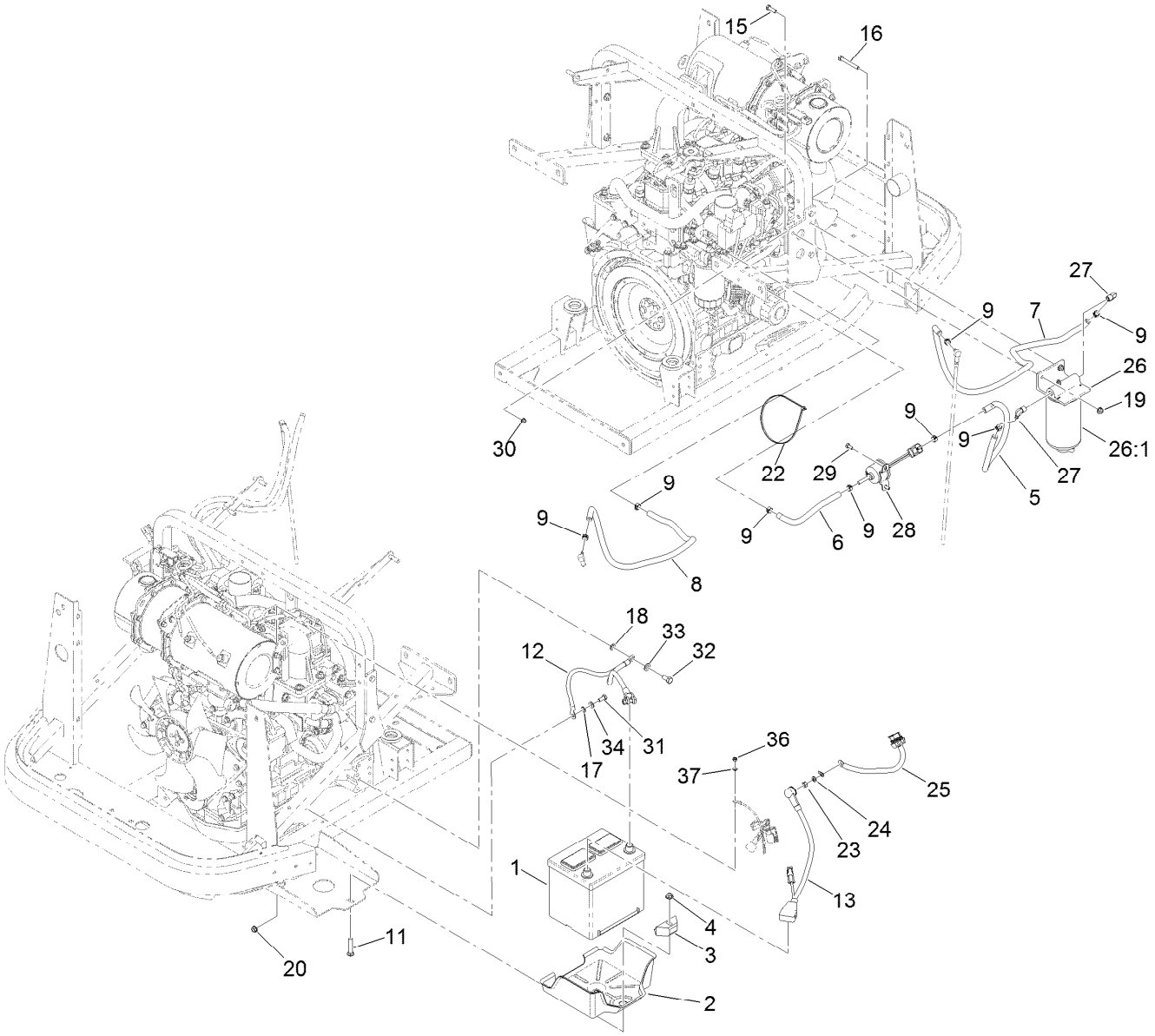

Battery and Fuel Delivery Assembly

Ref.	Part Number	Qty.	Description
1	106-5187	1	Battery-Dry
2	127-4866	1	Tray-Battery
3	66-2490	1	Retainer-Battery
4	104-8301	1	Nut-Flange, NI
5	110-4109	1	Hose-Fuel
6	110-4124	1	Hose-Fuel
7	109-0277	1	Hose-Fuel
8	110-9662	1	Hose-Fuel
9	92-2379	8	Clamp-Hose
11	3231-6	1	Screw-CARR
12	122-0266	1	Cable-Battery, Negative
13	119-4378	1	Cable-Battery, Positive
15	322-5	1	Screw-HH
16	322-12	1	Screw-HH
17	3255-8	1	Washer-Lock
18	3255-9	1	Washer-Lock
19	104-8300	2	Nut-Flange, NI

Ref.	Part Number	Qty.	Description
20	32128-25	1	Nut-HF
22	3290-379	1	Tie-Cable
23	33014-00	1	Nut-Hex
24	3253-4	1	Washer-Lock
25	99-3441	1	Harness-Wire, Fusible Link
26	125-2914	1	Separator Filter ASM
26:1	125-2915	1	Filter-Spin On
27	353-781	2	Fitting-Elbow
28	121-5613	1	Pump-Fuel, Electric
29	321-3	2	Screw-HH
30	104-7201	2	Nut-Flange, NI
31	322-3	1	Screw-HH
32	33115-020	1	Screw-HH
33	3256-24	1	Washer-Flat
34	3256-23	1	Washer-Flat
36	33013-00	1	Nut-Hex
37	43-5930	1	Washer-Lock, Spring

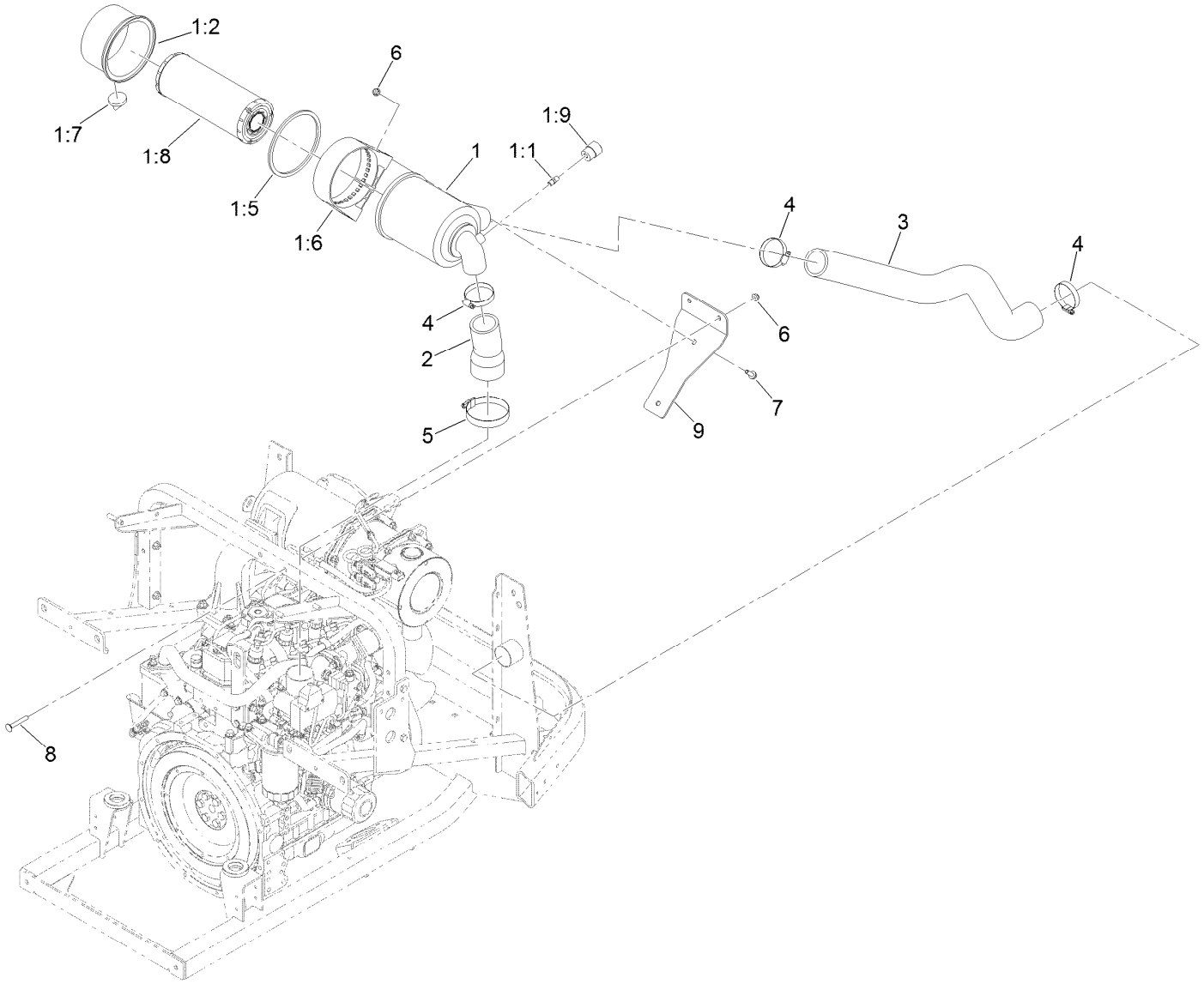

Air Cleaner Assembly

Ref.	Part Number	Qty.	Description
1	104-3428	1	Air Cleaner ASM
1:1	105-4292	1	Nipple-Pipe
1:2	104-0497	1	Cover
1:5	104-4897	1	Gasket
1:6	98-4525	1	Bracket-Cleaner, Air
1:7	104-0498	1	Valve-Vacuator
1:8	108-3810	1	Filter-Air
1:9	93-9164	1	Indicator-Mini

Ref.	Part Number	Qty.	Description
2	125-2848	1	Hose-Inlet, Air
3	125-2849	1	Hose-Draw, Air
4	2412-130	3	Clamp-Hose
5	2412-125	1	Clamp-Hose
6	104-8300	4	Nut-Flange, NI
7	3234-17	2	Screw-HHF
8	3230-7	2	Bolt-CARR
9	125-2847-03	1	Bracket-Cleaner, Air

Neutral System Assembly

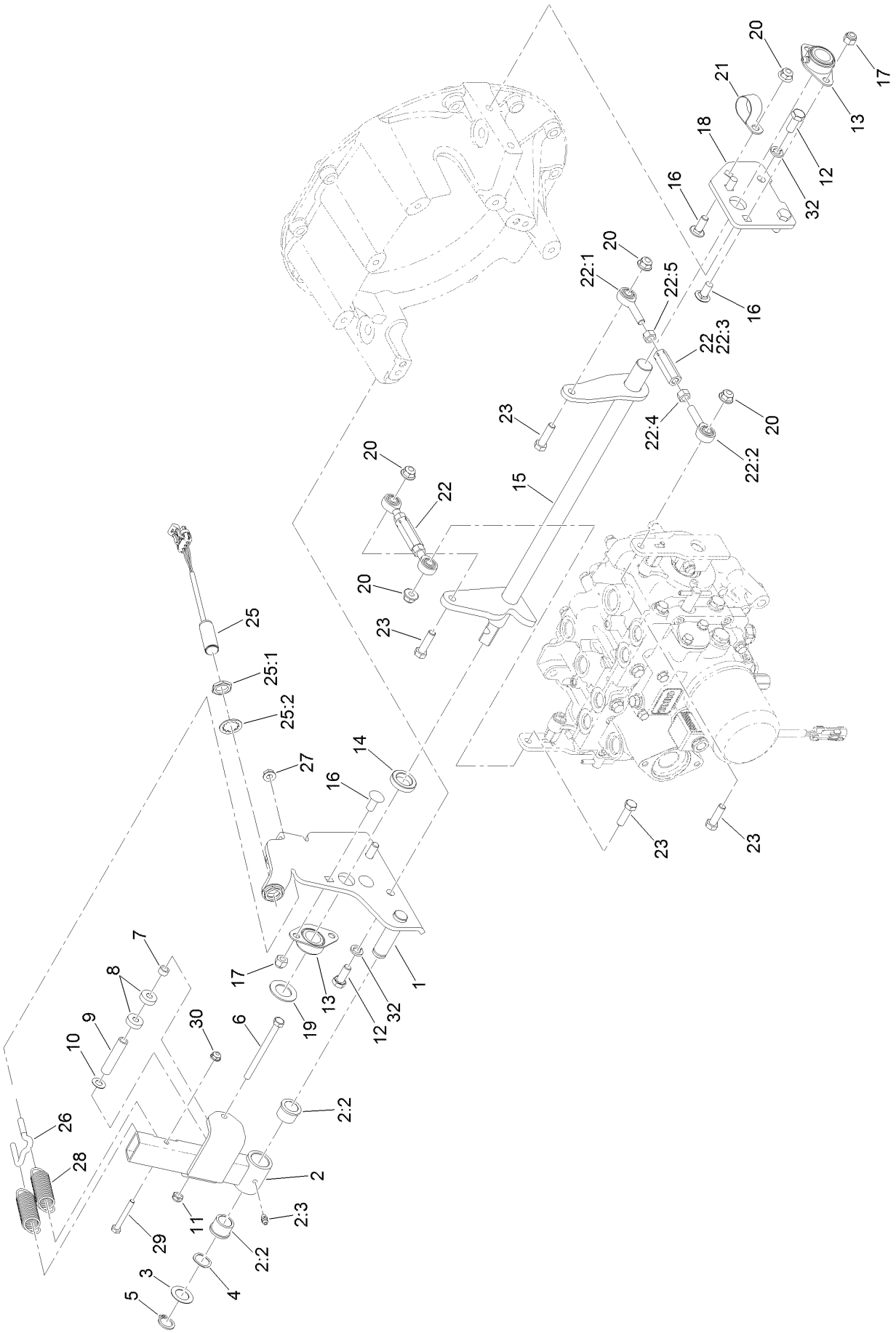

Neutral System Assembly (continued)

Ref.	Part Number	Qty.	Description
1	131-5530-03	1	Plate-End, Neutral
2	125-4366	1	Neutral Arm ASM
2:2	256-113	2	Bushing-Flange
2:3	302-5	1	Fitting-Grease
3	3-6498	1	Washer-Thrust
4	119-4164	1	Washer-Wave
5	32120-93	1	Ring-Retaining
6	322-19	1	Screw-HH
7	85-9120	1	Spacer-Pivot, Tilt
8	251-307	2	Bearing-Ball
9	125-2877	1	Spacer
10	73-0041	1	Washer-Thrust
11	3296-47	1	Nut-Lock, NI
12	120-9635	4	Screw-HH
13	131-5529	2	Bearing, Side Flange
14	125-2879	1	Spacer-Shaft, Neutral
15	125-2865-03	1	Neutral Shaft ASM
16	3231-27	5	Screw-CARR
17	3296-39	4	Nut-Lock, NI
18	125-2869-03	1	Plate-End, Neutral
19	119-2332	1	Washer-Flat
20	104-8301	5	Nut-Flange, NI
21	2412-126	1	R-Clamp
22	125-2870	2	Link ASM
22:1	125-4389	1	Bearing-End, Rod
22:2	2411-36	1	Bearing-End, Rod
22:3	125-4390	1	Hex-Adjustment
22:4	3219-3	1	Nut-Hex
22:5	3219-20	1	Nut-Hex, LH
23	323-29	4	Screw-HH
25	115-5300	1	Proximity Switch ASM
25:1	117-3207	2	Nut-Hex
25:2	117-3208	2	Washer-Lock, Internal Tooth
26	131-3376	1	Hook-Spring, Dual
27	32128-25	1	Nut-HF
28	131-3374	2	Spring-Extension
29	321-11	1	Screw-HH
30	104-7201	1	Nut-Flange, NI
32	48-9590	4	Washer-Lock

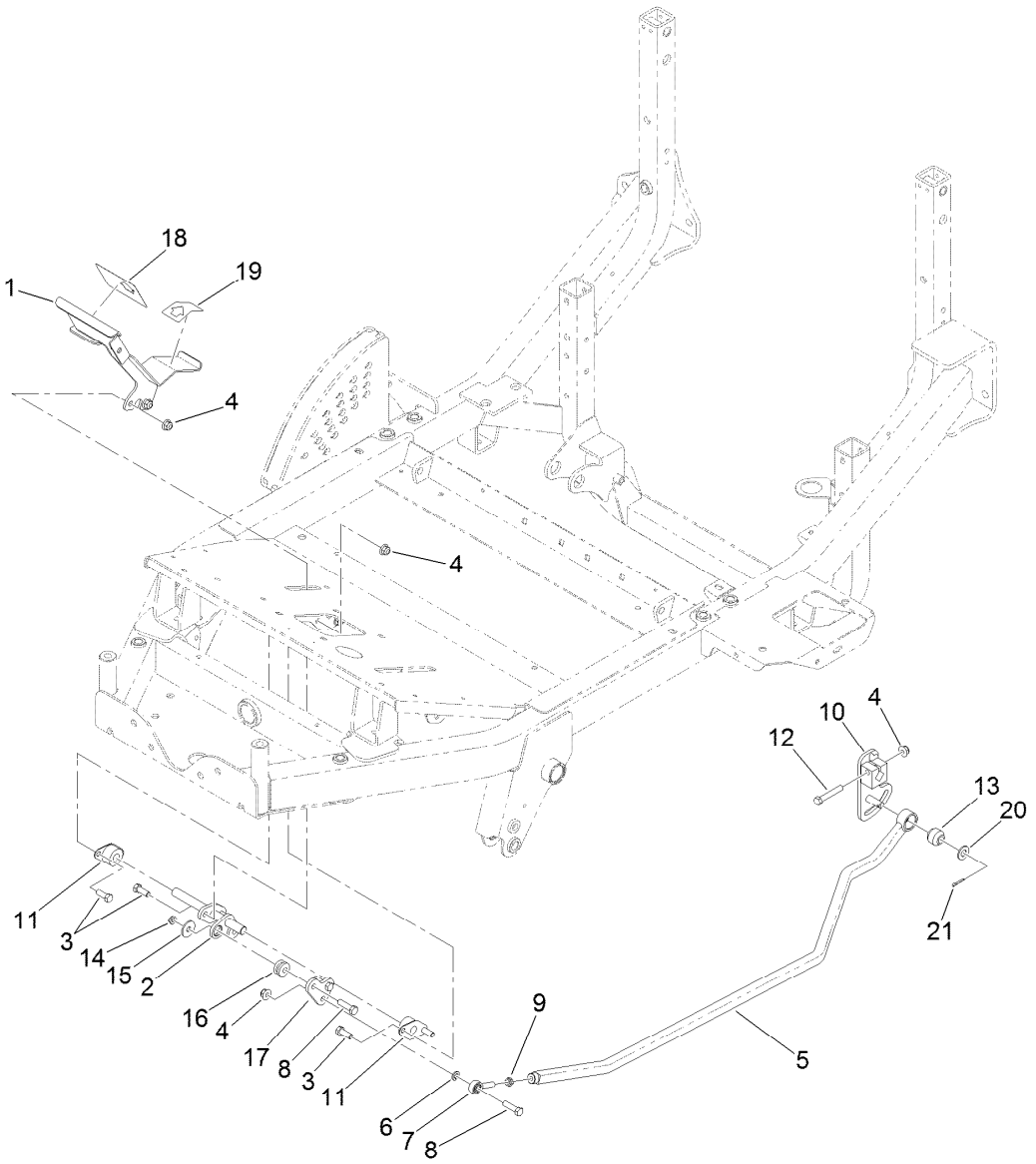

Traction Pedal Assembly

Ref.	Part Number	Qty.	Description
1	117-3070-01	1	Pedal
2	125-4402	1	Pivot-Pedal, Isolated
3	323-6	6	Screw-HH
4	104-8301	8	Nut-Flange, NI
5	130-4763-03	1	Traction Rod ASM
6	3253-21	1	Washer-Lock
7	2411-36	1	Bearing-End, Rod
8	323-29	3	Screw-HH
9	3220-3	1	Nut-HJ
10	130-4760-03	1	Lever-Traction
11	256-236	2	Bearing-Mount, Flange

Ref.	Part Number	Qty.	Description
12	323-11	1	Screw-HH
13	23-2270	1	Bushing-Rubber
14	3296-59	2	Nut-Lock, NI
15	93-8806	2	Washer-Hardened
16	63-9750	2	Mount
17	125-4401	1	Plate-Linkage, Traction
18	94-3307	1	Pad-Pedal, Traction
19	94-3308	1	Pad-Pedal, Traction
20	3256-26	1	Washer-Flat
21	3272-10	1	Pin-Cotter

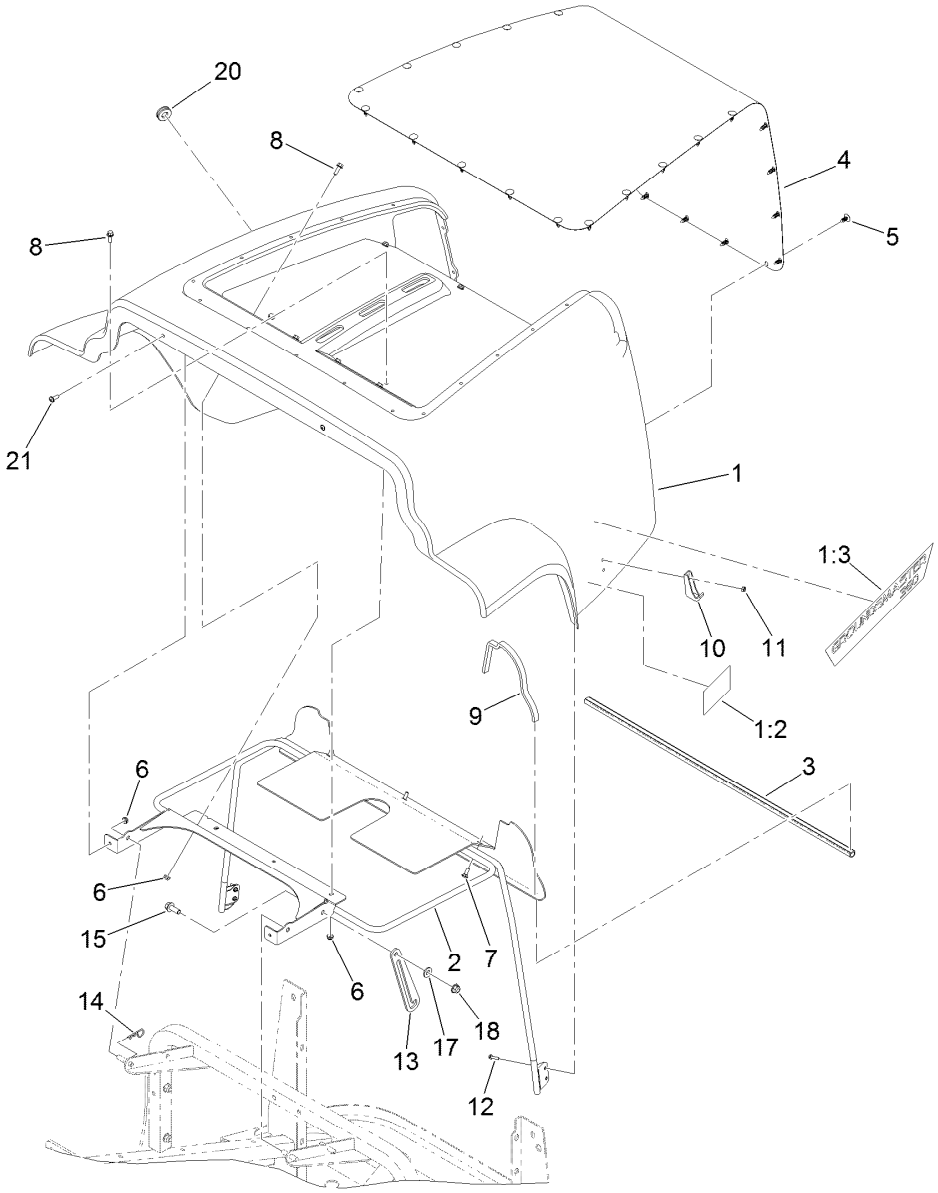

Hood Assembly

Ref.	Part Number	Qty.	Description
1	127-4879	1	Hood ASM
1:2	117-3270	2	Decal-Danger
1:3	117-3279	2	Decal-Hood
2	125-9228-03	1	Hood Mount ASM
3	115-0423	1	Seal-Bulb
4	125-2881-03	1	Screen-Hood
5	117-2382	27	Plug-Plastic
6	104-7201	11	Nut-Flange, NI
7	3229-1	3	Bolt-CARR
8	3234-4	6	Screw-HHF
9	125-4449	2	Seal-Foam

Ref.	Part Number	Qty.	Description
10	103-2897	2	Latch-Catch
11	3296-2	4	Nut-Lock, NI
12	32105-13	4	Screw-HWH
13	125-2899-03	1	Rod-Prop
14	9335054	1	Pin-Hair
15	3234-42	1	Screw-HHF
17	66-2920	1	Washer-Friction
18	104-8301	1	Nut-Flange, NI
20	104-1453	1	Grommet
21	92-3911	2	Screw-HSBH

Deck Lift Valve and Hydraulic Fitting Assembly

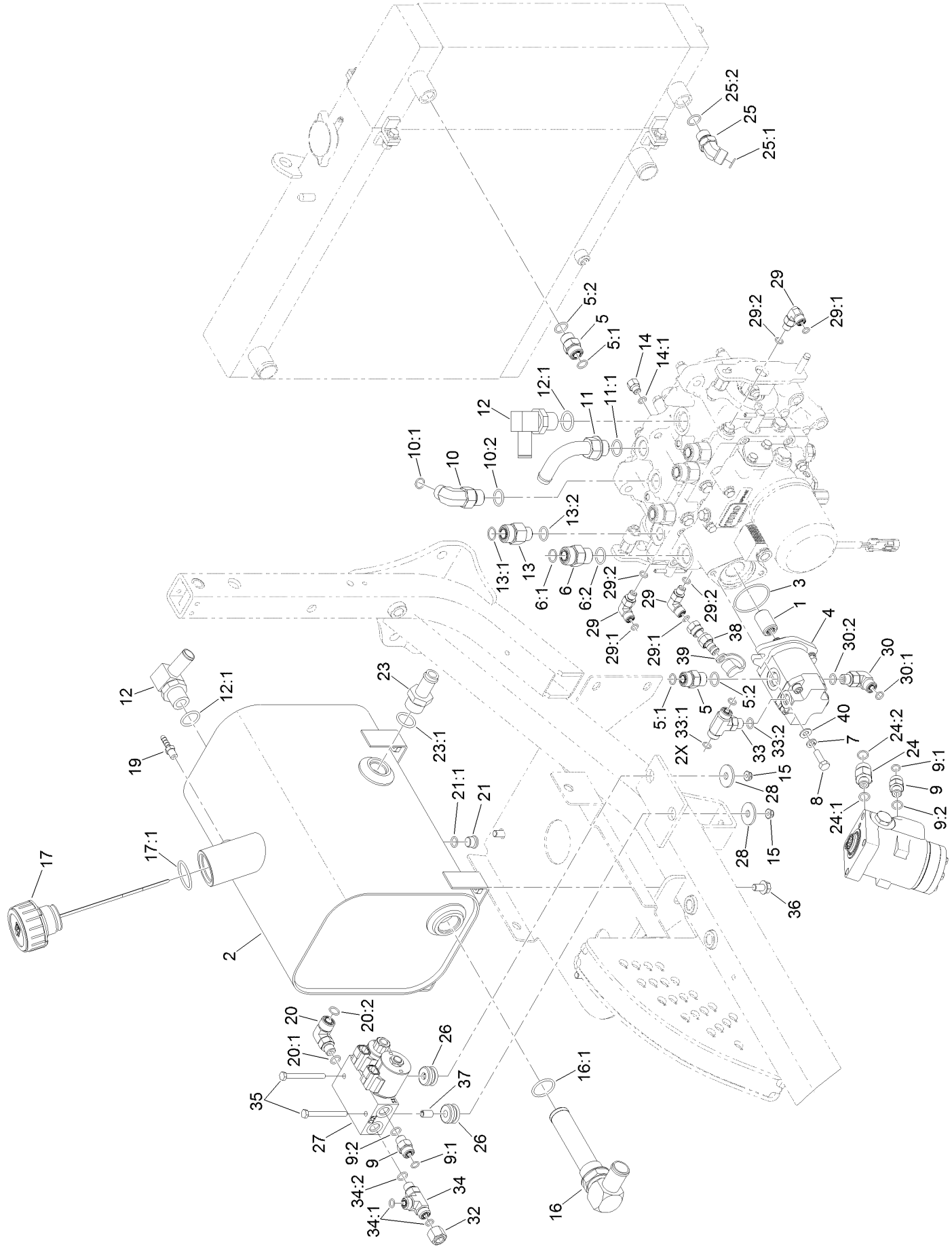

Deck Lift Valve and Hydraulic Fitting Assembly (continued)

Ref.	Part Number	Qty.	Description
1	108-9920	1	Coupler-Spline
2	117-3372	1	Tank-Hydraulic, Metal
3	108-9919	1	O-Ring
4	115-0375	1	Gear Pump ASM
5	340-4	2	Fitting-HYD, Straight
5:1	237-30	1	O-Ring
5:2	237-79	1	O-Ring
6	340-7	1	Adapter
6:1	237-65	1	O-Ring
6:2	237-80	1	O-Ring
7	3253-4	2	Washer-Lock
8	33114-025	2	Screw-HH
9	340-2	5	Fitting-HYD, Straight
9:1	237-22	1	O-Ring
9:2	237-42	1	O-Ring
10	340-105	1	Fitting-HYD, 90 DEG
10:1	237-80	1	O-Ring
10:2	237-30	1	O-Ring
11	110-5522	1	Fitting-Elbow, 90
11:1	237-80	1	O-Ring
12	353-987	2	Fitting-HYD, 90 DEG (Barbed)
12:1	237-81	1	O-Ring
13	340-155	4	Fitting-HYD, Straight
13:1	237-79	1	O-Ring
13:2	237-151	1	O-Ring
14	110-5536	1	Fitting-HYD, Adapter
14:1	237-78	1	O-Ring
15	104-7201	2	Nut-Flange, NI
16	105-0204	1	Strainer Fitting ASM
16:1	237-146	1	O-Ring
17	117-3389	1	Cap-Tank, Hydraulic
17:1	237-101	1	O-Ring
19	94-7220	1	Fitting-Barb, Hose
20	340-99	1	Fitting-HYD, 90 DEG
20:1	237-30	1	O-Ring
20:2	237-42	1	O-Ring
21	353-989	1	Plug-Hex, Hollow
21:1	237-42	1	O-Ring
23	354-73	1	Fitting-Straight
23:1	237-81	1	O-Ring
24	340-5	1	Fitting-Straight
24:1	237-42	1	O-Ring
24:2	237-30	1	O-Ring
25	340-101	1	Fitting-HYD, 45 DEG
25:1	237-30	1	O-Ring
25:2	237-79	1	O-Ring
26	63-9750	2	Mount
27	131-1934	1	Deck Lift Valve ASM
28	63-8410	2	Washer
29	340-132	3	Fitting-HYD, 90 DEG
29:1	237-78	1	O-Ring
29:2	237-21	1	O-Ring
30	340-77	1	Fitting-HYD, 90 DEG
30:1	237-22	1	O-Ring
30:2	237-42	1	O-Ring
32	340-117	1	Cap
33	340-94	1	Adapter
33:1	237-22	2	O-Ring
33:2	237-42	1	O-Ring
34	340-86	1	Fitting-Tee
34:1	237-22	2	O-Ring
34:2	237-42	1	O-Ring
35	321-14	2	Screw-HH
36	32144-15	4	Screw-HHFTF
37	80-0650	2	Spacer-Tubular
38	115-8886	1	Nipple-Test
39	354-79	1	Cap-Dust
40	3256-23	2	Washer-Flat

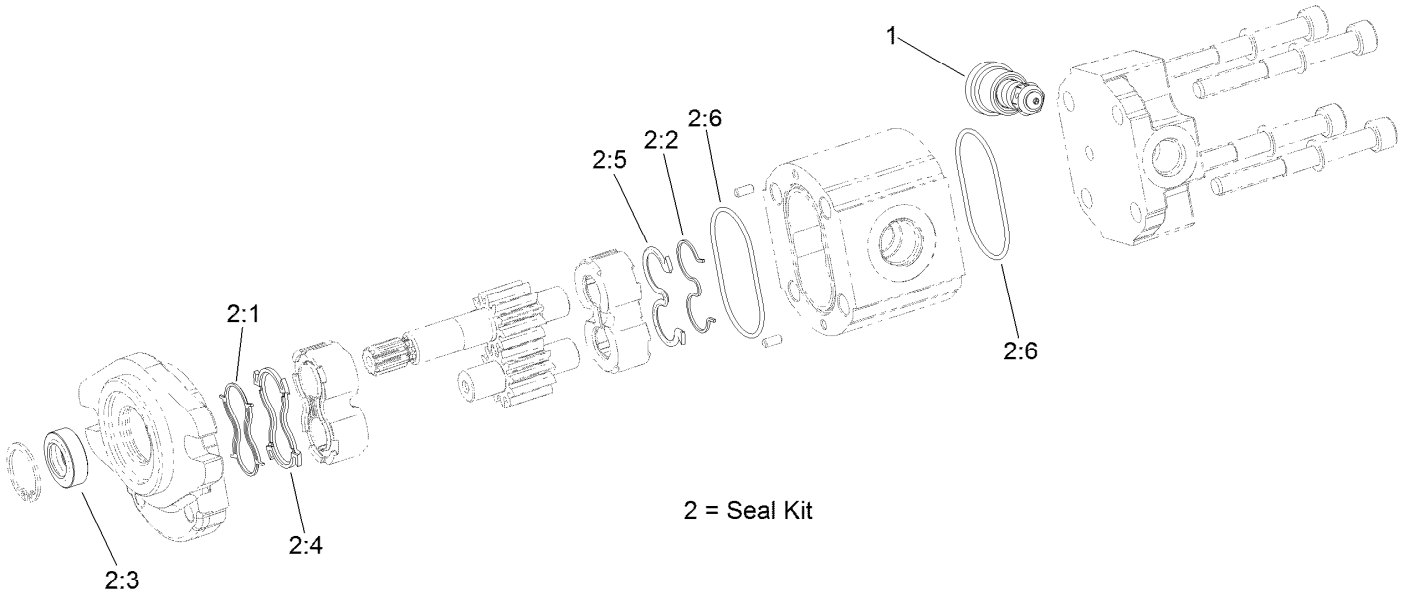

Hydraulic Gear Pump Assembly No. 115-0375

Ref.	*Part Number*	*Qty.*	*Description*
1	115-0376	1	Valve-Relief, 125 Bar
2	112-0199	1	Seal Kit
2:1		1	Seal-Anti Extrusion ●
2:2		1	Seal-Anti Extrusion ●
2:3		1	Seal-Shaft ●
2:4		1	Seal-Upper ●
2:5		1	Seal ●
2:6		2	O-Ring ●

● Not serviced separately

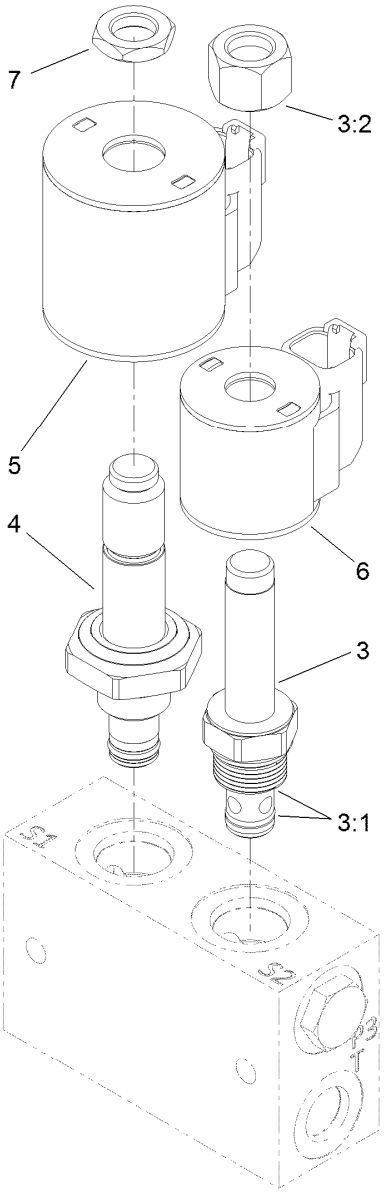

Valve Assembly No. 131-1934

Ref.	Part Number	Qty.	Description
3	107-7517	1	Valve-Solenoid
3:1	105-9156	1	Seal Kit
3:2	107-7812	1	Nut-Solenoid
4	131-1935	1	Valve-Solenoid
5	115-3021	1	Coil-12V
6	119-8036	1	E Coil-12 Vdc
7	110-2634	1	Nut-Coil

4 Wheel Drive Hydraulic Hose Assembly

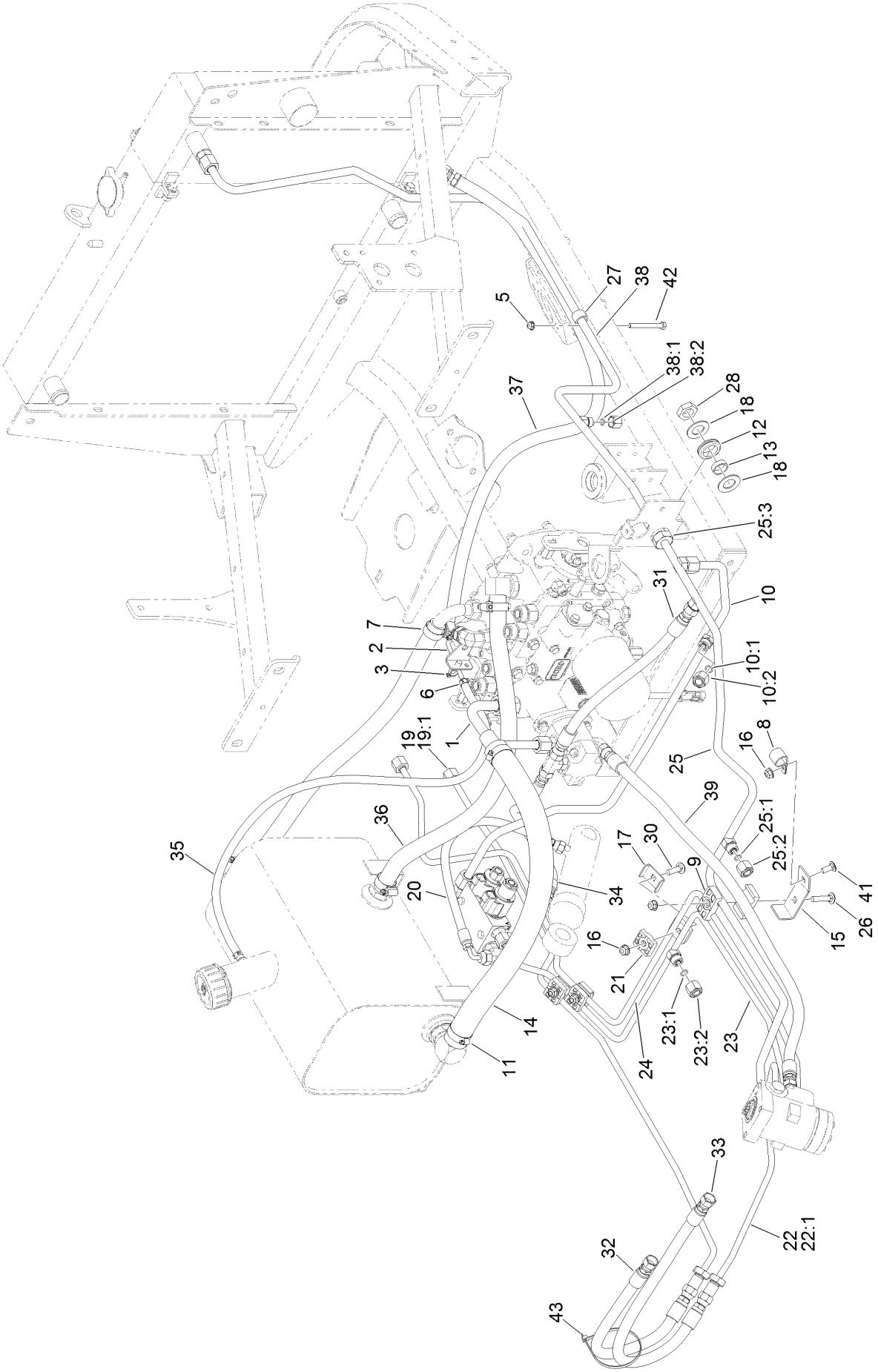

4 Wheel Drive Hydraulic Hose Assembly (continued)

Ref.	Part Number	Qty.	Description
1	115-0184	1	Suction Tube ASM
2	125-2891	1	Tube ASM
3	32180-030	1	Clip-Tie
5	104-7201	1	Nut-Flange, NI
6	2412-98	2	Clamp-Hose
7	2412-129	4	Clamp-Hose
8	2412-4	1	Clamp
9	56-7972	2	Clamp-Tube
10	125-2893	1	Tube ASM
10:1	237-22	1	O-Ring
10:2	340-117	1	Cap
11	2412-34	2	Clamp-Hose
12	240-5	1	Grommet
13	69-8960	1	Spacer
14	117-3200	1	Hose-Suction
15	120-0245	1	Bracket-Support
16	104-8300	5	Nut-Flange, NI
17	119-1418	3	Plate-Clamp
18	69-8930	2	Washer
19	131-3358	1	Steer Manifold/Front Cyl Tube ASM
19:1	237-22	1	O-Ring
20	110-0928	1	Hose-HYD
21	56-7973	6	Clamp-Tube
22	125-2887	1	Steer/Front Tube ASM
22:1	237-22	1	O-Ring
23	125-2890	1	Steer/Lift Tube ASM
23:1	237-22	1	O-Ring
23:2	340-117	1	Cap
24	131-3351	1	Steer/Steer Manifold Tube ASM
25	127-4872	1	Steer/Drain Tube ASM
25:1	237-22	2	O-Ring
25:2	340-117	1	Cap
25:3	237-30	2	O-Ring
26	3230-4	1	Screw-CARR
27	2412-87	1	Clamp-Cable
28	340-127	1	Nut-Bulkhead
30	3230-3	3	Screw-CARR
31	117-3122	1	Hose ASM
32	119-1433	1	Hose ASM
33	100-5629	1	Hose ASM
34	117-3123	1	HYD Hose ASM
35	109-0275	1	Hose-Fuel
36	117-3121	2	Hose ASM
37	117-9937	1	HYD Hose ASM
38	125-2892	1	Drain/Cooler Tube ASM
38:1	237-21	1	O-Ring
38:2	117-3297	1	Fitting-Cap
39	119-8114	1	HYD Hose ASM
41	3230-23	1	Screw-CARR
42	321-15	1	Screw-HH
43	3334-945	1	Tie-Cable

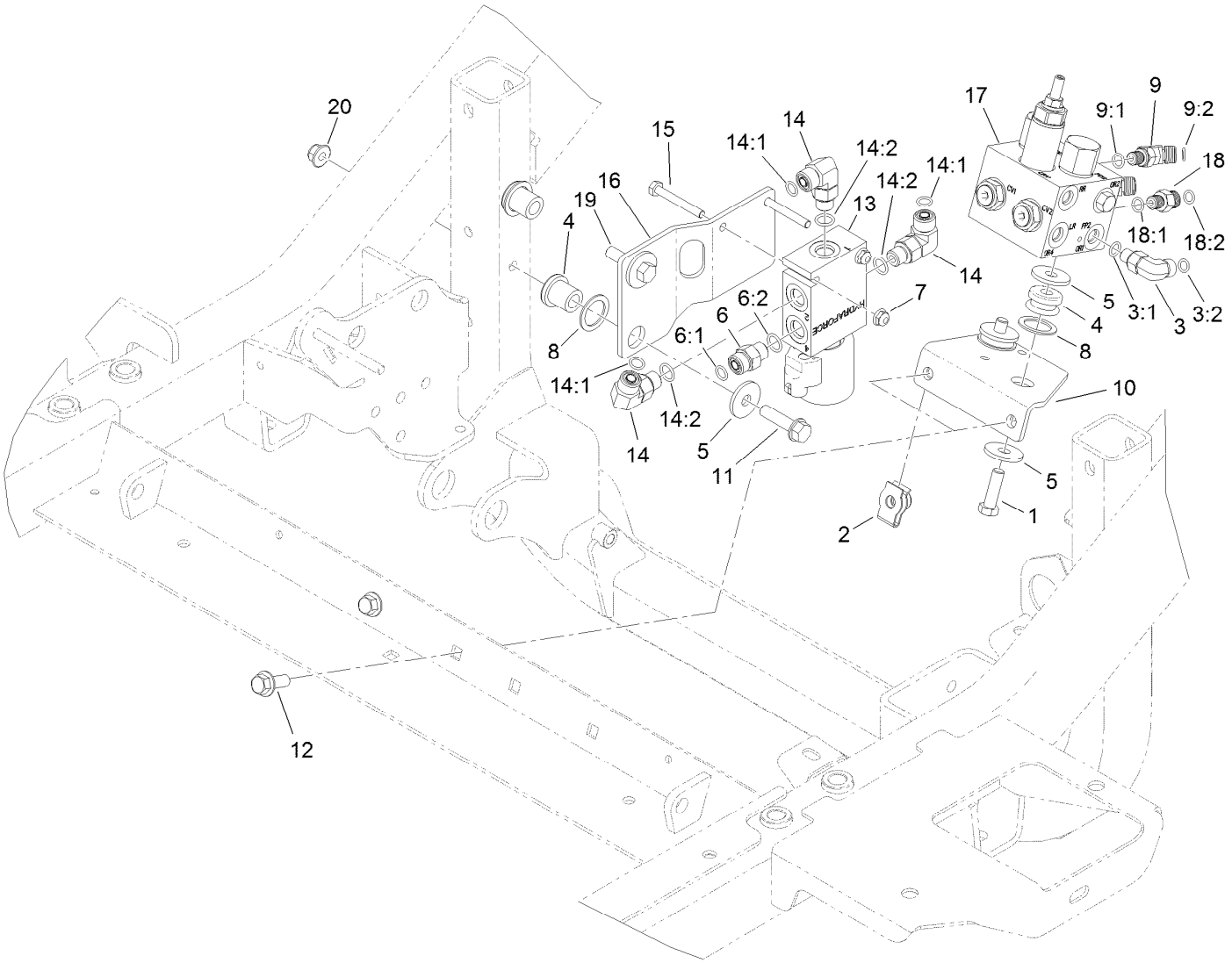

Hydraulic Valve Assembly

Ref.	Part Number	Qty.	Description
1	323-7	2	Screw-HH
2	105-4886	2	Nut-Tinnerman
3	340-132	1	Fitting-HYD, 90 DEG
3:1	237-78	1	O-Ring
3:2	237-21	1	O-Ring
4	63-9750	4	Mount
5	63-8410	6	Washer
6	340-2	1	Fitting-HYD, Straight
6:1	237-22	1	O-Ring
6:2	237-42	1	O-Ring
7	104-7201	2	Nut-Flange, NI
8	1-303352	4	Washer-Spindle
9	340-103	2	Fitting-HYD, 45 DEG
9:1	237-78	1	O-Ring
9:2	237-21	1	O-Ring
10	119-1409-03	1	Mount-Plate

Ref.	Part Number	Qty.	Description
11	323-20	1	Screw-HH
12	3234-42	2	Screw-HHF
13	115-0280	1	Steer Selector Valve ASM
14	340-77	3	Fitting-HYD, 90 DEG
14:1	237-22	1	O-Ring
14:2	237-42	1	O-Ring
15	321-11	2	Screw-HH
16	131-3352-03	1	Plate-Mount, Valve
17	117-2247	1	Cross-Trax Traction Valve ASM
18	340-92	1	Fitting-HYD, Straight
18:1	237-78	1	O-Ring
18:2	237-21	1	O-Ring
19	323-8	1	Screw-HH
20	104-8301	2	Nut-Flange, NI

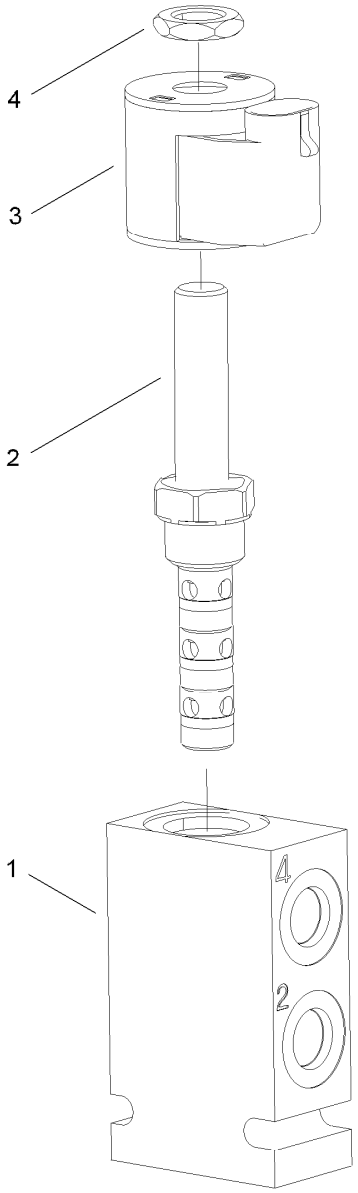

Steering Selector Valve Assembly No. 115-0280

Ref.	*Part Number*	*Qty.*	*Description*
1		1	Block-Manifold ●
2	119-8042	1	Valve-Solenoid
3	110-6344	1	Coil-12V, Dc
4	110-2634	1	Nut-Coil

● Not serviced separately

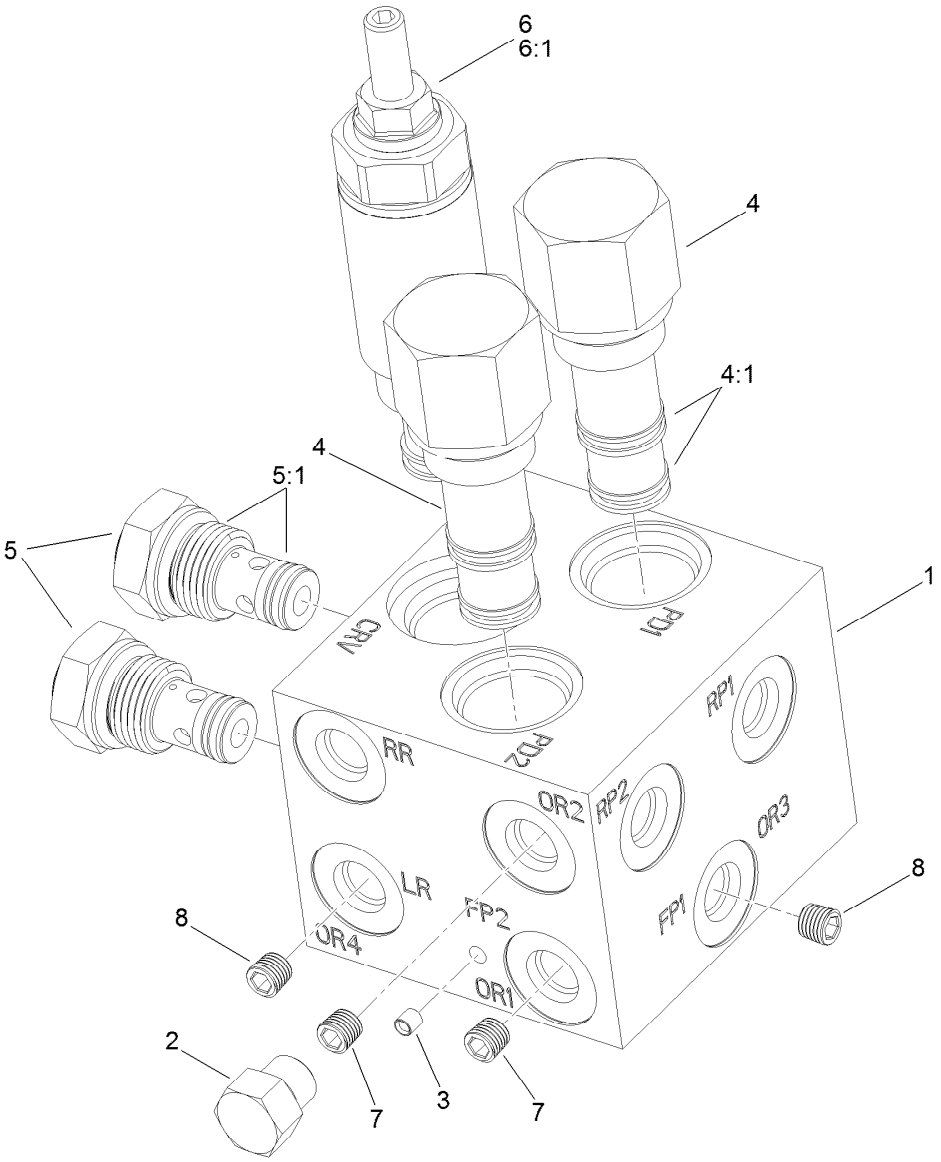

Cross-Trax Traction Valve Assembly No. 117-2247

Ref.	*Part Number*	*Qty.*	*Description*
1		1	Block-Manifold ●
2	117-0115	1	Plug-HYD
3		1	Plug-4Mm ●
4	119-8028	2	Valve-Pilot, Directional
4:1	119-8029	1	Pilot Valve Seal Kit
5	119-8030	2	Valve-Check
5:1	119-8031	1	Seal Kit-Check Valve
6	119-8032	1	Valve-Relief
6:1	119-8033	1	Relief Valve Seal Kit
7	119-8034	2	Orifice-.090
8	119-8035	2	Orifice-.040

● Not serviced separately

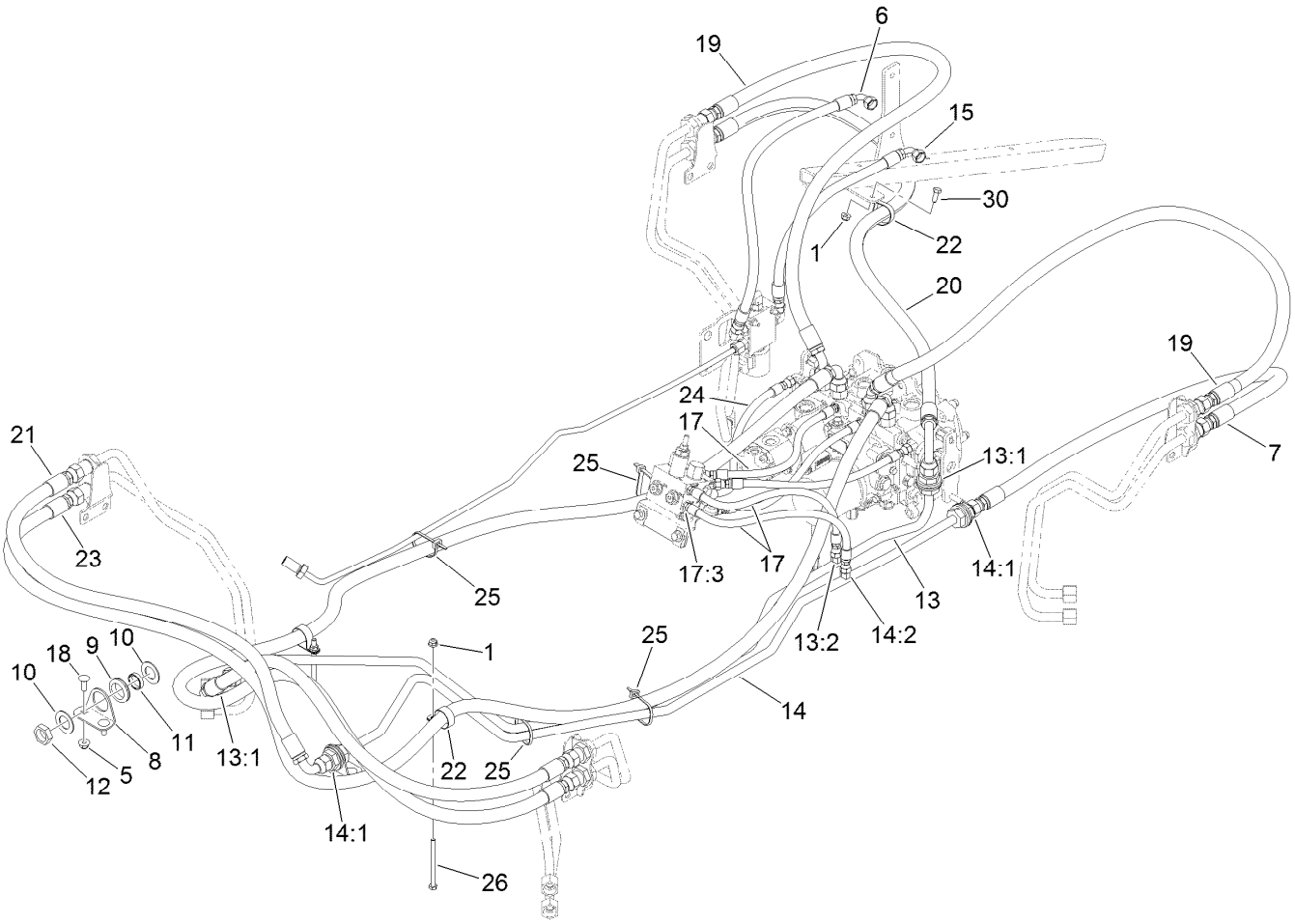

Steering and Traction Hose Assembly

Ref.	Part Number	Qty.	Description
1	104-8300	3	Nut-Flange, NI
5	104-8301	4	Nut-Flange, NI
6	131-3354	1	Hose ASM
7	119-1435	1	Hose ASM
8	115-0479	2	Bracket-Bulkhead
9	240-3	4	Grommet-Rubber
10	69-9010	8	Washer
11	125-1984	4	Spacer
12	340-74	4	Nut-Lock, Bulkhead
13	125-4357	1	Tube ASM-Front Trax, RH
13:1	237-65	2	O-Ring
13:2	237-20	1	O-Ring
14	117-3116	1	Tube ASM-Front Trax, LH
14:1	237-65	2	O-Ring

Ref.	Part Number	Qty.	Description
14:2	237-21	1	O-Ring
15	131-3353	1	Hose ASM
17	115-0377	4	Hose ASM
17:3	237-78	1	O-Ring
18	3231-22	4	Screw-CARR
19	125-4406	2	Hose ASM
20	125-4359	1	Hose ASM
21	117-3124	2	Hose ASM
22	2412-74	3	R-Clamp
23	117-3126	2	Hose ASM
24	117-3127	2	Hose ASM
25	3334-945	2	Tie-Cable
26	322-19	2	Screw-HH
30	322-3	1	Screw-HH

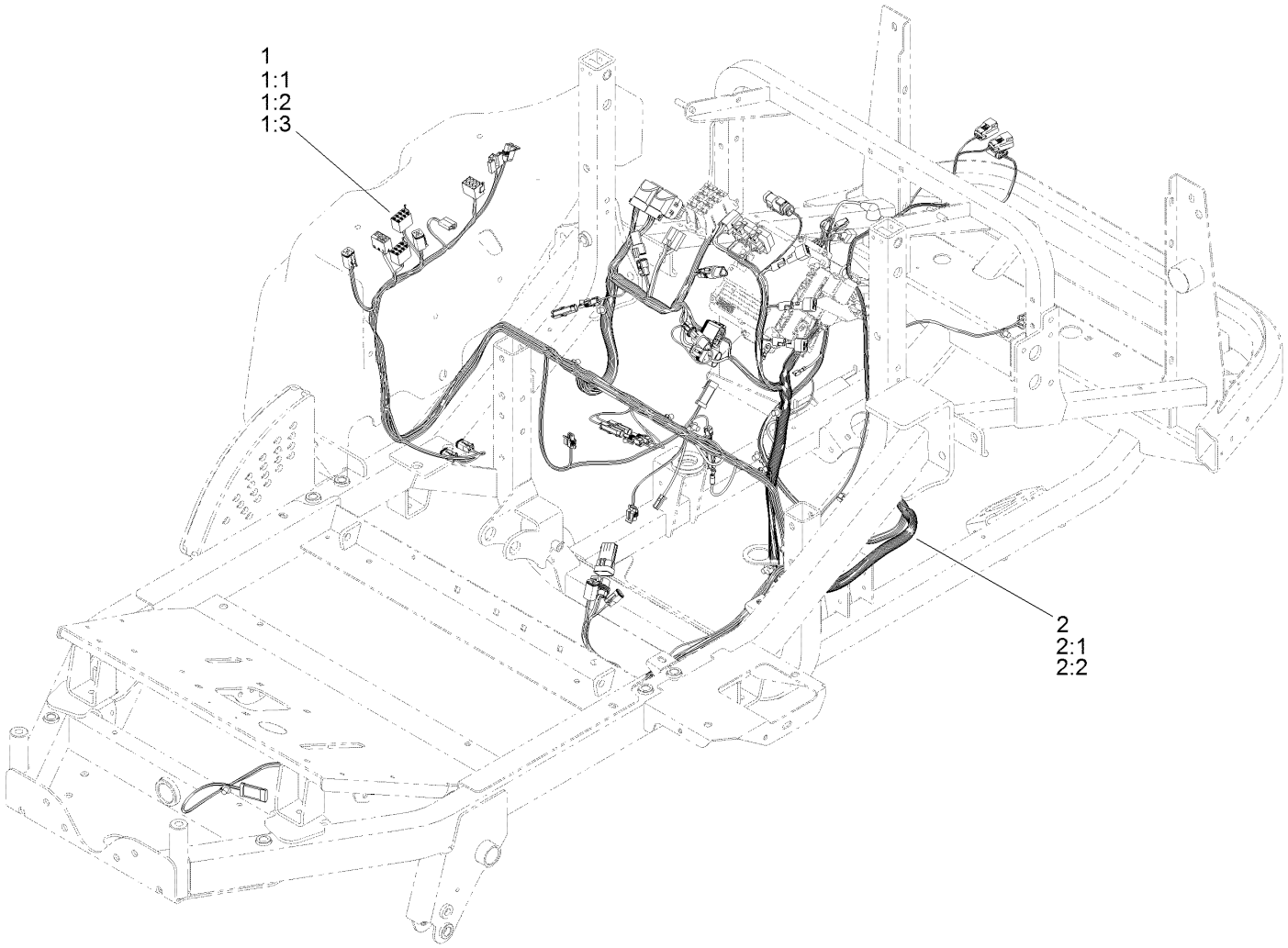

Electrical Assembly

Ref.	*Part Number*	*Qty.*	*Description*
1	119-4373	1	Harness-Platform
1:1	218-578	4	Fuse-Blade, 10 Amp
1:2	109355	1	Fuse-Blade, 15 Amp
1:3	114241	3	Fuse-Blade, 7.5 Amp
2	119-4375	1	Harness-Engine
2:1	109102	1	Fuse-Blade, 25 Amp
2:2	94-6710	1	Fuse-2 Amp

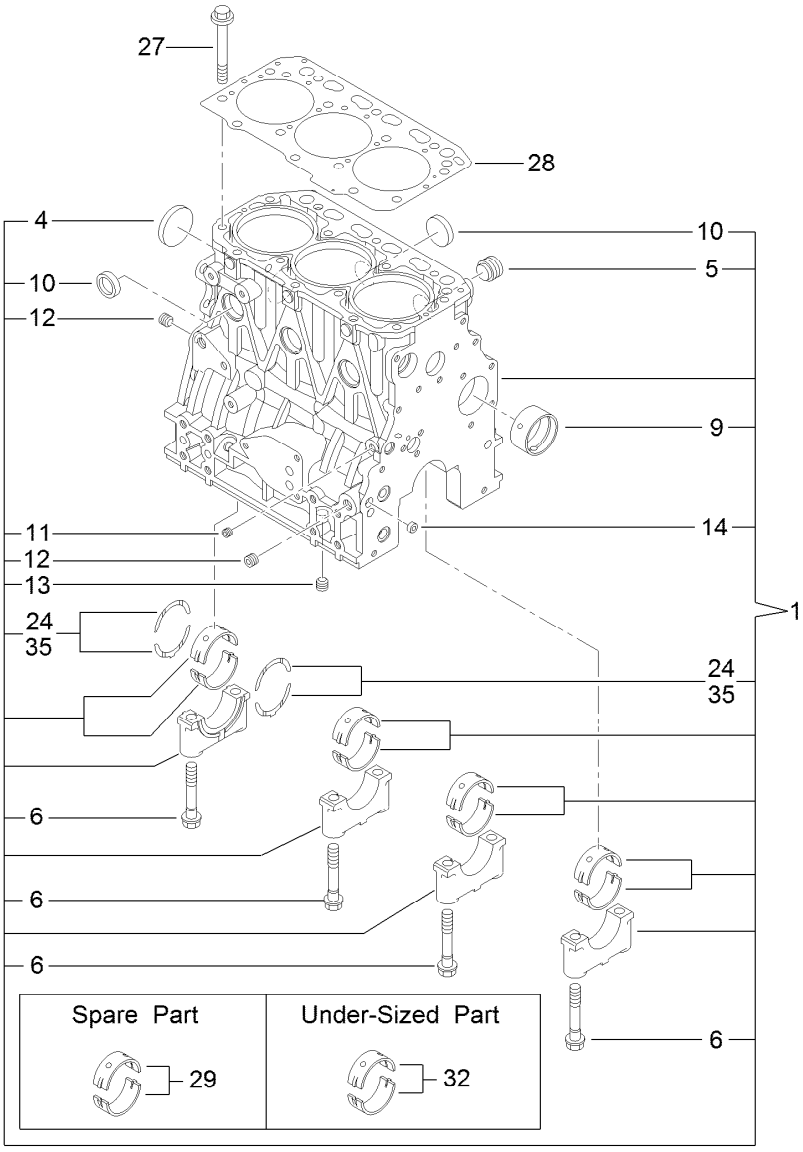

Cylinder Block Assembly

Ref.	Part Number	Qty.	Description
1	127-4717	1	Cylinder Block ASM
4	125-6980	1	Plug
5	125-7170	1	Plug
6	125-7007	8	Bolt
9	125-7108	1	Bushing
10	125-7239	6	Plug
11	125-6969	1	Plug
12	125-6973	2	Plug

Ref.	Part Number	Qty.	Description
13	125-6973	1	Plug
14	125-7237	1	Plug
24	125-7010	2	Metal-Thrust
27	125-7006	14	Bolt
28	127-4716	1	Head Gasket ASM
29	125-6981	4	Metal-Main
32	125-7009	4	Metal-Main (0.25)
35	125-7011	1	Metal-Thrust (0.25)

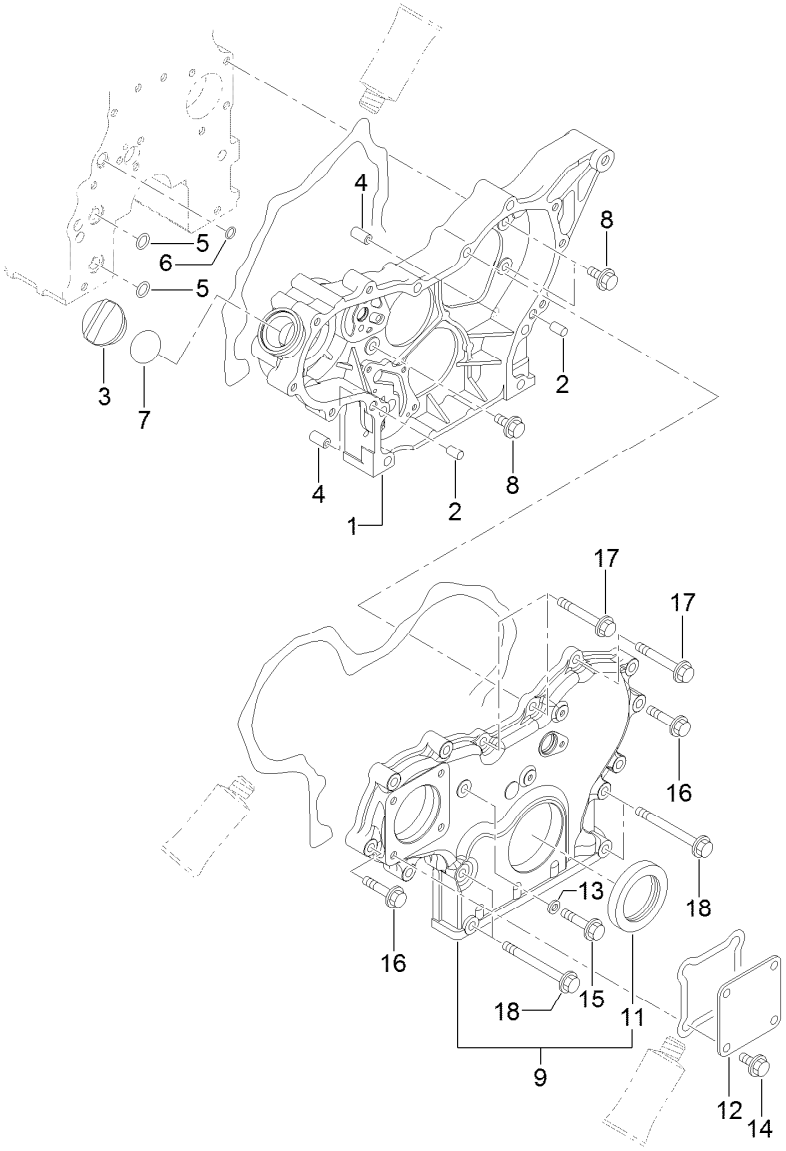

Gear Housing Assembly

Ref.	Part Number	Qty.	Description
1	127-3023	1	Case-Gear
2	125-6995	2	Pin
3	125-6972	1	Cover
4	125-7107	2	Pipe
5	125-6909	2	O-Ring
6	127-2973	1	O-Ring
7	125-7197	1	O-Ring
8	125-7214	3	Bolt
9	127-3024	1	Gearcase Cover ASM

Ref.	Part Number	Qty.	Description
11	125-6944	1	Seal-Oil
12	125-6977	1	Cover
13	125-7174	1	Washer-Seal
14	125-7214	4	Bolt
15	125-7217	1	Bolt
16	125-7218	7	Bolt
17	125-7222	3	Bolt
18	125-7224	4	Bolt

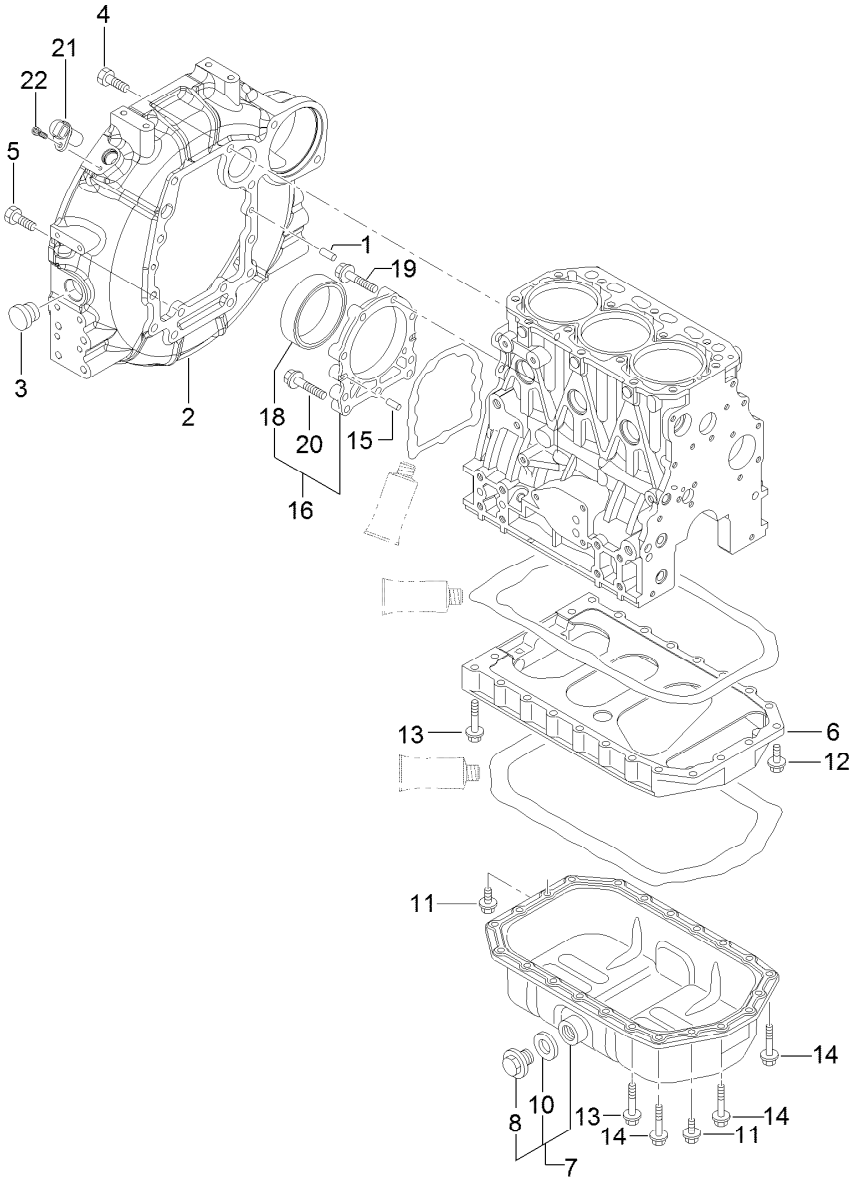

Flywheel Housing and Oil Sump Assembly

Ref.	Part Number	Qty.	Description
1	125-6995	2	Pin
2	127-4758	1	Housing-Flywheel
3	125-6910	1	Cap
4	125-7226	6	Bolt
5	125-7227	4	Bolt
6	127-3756	1	Spacer
7	131-2706	1	Oil Sump ASM
8	125-6912	1	Plug
10	125-7177	1	Washer-Seal
11	125-7214	4	Bolt

Ref.	Part Number	Qty.	Description
12	125-7215	2	Bolt
13	125-7219	16	Bolt
14	125-7220	4	Bolt
15	125-6995	2	Pin
16	125-6996	1	Case ASM
18	125-7106	1	Seal-Oil
19	125-7045	6	Bolt
20	125-7217	3	Bolt
21	127-3062	1	Sensor-Flywheel
22	127-3184	1	Bolt

Suction Manifold Assembly

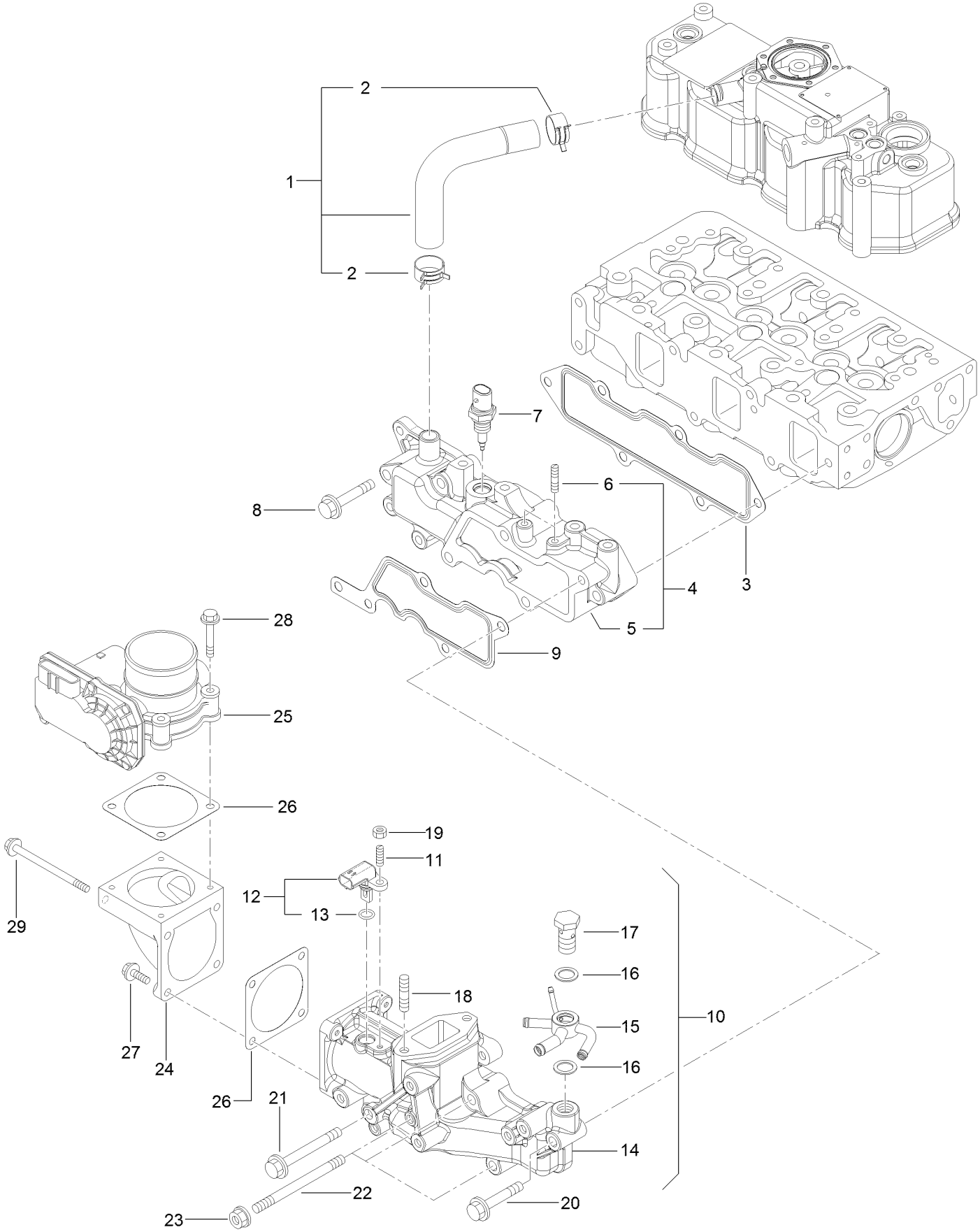

Suction Manifold Assembly (continued)

Ref.	Part Number	Qty.	Description
1	127-4704	1	Pipe
2	125-7040	2	Clip
3	127-3857	1	Gasket-Manifold, Intake
4	127-4722	1	Intake Manifold ASM
5	127-4721	2	Manifold-Intake
6	127-3180	2	Stud
7	127-3031	1	Sensor-Temp, Air
8	125-7220	1	Bolt
9	127-3034	1	Gasket-Collector
10	131-2716	1	Intake Collector ASM
11	127-4701	2	Stud
12	127-3030	2	Sensor-Temp, Air
13	127-3033	3	O-Ring
14	127-4724	2	Collector-Intake
15	131-2729	2	Joint-Hose, 4 Way
16	127-3166	2	Washer-Seal
17	131-2738	2	Bolt-Joint, 8
18	127-4774	2	Stud
19	127-4775	2	Nut
20	125-7220	1	Bolt
21	127-3178	1	Bolt
22	127-3182	1	Stud
23	125-7229	1	Nut
24	127-3035	1	Bend-Inlet
25	127-3036	1	Body-Throttle
26	127-3037	1	Gasket-Throttle
27	125-7209	1	Bolt
28	125-7211	1	Bolt
29	127-3177	1	Bolt

Exhaust Manifold Assembly

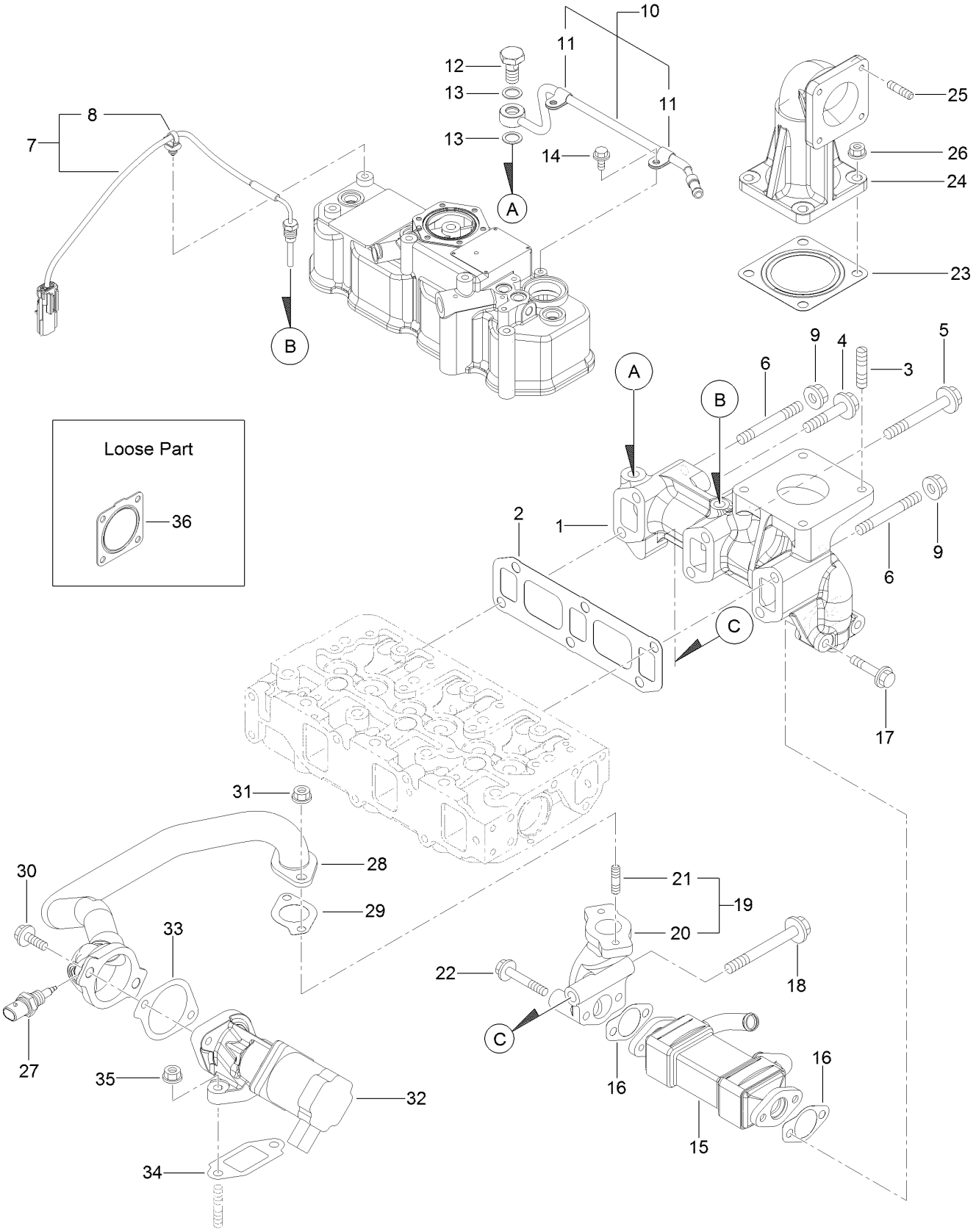

Exhaust Manifold Assembly (continued)

Ref.	Part Number	Qty.	Description
1	127-4726	1	Manifold-Exhaust
2	127-3775	1	Gasket-Manifold, Exhaust
3	127-2984	4	Stud
4	127-3094	1	Bolt
5	127-3044	3	Bolt-M10
6	127-4756	2	Stud
7	127-4729	1	Sensor-Temp, Exhaust
8	127-3087	1	Band-Clip
9	125-7230	2	Nut
10	127-3038	1	Exhaust Pipe ASM
11	127-3173	2	Clamp
12	127-3039	1	Bolt-Joint, Pipe
13	127-3174	2	Gasket
14	125-7206	2	Bolt
15	127-3042	1	Cooler-E G R
16	127-3043	2	Gasket-Cooler, E G R
17	127-2976	2	Bolt
18	127-3022	1	Bolt-Flange
19	127-3048	1	E G R Pipe ASM
20	127-3049	1	Pipe-Out, E G R
21	125-7043	2	Stud
22	125-7220	2	Bolt
23	127-2987	1	Gasket
24	131-2717	1	Pipe-Exhaust
25	125-6906	4	Stud
26	125-7230	4	Nut
27	127-3047	1	Sensor-Gas Temp, E G R
28	127-3780	1	E G R Pipe ASM
29	127-3016	1	Gasket
30	125-7215	2	Bolt
31	125-7229	2	Nut
32	127-3781	1	Valve-E G R
33	127-3050	1	Gasket-Intake Valve, E G R
34	127-3051	1	Gasket-Out Valve, E G R
35	125-7229	2	Nut
36	127-3019	1	Gasket

Cylinder Head and Cover Assembly

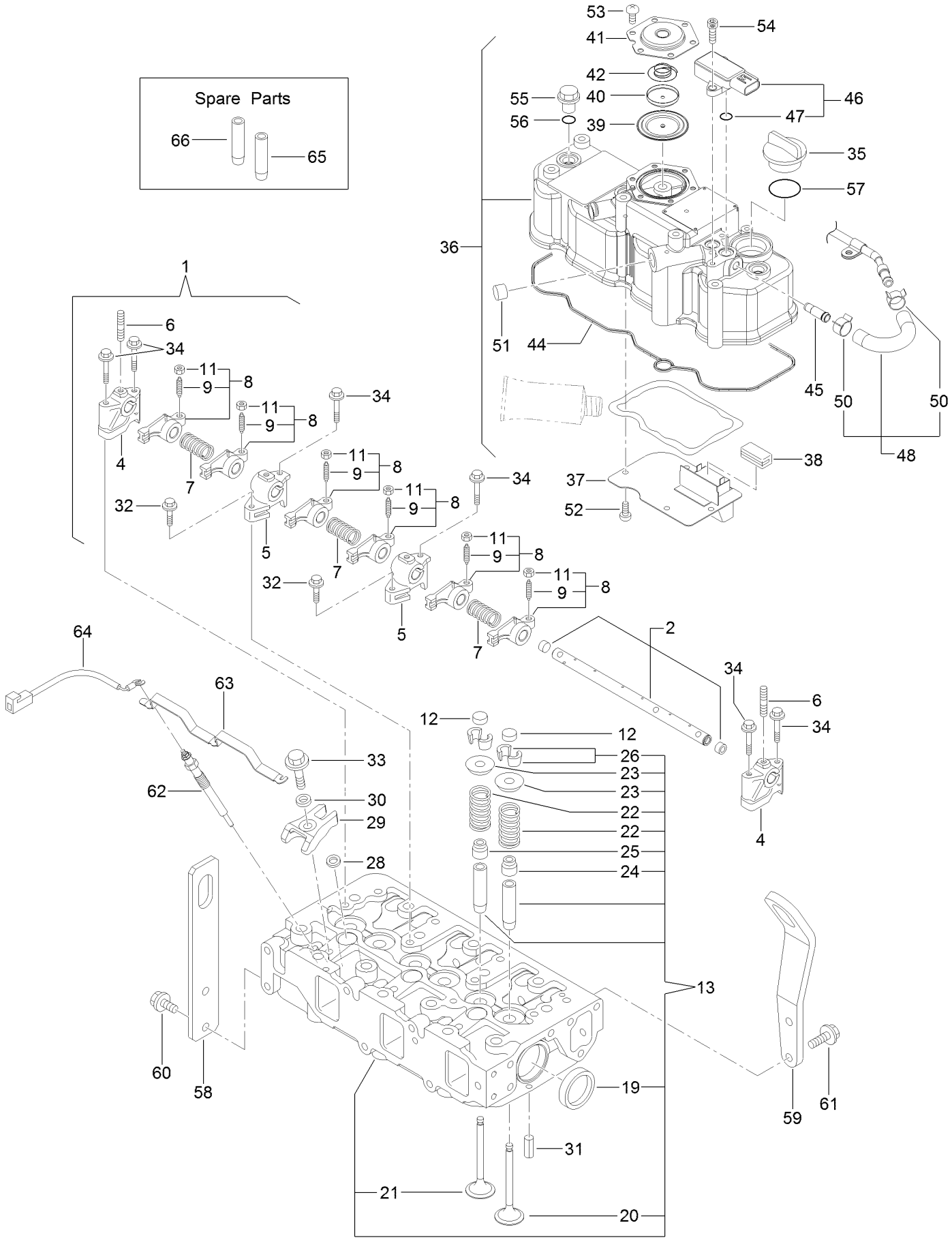

Cylinder Head and Cover Assembly (continued)

Ref.	Part Number	Qty.	Description
1	127-3757	1	Shaft ASM
2	127-3758	1	Shaft
4	127-2974	2	Support
5	127-2975	2	Support
6	127-3759	3	Stud
7	127-2995	3	Spring
8	127-2989	6	Arm-Rocker
9	125-7013	6	Screw
11	125-7014	6	Nut
12	127-2996	6	Cap
13	127-4720	1	Cylinder Head ASM
19	125-7240	2	Plug
20	127-2990	3	Valve
21	127-4710	3	Valve
22	127-3012	6	Spring
23	127-3013	6	Retainer
24	127-2986	3	Seal-Stem, Valve
25	127-3027	3	Seal-Stem, Valve
26	127-3186	6	Pin-Cotter
28	127-3021	3	Gasket-Injector
29	127-3028	3	Retainer-Injector
30	127-2980	3	Washer
31	125-7184	2	Pin-Spring
32	125-7215	2	Bolt
33	125-7217	3	Bolt
34	125-7220	6	Bolt
35	125-6972	1	Cover
36	127-4719	1	Cylinder Head Cover ASM

Ref.	Part Number	Qty.	Description
37	127-2988	1	Plate
38	125-7012	1	Baffle
39	125-6959	1	Diaphragm
40	125-6960	1	Plate
41	125-6961	1	Plate
42	125-6962	1	Spring
44	127-3856	1	Gasket-Head, Cylinder
45	127-3026	1	Joint
46	127-3029	1	Sensor-Pressure
47	127-3032	2	O-Ring
48	127-3040	1	Hose ASM
50	127-3041	2	Clip-Hose
51	125-6913	1	Plug
52	125-7186	4	Screw
53	125-7186	6	Screw
54	127-3184	2	Bolt
55	125-6974	3	Knob
56	93-0418	3	O-Ring
57	125-7197	1	O-Ring
58	131-2707	1	Lifter
59	131-2715	1	Lifter-Engine
60	125-7214	2	Bolt
61	127-7595	2	Decal-Oil Level
62	127-2991	3	Plug
63	127-3768	1	Connector-Plug, Glow
64	131-2704	1	Harness, Wire
65	127-2979	3	Guide
66	127-2997	3	Guide

Diesel Particulate Filter Assembly

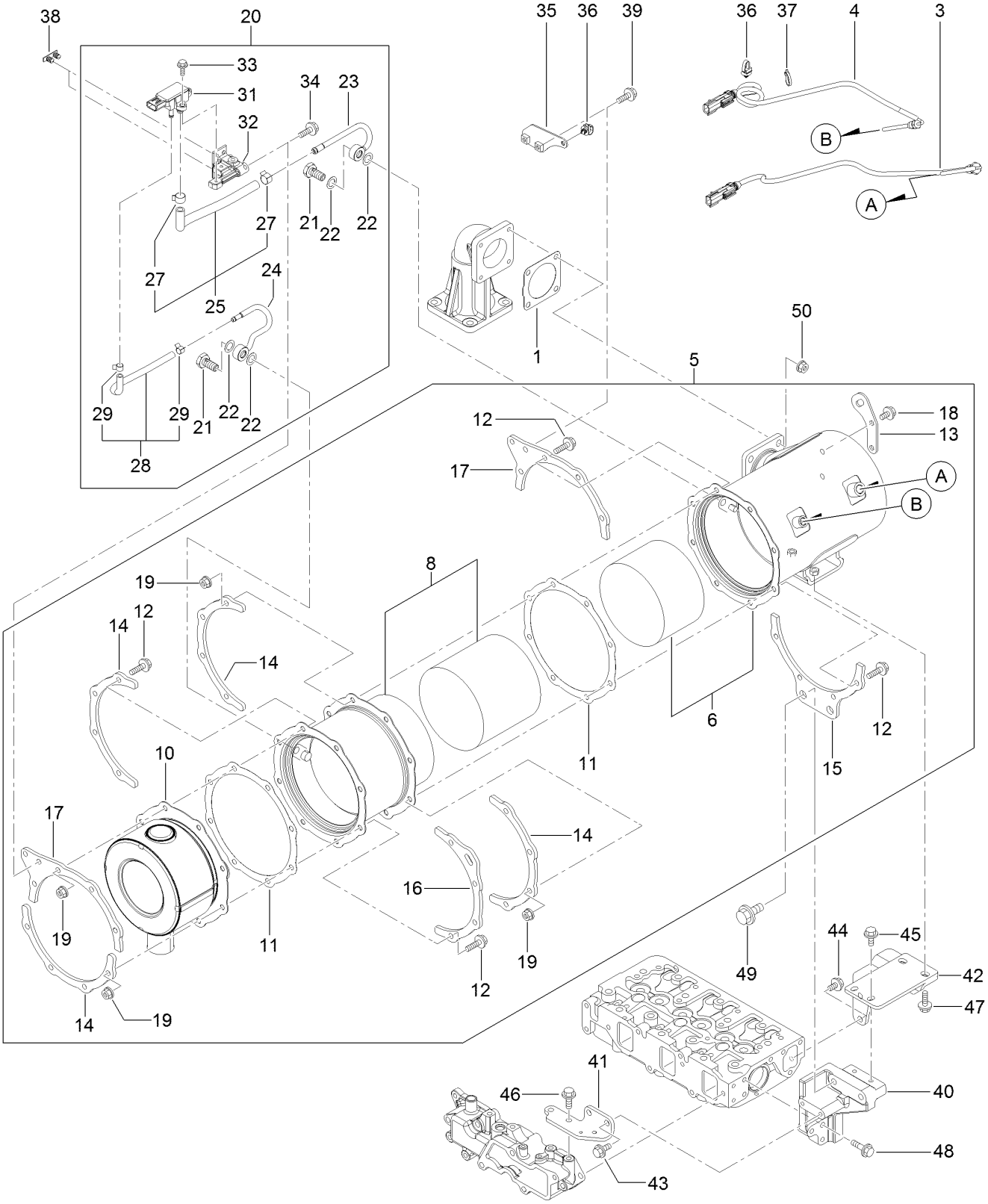

Diesel Particulate Filter Assembly (continued)

Ref.	Part Number	Qty.	Description
1	127-3019	1	Gasket
3	131-2718	1	Sensor-Temp, Exhaust
4	131-2719	1	Sensor-Temp, Exhaust
5	131-2730	1	D P F ASM
6	131-2720	1	Case-Doc
8	127-4734	1	Case-Filter, Soot
10	127-3786	1	Silencer-D P F
11	127-3859	2	Gasket-D P F
12	127-3055	16	Bolt
13	127-3788	1	Lifter-D P F
14	127-3789	4	Stiffener-D P F, A
15	131-2721	1	Stiffener-D P F, B
16	127-3792	1	Stiffener-D P F, C
17	127-4736	2	Stiffener-D P F, C
18	125-7213	2	Bolt
19	125-7229	16	Nut
20	131-2722	1	Pressure Sensor Unit
21	127-3039	2	Bolt-Joint, Pipe
22	127-3056	4	Gasket-Sensor
23	127-4744	1	Sensor Pipe ASM
24	127-4745	1	Sensor Pipe ASM
25	127-3114	1	Exhaust Hose ASM
27	127-3057	2	Clip-Hose
28	131-2726	1	Exhaust Press Hose ASM
29	127-3058	2	Clip-Hose
31	127-3060	1	Sensor-Pressure
32	127-4750	1	Bracket-Sensor
33	125-7208	2	Bolt
34	125-7595	2	Bolt
35	131-2727	1	Bracket-Harness
36	127-3087	2	Band-Clip
37	127-3124	1	Band
38	127-3088	2	Clip-Connnector
39	125-7595	2	Bolt
40	131-2723	1	Stay-D P F, A
41	131-2724	1	Support-Stay, D P F
42	131-2725	1	Stay-D P F, B
43	125-7214	2	Bolt
44	125-7214	2	Bolt
45	125-7214	2	Bolt
46	125-7595	2	Bolt
47	125-7215	2	Bolt
48	125-7216	3	Bolt
49	131-2741	2	Bolt-Plated, M12X 20
50	125-7229	4	Nut

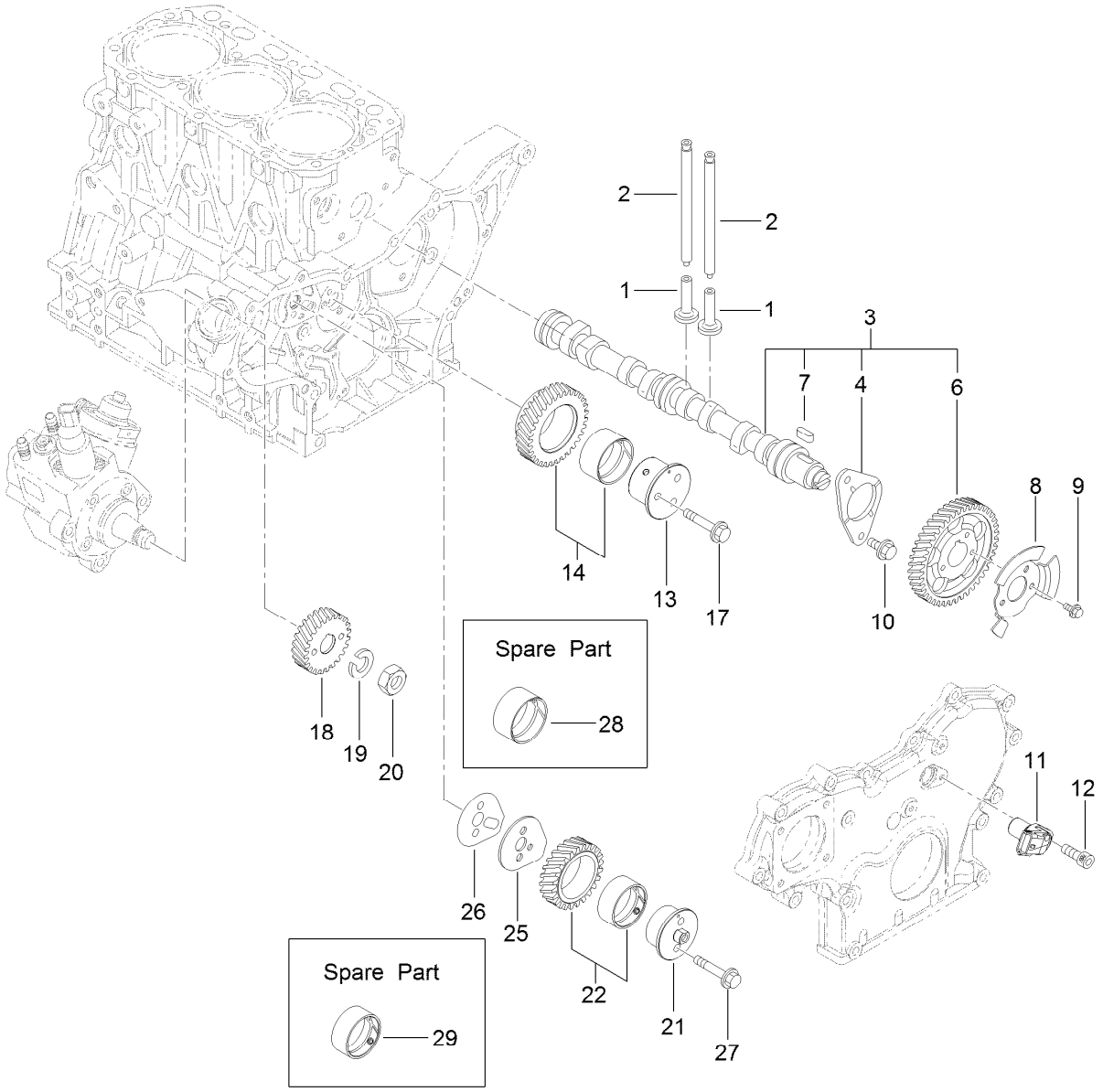

Camshaft and Driving Gear Assembly

Ref.	Part Number	Qty.	Description
1	125-7016	6	Tappet
2	125-7017	6	Rod-Push
3	127-3797	1	Camshaft ASM
4	125-7008	1	Metal-Thrust
6	127-3052	1	Gear-Camshaft
7	125-7185	1	Key
8	127-3053	1	Pulser-Camshaft
9	125-7205	3	Bolt
10	125-7213	2	Bolt
11	127-3054	1	Sensor-Rev, Gear
12	127-3184	1	Bolt
13	127-3063	1	Shaft-Idle, Gear A

Ref.	Part Number	Qty.	Description
14	127-3066	1	Idle Gear A ASM
17	125-7219	3	Bolt
18	127-3070	1	Gear-Pump, Supply
19	127-3167	1	Washer-Spring
20	127-3185	1	Nut
21	127-3064	1	Shaft-Idle, Gear B
22	127-3067	1	Idle Gear B ASM
25	127-3068	1	Plate-Idle, Shaft
26	127-3069	1	Gasket-Idle, Shaft B
27	125-7218	2	Bolt
28	125-6927	1	Bushing
29	127-3065	1	Bushing

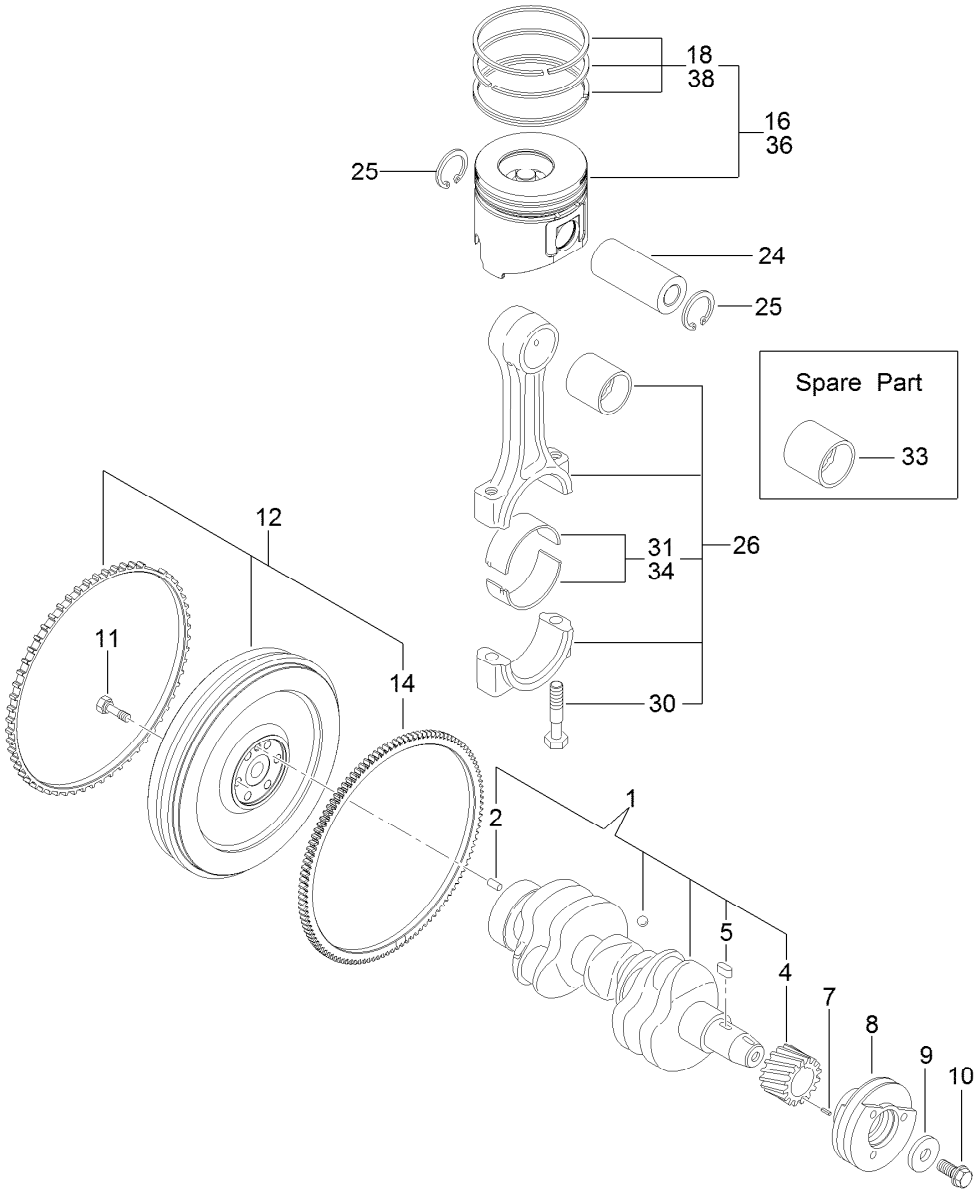

Crankshaft and Piston Assembly

Ref.	Part Number	Qty.	Description
1	127-3800	1	Crankshaft ASM
2	125-6995	1	Pin
4	125-6937	1	Gear
5	125-7185	1	Key
7	125-7182	1	Pin-Spring
8	127-3801	1	Pulley-V
9	125-7109	1	Washer
10	125-6956	1	Bolt
11	125-6951	6	Bolt
12	127-4761	1	Flywheel ASM
14	127-4703	1	Gear

Ref.	Part Number	Qty.	Description
16	127-4766	3	Piston ASM
18	127-4751	3	Piston Ring ASM
24	125-7030	3	Pin
25	125-7180	6	Ring
26	125-7242	3	Connecting Rod ASM
30	125-6955	6	Bolt
31	125-7018	3	Pin-Crank
33	125-6997	3	Pin-Piston
34	125-7019	3	Pin-Crank (.25)
36	127-4767	3	Piston ASM (0.25 O S)
38	127-4752	3	Ring Set (0.25 O S)

Cooling Water System Assembly

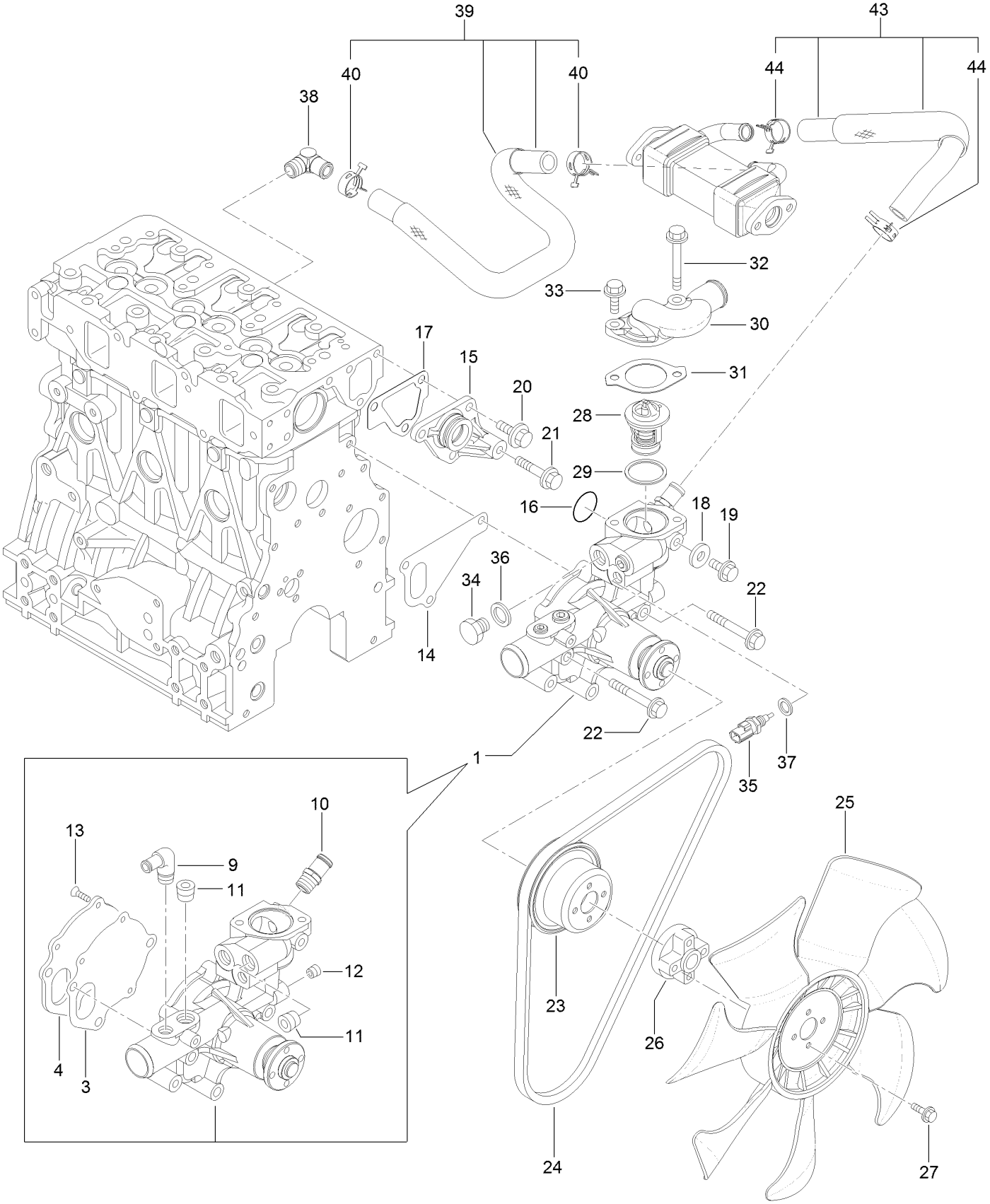

Cooling Water System Assembly (continued)

Ref.	Part Number	Qty.	Description
1	131-2714	1	Water Pump ASM
3	125-6998	1	Gasket
4	125-6999	1	Plate
9	125-7001	1	Elbow
10	127-3017	1	Joint
11	125-7123	2	Plug
12	125-7195	1	Plug
13	125-7234	3	Screw
14	125-7047	1	Gasket
15	125-6986	1	Joint
16	125-7048	1	O-Ring
17	125-6978	1	Gasket
18	125-7192	1	Gasket
19	125-7212	1	Bolt
20	125-7214	3	Bolt
21	125-7219	1	Bolt
22	125-7222	3	Bolt
23	127-4712	1	V-Pulley
24	127-4771	1	V-Belt
25	127-4702	1	Fan
26	131-2705	1	Spacer
27	131-2739	4	Bolt-Plated, M6X 30
28	125-7029	1	Thermostat
29	125-7026	1	Gasket
30	131-2728	1	Cover-Thermostat
31	125-7110	1	Gasket
32	125-7594	1	Bolt
33	125-7220	1	Bolt
34	125-6953	1	Plug
35	125-7124	1	Sensor
36	125-6979	1	Gasket
37	125-7176	1	Washer-Seal
38	127-4705	1	Elbow
39	127-4757	1	E G R-C Pipe ASM
40	127-3020	2	Clamp-Hose
43	127-3811	1	CW Pipe ASM
44	127-3020	2	Clamp-Hose

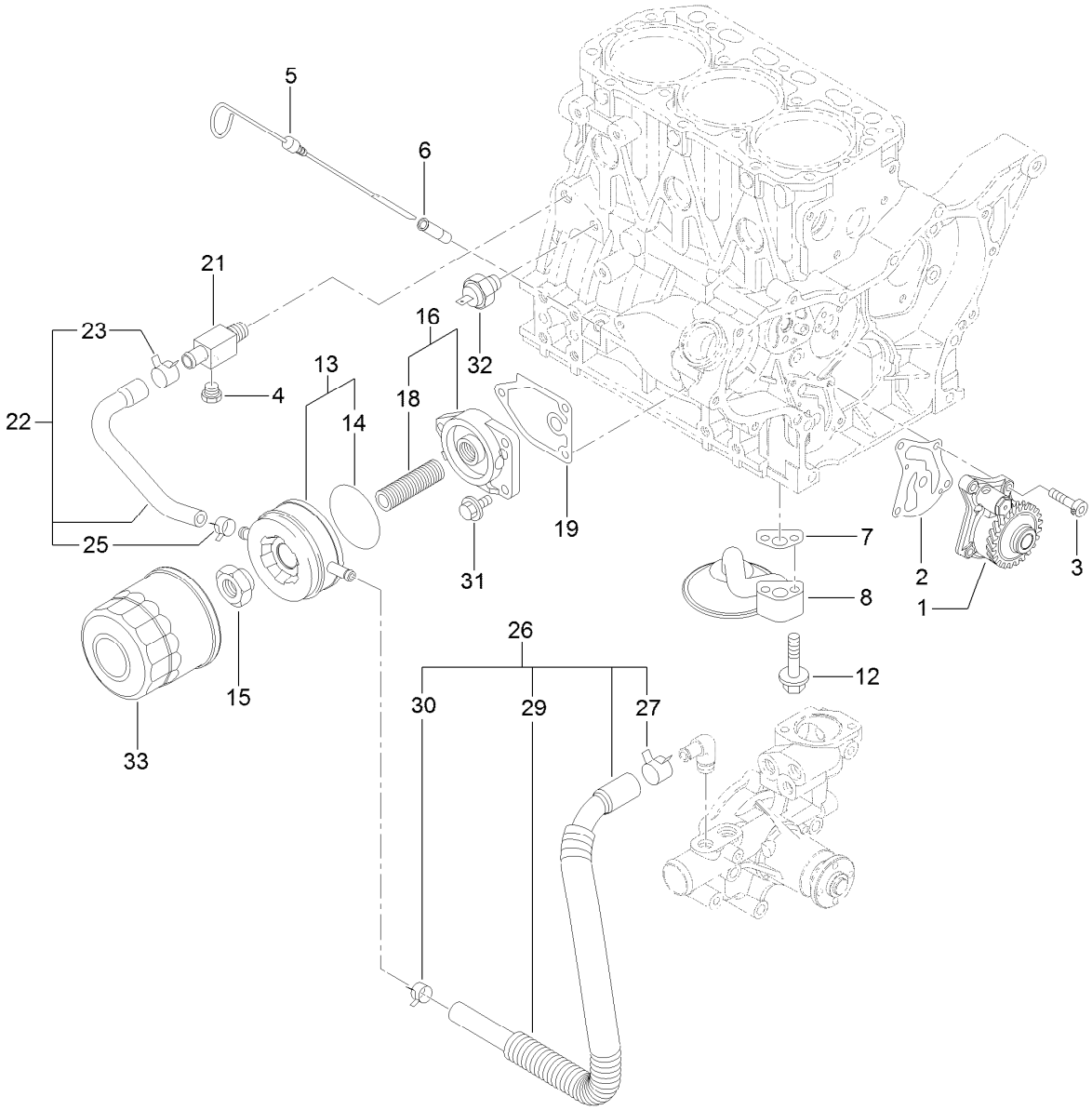

Lubrication and Oil System Assembly

Ref.	Part Number	Qty.	Description
1	127-4753	1	Oil Pump ASM
2	127-3004	1	Gasket
3	125-7232	4	Bolt
4	125-7171	1	Plug
5	125-6987	1	Dipstick
6	125-6954	1	Guide
7	125-7022	1	Gasket
8	125-7023	1	Pipe ASM
12	125-7217	2	Bolt
13	125-7074	1	Cooler ASM
14	125-7075	1	O-Ring
15	125-7041	1	Nut-Cooler, Oil
16	125-6989	1	Bracket ASM

Ref.	Part Number	Qty.	Description
18	125-7042	1	Stud
19	125-7024	1	Gasket
21	125-6990	1	Joint
22	125-7078	1	Pipe ASM
23	125-7162	1	Clip
25	125-7191	1	Clamp-Hose
26	127-3804	1	Pipe ASM
27	125-7162	1	Clip
29	127-3805	1	Tube
30	125-7191	1	Clamp-Hose
31	125-7595	3	Bolt
32	125-6918	1	Switch-Oil
33	125-7025	1	Filter

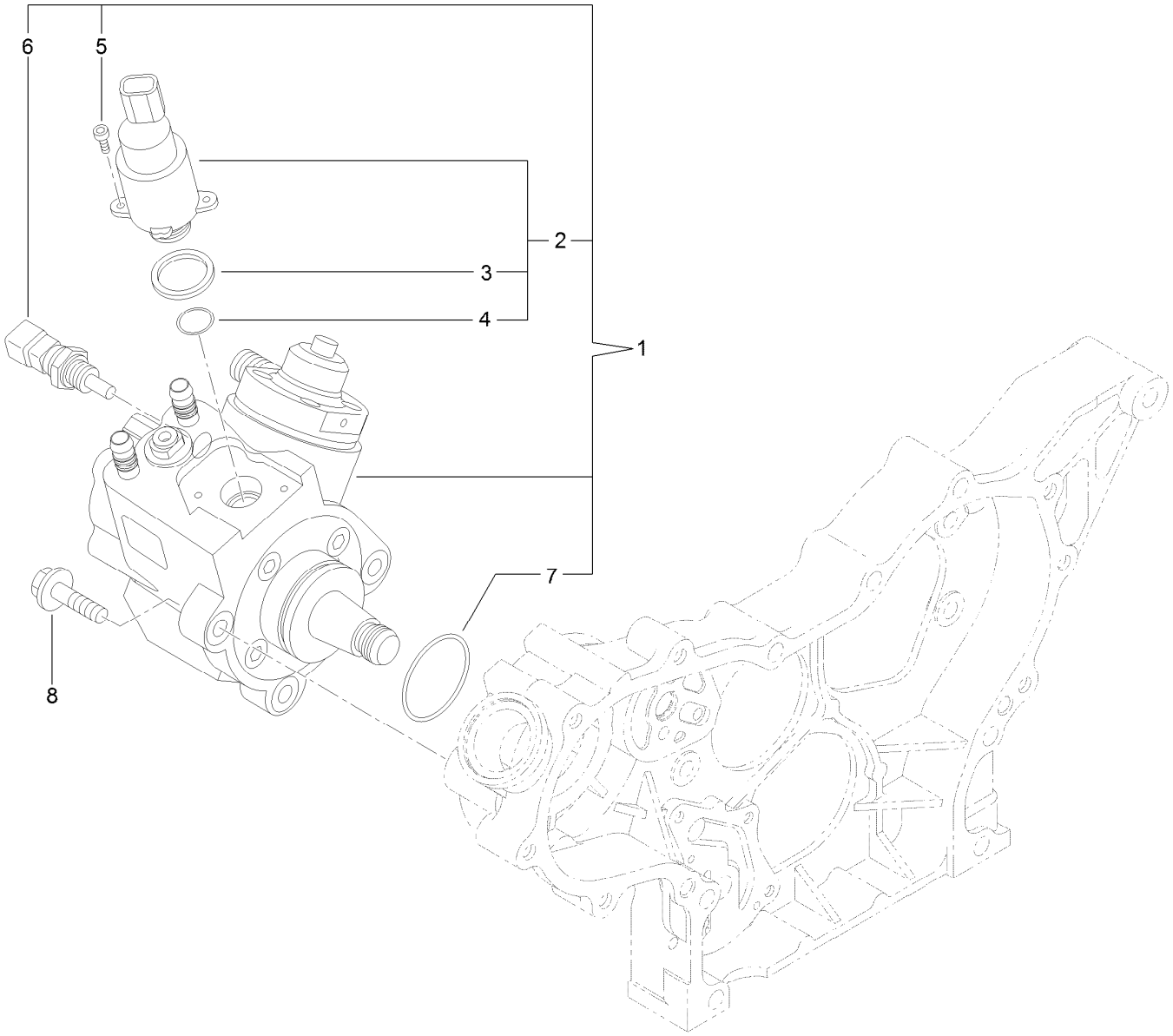

Fuel System Assembly

Ref.	Part Number	Qty.	Description
1	127-3073	1	Fuel Pump ASM
2	131-2103	1	Valve ASM
3	131-2105	1	Ring-Sealing
4	131-2106	1	O-Ring
5	131-2107	2	Bolt
6	131-2108	1	Sensor-Temperature
7	127-3074	1	O Ring-Pump, Fuel
8	125-7216	3	Bolt

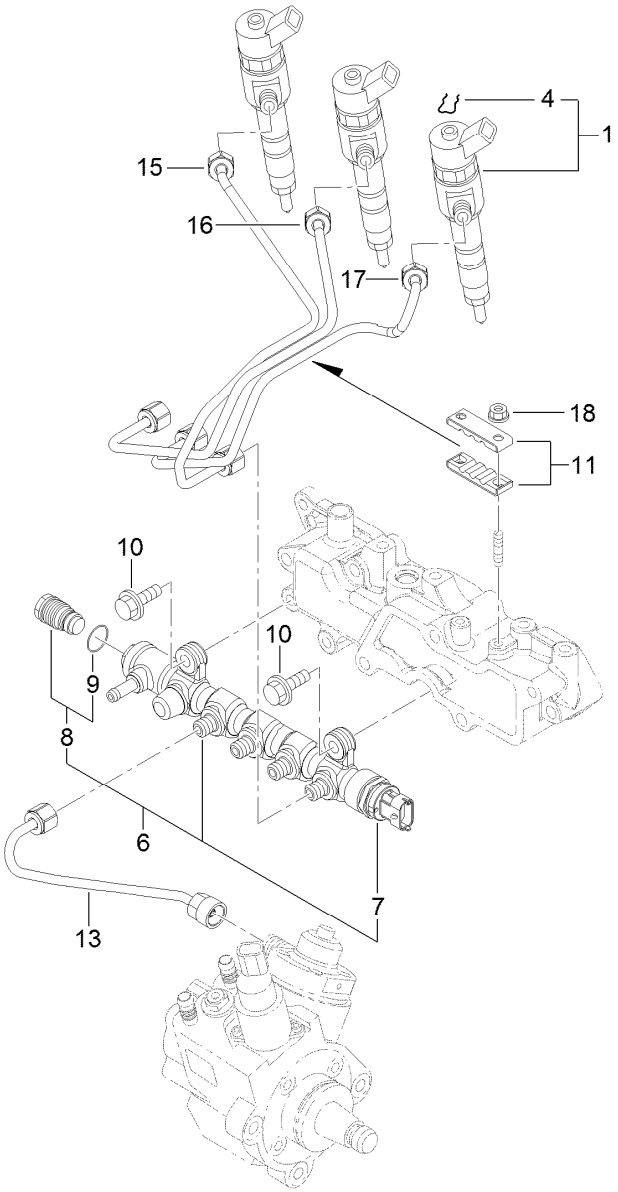

Fuel Injection Valve Assembly

Ref.	Part Number	Qty.	Description
1	127-4754	3	Injector ASM
4	131-2708	3	Ring, Retaining
6	127-3812	1	Rail ASM
7	131-2709	1	Sensor-Pressure, Rail
8	131-2710	1	Valve ASM
9	131-2711	1	O-Ring
10	125-7215	2	Bolt
11	127-3813	2	Retainer
13	127-3082	1	Rail In Pipe ASM
15	127-3814	1	Injection Pipe ASM
16	127-3083	1	Injection Pipe ASM
17	127-3084	1	Injection Pipe ASM
18	125-7231	2	Nut

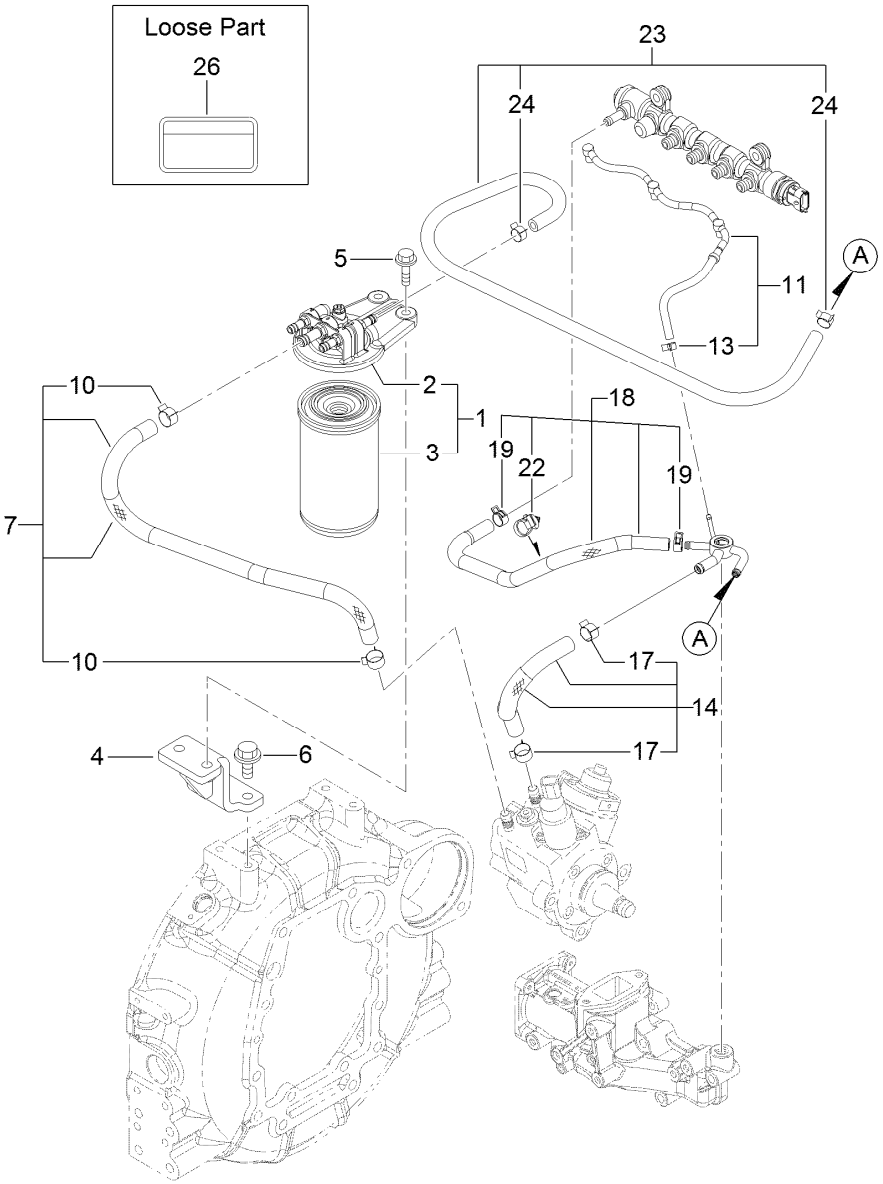

Fuel Pipe Assembly

Ref.	Part Number	Qty.	Description
1	127-3075	1	Filter ASM
2	127-3076	1	Bracket ASM
3	125-8752	1	Filter-Fuel
4	131-2731	1	Bracket-Filter, Fuel
5	125-7216	2	Bolt
6	131-2740	1	Bolt-Plated, M10X 22
7	131-2732	1	Fuel Pipe ASM
10	125-7191	2	Clamp-Hose
11	127-3816	1	Fuel/Oil Return Pipe ASM

Ref.	Part Number	Qty.	Description
13	127-3172	1	Clamp-Hose
14	127-3078	1	Fuel Pipe ASM
17	125-7191	2	Clamp-Hose
18	127-3817	1	Fuel Pipe ASM
19	127-2950	2	Clip
22	127-3087	1	Band-Clip
23	131-2733	1	Fuel Pipe ASM
24	127-2950	2	Clip
26	125-6900	1	Label-Caution, Fuel Oil

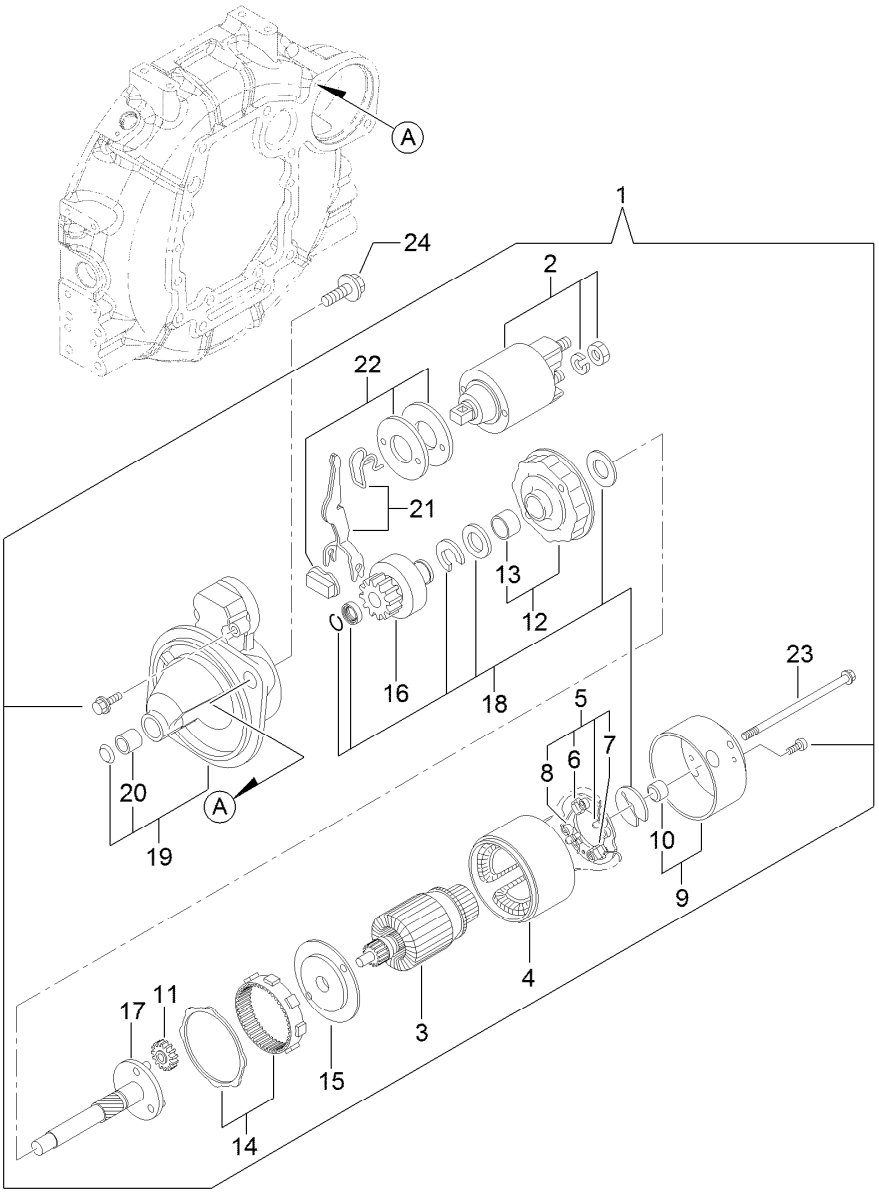

Starting Motor Assembly

Ref.	Part Number	Qty.	Description
1	127-3818	1	Starter ASM
2	127-3819	1	Switch ASM
3	127-3820	1	Armature ASM
4	127-3821	1	Yoke ASM
5	127-3822	1	Brush Holder ASM
6	127-3823	2	Brush
7	127-3824	1	Brush Set
8	127-3825	4	Spring
9	127-3826	1	Cover ASM
10	127-3827	1	Metal
11	127-3828	3	Gear
12	127-3829	1	Bracket
13	127-3830	1	Bracket
14	127-3831	1	Gear
15	127-3832	1	Bracket
16	127-3833	1	Pinion ASM
17	127-3834	1	Shaft
18	127-3835	1	Washer Set
19	127-3836	1	Case ASM
20	127-3837	1	Metal-Starter
21	127-3838	1	Lever Set
22	127-3839	1	Dust Cover ASM
23	127-3840	2	Bolt-Through
24	125-7225	2	Bolt

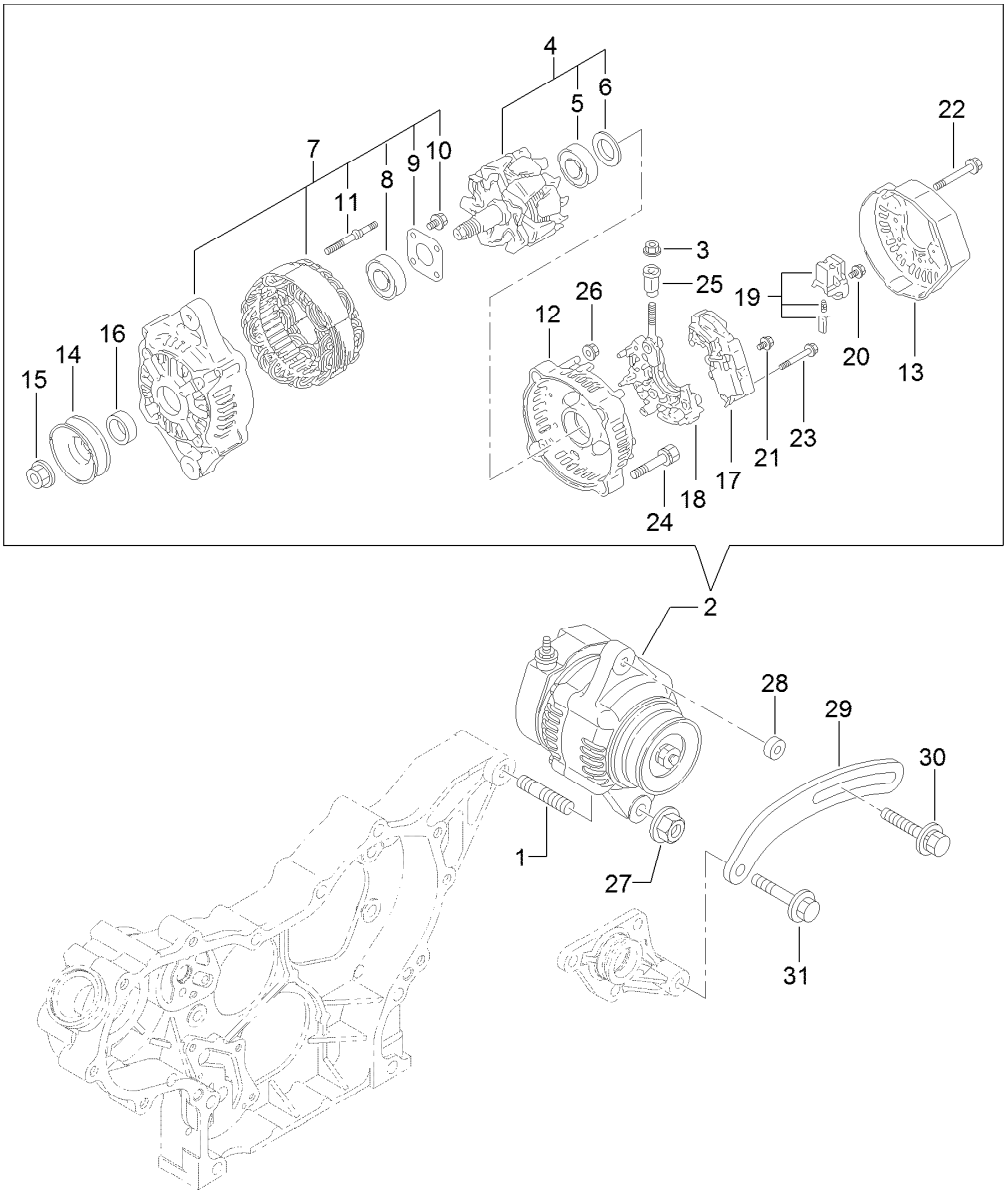

Generator Assembly

Ref.	Part Number	Qty.	Description
1	127-3011	1	Stud
2	127-3841	1	Generator
3	127-3190	1	Nut
4	127-3843	1	Rotor ASM
5	127-2983	1	Bearing-Ball
6	127-2962	1	Cover
7	127-3844	1	Frame ASM
8	127-2958	1	Bearing-Ball
9	127-2959	1	Plate-Retainer
10	127-2960	4	Screw
11	127-2961	2	Stud
12	127-3845	1	Frame
13	127-3846	1	Cover
14	127-2954	1	Pulley
15	127-2955	1	Nut
16	127-2957	1	Collar

Ref.	Part Number	Qty.	Description
17	127-3847	1	Regulator ASM
18	127-3848	1	Holder
19	127-2993	1	Holder
20	127-2965	6	Screw
21	127-2966	1	Screw
22	127-2967	3	Bolt
23	127-2968	2	Screw
24	127-2969	2	Bolt
25	127-2970	1	Bushing-Insulation
26	127-2971	2	Nut
27	125-7230	1	Nut
28	125-6947	1	Spacer
29	127-2977	1	Adjuster
30	125-7134	1	Bolt
31	125-7219	1	Bolt

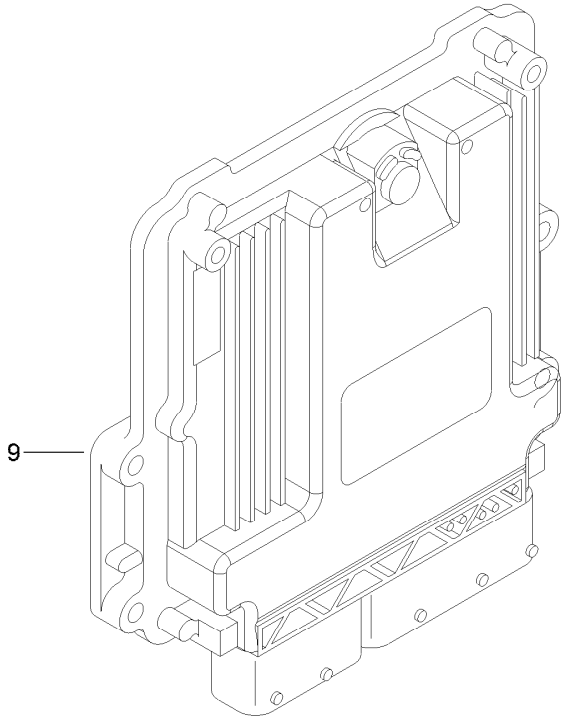

Electronic Control Unit Assembly

Ref.	*Part Number*	*Qty.*	*Description*
9	127-3085	1	E C U ASM

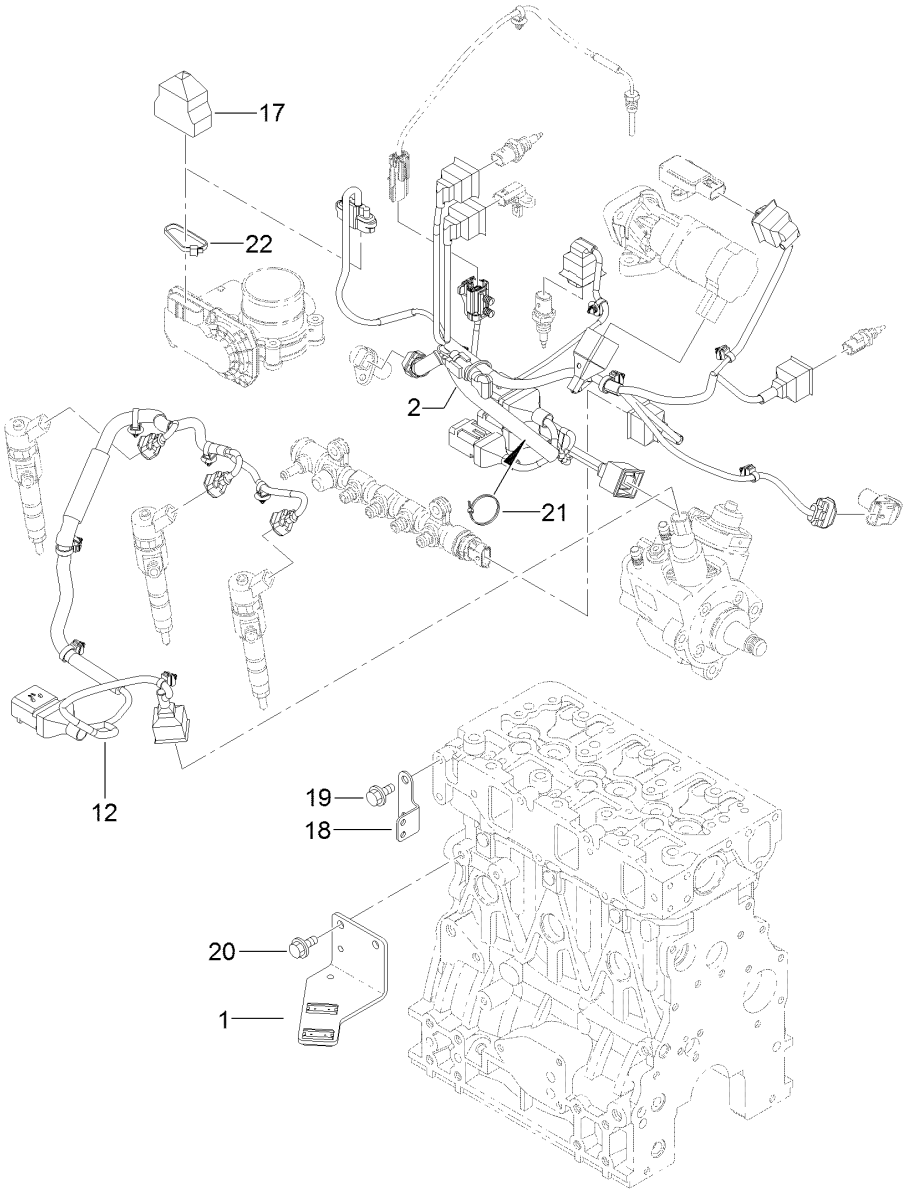

Electric Parts Assembly

Ref.	*Part Number*	*Qty.*	*Description*
1	131-2735	1	Bracket-Connector
2	131-2736	1	Harness-B, T4
12	131-2712	1	Harness
17	131-2713	1	Boot-Cap Type
18	127-3090	1	Bracket-Harness
19	125-7212	2	Bolt
20	125-7213	2	Bolt
21	127-3187	1	Band
22	127-3188	1	Band

Gasket Set

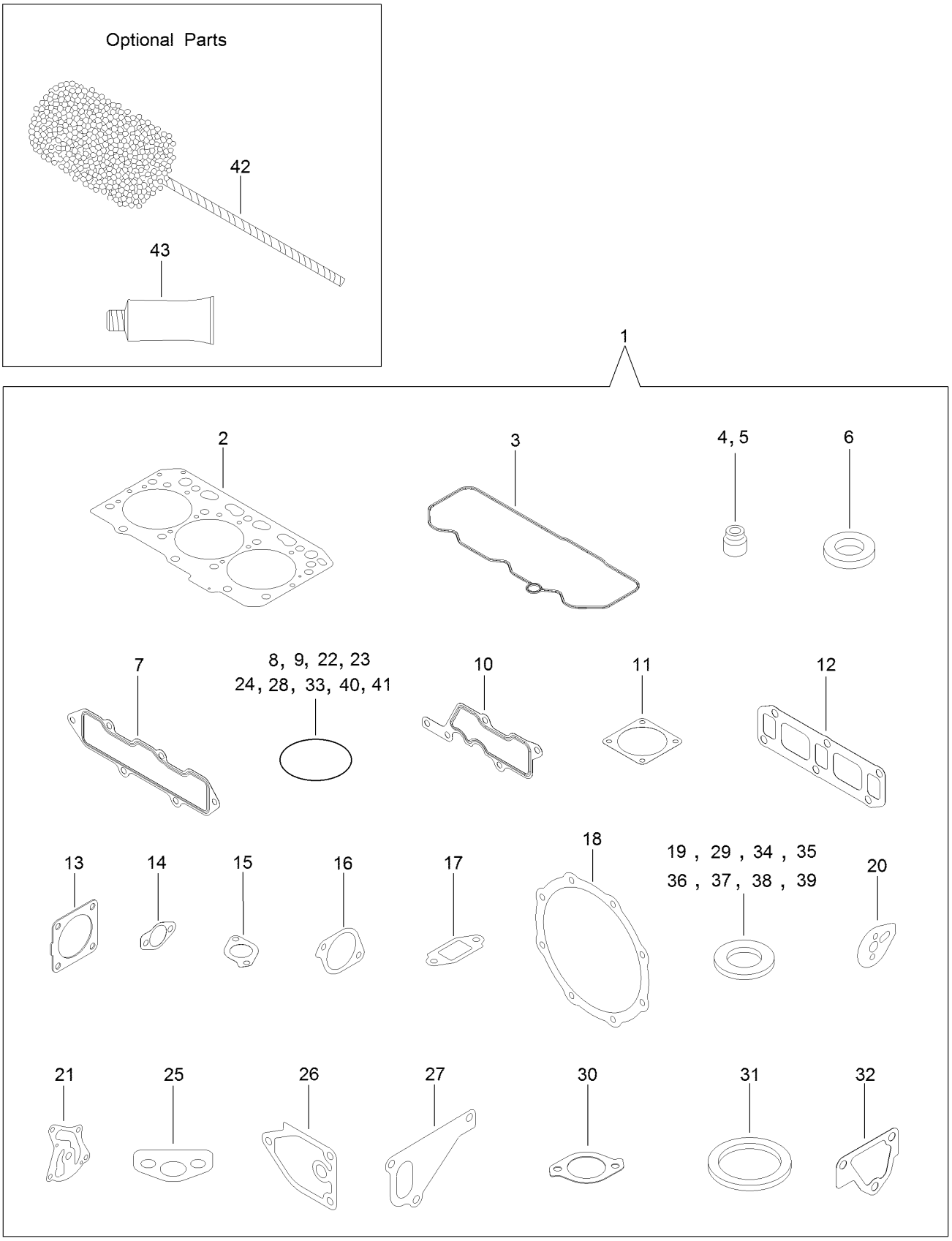
Optional Parts
42
43
1
2
3
4, 5
6
7
8, 9, 22, 23
24, 28, 33, 40, 41
10
11
12
13
14
15
16
17
18
19 , 29 , 34 , 35
36 , 37 , 38 , 39
20
21
25
26
27
30
31
32

Gasket Set (continued)

Ref.	Part Number	Qty.	Description
1	131-2737	1	Packing
2	127-4716	1	Head Gasket ASM
3	127-3856	1	Gasket-Head, Cylinder
4	127-2986	3	Seal-Stem, Valve
5	127-3027	3	Seal-Stem, Valve
6	127-3021	3	Gasket-Injector
7	127-3857	1	Gasket-Manifold, Intake
8	127-3032	2	O-Ring
9	127-3033	1	O-Ring
10	127-3034	1	Gasket-Collector
11	127-3037	2	Gasket-Throttle
12	127-3775	1	Gasket-Manifold, Exhaust
13	127-2987	1	Gasket
14	127-3043	2	Gasket-Cooler, E G R
15	127-3016	1	Gasket
16	127-3050	1	Gasket-Intake Valve, E G R
17	127-3051	1	Gasket-Out Valve, E G R
18	127-3859	2	Gasket-D P F
19	127-3056	4	Gasket-Sensor
20	127-3069	1	Gasket-Idle, Shaft B
21	127-3004	1	Gasket
22	125-6909	2	O-Ring
23	127-2973	1	O-Ring
24	125-7075	1	O-Ring
25	125-7022	1	Gasket
26	125-7024	1	Gasket
27	125-7047	1	Gasket
28	125-7048	1	O-Ring
29	125-6979	1	Gasket
30	125-7110	1	Gasket
31	125-7026	1	Gasket
32	125-6978	1	Gasket
33	127-3074	1	O Ring-Pump, Fuel
34	125-7174	1	Washer-Seal
35	125-7176	1	Washer-Seal
36	127-3166	2	Washer-Seal
37	125-7177	1	Washer-Seal
38	125-7192	1	Gasket
39	127-3174	2	Gasket
40	93-0418	3	O-Ring
41	125-7197	2	O-Ring
42	127-3000	1	Hone
43	125-7248	1	Gasket-Liquid

Attachments and Accessories

For 31200 Groundsmaster 360 4-Wheel Drive Multi-Purpose Machine

Product Name	Model/Part
Green Diesel Cap	107-2172
Premium Transmission/Hydraulic Tractor Fluid (55 Gallon Drum)	108-1183
Premium Transmission/Hydraulic Tractor Fluid (5 Gallon Pail)	108-1184
Premium Engine Oil 15w40 (55 Gallon Drum)	121-6394
Premium Engine Oil 15w40 (5 Gallon Pail)	121-6395
5in Air Cleaner Safety Element	114-4057
MVP Filter Kit	30261
Beacon Kit	120-0256
Electrical Accessory Kit	115-0019
Hourmeter, Wireless Hourmeter System	115-4754
Registration Plate Kit	120-6678
Jack Stand Kit	30579
Quick Attach Front Frame	30509
V-Plow Mounting Kit	30378
48in V-Plow	30750
Diagnostic Display Box	85-4750
Weight Transfer Kit	120-6683
Auxiliary Power Unit	120-6675
Winter Attachment Joystick Kit	31219
Winter Enclosure	31220
Blade-Belt Kit, 72in Side Discharge Deck	105-7272
Atomic Blade Kit (3 Blade Pack)	119-8020
Blade-Rotary, Atomic (24.5in)	110-0624-03
Blade-Rotary, Medium Flow (24.5in)	110-0621-03
Leaf Mulching Kit	108-5273
72in Side Discharge Mower (CE)	30354
CE Kit, 72in Side Deck With French Guards	30679
CE Guard Kit, Groundsmaster 360 Multi-Purpose Machine	30689
Road Homologation Light Kit, Non-Cab Unit (Europe)	30512
Road Light Kit, Non Cab Unit (North America)	30513
Slow Moving Vehicle Sign Kit	115-0014
Locking Latch	98-9315
Grammer Seat with Air Ride Suspension	30511
Vinyl Backrest Extension Kit	120-0583
Hardtop Sunshade	30359
72in Base Deck	30353
72in Side Discharge Deck	30481
100in Rear Discharge Deck	31101

Notes:

Notes:

Notes:

TORO®

Count on it.