Form No. 3396-270 Rev A

CE Light Kit

2014 and Before Groundsmaster® 4500/4700 or Reelmaster® 7000 Traction Unit

Model No. 30491

Installation Instructions

⚠ WARNING

CALIFORNIA
Proposition 65 Warning

This product contains a chemical or chemicals known to the State of California to cause cancer, birth defects, or reproductive harm.

Installation

Loose Parts

Use the chart below to verify that all parts have been shipped.

Procedure	Description	Qty.	Use
1	No parts required	–	Disconnect the battery
2	No parts required	–	Drill the mounting holes.
3	Right headlight-bracket assembly	1	Install the headlights.
	Left headlight-bracket assembly	1	
	Screw (3/8 x 2-1/2 inches)	6	
	Flange nut (3/8 inch)	6	
	Flat washer (3/8 x 7/8 inches)	8	
	Rubber hanger	2	
	Spacer	4	
	Screw (5/16 x 1-5/8 inch)	4	
	Flange nut (5/16 inch)	4	
	Right-headlight assembly	1	
	Left-headlight assembly	1	
4	Horn	1	Install the horn.
	Horn bracket	1	
	Bolt (3/8 x 5/8 inch)	1	
	Flange nut (3/8 inch)	1	
	Bolt (1/4 x 2 inches)	2	
	Nut (1/4 inch)	2	
5	Flasher module	1	Install the flasher module.
	Self-tapping screw (#10 x 1/2 inch)	1	
6	Relay switch	1	Install the relay switch.
	Bolt (#8 x 1/2 inch)	1	

© 2015—The Toro® Company
8111 Lyndale Avenue South
Bloomington, MN 55420

Register at www.Toro.com.

CE

Original Instructions (EN)
Printed in the USA
All Rights Reserved

3396-270 A

Procedure	Description	Qty.	Use
7	Switch-panel enclosure Control decal Self-tapping screw (1/4 x 1/2 inch) Hazard switch Beacon switch Horn switch Horn-button cover	1 1 3 1 1 1 1	Install the switch panel.
8	Carriage bolt (#10 x 5/8 inch) Locknut (#10) Sensor plate Flange nut (1/4 inch) Brake-sensor bracket Bolts (1/4 x 3/4 inch) Slotted screw (#6 x 1 inch) Washer (#6) Brake sensor Locknut (#6)	1 1 1 2 1 2 2 4 1 2	Install the brake sensor bracket.
9	Beacon Beacon socket Beacon bracket (ROPS model) U-bolt Flange nut (3/8 inch) Beacon bracket (cab model) Screws Nuts	1 1 1 1 2 1 2 2	Install the beacon assembly.
10	Left light bracket Right light bracket Screw (5/8 x 3 inches) Flat washer Jam nut (5/8 inch) Rear-lamp assembly	1 1 4 4 2 2	Install the rear lamps.
11	Plate light Plate bracket Screw (#10 x 5/8 inch) Locknut (#10) Self-tapping screw (5/16 x 1/2 inch)	1 1 2 2 2	Install the registration-plate bracket.
12	Wire harness Switch-panel-enclosure cover Screw (#10 x 1/2 inch) Mounting pad Cable tie	1 1 3 3 11	Install the wiring harness.
13	Fuse (10 A) Fuse (15 A) Fuse-box decal	3 1 1	Install the fuses into the fuse box.

Media and Additional Parts

Description	Qty.	Use
Installation instructions	1	Read instructions before installing and operating the kit
Parts catalog	1	Use to reference part numbers

1

Disconnecting the Battery

No Parts Required

Procedure

1. Position the traction unit on a level surface, set the parking brake, lower the cutting units, turn the ignition off, and remove the key.

   ⚠ CAUTION

   If you leave the key in the ignition switch, someone could accidently start the engine and seriously injure you or bystanders.

   Remove the key from the ignition switch before you do any maintenance.

2. Disconnect the negative-battery cable from the battery post (Figure 1).

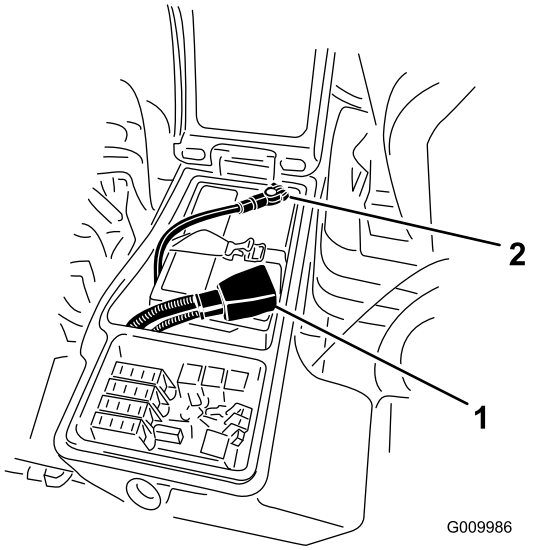

Figure 1

1. Positive-battery cable
2. Negative-battery cable

2

Drilling the Mounting Holes

No Parts Required

Installing the Headlights

1. Remove the nuts from the 2 carriage bolts securing the headlights to the traction-unit frame (Figure 2).
2. Remove the 2 slotted screws securing the top of the platform shroud to the frame (Figure 2).
3. Unplug the headlight-wire connectors and remove the shroud from the frame (Figure 2).

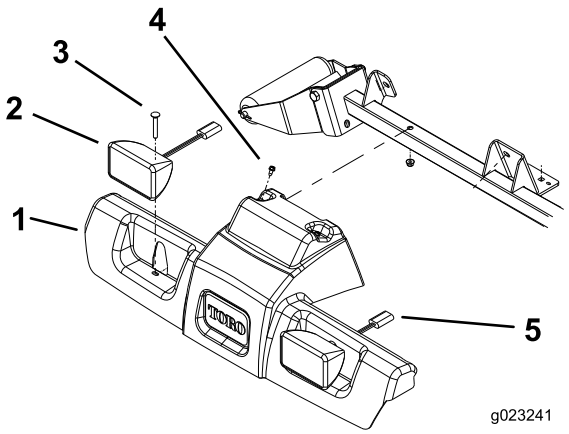

Figure 2

1. Platform shroud
2. Headlight assembly
3. Carriage bolt and flange nut
4. Self-tapping screw
5. Headlight connector

4. Using the dimensions shown in (Figure 3), locate and drill 6 holes 1.0 cm (0.4 inch) diameter through both walls of the roller-support tube.

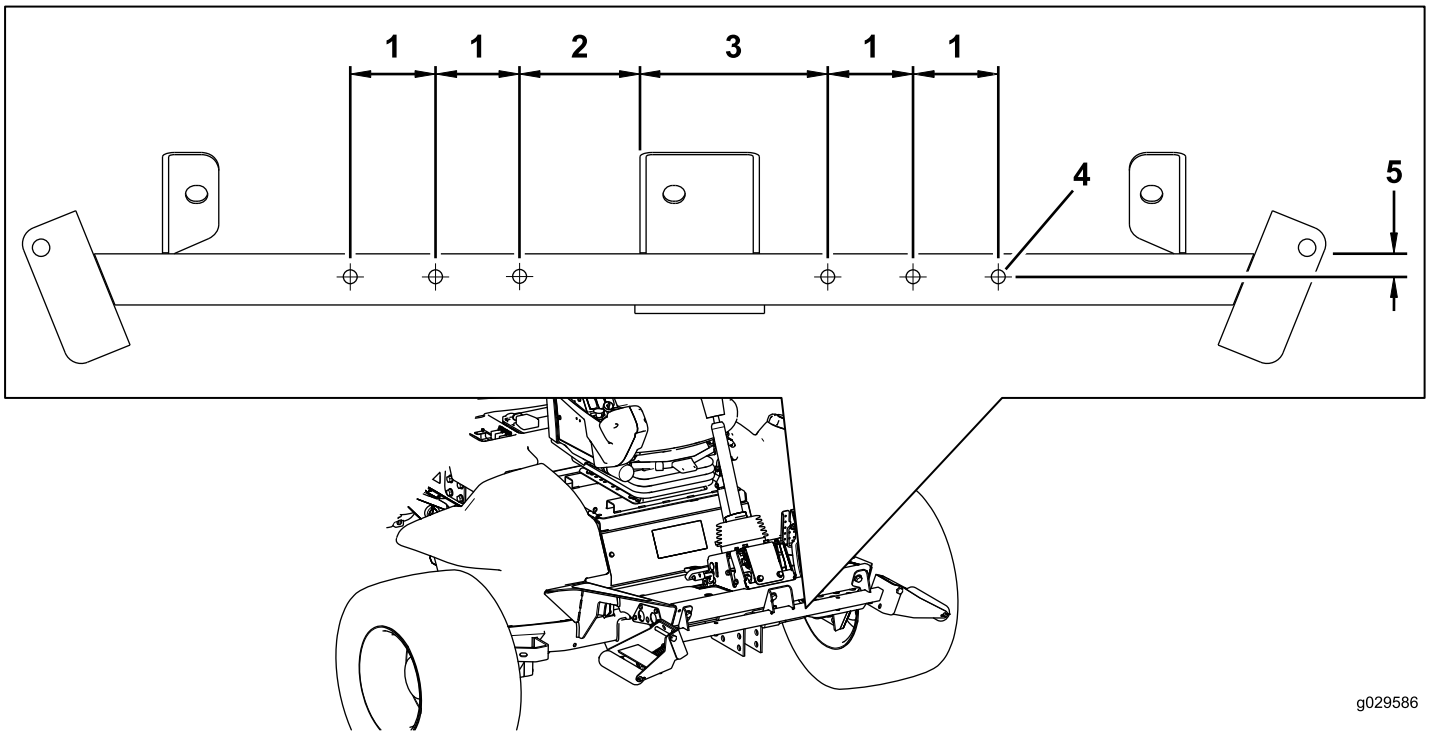

Figure 3

1. 6.35 cm (2-1/2 inches)
2. 8.89 cm (3-1/2 inches)
3. 13.97 cm (5-1/2 inches)
4. 1.0 cm (0.4 inch) diameter
5. 1.9 cm (3/4 inch)

Drilling the Holes for the Horn Bracket

Using the dimensions shown in (Figure 4), locate and drill 2 holes 0.71 cm (0.28 inch) diameter through both walls of the roller-support tube.

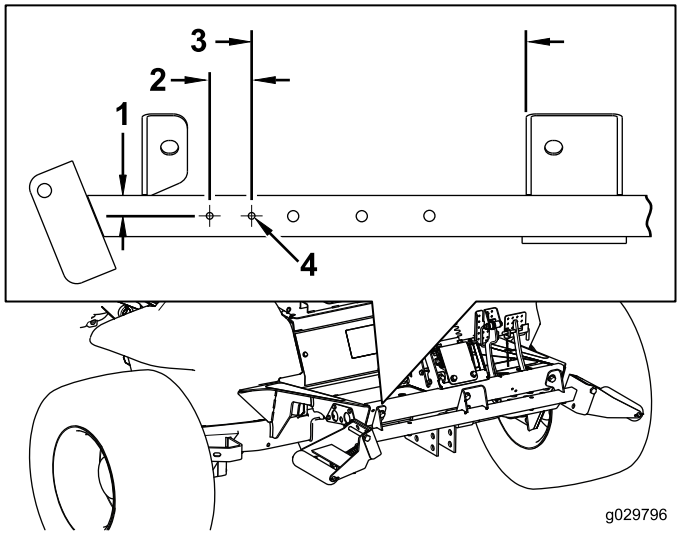

Figure 4

1. 1.9 cm (0.75 inch)
2. 3.81 cm (1-1/2 inch)
3. 25.4 cm (10 inch)
4. 0.71 cm (0.28 inch) diameter

Drilling a Hole in the Control Arm for the Flasher Module

1. Remove the 2 bolts that secure the plate to the right cover of the control arm (Figure 5). Remove the plate from the control arm.

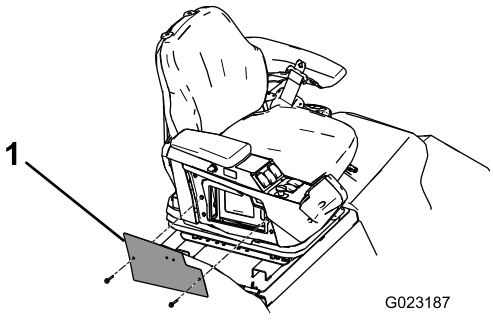

Figure 5

1. Control-arm plate

2. Using the dimensions shown in (Figure 6), locate and drill a 4.5 mm (0.17 inch) diameter hole through the control-arm cover and control arm.

   Note: Do not to cut any internal components of the control arm.

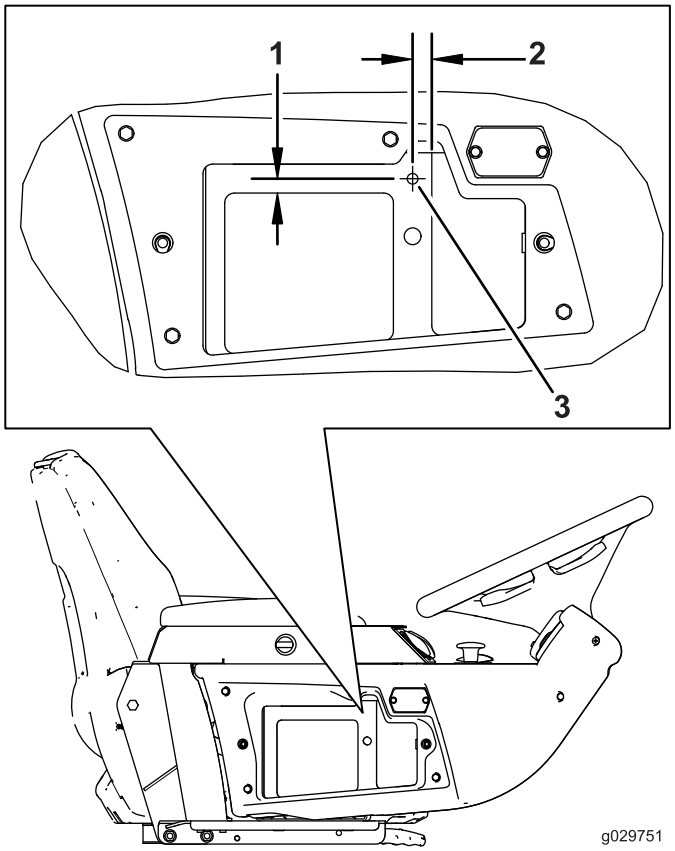

Figure 6

1. 9.6 mm (0.38 inch)
2. 12.7 mm (1/2 inch)
3. 4.5 mm (0.17 inch) diameter

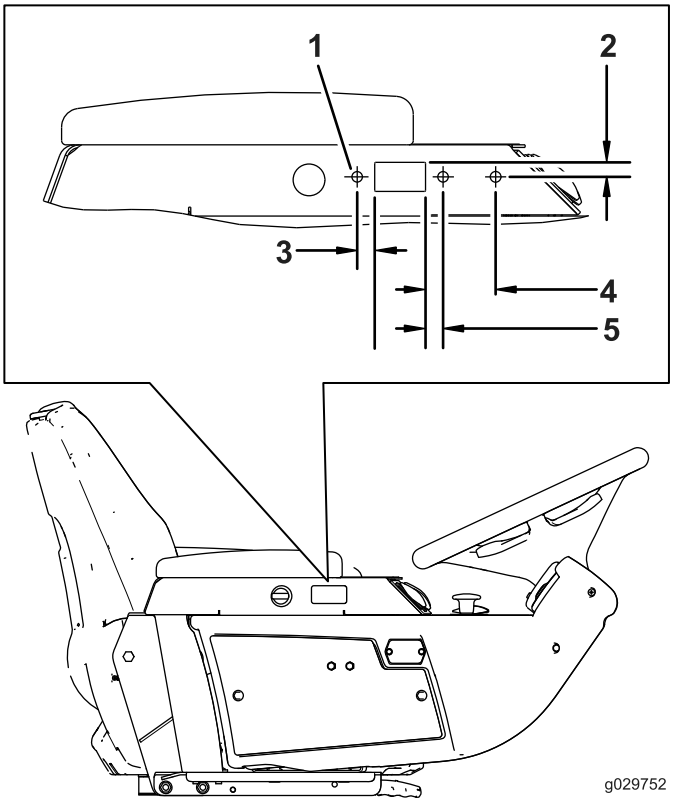

Figure 7

1. 5.5 mm (.22 inch) diameter
2. 12.7 mm (1/2 inch)
3. 12.7 mm (1/2 inch)
4. 51 mm (2 inches)
5. 12.7 mm (1/2 inch)

Switch-Panel Enclosure Hole Location

Using the dimensions shown in (Figure 7), locate and drill 3 holes 5.5 mm (.219 inch) diameter through the control-arm cover and control arm.

Note: Do not to cut any internal components of the control arm.

Drilling Holes in the Rear Bumper for the Registration Plate

Using the dimensions shown in (Figure 8) to locate and drill 2 holes 9/32 inch diameter through the outside wall of the rear bumper.

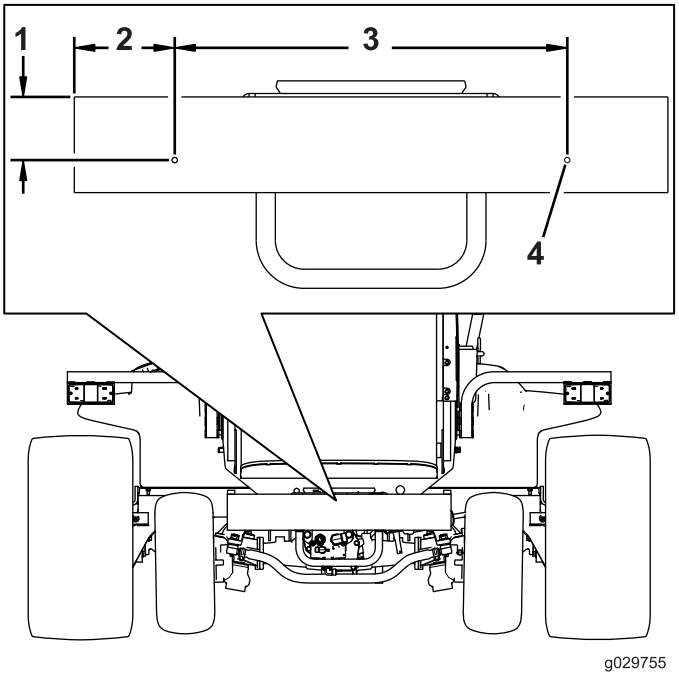

Figure 8

1. 8.3 cm (3-1/3 inches)
2. 13.3 cm (5-1/4 inches)
3. 52.07 cm (20-1/2 inches)
4. 9/32 inch diameter

Drilling holes in the Front Footrest for the Brake-Pedal Switch

Using the dimensions shown in (Figure 9) to locate and drill 2 holes 9/32 inch diameter through the front footrest.

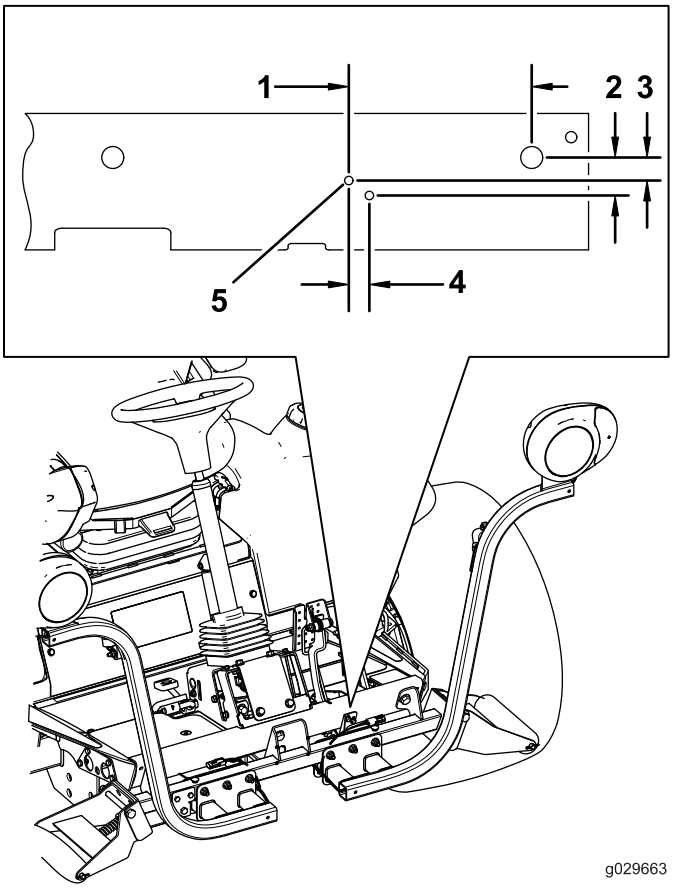

Figure 9

1. 15.52 mm (6.11 inches)
2. 32 mm (1.27 inches)
3. 20 mm (0.77 inch)
4. 17 mm (0.68 inch)
5. 9/32 inch diameter

3

Installing the Headlights

Parts needed for this procedure:

1	Right headlight-bracket assembly
1	Left headlight-bracket assembly
6	Screw (3/8 x 2-1/2 inches)
6	Flange nut (3/8 inch)
8	Flat washer (3/8 x 7/8 inches)
2	Rubber hanger
4	Spacer
4	Screw (5/16 x 1-5/8 inch)
4	Flange nut (5/16 inch)
1	Right-headlight assembly
1	Left-headlight assembly

Installing the Headlight Bracket to a ROPS Model

1. Fasten the left and right headlight brackets to the front of the roller-support tube with 6 bolts (3/8 x 2-1/2 inches) and flange nuts (3/8 inch) as shown in Figure 10.

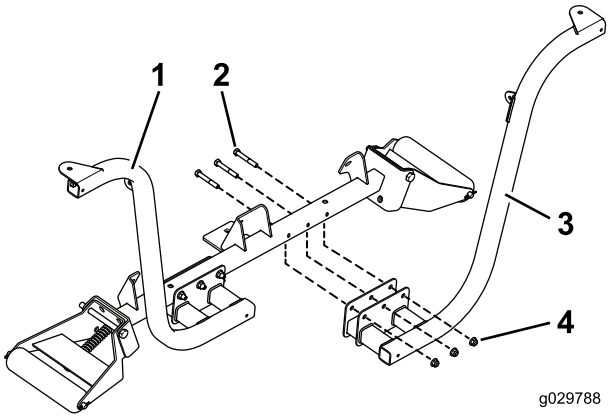

Figure 10

1. Installed headlight-bracket assembly
2. Bolts (3/8 x 2-1/2 inches)
3. Headlight bracket assembly
4. Flange nuts (3/8 inch)

Note: Position the bolts so the flange nuts are toward the front of the traction unit.

2. Fasten the left and right headlight assemblies to the headlight brackets (Figure 11) with the fasteners supplied with the lights.

Note: Ensure that the turn-signal lens on the headlight is positioned toward the outside of the traction unit.

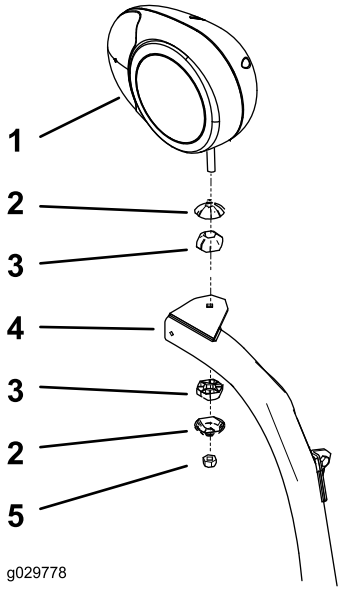

Figure 11

1. Right headlight bracket
2. Articulated joint shell
3. Articulated joint
4. Headlight arm
5. Locknut (10 mm)

3. Tighten the locknut to firmly hold the headlight assembly to the headlight-assembly bracket.

Note: Do not overtighten the locknut.

Installing the Headlight Bracket to a Cab Model

1. Loosely install a rubber hanger to the underside of each tab on the front of the cab with a bolt (5/16 x 1-5/8 inch), 2 washers (3/8 inch), a spacer, and a flange nut (5/16 inch) as shown in Figure 12.

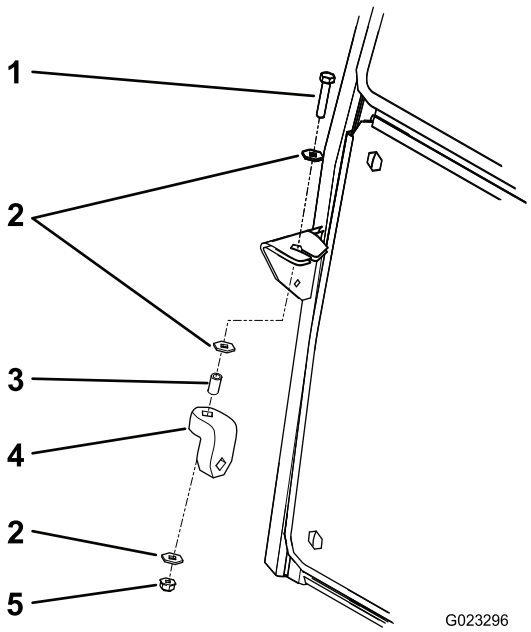

Figure 12

1. Bolt (5/16 x 1-5/8 inches)
2. Washer (3/8 inch)
3. Spacer
4. Rubber hanger
5. Flange nut (5/16 inch)

2. Loosely install the left and right headlight brackets to the front of the roller-support tube with 6 bolts (3/8 x 2-1/2 inches) and flange nuts (3/8 inch). Position the brackets as shown in Figure 13.

Note: Ensure that the holes in the light-bracket tabs align with the holes in the rubber hangers.

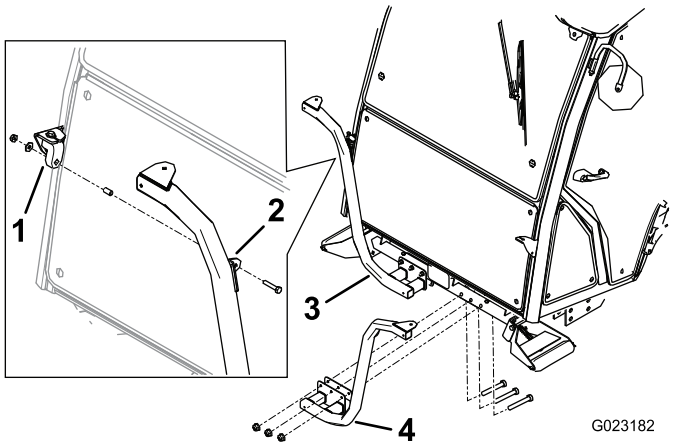

Figure 13

1. Rubber hanger
2. Bracket tab
3. Right headlight bracket
4. Left headlight bracket

3. Fasten the left and right headlight assemblies to the headlight brackets (Figure 14) with the fasteners supplied with the lights.

Note: Ensure that the turn-signal lens on the headlight is positioned toward the outside of the traction unit.

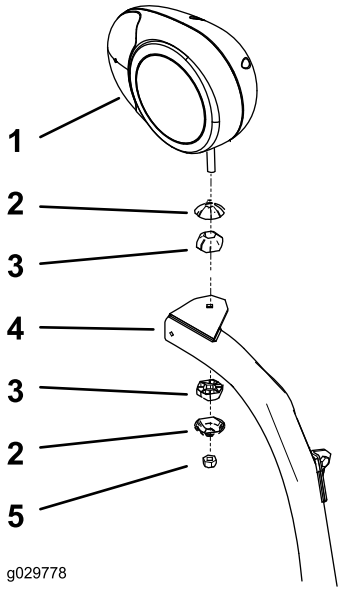

Figure 14

1. Right headlight bracket
2. Articulated joint shell
3. Articulated joint
4. Headlight arm
5. Locknut (10 mm)

4. Tighten the locknut to firmly hold the headlight assembly to the headlight-assembly bracket.

Note: Do not overtighten the locknut.

Note: You cannot use the front and rear cab lights for CE applications. Disable the front and rear cab lights as follows:

- **Front**–Pop the lights out of the cab roof and disconnect the wires from the lights. Install the lights into the cab.
- **Rear**–Remove the screws securing the lenses to the lights. Remove the bulbs from the lights and install the lenses to the lights.

4

Installing the Horn

Parts needed for this procedure:

1	Horn
1	Horn bracket
1	Bolt (3/8 x 5/8 inch)
1	Flange nut (3/8 inch)
2	Bolt (1/4 x 2 inches)
2	Nut (1/4 inch)

Procedure

1. Secure the horn strap to the horn bracket with a bolt (3/8 x 5/8 inch) and a flange nut (3/8 inch) as shown in Figure 15.

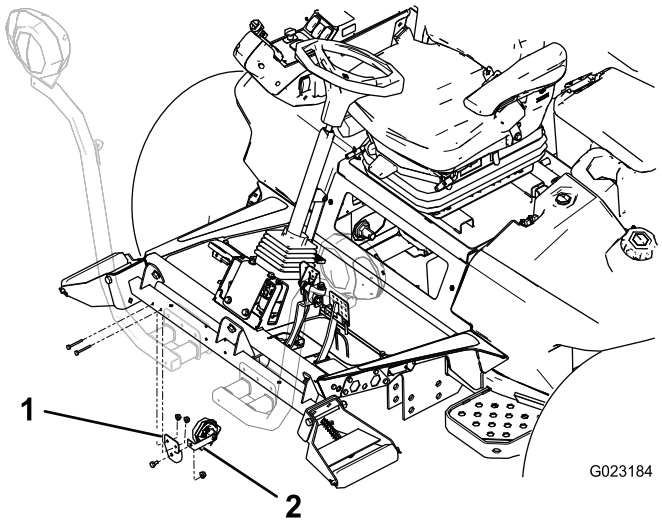

Figure 15

1. Horn bracket
2. Horn strap

2. Mount the horn bracket to the back side of the roller-support tube with 2 bolts (1/4 x 2 inches) and nuts (1/4 inch). Rotate the horn so it faces down (Figure 15).

5

Installing the Flasher Module

Parts needed for this procedure:

1	Flasher module
1	Self-tapping screw (#10 x 1/2 inch)

Procedure

Secure the flasher module with the self-tapping screw (#10 x 1/2 inch) as shown in Figure 16.

Note: Do not overtighten the screw.

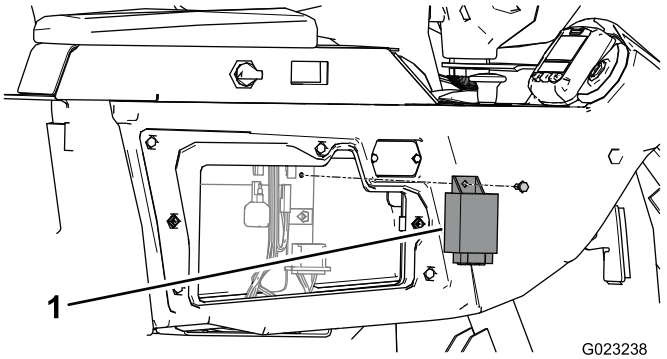

Figure 16

1. Flasher module

6

Installing the Relay Switch

Parts needed for this procedure:

1	Relay switch
1	Bolt (#8 x 1/2 inch)

Install the relay switch.

Secure the relay switch with the bolt (#8 x 1/2 inch) as shown in Figure 17.

Note: Do not overtighten bolt.

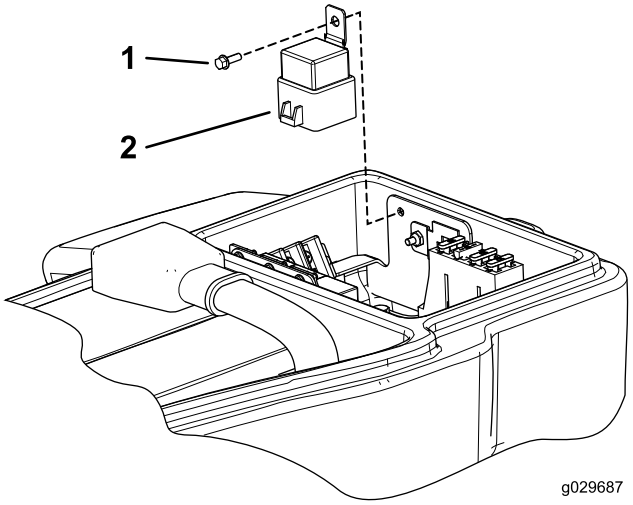

Figure 17

1. Bolt (#8 x 1/2 inch)
2. Relay

7

Installing the Switch Panel

Parts needed for this procedure:

1	Switch-panel enclosure
1	Control decal
3	Self-tapping screw (1/4 x 1/2 inch)
1	Hazard switch
1	Beacon switch
1	Horn switch
1	Horn-button cover

Procedure

1. Secure the switch enclosure to the control arm with 3 screws (1/4 x 1/2 inch) as shown in Figure 18.

   Note: Do not overtighten screws.

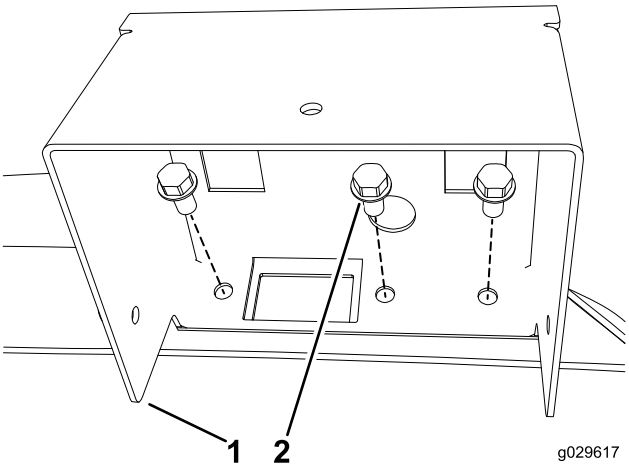

Figure 18

1. Switch panel enclosure
2. Self-tapping screw (1/4 x 1/2 inch)

2. Affix the light-panel decal onto the switch-panel enclosure as shown in Figure 19.

   Note: Ensure that the surface is clean and dry before affixing the decal.

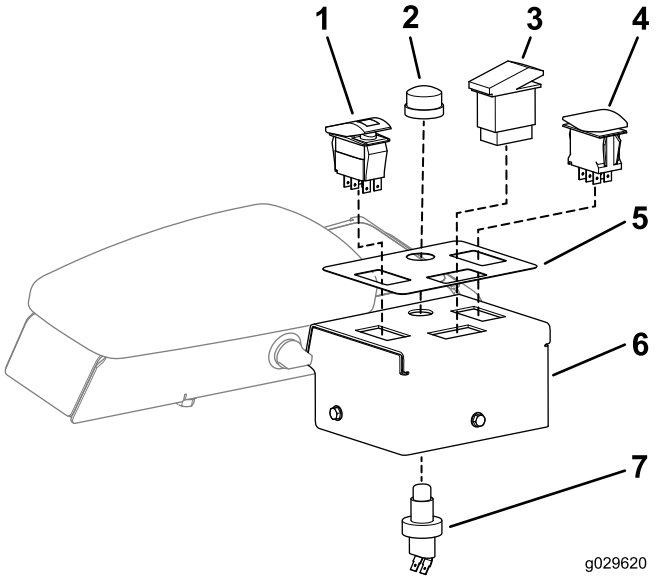

Figure 19

1. Turn-signal switch
2. Horn-button cover
3. Beacon switch
4. Hazard switch
5. Light-panel decal
6. Switch-panel enclosure
7. Horn switch

3. Install the turn-signal switch into the left hole in switch-panel enclosure (Figure 19).

   Note: The turn-signal switch is an On-Off-On switch.

4. Install the beacon switch into the top hole in the switch-panel enclosure (Figure 19).

   Note: The beacon switch is an On-None-On switch.

5. Install the hazard switch into the right hole in the switch-panel enclosure (Figure 19).

   Note: The hazard switch is an On-None-On switch and has a hazard symbol on it.

6. Insert the horn button up through the hole in the switch-panel enclosure (Figure 19).
7. Secure the horn button to the switch-panel enclosure by threading on the rubber-horn button (Figure 19).
8. Connect the switches to the wiring harness.

8

Installing Brake-Sensor Bracket

Parts needed for this procedure:

1	Carriage bolt (#10 x 5/8 inch)
1	Locknut (#10)
1	Sensor plate
2	Flange nut (1/4 inch)
1	Brake-sensor bracket
2	Bolts (1/4 x 3/4 inch)
2	Slotted screw (#6 x 1 inch)
4	Washer (#6)
1	Brake sensor
2	Locknut (#6)

Procedure

1. Disassemble the proximity-sensor assembly on the brake-pedal lever (Figure 20) and set aside all the parts except the proximity sensor.

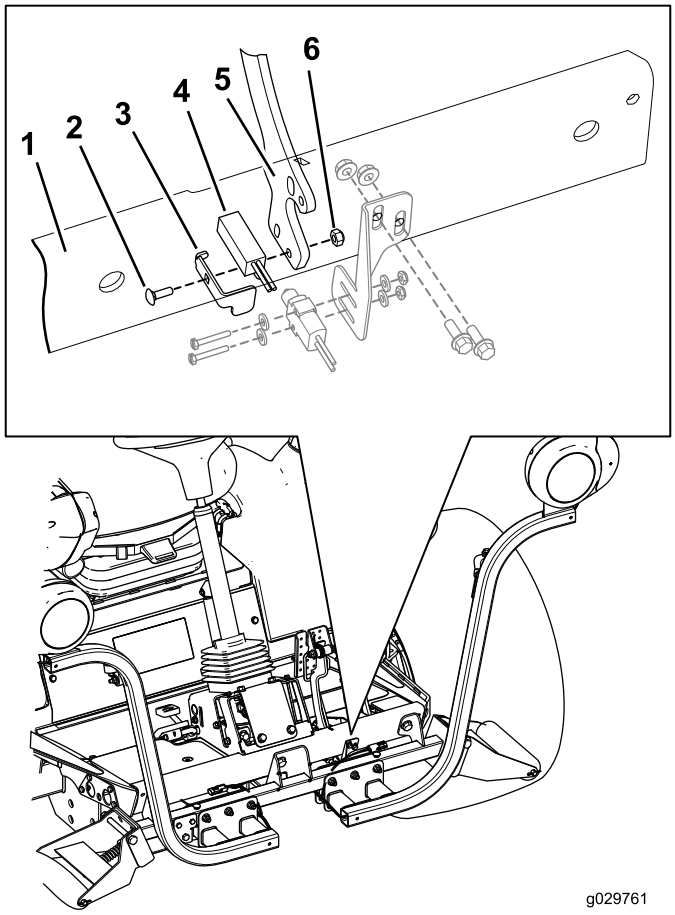

Figure 20

1. Forward footrest
2. Carriage bolt (#10 x 5/8 inch)
3. Brake-sensor plate
4. Proximity sensor
5. Brake-pedal lever
6. Locknut (#10)

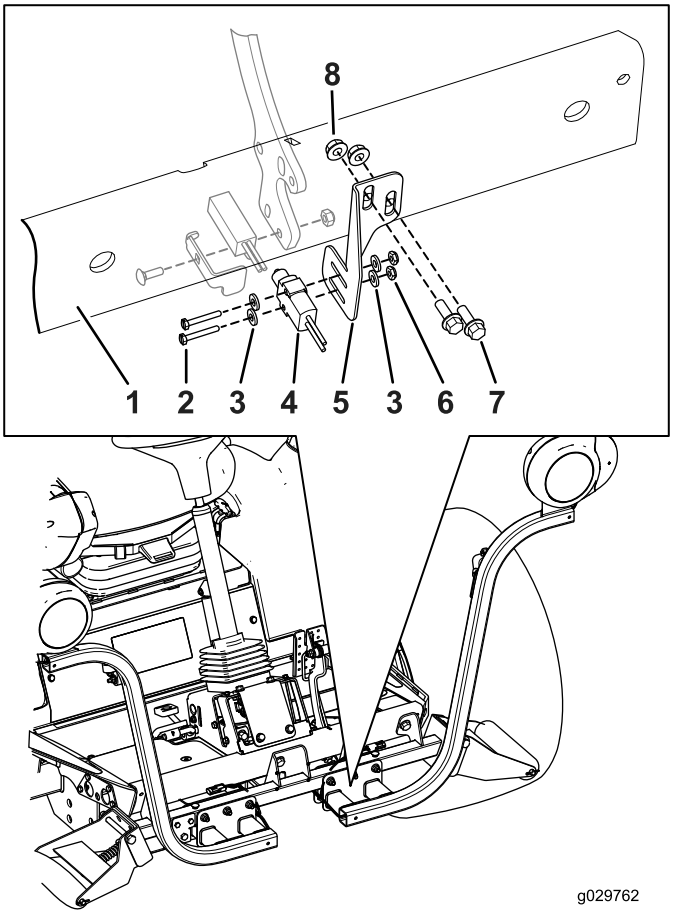

Figure 21

1. Forward footrest
2. Slotted screw (#6 x 1 inch)
3. Washer (#6)
4. Brake sensor
5. Brake-sensor bracket
6. Locknut (#6)
7. Bolts (1/4 x 3/4 inch)
8. Flange nut (1/4 inch)

2. Assemble the proximity-sensor assembly to the brake lever using the carriage bolt (#10 x 5/8 inch), brake-sensor plate, proximity sensor, and locknut (#10) as shown in Figure 20.

   Note: Ensure that you do not overtighten the bolts. Overtightening the bolts will damage the sensor.

3. Locate the brake-sensor bracket mounting holes on the front footrest and loosely install the brake-sensor bracket to the front footrest using 2 bolts (1/4 x 3/4 inch) and 2 flange nuts (1/4 inch).

   Note: You will need to move the brake-sensor bracket up or down to align the brake sensor to the brake-sensor plate (Figure 21).

4. Loosely install the brake sensor to the brake-sensor bracket with the 2 slotted screws (#6 x 1 inch), 2 washers, and 2 flange nuts (Figure 21).

5. Align the brake sensor in or out and the brake-sensor bracket up or down so that the switch on the brake sensor is pressing against the sensor plate.

6. Complete the brake-sensor assembly installation by tightening all of the mounting hardware.

   - Tighten the 2 slotted screws (#6 x 1 inch) and 2 flange nuts to firmly secure the brake sensor to the brake-sensor bracket.

     Note: Ensure that you do not overtighten the screws. Overtightening the screws will damage the sensor.

   - Tighten the bolts (1/4 x 3/4 inch) and 2 flange nuts (1/4 inch) holding the brake-sensor bracket to the front footrest to 1017 to 1243 N-cm (90 to 110 in-lb).

Important: After you complete the installation of the light kit, verify that the brake sensor activates the brake

lights when the brake pedal is pressed. Realign the brake sensor if necessary.

9

Installing the Beacon Assembly

Parts needed for this procedure:

1	Beacon
1	Beacon socket
1	Beacon bracket (ROPS model)
1	U-bolt
2	Flange nut (3/8 inch)
1	Beacon bracket (cab model)
2	Screws
2	Nuts

Installing the Beacon Light to a ROPS Model

1. Loosely secure the beacon-light bracket to the side of the ROPS post with the U-bolt and 2 flange nuts (3/8 inch), positioning them as shown in Figure 22.

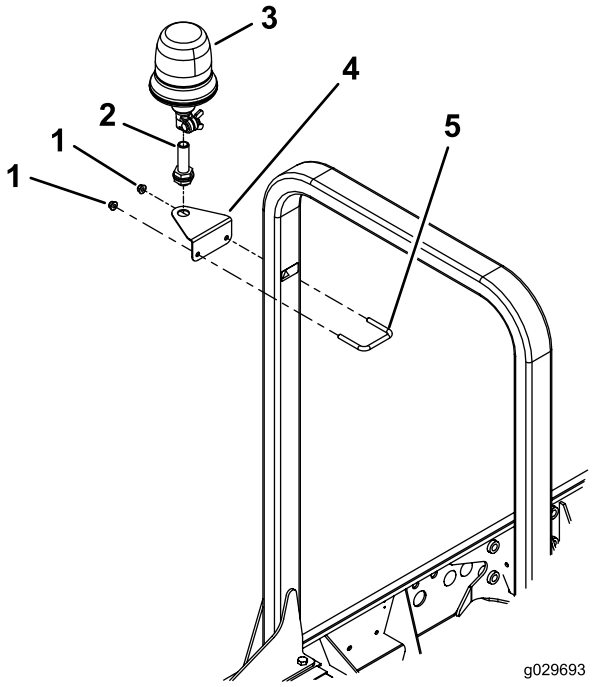

Figure 22

1. Flange nut (3/8 inch)
2. Beacon socket
3. Beacon
4. Beacon bracket
5. U-bolt

2. Position the beacon-light bracket 32 cm (12–5/8 inches) from the top of the ROPS and tighten the U-bolt nuts as shown inFigure 23.

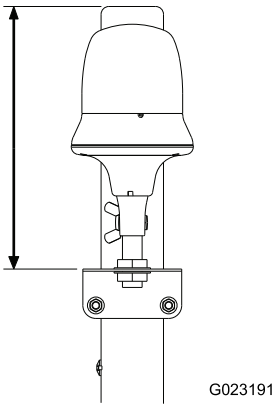

Figure 23

3. Mount the beacon socket to the beacon-light bracket with the included jam nut (Figure 22).
4. Plug the beacon onto the socket and tighten the wing nut (Figure 22).

Installing the Beacon Light to a Cab Model

1. Secure the beacon-light bracket to the tab on the right-rear corner of the cab frame with 2 screws and 2 nuts (Figure 24).

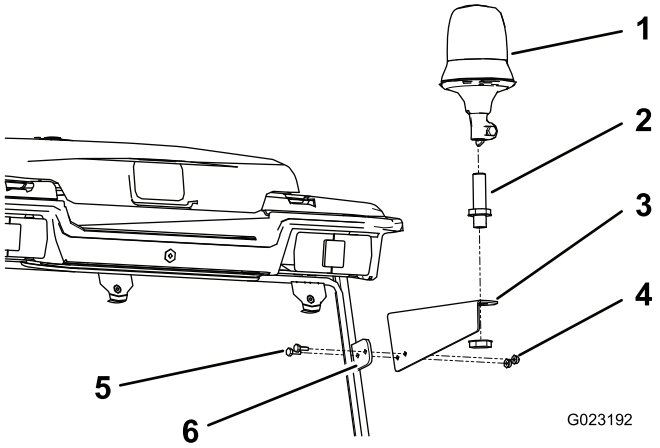

Figure 24

1. Beacon
2. Beacon socket
3. Beacon bracket
4. Flange nut
5. Screw
6. Tab on cab

2. Mount the beacon socket to the beacon-light bracket with the jam nut included (Figure 24).
3. Plug the beacon onto the socket and tighten the wing nut (Figure 24).

10

Installing the Rear Lamps

Parts needed for this procedure:

1	Left light bracket
1	Right light bracket
4	Screw (5/8 x 3 inches)
4	Flat washer
2	Jam nut (5/8 inch)
2	Rear-lamp assembly

Procedure

1. Remove the 2 bolts, 2 washers, and 2 nuts securing the reservoir-mounting bracket to the left frame rail (Figure 25).

   Note: Stabilize the reservoir and bracket to prevent them from falling.

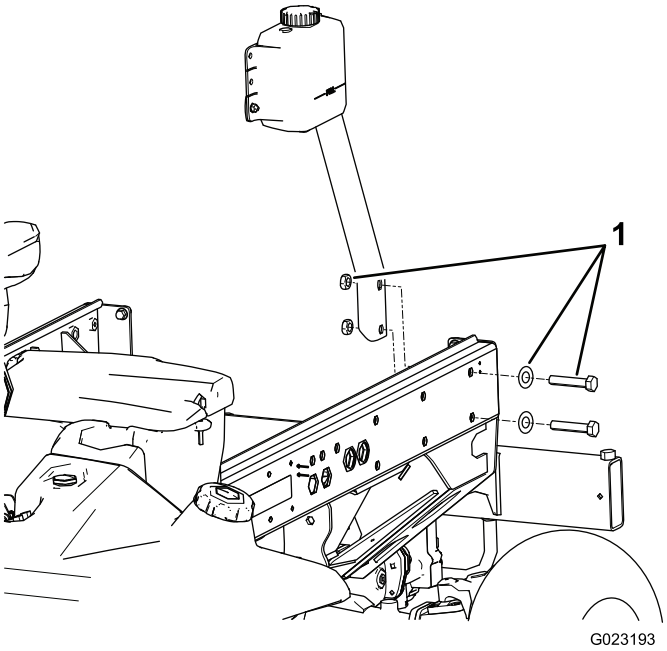

Figure 25

1. Reservoir bracket mounting bolts, washers, and nuts

2. Secure the left light bracket to the bracket and frame with 2 bolts (5/8 x 3 inch), 2 flat washers and 2 jam nuts as shown in (Figure 26).

   Note: The left and right light brackets are different. Ensure that you use the correct mount.

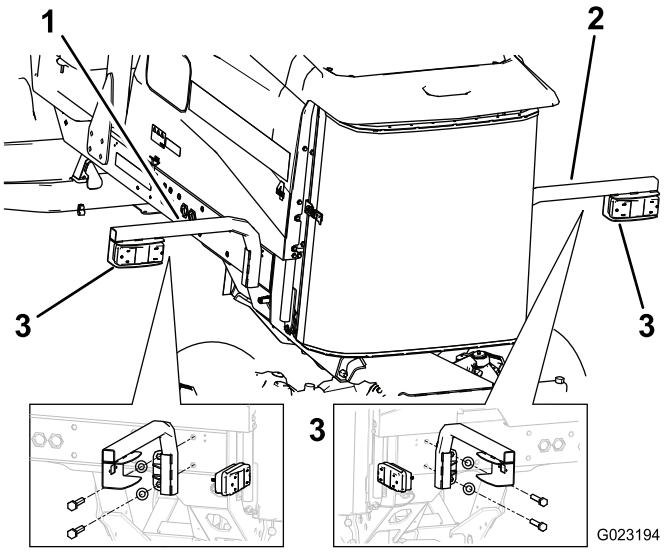

Figure 26

1. Left light bracket
2. Right light bracket
3. Rear lamp

3. Mount the rear lamp to light bracket with the bolts and nuts included with the light (Figure 26).

   Note: Ensure that the light is positioned so that the plug is through the hole in the light bracket and the amber end is toward the outside of the traction unit.

4. Remove the 2 rear bolts and 2 washers from the right frame rail (Figure 27).

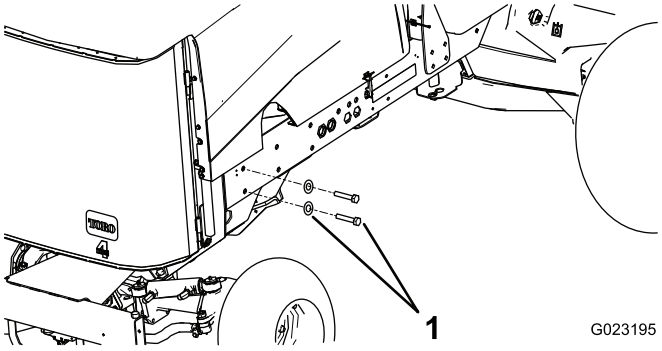

Figure 27

1. Bolts and washers

5. Secure the right light bracket to the frame with 2 bolts (5/8 x 3 inch) and 2 flat washers (Figure 26).

11

Installing the Registration-Plate Bracket

Parts needed for this procedure:

1	Plate light
1	Plate bracket
2	Screw (#10 x 5/8 inch)
2	Locknut (#10)
2	Self-tapping screw (5/16 x 1/2 inch)

Procedure

1. Secure the light to the registration-plate bracket with 2 screws (#10 x 5/8 inch) and 2 locknuts (Figure 28).

   Note: Do not overtighten screws. Ensure that the lens points downward and the wires are inserted through the hole in the registration-plate bracket.

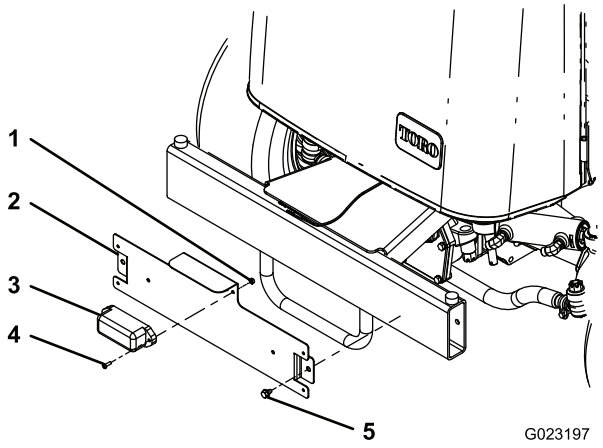

Figure 28

1. Locknut (#10)
2. Registration-plate bracket
3. Plate light
4. Screw (#10 x 5/8 inch)
5. Self-tapping screw (5/16 x 1/2 inch)

2. Mount the registration-plate bracket to the rear bumper with 2 self-tapping screws (5/16 x 1/2 inch).

   Note: Position the registration-plate bracket as shown in (Figure 28).

12

Installing the Wiring Harness

Parts needed for this procedure:

1	Wire harness
1	Switch-panel-enclosure cover
3	Screw (#10 x 1/2 inch)
3	Mounting pad
11	Cable tie

Procedure

Use the following instructions and illustrations to route and connect the wiring harness.

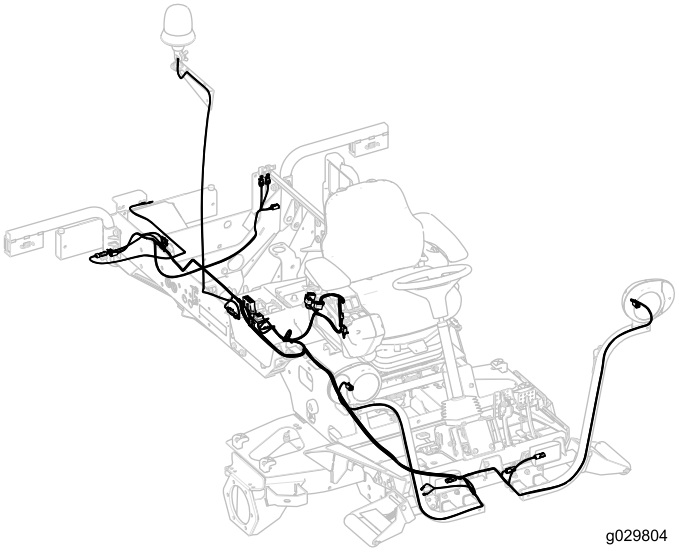

Figure 29

1. Remove the flange-head screw securing the compartment clamp and seal to the traction unit (Figure 30).

   Note: Remove the clamp and seal to gain access to the fuse compartment.

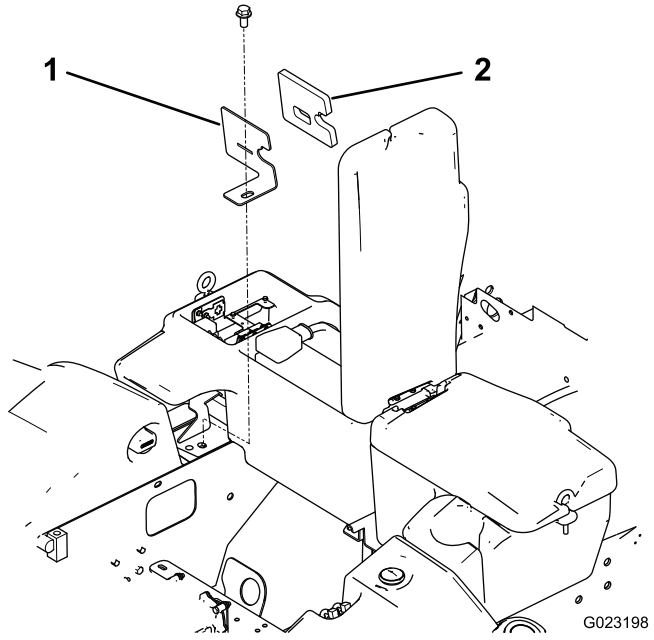

Figure 30

1. Compartment clamp
2. Seal

2. From under the right side of the traction unit, route the fuse-block section of the wiring harness up to and into the opening in the fuse compartment (Figure 31).

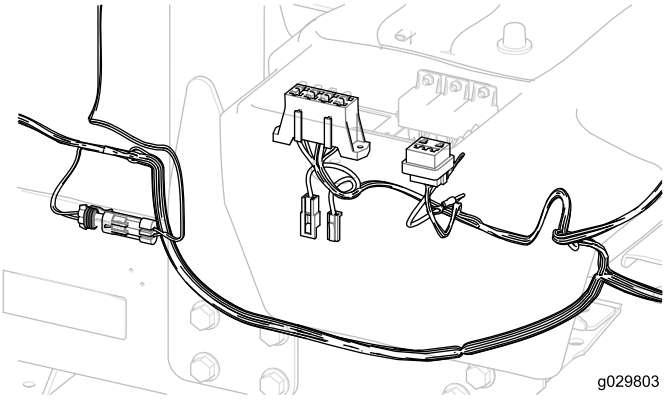

Figure 31

Important: When routing the wiring harness, do not pull it across sharp edges, which may damage the wires. Wires must not contact hot or moving parts. Secure the wiring harness with cable ties.

3. Mount the wiring-harness-fuse block next to the existing fuse block with the 2 self-tapping screws (#8 x 1/2 inch) included with the wiring harness (Figure 32).

   Note: Do not overtighten the screws.

4. Connect the small-ring terminal from the wiring harness to 1 of the screws on the ground-block terminal (Figure 32).

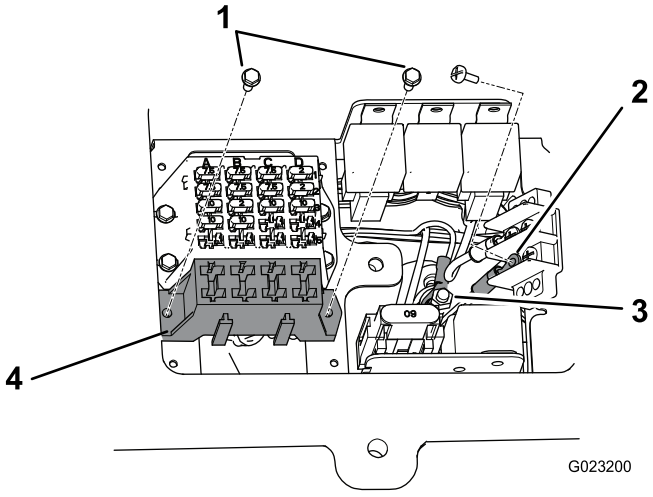

Figure 32

1. Self-tapping screws (#8 x 1/2 inch)
2. Ground-block terminal
3. Junction block
4. Wiring-harness-fuse block

5. Connect the large-ring terminal, from the wiring harness, to the stud on the junction block (Figure 32).
6. Install the compartment clamp and seal to the traction unit with the flange-head screw (Figure 30).
7. Route the harness to the flasher module and plug in the connector.

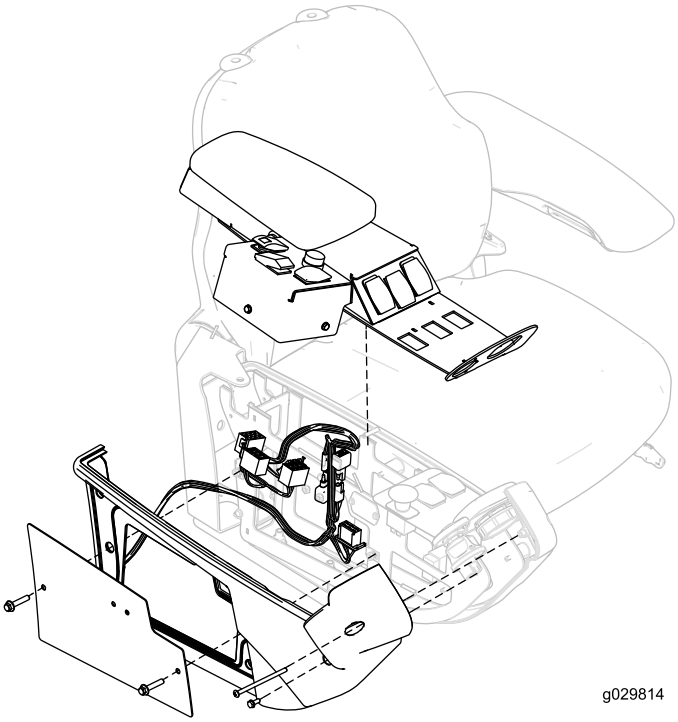

Figure 33

Note: You may need to remove the right armrest panel and armrest to route the wiring harness (Figure 33).

8. Route the harness to the switch-panel-enclosure and plug the connectors into the horn, beacon, turn signal, and hazard switches.
9. Install the switch-panel-enclosure cover to switch-panel enclosure with 3 screws (#10 x 1/2 inch) as shown in Figure 34.

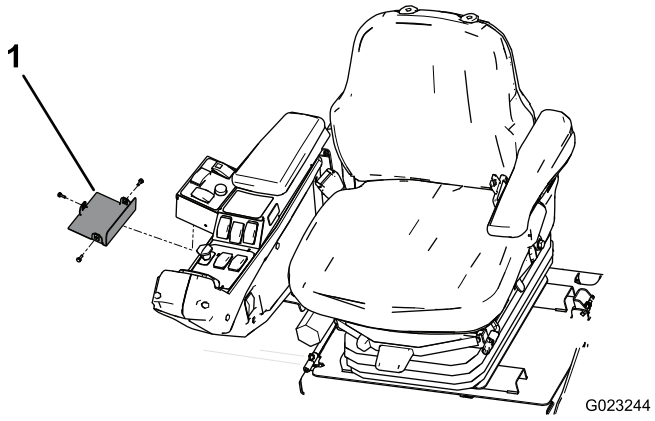

Figure 34

1. Switch-panel-enclosure cover

10. Route the front end of the wiring harness under the operator platform to the front of the traction unit (Figure 35).

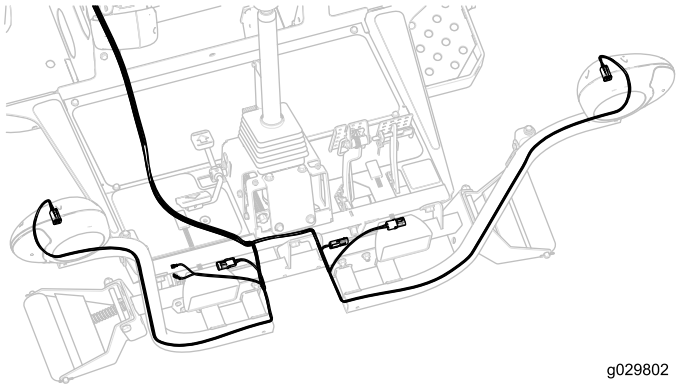

Figure 35

11. Thread each harness connector through the appropriate headlight bracket and connect it to the headlight (Figure 35).
12. Plug the wiring harness lead, with the 2 connectors, into the horn (Figure 35).
13. Position the platform shroud on top of the frame (Figure 36).
14. Plug the light-kit wiring harness connectors into the shroud headlights (Figure 36).

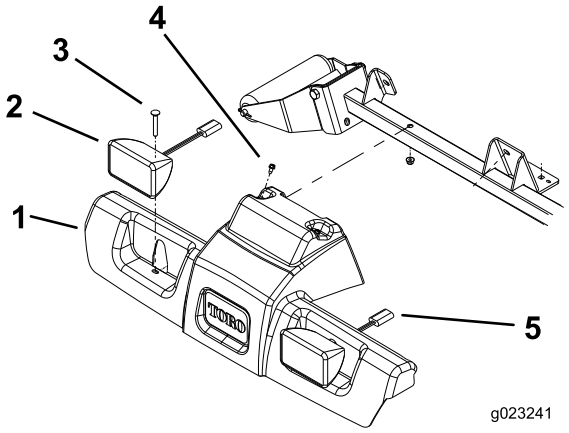

Figure 36

1. Platform shroud
2. Headlight
3. Carriage bolt and nut
4. Washer-head screws and nuts
5. Headlight-wire connectors

15. Secure the shroud and the headlights to the frame with the 2 carriage bolts and nuts you removed previously(Figure 36).
16. Route the rear section of the wiring harness to the right upright of the ROPS or cab (Figure 37).

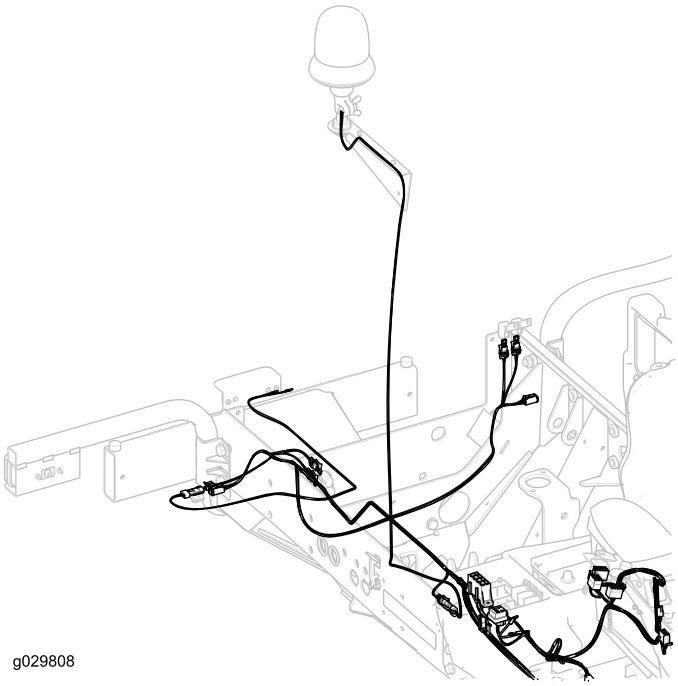

Figure 37

Note: Connect the wires for the beacon and the rear lights to the wiring harness for the main light kit.

17. Route the wiring harness up the ROPS or cab post and plug it into the beacon socket (Figure 38).
18. Affix the 3 mounting pads to the ROPS or cab post, and secure the wiring harness to the pads with 3 cable ties (Figure 38).

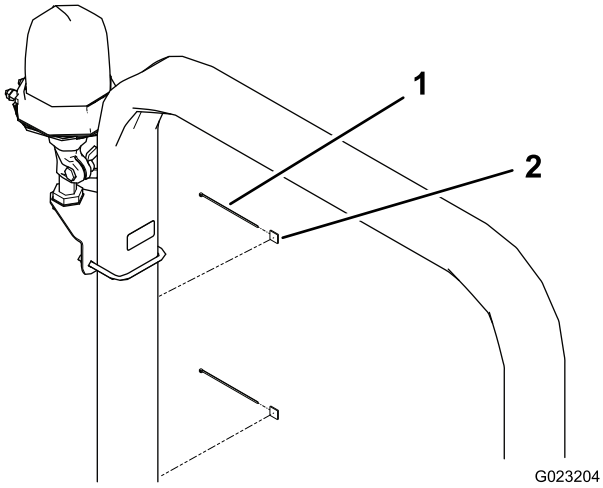

Figure 38

1. Mounting pad
2. Cable tie

19. Route the right rear wiring harness under the right side of the traction unit to the right rear light (Figure 39).

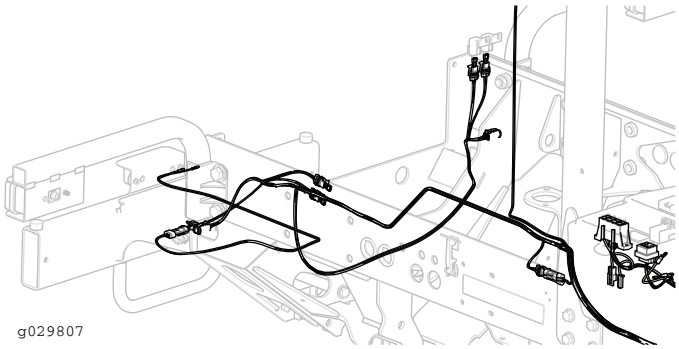

Figure 39

20. Plug the wiring harness connector into the light connector.
21. Route the left rear wiring harness under the left side of the traction unit to the left rear light (Figure 39).

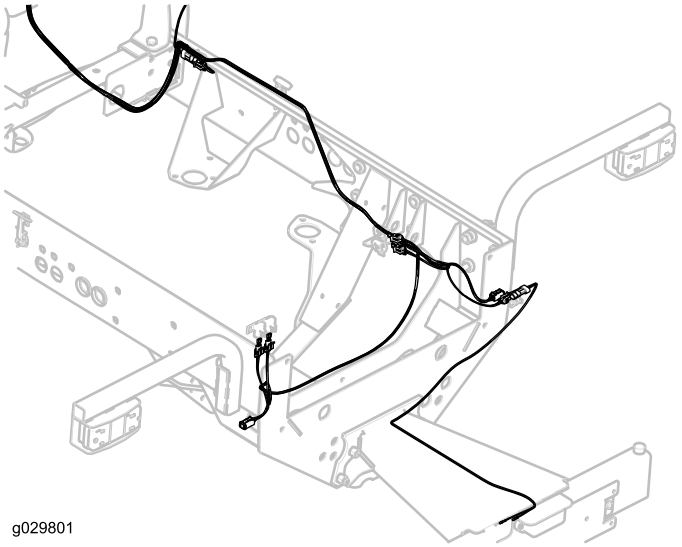

Figure 40

22. Plug the wiring harness connector into the light connector.
23. Route the wiring harness to the registration plate light and plug the wiring harness connector into the light connector, if applicable (Figure 40).

    Important: Secure the wiring harness with cable ties so that it does not contact any hot or moving parts.
24. Install any parts that were removed from the traction unit to route the wiring harness.

13

Installing the Fuses and Decal

Parts needed for this procedure:

3	Fuse (10 A)
1	Fuse (15 A)
1	Fuse-box decal

Procedure

1. Insert the 3 (10 A) and 1 (15A) fuses into the fuse block slot (Figure 41).

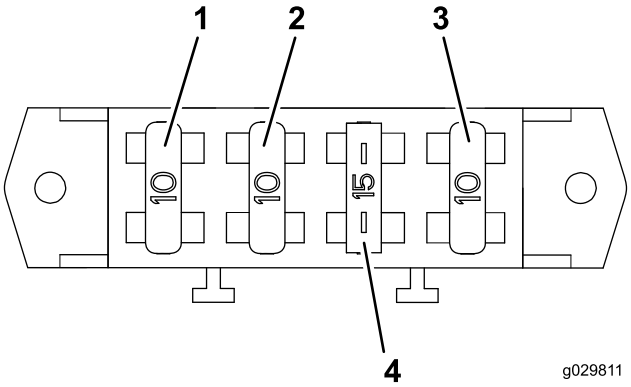

Figure 41

1. Fuse (10 A)
2. Fuse (10 A)
3. Fuse (10 A)
4. Fuse (15 A)

2. Install the fuse-box decal to the storage-box cover (Figure 42).

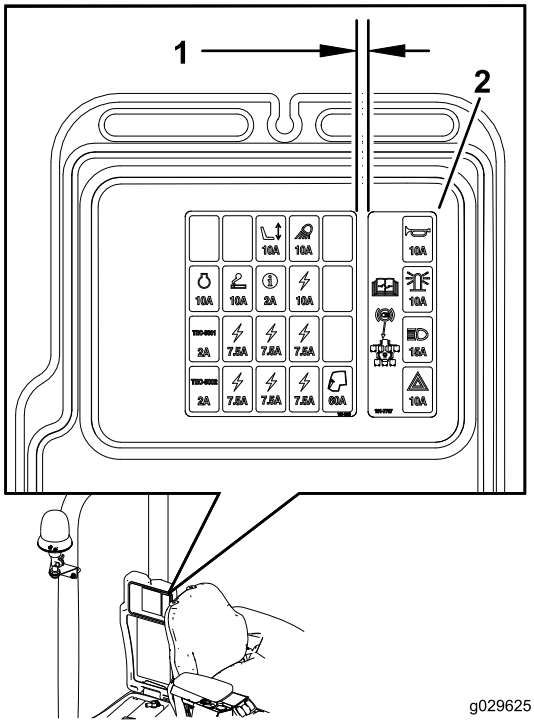

Figure 42

1. 6.25 mm (1/4 inch)
2. Fuse-box decal

14

Connecting the Battery

No Parts Required

Procedure

Connect the negative battery cable to the battery post (Figure 43).

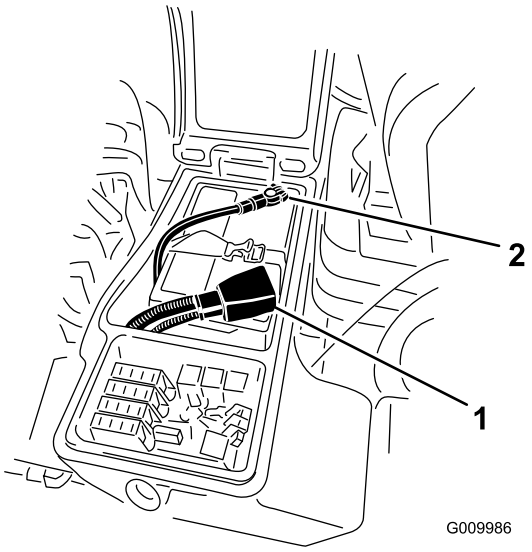

Figure 43

1. Positive battery cable
2. Negative battery cable

Operation

Controls

Hazard Switch

Press the hazard switch (Figure 44) to the On position to activate the front and rear flashing hazard lights.

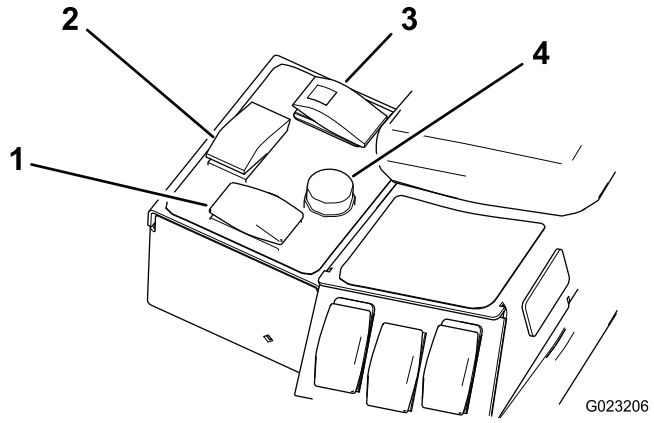

Figure 44

1. Hazard switch
2. Turn signal switch
3. Beacon switch
4. Horn button

Turn-Signal Switch

Press down on the left side of the turn-signal switch (Figure 44) to activate the left-turn signal. The center position is off.

Press down on the right side of the turn-signal switch (Figure 44) to activate the right-turn signal. The center position is off.

Beacon Switch

Press the beacon switch (Figure 44) to activate the beacon.

Horn Button

Press the horn button (Figure 44) to activate the horn.

Aiming the Headlights

1. Loosen the mounting nuts and position each headlight so that it points straight ahead.
2. Tighten each mounting nut just enough to hold the headlight in position.
3. Place a flat piece of sheet metal over the face of the headlight.
4. Mount a magnetic protractor onto the plate.
5. While holding the assembly in place, carefully tilt the headlight downward 3 degrees, then tighten the nut.
6. Repeat the procedure for the other headlight.