Form No. 3396-391 Rev A

SnowMax 724/824 QXE Snowthrower

Model No. 38711—Serial No. 316000001 and Up

Model No. 38712—Serial No. 316000001 and Up

Operator's Manual

Introduction

This machine is intended to be used by residential homeowners. It is designed for removing snow from paved surfaces, such as driveways and sidewalks, and other surfaces for traffic on residential or commercial properties. It is not designed for removing materials other than snow, nor is it designed for clearing off gravel surfaces.

Read this information carefully to learn how to operate and maintain your machine properly and to avoid injury and machine damage. You are responsible for operating the machine properly and safely.

You may contact Toro directly at www.Toro.com for machine and accessory information, help finding a dealer, or to register your machine.

Whenever you need service, genuine Toro parts, or additional information, contact an Authorized Service Dealer or Toro Customer Service and have the model and serial numbers of your machine ready. Figure 1 identifies the location of the model and serial numbers on the machine. Write the numbers in the space provided.

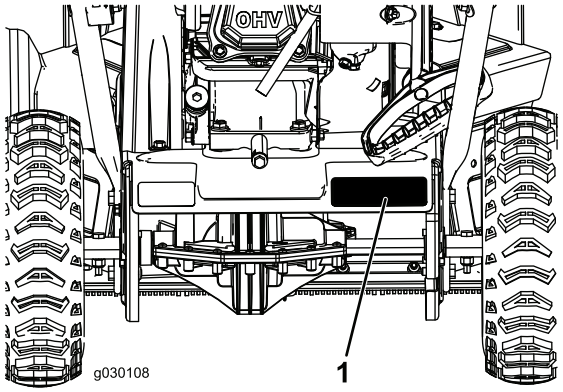

Figure 1

1. Model and serial number location

Model No. _____

Serial No. _____

This manual identifies potential hazards and has safety messages identified by the safety alert symbol (Figure 2), which signals a hazard that may cause serious injury or death if you do not follow the recommended precautions.



Figure 2

1. Safety alert symbol

This manual uses 2 words to highlight information. **Important** calls attention to special mechanical information and **Note** emphasizes general information worthy of special attention.

For models with stated power, the net power of the engine was laboratory rated by the engine manufacturer in accordance with SAE J1940. As configured to meet safety, emission, and operating requirements, the actual engine horsepower on this class of snow thrower will be significantly lower.

© 2015—The Toro® Company
8111 Lyndale Avenue South
Bloomington, MN 55420

Register at www.Toro.com.

CE

Original Instructions (EN)
Printed in the USA
All Rights Reserved
3396-391 A

Contents

Introduction 1
Safety 2
Sound Pressure 2
Sound Power 2
Vibration 2
Safety and Instructional Decals 3
Setup 4
1 Unfolding the Handle 4
2 Installing the Discharge Chute 5
3 Filling the Engine with Oil 5
Product Overview 7
Operation 7
Before Operation 7
Safety 7
Filling the Fuel Tank 7
Checking the Engine-Oil Level 8
During Operation 8
Safety 8
Starting the Engine 8
Engaging the Auger 10
Disengaging the Auger 10
Self-propelling the Machine 10
Stopping the Engine 10
Operating the Quick Stick® 10
Clearing a Clogged Discharge Chute 11
Operating Tips 11
After Operation 11
Safety 11
Preventing Freeze-up after Use 11
Maintenance 12
Recommended Maintenance Schedule(s) 12
Maintenance Safety 12
Checking the Engine Oil Level 12
Checking and Adjusting the Skids 13
Inspecting the Throwing Edges 13
Changing the Engine Oil 13
Replacing the Spark Plug 15
Adjusting the Auger Cable 15
Adjusting the Transmission Cable 15
Checking the Tire Pressure 16
Storage 16
Storing the Snowthrower 16

Safety

This machine meets or exceeds the ISO 8437 specifications in effect at the time of production.

- Read and understand the contents of the manual before you start the engine. Make sure that everyone using this product knows how to use the product and understands the warnings.
- Do not put your hands or feet near moving components on the machine.
- Do not operate the machine without all guards and other safety protective devices in place and working on the machine.
- Keep clear of any discharge opening. Keep bystanders a safe distance from the machine.
- Keep children out of the operating area and under the watchful care of a responsible adult other than the operator. Never allow children to operate the machine.
- Shut the machine off before servicing, fueling, or unclogging.

Sound Pressure

This machine has a sound pressure level at the operator's ear of 89 dBA for model 38711 and 93 dBA for model 38712, which includes an Uncertainty Value (K) of 1 dBA. The sound pressure level was determined according to the procedures outlined in EN ISO 11201.

Sound Power

This machine has a guaranteed sound power level of 102 dBA for model 38711 and 107 dBA for model 38712, which includes an Uncertainty Value (K) of 3.75 dBA. The sound power level was determined according to the procedures outlined in EN ISO 3744.

Vibration

Model 38711:

Measured vibration level for the left hand = 4.3 m/s2.

Measured vibration level for the right hand = 5.1 m/s2.

Uncertainty Value (K) = 2.1 m/s2.

Model 38712:

Measured vibration level for the left hand = 3.5 m/s2.

Measured vibration level for the right hand = 4.1 m/s2.

Uncertainty Value (K) = 2.1 m/s2.

The measured values were determined according to the procedures outlined in EN ISO 20643.

Safety and Instructional Decals

Note: Safety and instruction decals are located near areas of potential danger. Replace damaged decals.

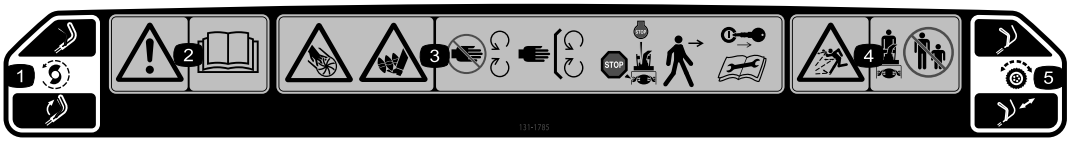

131–1785

Order part no. 131–5921

1. Auger drive—squeeze the lever to engage; release the lever to disengage.
2. Warning—read the *Operator's Manual*.
3. Cutting/dismemberment hazard of hand or foot, auger—keep away from moving parts; keep all guards and shields in place; stop the engine and wait for the auger to stop before leaving the machine; remove the ignition key and read the instructions before servicing or performing maintenance.
4. Thrown object hazard—keep bystanders a safe distance from the snowthrower.
5. Self-propel drive—push down on the handle to engage the self-propel drive.



131–5914

Order part no. 131–5915

1. Cutting/dismemberment hazard of hand or foot, auger—do not place your hand in the chute; remove the ignition key and read the instructions before servicing or performing maintenance.

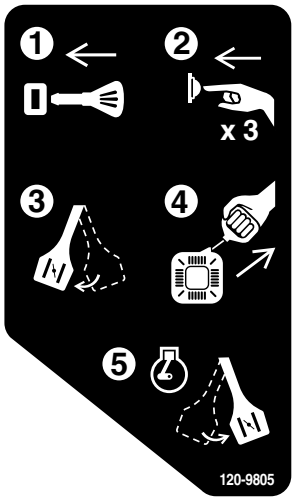

120-9805

1. Insert the key.
2. Prime the engine 3 times.
3. Engage the choke.
4. Pull the starter cord.
5. Once the engine is running, disengage the choke.

Setup

Loose Parts

Use the chart below to verify that all parts have been shipped.

Procedure	Description	Qty.	Use
1	No parts required	–	Unfold the handle.
2	Bolt (1/4–20 X 1–1/2 inch) Lock nut (1/4–20 inch) Carriage bolt (1/4–20 x 1 inch) Lock nut (1/4–20 inch) Screw (1/4–20 X 5/8 inch)	1 1 3 3 1	Install the discharge chute.

1

Unfolding the Handle

No Parts Required

Procedure

Important: **Ensure that the cables are not pinched when unfolding the handle.**

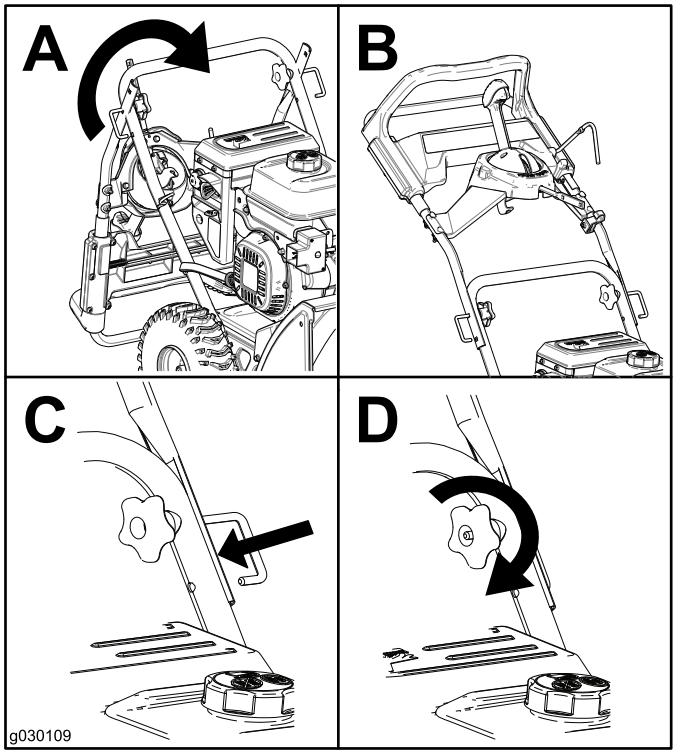

Figure 3

2

Installing the Discharge Chute

Parts needed for this procedure:

1	Bolt (1/4–20 X 1–1/2 inch)
1	Lock nut (1/4–20 inch)
3	Carriage bolt (1/4–20 x 1 inch)
3	Lock nut (1/4–20 inch)
1	Screw (1/4–20 X 5/8 inch)

Procedure

1. Insert the chute post through the bracket into the base of the machine and secure it using a bolt and a lock nut (Figure 4).

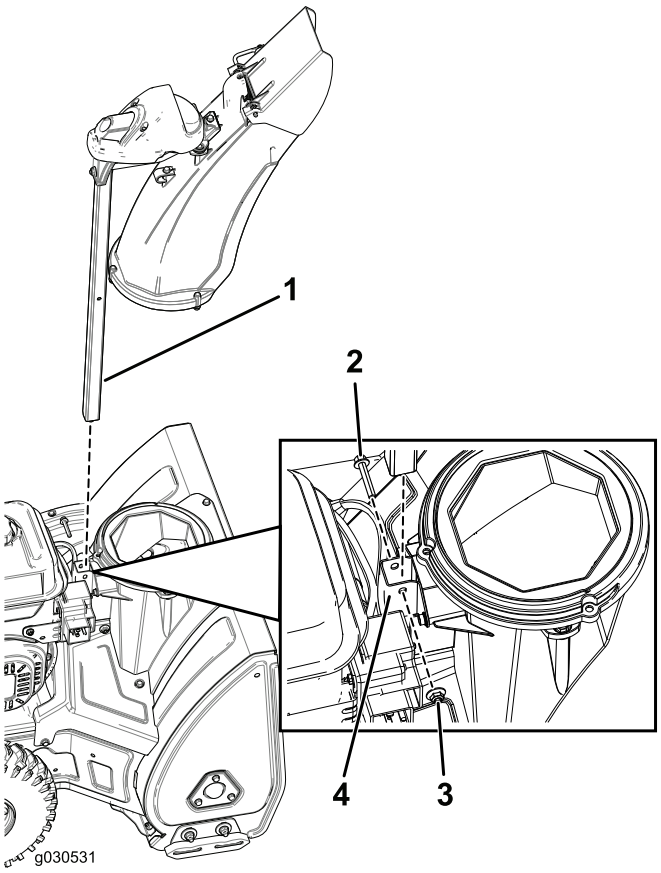

Figure 4

1. Chute post
2. Bolt (1/4–20 X 1–1/2 inch)
3. Lock nut (1/4–20 inch)
4. Bracket

2. Assemble the chute rod and secure the cables (Figure 5).

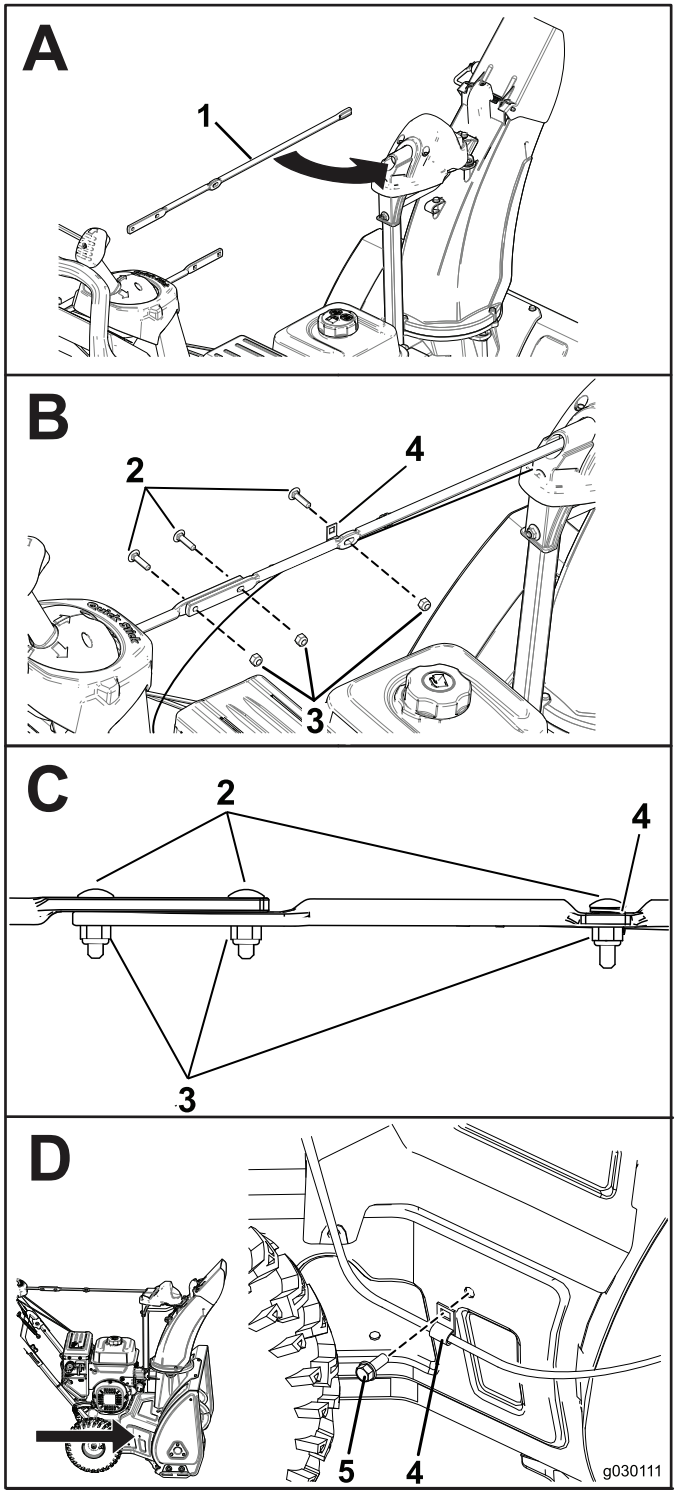

Figure 5

1. Chute rod
2. Carriage bolt (1/4–20 x 1 inch)
3. Lock nut (1/4–20 inch)
4. Cable clip
5. Screw (1/4–20 X 5/8 inch)

3

Filling the Engine with Oil

No Parts Required

Procedure

Your machine comes with oil in the engine.

Model	Max fill
38711	0.5 L (16.9 oz)
38712	0.7 L (23.7 oz)

Oil type: automotive detergent oil with an API service classification of SJ, SL, or higher.

Use Figure 6 below to select the best oil viscosity for the outdoor temperature range expected:

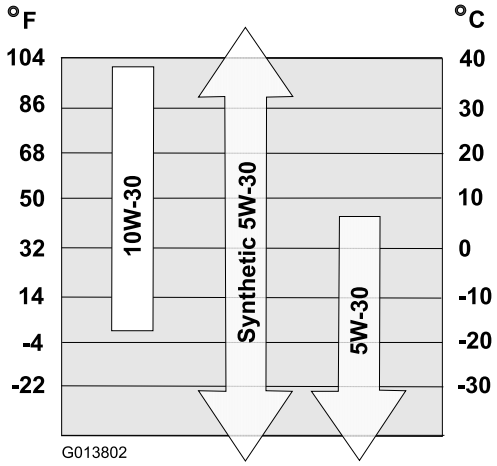

Figure 6

1. Move the machine to a level surface.
2. Clean around the oil-fill cap.
3. Check the oil level and add oil if necessary.

   Note: Do not tighten the dipstick when checking the oil level.

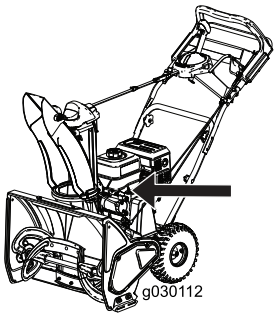

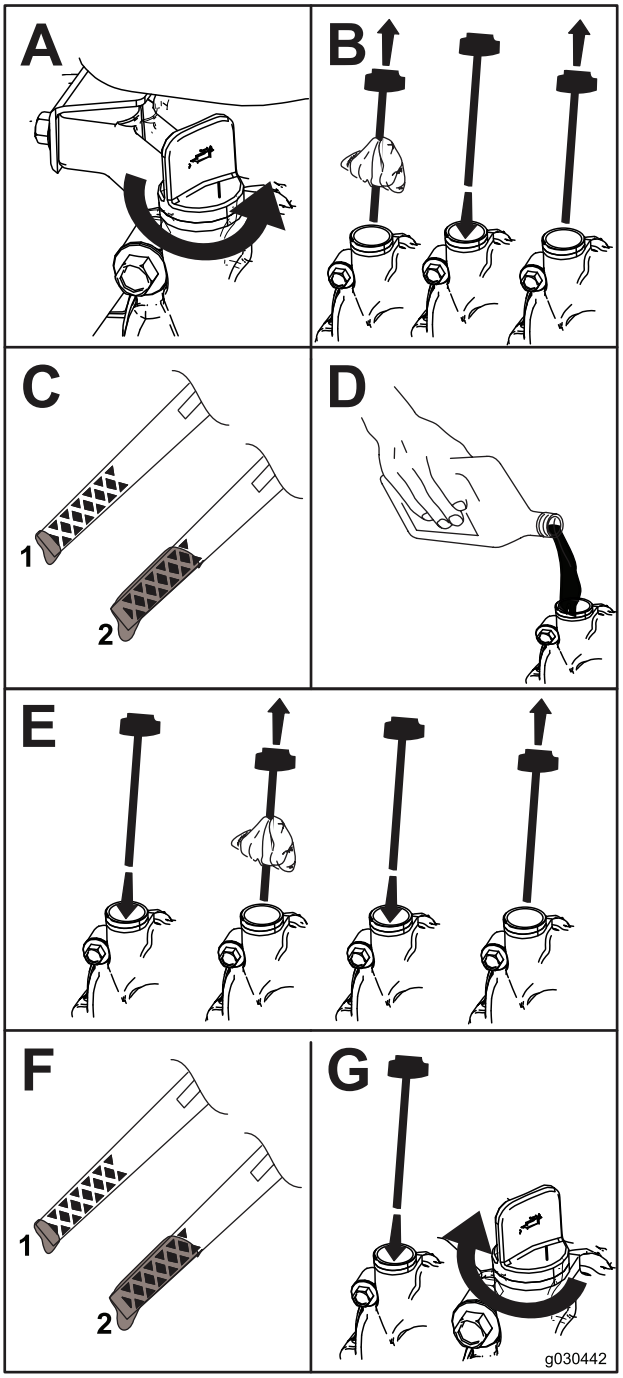

Figure 7

1. Low oil level—add oil
2. Correct oil level

Product Overview

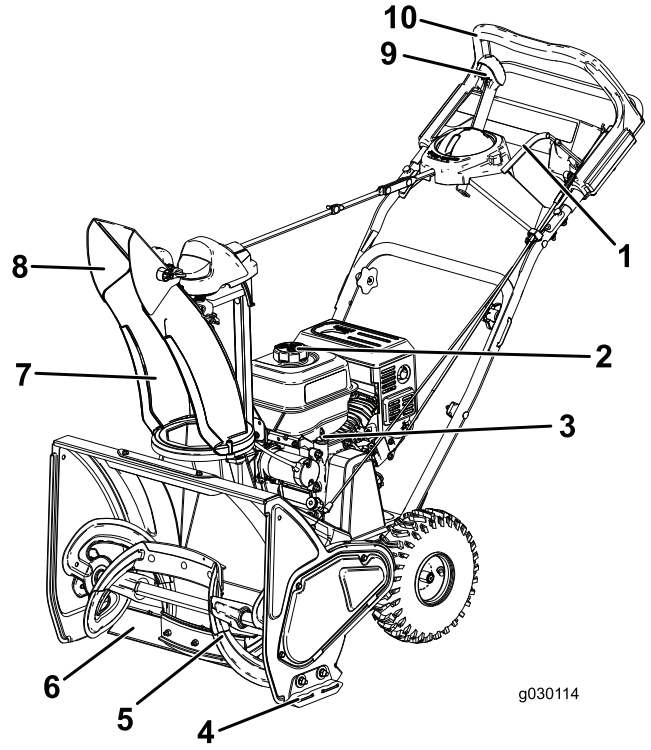

Figure 8

1. Auger lever
2. Fuel tank cap
3. Dipstick
4. Skid
5. Auger
6. Scraper
7. Discharge chute
8. Chute deflector
9. Quick Stick® discharge chute control
10. Upper handle

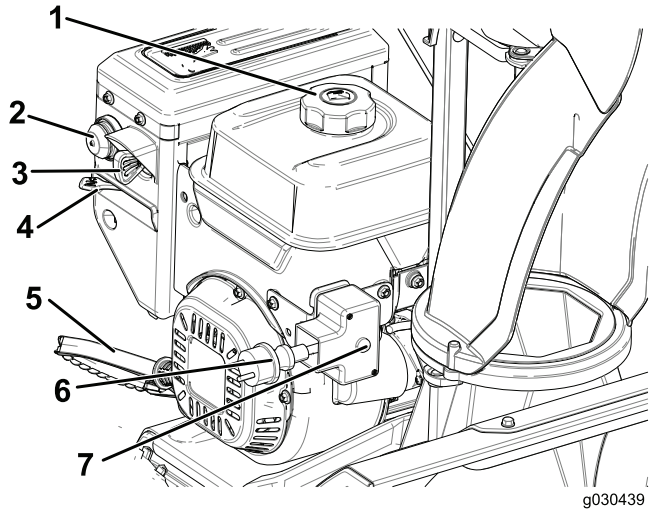

Figure 9

1. Fuel tank cap
2. Primer
3. Ignition key
4. Choke
5. Recoil starter
6. Electric starter plug
7. Electric starter button

Operation

Before Operation

Safety

- Use extension cords and receptacles as specified by the manufacturer for all machines with electric starting motors.
- Do not operate the machine without wearing adequate winter garments. Avoid loose fitting clothing that can get caught in moving parts. Wear slip resistant footwear that will improve footing on slippery surfaces.
- Always wear safety glasses or eye shields during operation or while performing an adjustment or repair to protect eyes from foreign objects that may be thrown from the machine.
- Thoroughly inspect the area where the machine is to be used and remove all doormats, sleds, boards, wires, and other foreign objects.
- If a shield, safety device, or decal is damaged, illegible, or lost, repair or replace it before beginning operation. Also, tighten any loose fasteners.

⚠ DANGER

Gasoline is extremely flammable and explosive. A fire or explosion from gasoline can burn you and others.

- **To prevent a static charge from igniting the gasoline, place the container and/or machine on the ground before filling, not in a vehicle or on an object.**
- **Fill the tank outdoors when the engine is cold. Wipe up spills.**
- **Do not handle gasoline when smoking or around an open flame or sparks.**
- **Store gasoline in an approved fuel container, out of the reach of children.**
- **Do not tip the machine either forward or backward with fuel in the fuel tank; otherwise, fuel may leak out of the machine.**

Filling the Fuel Tank

Recommended Fuel:

- For best results, use only clean, fresh (less than 30 days old), unleaded gasoline with an octane rating of 87 or higher ((R+M)/2 rating method).
- **Ehtanol:** Gasoline with up to 10% ethanol (gasohol) or 15% MTBE (methyl tertiary butyl ether) by volume is acceptable. Ethanol and MTBE are not the same. Gasoline with 15% ethanol (E15) by volume is not approved for use. **Never** use gasoline that contains more

than 10% ethanol by volume, such as E15 (contains 15% ethanol), E20 (contains 20% ethanol), or E85 (contains 85% ethanol). Using unapproved gasoline may cause performance problems and/or engine damage which may not be covered under warranty.

- **Do not** use gasoline containing methanol.
- **Do not** store fuel either in the fuel tank or fuel containers over the winter unless a fuel stabilizer is used.
- **Do not** add oil to gasoline.

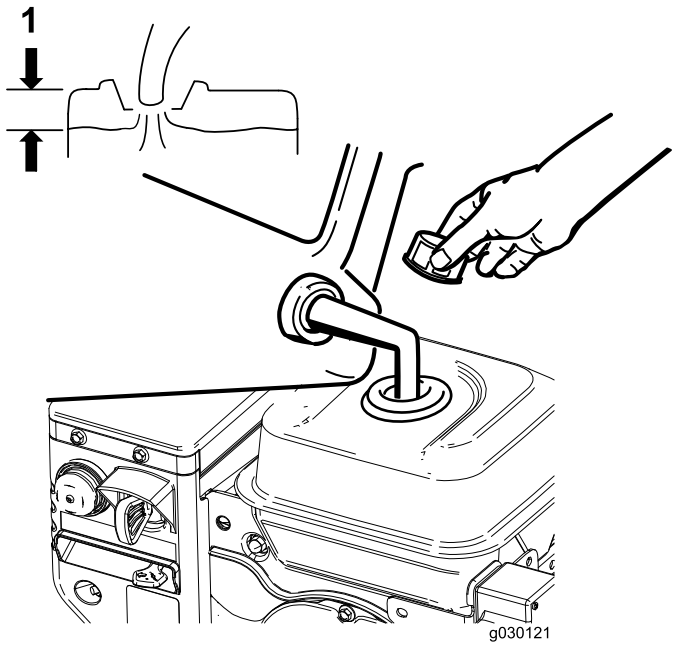

Figure 10

1. Do not fill above the bottom of the fuel tank neck.

Note: For best results, purchase only the quantity of gasoline that you expect to use in 30 days. Otherwise, you may add fuel stabilizer to newly purchased gasoline to keep it fresh for up to 6 months.

Checking the Engine-Oil Level

Refer to 3 Filling the Engine with Oil (page 5).

During Operation

Safety

- **Rotating auger blades can injure fingers or hands.** Stay behind the handles and away from the discharge opening while operating the machine. **Keep your face, hands, feet, and any other part of your body or clothing away from moving or rotating parts.**
- Never direct the discharge toward people or areas where property damage can occur.
- Exercise caution to avoid slipping or falling. Always be sure of your footing, and keep a firm hold on the handles. Walk; never run.
- Exercise extreme caution when operating on slopes.
- Never operate the machine without good visibility or light.
- Look behind and use care when backing up with the machine.
- When not actively clearing snow, disengage power to the rotor blades.
- Use extension cords and receptacles as specified by the manufacturer for all machines with electric starting motors.
- Do not attempt to clear snow from a gravel or crushed rock surface. This product is intended for use only on paved surfaces.
- Do not use the machine on a roof.
- Never attempt to make any adjustments while the engine is running (except when specifically recommended by manufacturer).
- Stay alert for hidden hazards or traffic.
- After striking a foreign object, stop the engine, remove the ignition key, thoroughly inspect the machine for any damage, and repair the damage before restarting and operating the machine.
- If the machine should start to vibrate abnormally, stop the engine and check immediately for the cause.
- Do not run the engine indoors, except when starting the engine and for transporting the machine in or out of the building. Open the outside doors; exhaust fumes are dangerous.
- Do not overload the machine capacity by attempting to clear snow at too fast a rate.
- Never touch a hot engine or muffler.
- Thoroughly inspect the electrical cord before plugging it into a power source. If the cord is damaged, do not use it to start the machine. Replace the damaged cord immediately. Unplug the power cord whenever you are not starting the machine.

Starting the Engine

Note: Fully insert the key to start the engine. The middle position will not start the engine.

Using the Recoil Starter

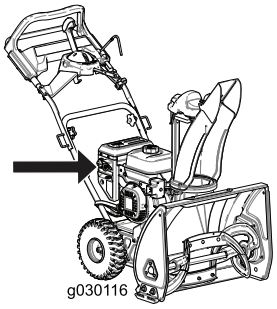

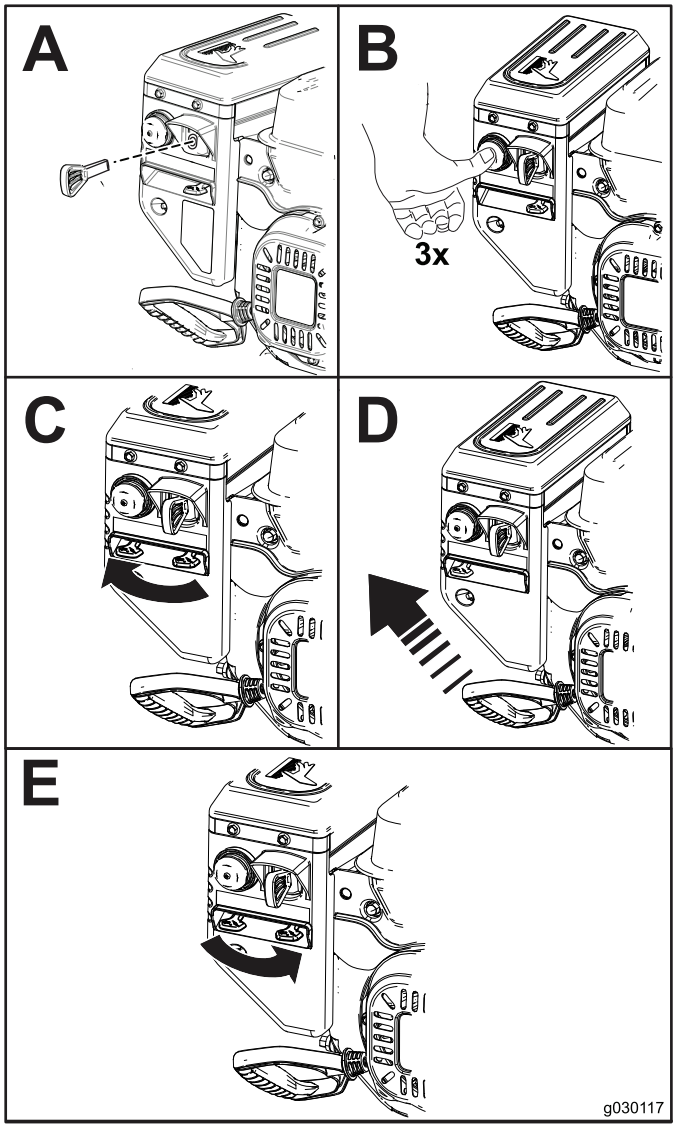

Figure 11

Using the Electric Starter

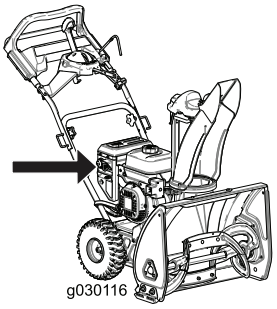

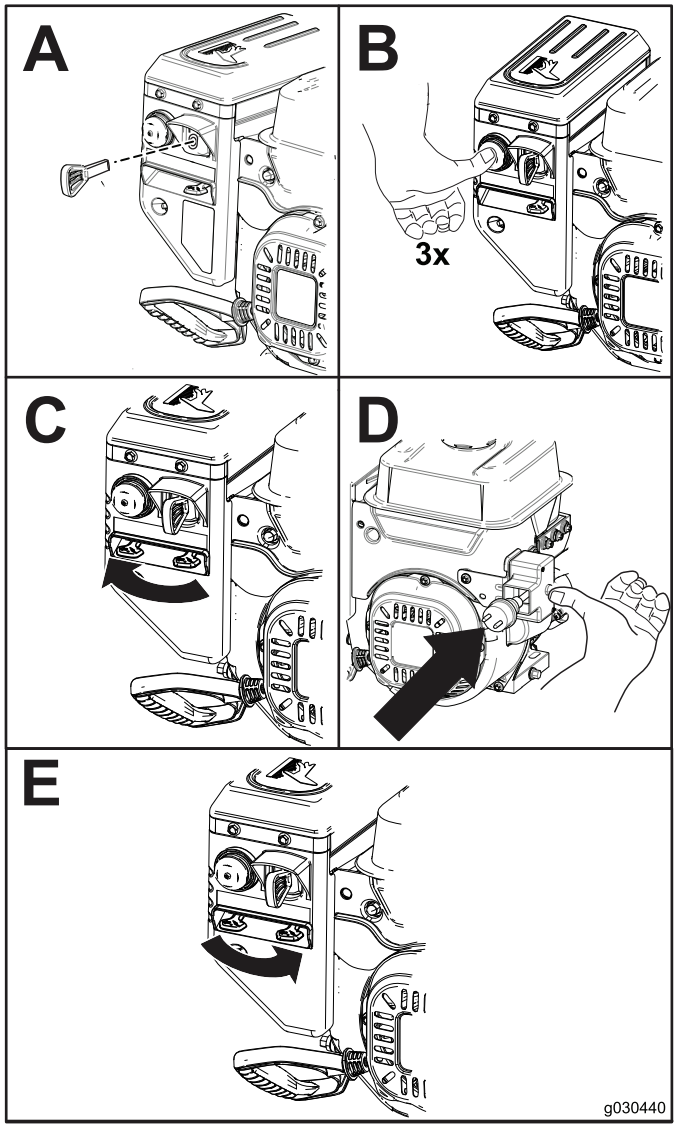

Figure 12

Note: To use the electric starter, connect a power cord to the electric starter plug-in first and then to a power outlet. Use only a UL-listed, 16-gauge extension cord recommended for outdoor use that is not longer than 15 m (50 feet).

Important: To prevent damaging the electric starter, run it in short cycles (5 seconds on, 5 seconds off), no more than 10 times. If the engine still does not start, take the machine to an Authorized Service Dealer for service.

⚠ WARNING

The electrical cord can become damaged, causing a shock or fire.

Thoroughly inspect the electrical cord before using the machine. If the cord is damaged, do not operate the machine. Replace or repair the damaged cord immediately. Contact an Authorized Service Dealer for assistance.

⚠ CAUTION

If you leave the machine plugged into a power source, someone can inadvertently start the machine and injure people or damage property.

Unplug the power cord whenever you are not starting the machine.

Engaging the Auger

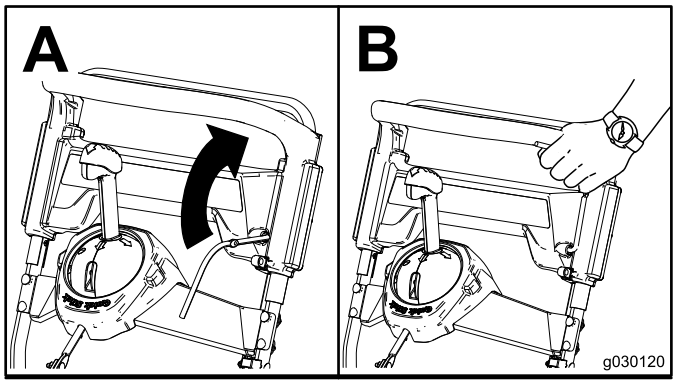

Figure 13

Disengaging the Auger

To disengage the auger, release the auger lever.

Self-propelling the Machine

To operate the self-propel drive, simply walk with your hands on the upper handle and your elbows at your sides, and the machine will automatically keep pace with you (Figure 14).

Note: You can self-propel the machine with the auger engaged or disengaged.

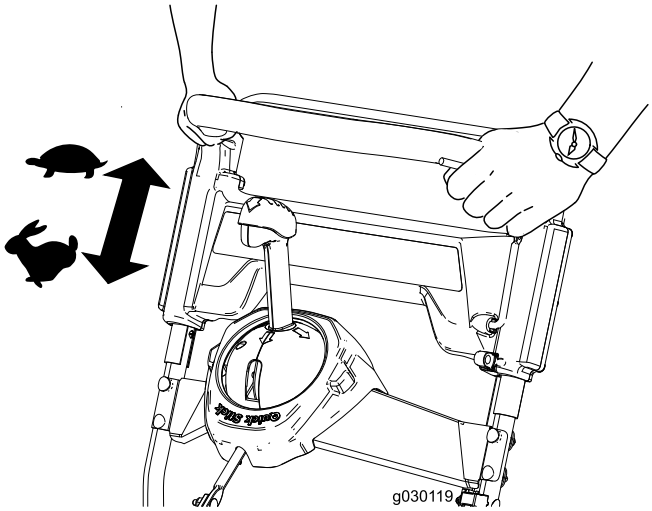

Figure 14

Stopping the Engine

To stop the engine, remove the key from the ignition or move the key to the middle position.

Operating the Quick Stick®

Note: The blue knob must be fully pressed to release the latch and operate the Quick Stick®.

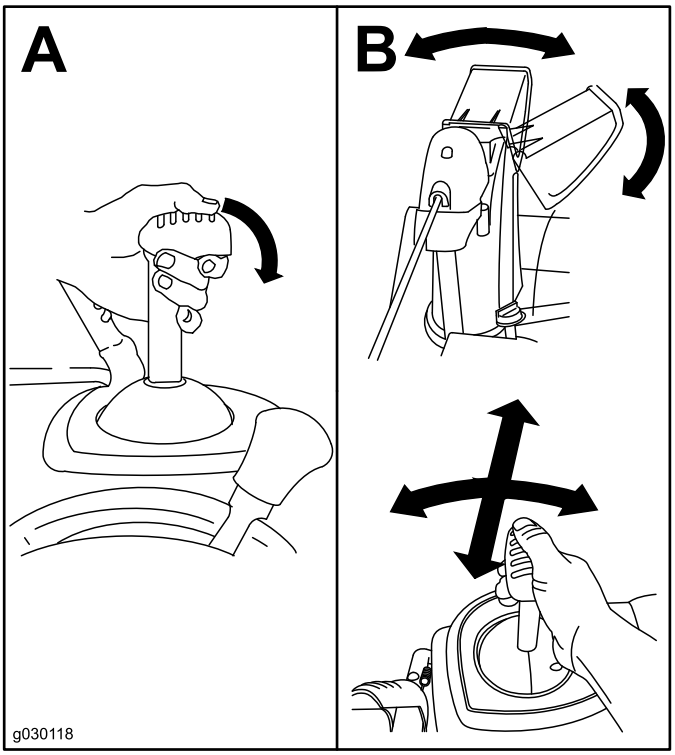

Figure 15

Clearing a Clogged Discharge Chute

Important: Hand contact with the rotating auger inside the discharge chute is the most common cause of injury associated with snowthrowers. Never use your hand to clean out the discharge chute.

1. While remaining in the operating position, release the self-propel handle.
2. Engage the auger.
3. Push down on the handle to raise the front of the machine a few inches (centimeters) off the pavement., then lift the handles quickly to bump the front of the machine onto the pavement.
4. Disengage the auger.
5. Repeat steps 1 through 4, if necessary, until a stream of snow comes out of the discharge chute.

Note: If you cannot unclog the discharge chute by bumping the front of the machine, **stop the engine, wait for all moving parts to stop, and use a snow cleanout tool (not included); never use your hand.**

Important: Unclogging the discharge chute by bumping the front of the machine on the pavement may cause the skids to move. Adjust the skids and tighten the skid bolts securely; refer to **Checking and Adjusting the Skids (page 13)****.**

Operating Tips

⚠ WARNING

The auger can throw stones, toys, and other foreign objects and cause serious personal injury to the operator or to bystanders.

- **Keep the area to be cleared free of all objects that the rotor blades could pick up and throw.**
- **Keep all children and pets away from the area of operation.**
- Remove the snow as soon as possible after it falls.
- If the machine does not propel itself forward on slippery surfaces or in heavy snow, push forward on the handle, but allow the machine to work at its own pace.
- Overlap each swath to ensure complete snow removal.
- Discharge the snow downwind whenever possible.

After Operation

Safety

- Never store the machine with fuel in the fuel tank inside a building where ignition sources are present, such as hot water heaters, space heaters, or clothes dryers. Allow the engine to cool before storing in any enclosure.
- When storing the machine for more than 30 days, refer to the Storage section for important details.

Preventing Freeze-up after Use

- Let the engine run for a few minutes to prevent moving parts from freezing. Stop the engine, wait for all moving parts to stop, and remove ice and snow from the machine.
- Clean off any snow and ice from the base of the chute.
- Rotate the discharge chute left and right to free it from any ice buildup.
- With the ignition key in the Off position, pull the recoil starter handle several times or connect the electrical cord to a power source and the machine and push the electric start button once to prevent the recoil starter and/or the electric starter from freezing up.
- In snowy and cold conditions, some controls and moving parts may freeze. Do not use excessive force when trying to operate frozen controls. If you have difficulty operating any control or part, start the engine and let it run for a few minutes.
- Do not use the chute control to attempt to move a frozen discharge chute. Hold down the blue knob and use your hands to rotate the chute.
- Transporting the machine in an open trailer or vehicle can cause the controls or discharge chute to freeze.

Maintenance

Note: Determine the left and right sides of the machine from the normal operating position.

Recommended Maintenance Schedule(s)

Maintenance Service Interval	Maintenance Procedure
After the first hour	• Check for loose fasteners and tighten them if necessary.
After the first 2 hours	• Change the engine oil. • Inspect the auger cable and adjust it if necessary. • Inspect the transmission cable and adjust it if necessary.
Before each use or daily	• Check the engine oil level and add oil if necessary.
Every 100 hours	• Replace the spark plug.
Yearly	• Check the skids and adjust them if necessary. • Inspect the throwing edges and have an Authorized Service Dealer replace the throwing edges and scraper if necessary. • Change the engine oil. • Inspect the auger cable and adjust it if necessary. • Inspect the transmission cable and adjust it if necessary. • Check the tire pressure. • Check for loose fasteners and tighten them if necessary. • Have an Authorized Service Dealer inspect the drive belt and replace it if necessary.
Yearly or before storage	• Prepare the machine for storage.

Maintenance Safety

Read the following safety precautions before performing any maintenance on the machine:

- Before performing any maintenance, service, or adjustment, stop the engine and remove the key. If major repairs are ever needed, contact an Authorized Service Dealer.
- Check all fasteners at frequent intervals for proper tightness to be sure the machine is in safe working condition.
- Maintain or replace safety and instruction labels, as necessary.
- Do not change the governor settings on the engine.
- Purchase only genuine Toro replacement parts and accessories.

Checking the Engine Oil Level

Service Interval: Before each use or daily

1. Remove the dipstick, wipe it clean, then fully insert the dipstick **without threading it in.**
2. Remove the dipstick and check the oil level.
   - If the oil level is below the Add mark on the dipstick (Figure 16), add oil. Refer to Changing the Engine Oil (page 13).
   - If the oil level above the Full mark (), drain the excess oil until the oil level is at the Full mark on the dipstick; refer to (page).

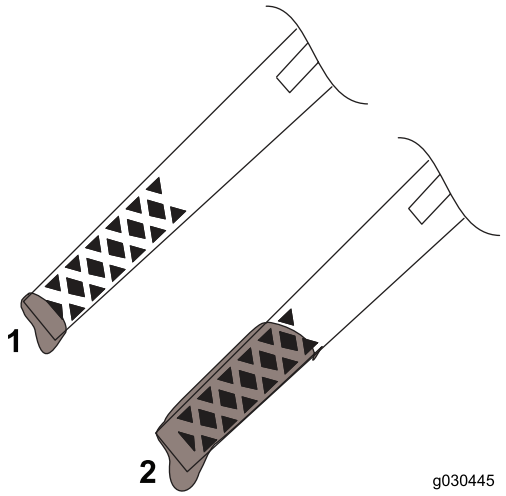

Figure 16

1. Low oil level—add oil
2. Correct oil level

Checking and Adjusting the Skids

Service Interval: Yearly

Check the skids to ensure that the auger does not contact the paved surface. Adjust the skids as needed to compensate for wear (Figure 17).

1. Loosen the skid bolts.
2. Slide a 5 mm (3/16 inch) board underneath the scraper.

   Note: Using a thinner board will result in a more aggressive scraper. A thicker board will result in a less aggressive scraper.
3. Lower the skids to the ground.

   Note: Ensure the skids are flat on the ground.
4. Tighten the skid bolts.

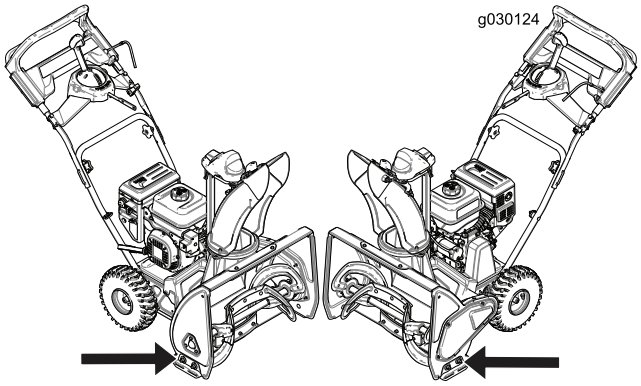

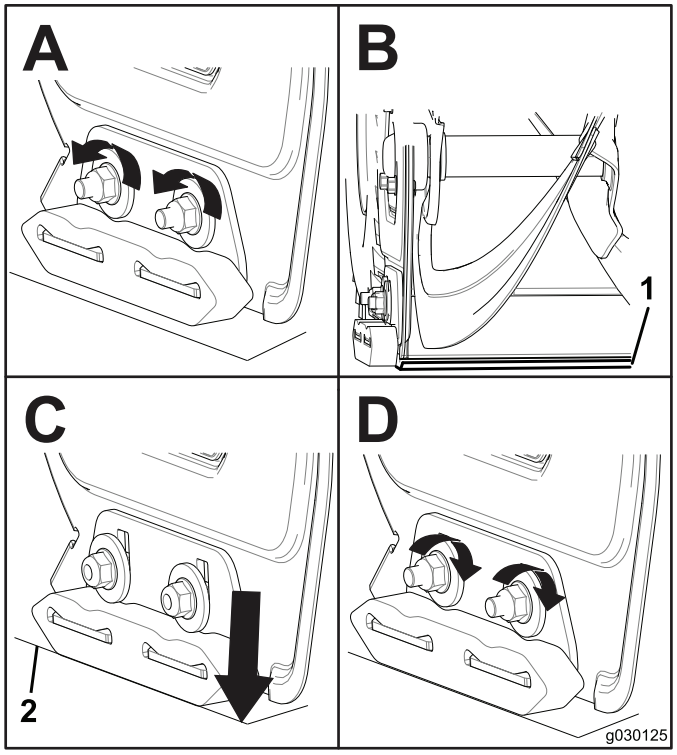

Figure 17

1. 5 mm (3/16 inch) board
2. Ground

Inspecting the Throwing Edges

Service Interval: Yearly—Inspect the throwing edges and have an Authorized Service Dealer replace the throwing edges and scraper if necessary.

Before each session, inspect the throwing edges for wear. When a throwing edge has worn down to the wear indicator hole, have an Authorized Service Dealer replace the throwing edges (Figure 18).

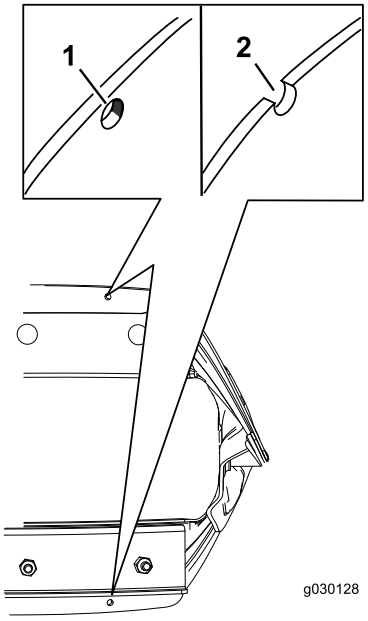

Figure 18

1. The wear indicator hole is intact; you do not need to replace the throwing edges.
2. The wear indicator hole is exposed; replace both throwing edges.

Changing the Engine Oil

Service Interval: After the first 2 hours

Yearly

Run the engine a few minutes before changing the oil to warm it. Warm oil flows better and carries more contaminants.

1. Move the machine to a level surface.
2. Place an oil drain pan under the oil-drain plug, remove the oil-drain plug, and tip the machine backward and drain the used oil in the oil-drain pan (Figure 19).

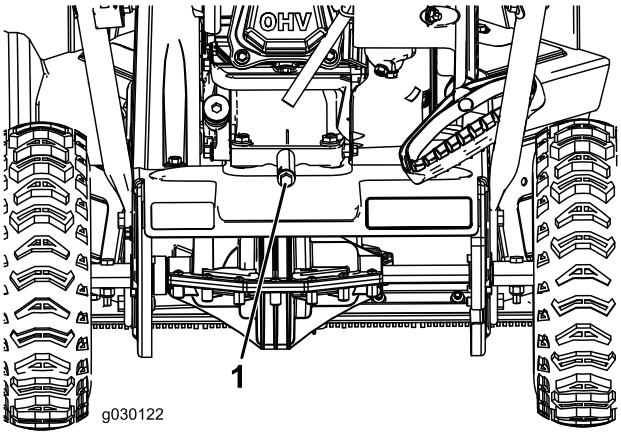

Figure 19

1. Oil-drain plug

3. After draining the used oil, return the machine to the operating position.
4. Install the oil drain plug and tighten it securely.
5. Clean around the oil fill cap.
6. Use Figure 20 below to select the best oil viscosity for the outdoor temperature range expected:

Model	Max fill
38711	0.5 L (16.9 oz)
38712	0.7 L (23.7 oz)

Oil type: automotive detergent oil with an API service classification of SJ, SL, or higher.

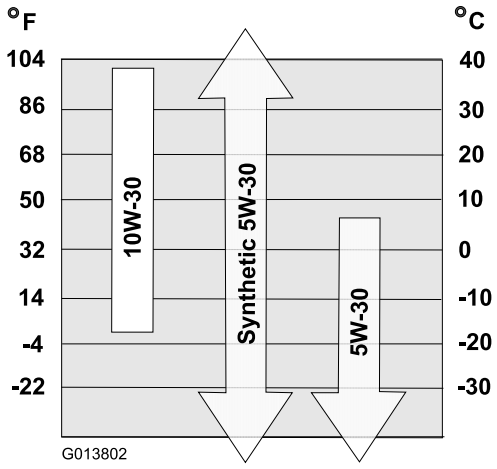

Figure 20

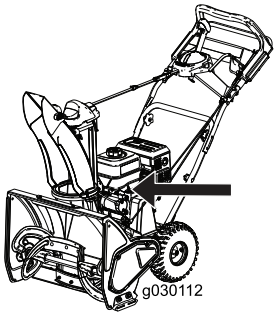

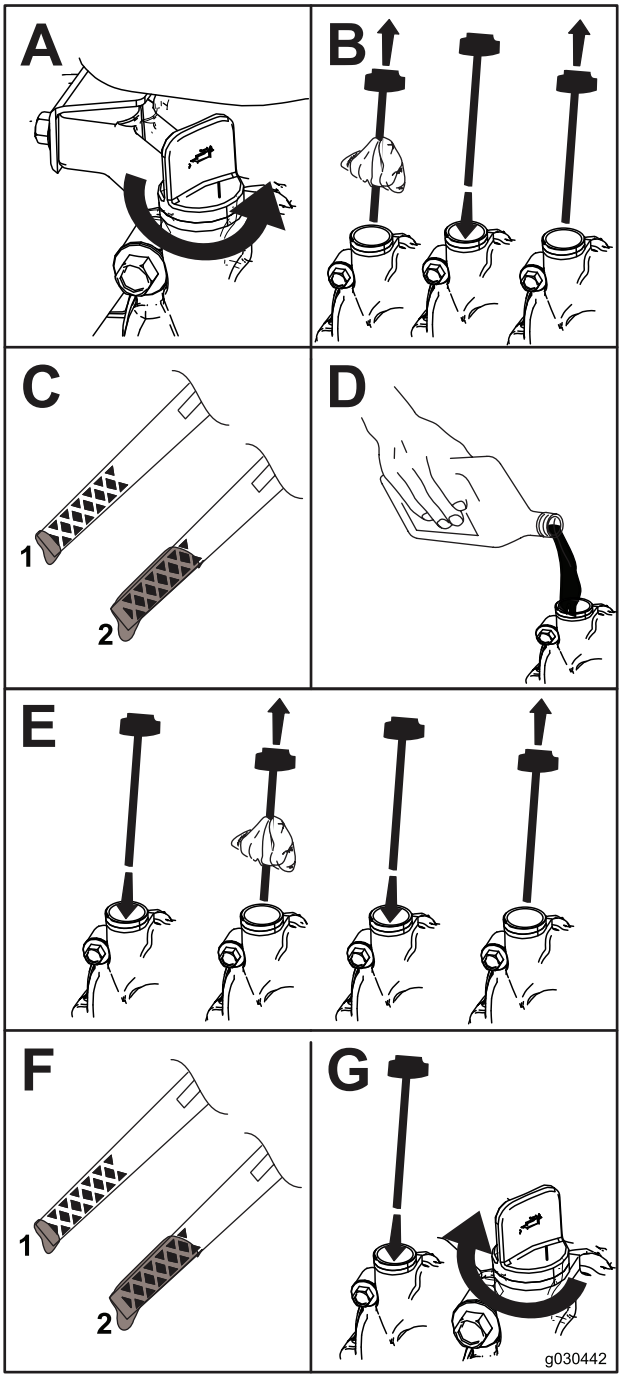

Figure 21

1. Low oil level—add oil
2. Correct oil level

Replacing the Spark Plug

Service Interval: Every 100 hours—Replace the spark plug.

⚠ WARNING

Replacing the spark plug while the engine is hot can result in burns.

Wait until the engine is cool to replace the spark plug.

Use a Toro spark plug or equivalent (Champion® RN9YC or NGK BPR6ES).

1. Remove the boot (Figure 22).

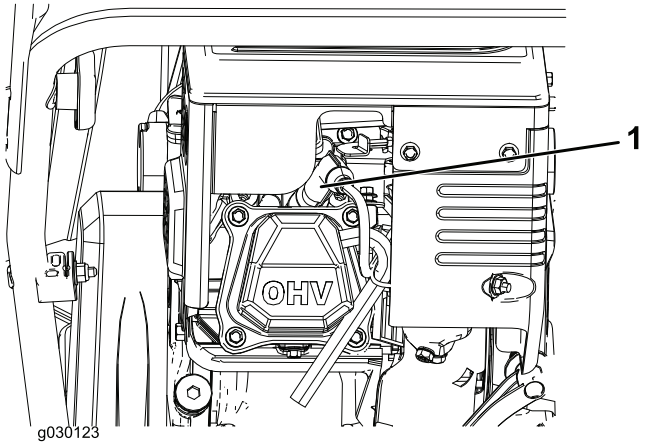

Figure 22

2. Clean around the base of the spark plug.
3. Remove and discard the old spark plug.

   Note: You will need a ratchet wrench extension to remove the spark plug.
4. Set the gap between the electrodes on a new spark plug at 0.76 mm (0.030 inch) (Figure 23).

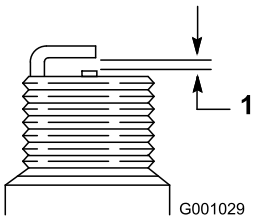

Figure 23

1. 0.76 mm (0.030 inch)

Adjusting the Auger Cable

Service Interval: After the first 2 hours

Yearly

If the drive belt slips or squeals under heavy load, adjust the auger cable.

1. Loosen the nut on the lower cable clamp, but do not remove it (Figure 24).

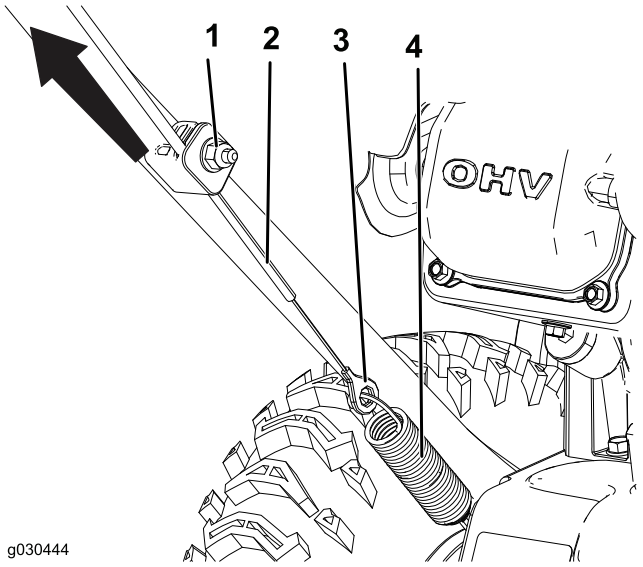

Figure 24

1. Nut
2. Cable
3. Connector
4. Spring

2. Pull the cable up to remove some slack (Figure 24).

   Important: Do not remove all the slack from the cable. Removing all the slack from the cable will prevent the auger from stopping properly.
3. Hold the cable in place and tighten the nut (Figure 24).

Adjusting the Transmission Cable

Service Interval: After the first 2 hours

Yearly

If the wheels easily stall out, or if the wheels drive without engaging the self-propel handle, adjust the transmission cable.

1. Loosen the nut on the upper cable clamp, but do not remove it (Figure 25).

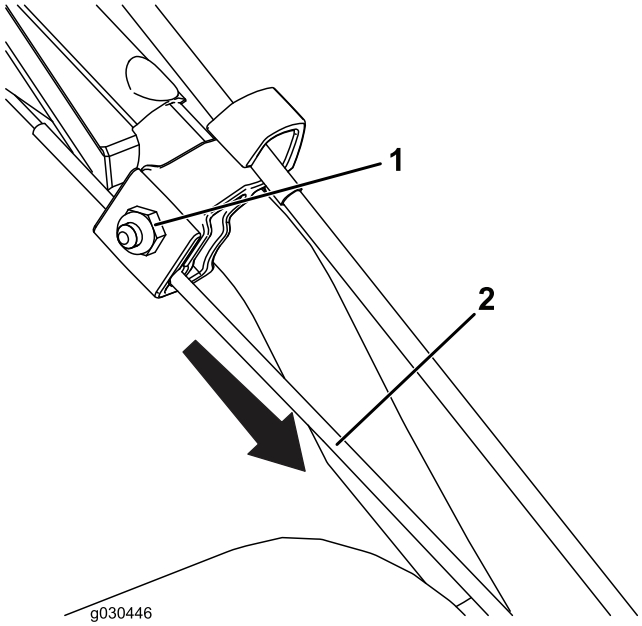

Figure 25

1. Nut
2. Cable

2. Pull the cable down to remove most of the slack in the cable (Figure 25).

   Important: Do not remove all the slack from the cable. Removing all the slack from the cable may cause the wheels to engage without engaging the self-propel handle.

3. Tighten the nut (Figure 25).

Checking the Tire Pressure

Service Interval: Yearly

Set the tire pressure equally in both tires to between 103 and 137 kPa (15 and 20 psi).

Storage

Storing the Snowthrower

⚠ WARNING

- **Gasoline fumes are highly flammable, explosive, and dangerous if inhaled. If you store the machine in an area with an open flame, the gasoline fumes may ignite and cause an explosion.**
- **Do not store the machine in a house (living area), basement, or any other area where ignition sources may be present, such as hot water and space heaters, clothes dryers, furnaces, and other like appliances.**
- **Do not tip the machine backward with fuel in the fuel tank; otherwise, fuel may leak out of the machine.**

1. On the last refueling of the season, add fuel stabilizer to fresh fuel as directed by the engine manufacturer.
2. Run the engine for 10 minutes to distribute the conditioned fuel through the fuel system.
3. Stop the engine, allow it to cool, and siphon the fuel tank or run the engine until it stops.
4. Start the engine and run it until it stops.
5. Choke or prime the engine, start it a third time, and run the engine until it will not start.
6. Drain the fuel in the carburetor through the carburetor drain bolt into an approved gasoline container.
7. Dispose of unused fuel properly. Recycle it according to local codes, or use it in your automobile.
8. While the engine is still warm, change the engine oil. Refer to Changing the Engine Oil (page 13).
9. Remove the spark plug.
10. Squirt 2 teaspoons of oil into the spark plug hole.
11. Install the spark plug by hand and then torque it to 27–30 N-m (20–22 ft-lb).
12. With the ignition key in the Off position, pull the recoil starter slowly to distribute the oil on the inside of the cylinder.
13. Clean the machine.
14. Touch up chipped surfaces with paint available from an Authorized Service Dealer. Sand affected areas before painting, and use a rust preventative to prevent the metal parts from rusting.
15. Tighten any loose fasteners. Repair or replace any damaged parts.

16. Cover the machine and store it in a clean, dry place out of the reach of children. Allow the engine to cool before storing it in any enclosure.

Notes:

International Distributor List

Distributor:	Country:	Phone Number:	Distributor:	Country:	Phone Number:
Agrolanc Kft	Hungary	36 27 539 640	Maquiver S.A.	Colombia	57 1 236 4079
Asian American Industrial (AAI)	Hong Kong	852 2497 7804	Maruyama Mfg. Co. Inc.	Japan	81 3 3252 2285
B-Ray Corporation	Korea	82 32 551 2076	Mountfield a.s.	Czech Republic	420 255 704 220
Brisa Goods LLC	Mexico	1 210 495 2417	Mountfield a.s.	Slovakia	420 255 704 220
Casco Sales Company	Puerto Rico	787 788 8383	Munditol S.A.	Argentina	54 11 4 821 9999
Ceres S.A.	Costa Rica	506 239 1138	Norma Garden	Russia	7 495 411 61 20
CSSC Turf Equipment (pvt) Ltd.	Sri Lanka	94 11 2746100	Oslinger Turf Equipment SA	Ecuador	593 4 239 6970
Cyril Johnston & Co.	Northern Ireland	44 2890 813 121	Oy Hako Ground and Garden Ab	Finland	358 987 00733
Cyril Johnston & Co.	Republic of Ireland	44 2890 813 121	Parkland Products Ltd.	New Zealand	64 3 34 93760
Fat Dragon	China	886 10 80841322	Perfetto	Poland	48 61 8 208 416
Femco S.A.	Guatemala	502 442 3277	Pratoverde SRL.	Italy	39 049 9128 128
FIVEMANS New-Tech Co., Ltd	China	86-10-6381 6136	Prochaska & Cie	Austria	43 1 278 5100
ForGarder OU	Estonia	372 384 6060	RT Cohen 2004 Ltd.	Israel	972 986 17979
G.Y.K. Company Ltd.	Japan	81 726 325 861	Riversa	Spain	34 9 52 83 7500
Geomechaniki of Athens	Greece	30 10 935 0054	Lely Turfcare	Denmark	45 66 109 200
Golf international Turizm	Turkey	90 216 336 5993	Lely (U.K.) Limited	United Kingdom	44 1480 226 800
Hako Ground and Garden	Sweden	46 35 10 0000	Solvert S.A.S.	France	33 1 30 81 77 00
Hako Ground and Garden	Norway	47 22 90 7760	Spypros Stavrinides Limited	Cyprus	357 22 434131
Hayter Limited (U.K.)	United Kingdom	44 1279 723 444	Surge Systems India Limited	India	91 1 292299901
Hydroturf Int. Co Dubai	United Arab Emirates	97 14 347 9479	T-Markt Logistics Ltd.	Hungary	36 26 525 500
Hydroturf Egypt LLC	Egypt	202 519 4308	Toro Australia	Australia	61 3 9580 7355
Irrimac	Portugal	351 21 238 8260	Toro Europe NV	Belgium	32 14 562 960
Irrigation Products Int'l Pvt Ltd.	India	0091 44 2449 4387	Valtech	Morocco	212 5 3766 3636
Jean Heybroek b.v.	Netherlands	31 30 639 4611	Victus Emak	Poland	48 61 823 8369

European Privacy Notice

The Information Toro Collects
Toro Warranty Company (Toro) respects your privacy. In order to process your warranty claim and contact you in the event of a product recall, we ask you to share certain personal information with us, either directly or through your local Toro company or dealer.

The Toro warranty system is hosted on servers located within the United States where privacy law may not provide the same protection as applies in your country.

BY SHARING YOUR PERSONAL INFORMATION WITH US, YOU ARE CONSENTING TO THE PROCESSING OF YOUR PERSONAL INFORMATION AS DESCRIBED IN THIS PRIVACY NOTICE.

The Way Toro Uses Information
Toro may use your personal information to process warranty claims, to contact you in the event of a product recall and for any other purpose which we tell you about. Toro may share your information with Toro's affiliates, dealers or other business partners in connection with any of these activities. We will not sell your personal information to any other company. We reserve the right to disclose personal information in order to comply with applicable laws and with requests by the appropriate authorities, to operate our systems properly or for our own protection or that of other users.

Retention of your Personal Information
We will keep your personal information as long as we need it for the purposes for which it was originally collected or for other legitimate purposes (such as regulatory compliance), or as required by applicable law.

Toro's Commitment to Security of Your Personal Information
We take reasonable precautions in order to protect the security of your personal information. We also take steps to maintain the accuracy and current status of personal information.

Access and Correction of your Personal Information
If you would like to review or correct your personal information, please contact us by email at legal@toro.com.

Australian Consumer Law

Australian customers will find details relating to the Australian Consumer Law either inside the box or at your local Toro Dealer.

The Toro Warranty and The Toro GTS Starting Guarantee

Conditions and Products Covered

The Toro Company and its affiliate, Toro Warranty Company, pursuant to an agreement between them, jointly promise to repair for the original purchaser[1] the Toro Product listed below if defective in materials or workmanship or if the Toro GTS (Guaranteed to Start) engine will not start on the first or second pull, provided the routine maintenance required in the *Operator's Manual* have been performed.

This warranty covers the cost of parts and labor, but you must pay transportation costs.

The following time periods apply from the original date of purchase:

Products	**Warranty Period**
Snowthrowers	
• Single Stage	2 years Residential Use[2] 45 Days Commercial Use
—Engine	2 years GTS Guarantee, Residential Use[2]
• SnowMax	3 years Residential Use[2] 45 Days Commercial Use
—Chute, chute deflector, and lower chute	Lifetime (original owner only)[1]
• Two Stage	3 years Residential Use[2] 45 Days Commercial Use
—Chute, chute deflector and impeller housing cover	Lifetime (original owner only)[1]
Electric Snowthrowers	2 years Residential Use[2] No Warranty for Commercial Use

[1]Original Purchaser means the person who originally purchased the Toro Product.

[2]Residential use means use of the product on the same lot as your home. Use at more than one location is considered commercial use and the commercial use warranty would apply.

Owner Responsibilities

You must maintain your Toro Product by following the maintenance procedures described in the *Operator's Manual*. Such routine maintenance, whether performed by a dealer or by you, is at your expense.

Instructions for Obtaining Warranty Service

If you think that your Toro Product contains a defect in materials or workmanship, follow this procedure:

1. Contact your seller to arrange service of the product. If for any reason it is impossible for you to contact your seller, you may contact any Toro Authorized Distributor to arrange service. See attached Distributor List.
2. Bring the product and your proof of purchase (sales receipt) to the servicing outlet. If for any reason you are dissatisfied with the servicing outlet's analysis or with the assistance provided, contact us at:

   Toro Warranty Company
   Toro Customer Care Department, RLC Division
   8111 Lyndale Avenue South
   Bloomington, MN 55420-1196 USA
   001–952–948–4707

Items and Conditions Not Covered

There is no other express warranty except for special emission system coverage and engine warranty coverage on some products. This express warranty does not cover the following:

- Cost of regular maintenance service or parts, such as filters, fuel, lubricants, oil changes, spark plugs, or brake and clutch adjustments
- Components failing due to normal wear
- Any product or part which has been altered or misused or neglected and requires replacement or repair due to accidents or lack of proper maintenance
- Pickup and delivery charges
- Repairs or attempted repairs by anyone other than an Authorized Toro Service Dealer
- Repairs necessary due to failure to follow recommended fuel procedure (consult *Operator's Manual* for more details)
  - Removing contaminants from the fuel system is not covered
  - Use of old fuel (more than one month old) or fuel which contains more than 10% ethanol or more that 15% MTBE
  - Failure to drain the fuel system prior to any period of non-use over one month
- Repairs or adjustments to correct starting difficulties due to the following:
  - Failure to follow proper maintenance procedures or recommended fuel procedure
- Special operational conditions where starting may require more than two pulls:
  - First time starts after extended period of non-use over three months or seasonal storage
  - Improper starting procedures - if you are having difficulty starting your unit, please check the *Operator's Manual* to ensure that you are using the correct starting procedures. This can save an unnecessary visit to an Authorized Toro Service Dealer.

General Conditions

The purchaser is covered by the national laws of each country. The rights to which the purchaser is entitled with the support of these laws are not restricted by this warranty.