Form No. 3396-416 Rev A

Power Clear® 518 ZR/ZE Snowthrower

Model No. 38472—Serial No. 316000001 and Up

Model No. 38473—Serial No. 316000001 and Up

Operator's Start Guide

Introduction

⚠ WARNING

CALIFORNIA
Proposition 65 Warning

This product contains a chemical or chemicals known to the State of California to cause cancer, birth defects, or reproductive harm.

The engine exhaust from this product contains chemicals known to the State of California to cause cancer, birth defects, or other reproductive harm.

This machine is intended to be used by residential homeowners. It is designed primarily for removing snow from paved surfaces, such as driveways and sidewalks, and other surfaces for traffic on residential or commercial properties. It is not designed for removing materials other than snow, nor is it designed for clearing off gravel surfaces.

This document is intended as a setup and quick start guide only. For complete operating and maintenance information as either an interactive manual or printable PDF go to **WWW.TORO.COM/EN-US/PARTS/PAGES/PARTSLOOKUP.ASPX** and enter your model number. You can access this page by scanning the following QR code:

Figure 1

Whenever you need service, genuine Toro parts, or additional information, contact an Authorized Service Dealer or Toro Customer Service and have the model and serial numbers of your product ready. Figure 2 identifies the location of the model and serial numbers on the product. Write the numbers in the space provided.

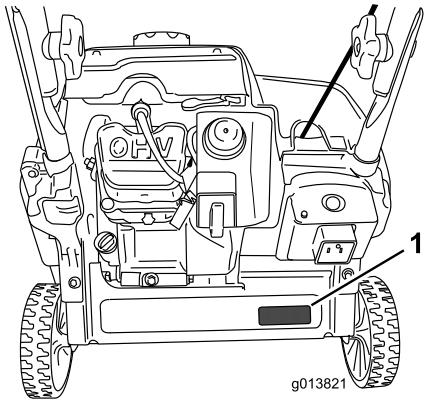

Figure 2

1. Model and serial number location

This manual identifies potential hazards and has safety messages identified by the safety alert symbol (Figure 3), which signals a hazard that may cause serious injury or death if you do not follow the recommended precautions.



Figure 3

1. Safety alert symbol

This *Operator's Start Guide* uses 2 words to highlight information. **Important** calls attention to special mechanical information and **Note** emphasizes general information worthy of special attention.

For models with stated power, the net power of the engine was laboratory rated by the engine manufacturer in accordance with SAE J1940. As configured to meet safety, emission, and operating requirements, the actual engine horsepower on this class of snow thrower will be significantly lower.

© 2014—The Toro® Company
8111 Lyndale Avenue South
Bloomington, MN 55420

Register at www.Toro.com.

Original Instructions (EN)
Printed in the USA
All Rights Reserved

3396-416 A

Contents

Introduction 1
Safety 2
Safety and Instructional Decals 2
Preparing the Machine for First Use 3
Installing the Handle 3
Installing the Discharge Chute 3
Filling the Engine with Oil 4
Adjusting the Control Cable 4
Filling the Fuel Tank 5
Starting the Engine 6
..... 7

Safety

This machine meets or exceeds the B71.3 specifications of the American National Standards Institute in effect at the time of production.

- Read and understand the contents of the operator's start guide before you start the engine. Make sure everyone using this product knows how to use the product and understands the warnings.
- Do not put hands or feet near moving components on the machine.
- Do not operate machine without all guards and other safety protective devices in place and working on the machine.
- Keep clear of any discharge opening. Keep bystanders a safe distance from the machine.
- Keep children out of the operating area and under the watchful care of a responsible adult other than the operator. Never allow children to operate the machine.
- Shut the machine off before unclogging, servicing, or fueling.

Safety and Instructional Decals

Important: Safety and instruction decals are located near areas of potential danger. Replace damaged decals.

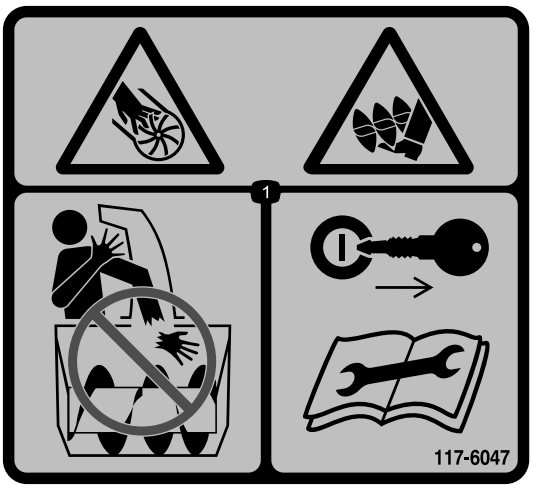

117-6047

1. Cutting dismemberment, impeller and cutting dismemberment, auger hazards—do not place your hand in the chute; remove the ignition key and read the instructions before servicing or performing maintenance.

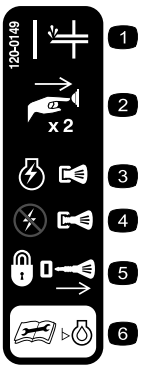

120-0149

1. Primer
2. Push the primer two times to prime the engine.
3. Push key in to switch engine On.
4. Pull key to switch engine switch Off.
5. Remove key to lock machine.
6. Read the *Operator's Manual* before checking engine oil level.



117-7713

1. Warning—read the *Operator's Start Guide* and the *Operator's Manual.*
2. Cutting/dismemberment hazard, impeller—stop the engine before leaving the machine.
3. Thrown object hazard—keep bystanders a safe distance from the machine.
4. Fuel spill hazard—do not tip machine forward or backward.
5. To engage the auger, squeeze the control bar.
6. Release the control bar to disengage the auger.

Preparing the Machine for First Use

Installing the Handle

1. Position the ends of the upper handle on the inside of the lower handle and align the holes.
2. Insert the oval-head bolts into the aligned holes, with the bolt heads on the outside of the handle (Figure 4).

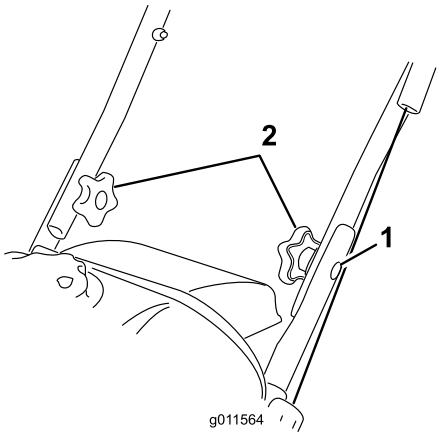

Figure 4

1. Oval-head bolt (2)
2. Curved washers and handle knobs

3. Install the curved washers and the handle knobs on the oval-head bolts on the inside of the handle (Figure 4) and **tighten the knobs securely**.

   Important: Ensure that the cable is routed to the outside of the handle.

Installing the Discharge Chute

Install the discharge chute as shown in Figure 5.

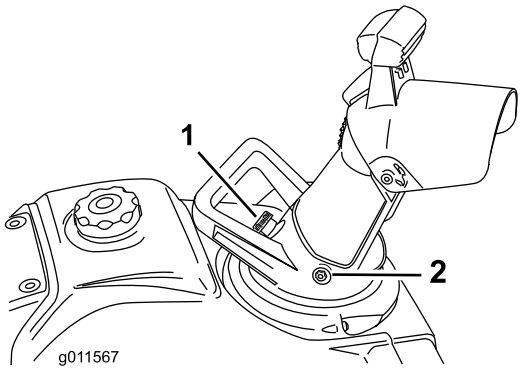

Figure 5

1. Knob
2. Bolt (2), washer (2), and locknut (2)

Note: Install the bolts from the inside of discharge chute so that the washers and locknuts are on the outside of the chute.

Important: Do not overtighten the locknuts.

Filling the Engine with Oil

Your machine does not come with oil in the engine, but it does come with a bottle of oil.

Important: Before starting the engine, fill the engine with oil.

Max fill: 0.35 l (12 oz), type: automotive detergent oil with an API service classification of SJ, SL, or higher.

Use Figure 6 to select the best oil viscosity for the outdoor temperature range expected:

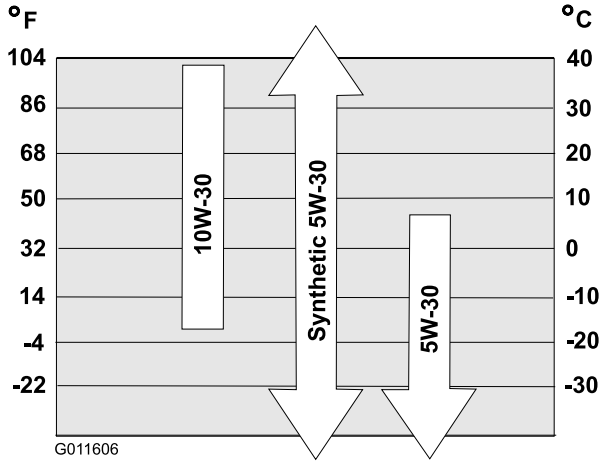

Figure 6

1. Move the machine to a level surface.
2. Clean around the oil-fill cap (Figure 7).
3. Unscrew the oil-fill cap and remove it.
4. **Slowly** pour oil into the oil-fill hole. Wait 3 minutes, then check the oil level on the dipstick by wiping the dipstick clean and then inserting, **but not screwing in,** the oil-fill cap into the hole.

   Note: To determine the proper oil level on the dipstick, refer to Figure 7.

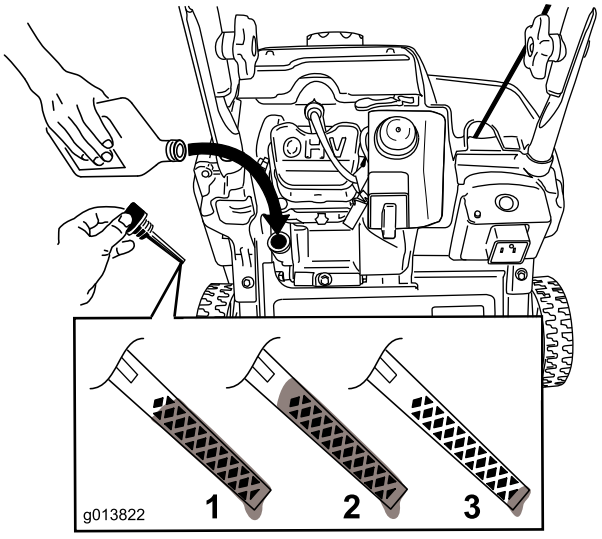

Figure 7

1. The oil level is at its maximum.
2. The oil level is too high—remove oil from the crankcase.
3. The oil level is too low—add oil to the crankcase.

Note: Fill the engine crankcase with oil until the dipstick indicates that the engine oil level is correct as shown in Figure 7. If you overfill the engine with oil, remove the excess oil.

Note: You may tip the machine forward (handle up) a little to make adding oil easier. Remember to return the machine to the operating position before checking the oil level.

Important: Do not tip the machine all the way forward onto its nose, or fuel may leak out of the machine.

5. Screw the oil fill cap into the oil fill hole and hand tighten it securely.

Adjusting the Control Cable

Checking the Control Cable

Service Interval: After the first hour—Check the control cable and adjust it if necessary.

Yearly—Check the control cable and adjust it if necessary.

Important: You must check and may need to adjust the control cable before you operate the machine for the first time.

Move the control bar back toward the handle to remove the slack in the control cable (Figure 8).

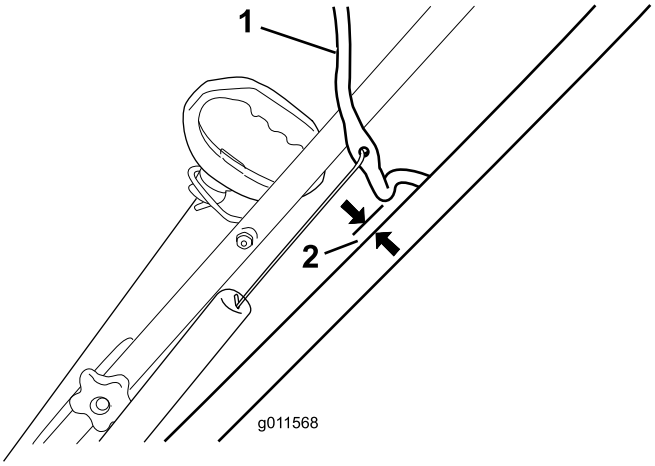

Figure 8

1. Control bar
2. 2 to 3 mm (1/16 to 1/8 inch)

Note: Ensure that a gap of 2 to 3 mm (1/16 to 1/8 inch) exists between the control bar and the handle (Figure 8).

Important: The control cable must contain some slack when you disengage the control bar for the rotor blades to stop properly.

Adjusting the Control Cable

1. Slide up the spring cover and unhook the spring from the adjuster link (Figure 9).

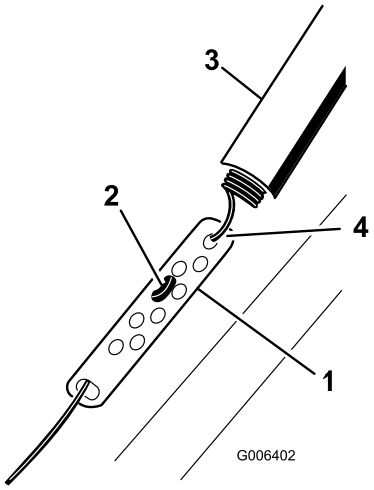

Figure 9

1. Adjuster link
2. Z-fitting
3. Spring cover
4. Unhook the spring here.

Note: You can pull up the adjuster link and cable to make unhooking the spring easier.

2. Move the Z-fitting to a higher or lower hole on the adjuster link as needed to obtain the 2 mm to 3 mm (1/16-inch to 1/8-inch) gap between the control bar and the handle (Figure 9).

Note: Moving the Z-fitting higher decreases the gap between the control bar and the handle; moving it lower increases the gap.

3. Hook the spring to the adjuster link and slide the spring cover over the adjuster link.
4. Check the adjustment; refer to Checking the Control Cable.

Note: The belt may slip (squeal) in wet conditions; to dry out the drive system, start the rotor and run it without a load for 30 seconds.

Filling the Fuel Tank

Note: Determine the left and right sides of the machine from the normal operating position.

⚠ DANGER

Gasoline is extremely flammable and explosive. A fire or explosion from gasoline can burn you and others.

- **To prevent a static charge from igniting the gasoline, place the container and/or machine on the ground before filling, not in a vehicle or on an object.**
- **Fill the tank outdoors when the engine is cold. Wipe up spills.**
- **Do not handle gasoline when smoking or around an open flame or sparks.**
- **Store gasoline in an approved fuel container, out of the reach of children.**
- **Do not tip the machine either forward or backward with fuel in the fuel tank; otherwise, fuel may leak out of the machine.**

- For best results, use only clean, fresh (less than 30 days old), unleaded gasoline with an octane rating of 87 or higher ((R+M)/2 rating method).
- **Ethanol**: Gasoline with up to 10% ethanol (gasohol) or 15% MTBE (methyl tertiary butyl ether) by volume is acceptable. Ethanol and MTBE are not the same. Gasoline with 15% ethanol (E15) by volume is not approved for use. **Never use** gasoline that contains more than 10% ethanol by volume, such as E15 (contains 15% ethanol), E20 (contains 20% ethanol), or E85 (contains 85% ethanol). Using unapproved gasoline may cause performance problems and/or engine damage which may not be covered under warranty.
- **Do not** use gasoline containing methanol.
- **Do not** store fuel either in the fuel tank or fuel containers over the winter unless a fuel stabilizer is used.
- **Do not** add oil to gasoline.

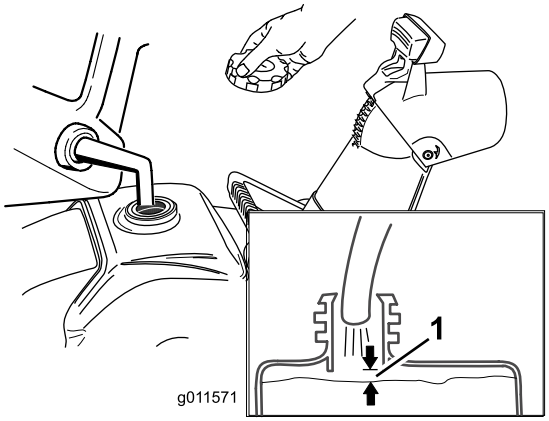

Figure 10

1. 1/2 inch (13 mm)

Note: For best results, purchase only the quantity of gasoline that you expect to use in 30 days. Otherwise, you may add fuel stabilizer to newly purchased gasoline to keep it fresh for up to 6 months.

Starting the Engine

⚠ WARNING

The electrical cord can become damaged, causing a shock or fire.

Thoroughly inspect the electrical cord before plugging it into a power source. If the cord is damaged, do not use it to start the machine. Replace or repair the damaged cord immediately. Contact an Authorized Service Dealer for assistance.

1. Push the ignition key fully inward to the ON position (Figure 11).

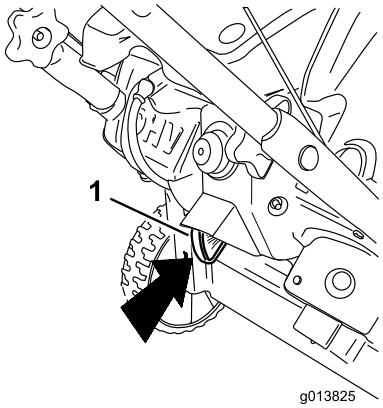

Figure 11

1. Ignition key

2. Move the choke lever fully to the right (Figure 12).

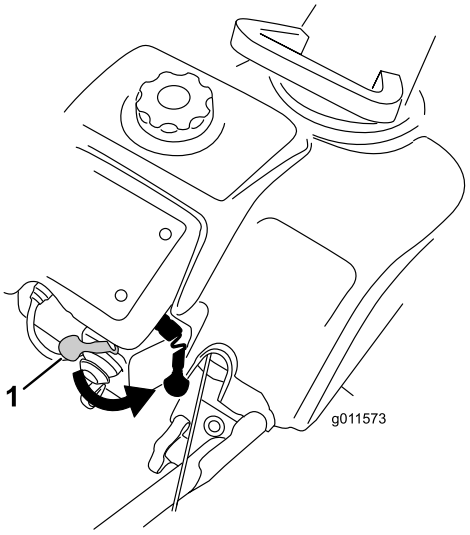

Figure 12

1. Choke lever

3. Firmly push in the primer 2 times with your thumb, holding the primer in for a second before releasing it each time (Figure 13).

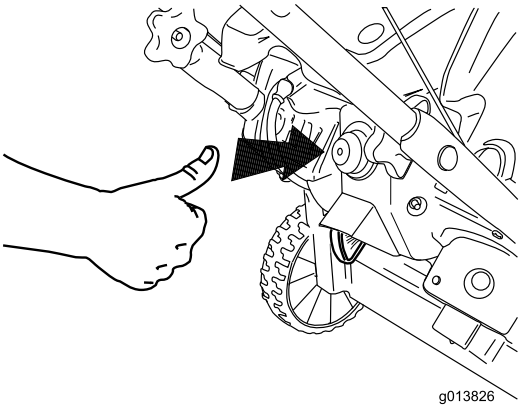

Figure 13

Note: Remove your glove when you push in the primer so that air cannot escape from the primer hole.

Important: Do not use the primer or the choke if the engine has been running and is hot. Excessive priming may flood the engine and prevent it from starting.

4. Connect an extension cord to a power source and the machine, and push the electric-start button (model 38473 only) (Figure 14), or pull the recoil-start handle (Figure 15).

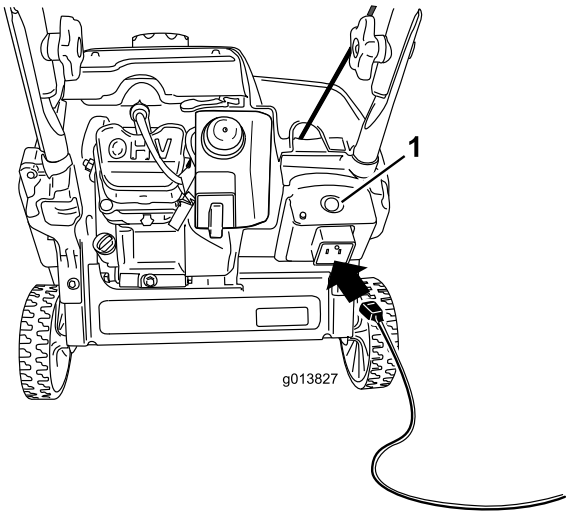

Figure 14

1. Electric-start button

Note: Use only a UL-listed, 16-gauge extension cord recommended for outdoor use that is not longer than 15 m (50 feet).

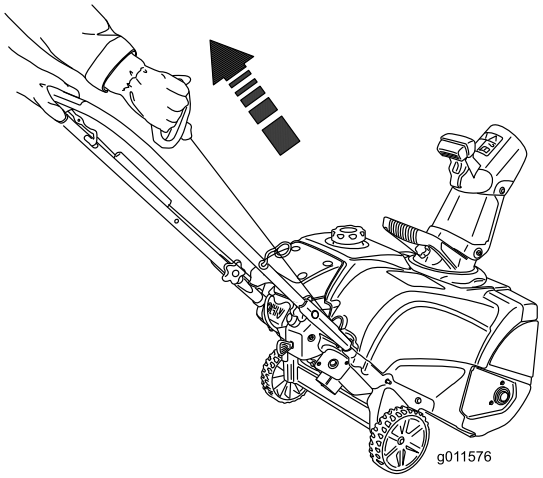

Figure 15

Important: **Run the electric starter no more than 10 times at intervals of 5 seconds on, then 5 seconds off. Running the electric starter extensively can overheat and damage it. If the engine does not start after this series of attempts, wait at least 40 minutes to allow the starter to cool before attempting to start it again. If the engine does not start after the second series of attempts, take the machine to an Authorized Service Dealer for service (Model 38473 only).**

Note: If the recoil starter does not operate properly, it may be frozen. Thaw out the starter before attempting to start the machine.

5. While the engine is running, move the choke lever gradually to the left.
6. Unplug the extension cord from the power source and the machine (Model 38473 only).

⚠ CAUTION

If you leave the machine plugged into a power source, someone can inadvertently start the machine and injure people or damage property (Model 38473 only).

Unplug the power cord whenever you are not starting the machine.

For more information about operation and maintenance, go to *WWW.TORO.COM/EN-US/PARTS/PAGES/PARTSLOOKUP.ASPX*.

Notes:

Notes:

Emission Control Warranty Statement

For the United States, California, and Canada

374-0299

Your Warranty Rights and Obligations

The California Air Resources Board (CARB), the U.S. Environmental Protection Agency (EPA), and The Toro Company, are pleased to explain the emission control system warranty on your 2015–2016 small off-road engine/equipment. In California and the United States, new small off-road engines/equipment must be designed, built, and certified to meet stringent anti-smog standards. The Toro Company warrants the emission control system on your small off-road engine/equipment for the period of time listed below, provided there has been no abuse, neglect, or improper maintenance of your small off-road engine/equipment.

Your emission control system may include parts such as the carburetor, fuel-injection system, the ignition system, catalytic converter, fuel tanks, fuel lines, fuel caps, valves, canisters, filters, vapor hoses, clamps, connectors, and other associated emission-related components.

Where a warrantable condition exists, The Toro Company will repair your small off-road engine/equipment at no cost to you including diagnosis, parts and labor.

Manufacturer's Warranty Coverage

This emission control system is warranted for two years. If any emission-related part on your engine/equipment is defective, the part will be repaired or replaced by The Toro Company.

Owner Responsibilities

As the small off-road engine owner, you are responsible for the performance of the required maintenance listed in your *Operator's Manual*. We recommend that you retain all receipts covering maintenance on your small off-road engine/equipment, but we cannot deny warranty solely for the lack of receipts.

As the small off-road engine/equipment owner, you should however be aware that we may deny you warranty coverage if your small off-road engine/equipment or a part has failed due to abuse, neglect, improper maintenance or unapproved modifications.

You are responsible for presenting your small off-road engine/equipment to a Toro Distribution Center or Service Center as soon as a problem exists. The warranty repairs should be completed in a reasonable amount of time, not to exceed thirty (30) days.

If you have any questions regarding your warranty coverage, contact us at:

Customer Care Department, Consumer Division
Toro Warranty Company
8111 Lyndale Avenue South
Bloomington, MN 55420-1196
1–952–948–4027 (U.S. and Canadian customers)
email Customer Support at: www.toro.com

General Emissions Warranty Coverage

The Toro Company warrants to the ultimate purchaser and each subsequent purchaser that the small off-road engine/equipment is:

- Designed, built, and certified to conform with all applicable emissions regulations; and
- Free from defects in materials and workmanship that could cause the failure of a warranted part; and
- Identical in all material respects to the parts as described in the application for certification.

The warranty period begins on the date the small off-road engine/equipment is delivered to an ultimate purchaser. The warranted period is two years.

Subject to certain conditions and exclusions as stated below, the warranty on evaporative emissions-related parts is as follows:

1. Any warranted part that is not scheduled for replacement as required maintenance in the written instructions supplied, is warranted for the warranty period stated above. If the part fails during the period of warranty coverage, the part will be repaired or replaced by The Toro Company. Any such part repaired or replaced under warranty will be warranted for the remainder of the warranty period.
2. Any warranted part that is scheduled only for regular inspection in the written instructions supplied is warranted for the warranty period stated above. Any such part repaired or replaced under the warranty will be warranted for the remainder of the warranty period.
3. Any warranted part that is scheduled for replacement as required maintenance in the written instructions supplied is warranted for the period of time before the first scheduled replacement date for that part. If the part fails before the first scheduled replacement, the part will be repaired or replaced by The Toro Company. Any such part repaired or replaced under warranty will be warranted for the remainder of the period prior to the first scheduled replacement point for the part.
4. Repair or replacement of any warranted part under the warranty provisions herein must be performed at an Authorized Service Dealer at no charge to the owner.
5. Warranty services or repairs will be provided at all Service Dealers authorized to service the subject engines or equipment.
6. The small off-road engine/equipment owner will not be charged for diagnostic labor that is directly associated with diagnosis of a defective, emission-related warranted part, provided that such diagnostic work is performed at an Authorized Service Dealer.
7. The Toro Company is liable for damages to other engine/equipment components caused by a failure under warranty of any warranted part.
8. Throughout the small off-road engine/equipment warranty period stated above, The Toro Company will maintain a supply of warranted parts sufficient to meet the expected demand for such parts.
9. Manufacturer approved replacement parts may be used in the performance of any warranty maintenance or repairs and must be provided without charge to the owner. Such use will not reduce the warranty obligations of The Toro Company.
10. Add-on or modified parts that are not approved by The Toro Company may not be used. The use of a non-approved add-on or modified parts by the purchaser will be grounds for disallowing a warranty claim. The Toro Company will not be liable to warrant failures of warranted parts caused by the use of an non-approved add-on or modified parts.

Warranted Parts

The following emission warranty parts are covered, to the extent these parts were present on the Toro engine/equipment and/or Toro supplied fuel system:

1. Fuel System Parts
    - Carburetor and internal parts
    - Cold starting enrichment (primer or choke)
    - Fuel pump
    - Fuel line, fittings, and clamps
    - Fuel tank, cap, and tether
    - Carbon canister
2. Air Induction System
    - Air cleaner
    - Intake manifold
    - Crankcase vent and line(s)
    - Purge line and fittings
3. Ignition System
    - Spark plug(s) and wire(s)
    - Magneto ignition system
4. Catalytic Exhaust System
    - Catalytic converter
    - Exhaust manifold
    - Air injector system and valve(s)
5. Miscellaneous Items Used in Emission Control System
    - Valves, switches, and linkages
    - Connectors, fittings, and brackets

The Toro 2-Year GTS Starting Guarantee and The Toro Total Coverage Guarantee

A Two-Year Full Warranty (45 Day Limited Warranty for Commercial Use)

Power Clear
Single-Stage Snowthrowers

The Toro Starting Guarantee

The Toro Company and its affiliate, Toro Warranty Company, pursuant to an agreement between them, jointly guarantee that your Toro GTS (Guaranteed to Start) engine, when used for residential purposes*, will start on the first or second pull for two (2) years from the date of purchase, if you provide the routine maintenance it requires, or we will fix it free of charge. The GTS Starting Guarantee does not apply under commercial use.

This warranty covers the cost of parts and labor, but you must pay transportation costs.

The Toro Total Coverage Guarantee

The Toro Company and its affiliate, Toro Warranty Company, pursuant to an agreement between them, jointly promise to repair the Toro Product listed below if used for residential purposes*, if defective in materials or workmanship or if it stops functioning due to the failure of a component for the period listed below.

This warranty covers the cost of parts and labor, but you must pay transportation costs.

The following time periods apply from the original date of purchase:

Products	Warranty Period
Power Clear Snowthrowers and Attachments	2 years

Limited Warranty for Commercial Use

Gas-powered Toro Products used for commercial, institutional, or rental use, are warranted for 45 days against defects in materials or workmanship. Components failing due to normal wear are not covered by this warranty.

Instructions for Obtaining Warranty Service

If you think that your Toro Product contains a defect in materials or workmanship, follow this procedure:

1. Contact any Authorized Toro Service Dealer to arrange service at their dealership. To locate a dealer convenient to you, access our web site at www.Toro.com. You may also call the numbers listed in item #3 to use the 24-hour Toro Dealer locator system.
2. Bring the product and your proof of purchase (sales receipt) to the Service Dealer. The dealer will diagnose the problem and determine if it is covered under warranty.
3. If for any reason you are dissatisfied with the Service Dealer's analysis or with the assistance provided, contact us at:

   Toro Warranty Company
   Customer Care Department, RLC Division
   8111 Lyndale Avenue South
   Bloomington, MN 55420-1196
   Toll free at 866-336-5205 (U.S. customers)
   Toll free at 866-854-9033 (Canadian customers)

Owner Responsibilities

You must maintain your Toro Product by following the maintenance procedures described in the *Operator's Manual*. Such routine maintenance, whether performed by a dealer or by you, is at your expense.

Items and Conditions Not Covered

There is no other express warranty except for special emission system coverage and engine warranty coverage on some products. This express warranty does not cover the following:

- Cost of regular maintenance or replacement of wear parts, such as rotor blades (paddles), scraper blades, belts, fuel, lubricants, oil changes, spark plugs, light bulbs, cable/linkage or brake adjustments
- Any product or part which has been altered or misused or requires replacement or repair due to accidents or lack of proper maintenance
- Pickup and delivery charges
- Operational misuse, neglect, or accidents
- Repairs or attempted repairs by anyone other than an Authorized Toro Service Dealer
- Repairs necessary due to failure to follow recommended fuel procedure (consult *Operator's Manual* for more details)
  - Removing contaminants from the fuel system is not covered
  - Use of old fuel (more than one month old) or fuel which contains more than 10% ethanol or more that 15% MTBE
  - Failure to drain the fuel system prior to any period of non-use over one month
- Repairs or adjustments to correct starting difficulties due to the following:
  - Failure to follow proper maintenance procedures
  - Snowthrower auger/paddles striking an object
  - Contaminants in the fuel system
  - Improper fuel (consult your *Operator's Manual* if in doubt)
  - Failure to drain the fuel system prior to any period of non-use over one month
- Special operational conditions where starting may require more than two pulls:
  - First time starts after extended period of non-use over three months or seasonal storage
  - Improper starting procedures
  - Starting in -10° F (-23° C) or below temperatures

If you are having difficulty starting your unit, please check the *Operator's Manual* to ensure that you are using the correct starting procedures. This can save an unnecessary visit to a Service Dealer.

General Conditions

All repairs covered by these warranties must be performed by an Authorized Toro Service Dealer using Toro approved replacement parts. Repair by an Authorized Toro Service Dealer is your sole remedy under this warranty.

Neither The Toro Company nor Toro Warranty Company is liable for indirect, incidental, or consequential damages in connection with the use of the Toro Products covered by these warranties, including any cost or expense of providing substitute equipment or service during reasonable periods of malfunction or non-use pending completion of repairs under these warranties.

Some states do not allow exclusions of incidental or consequential damages, so the above exclusions may not apply to you.

This warranty gives you specific legal rights, and you may also have other rights which vary from state to state.

Countries Other than the United States or Canada

Customers who have purchased Toro products exported from the United States or Canada should contact their Toro Distributor (Dealer) to obtain guarantee policies for your country, province, or state. If for any reason you are dissatisfied with your Distributor's service or have difficulty obtaining guarantee information, contact the Toro importer. If all other remedies fail, you may contact us at Toro Warranty Company.

Australian Consumer Law: Australian customers will find details relating to the Australian Consumer Law either inside the box or at your local Toro Dealer.

*Residential purposes means use of the product on the same lot as your home. Use at more than one location, or institutional or rental use, is considered commercial use, and the commercial use warranty would apply.