Form No. 3396-466 Rev A

E-Reels Harness Kit

2011 Greensmaster® 3320 or 3420 TriFlex® Traction Unit

Model No. 132-6967

Installation Instructions

⚠ WARNING

CALIFORNIA
Proposition 65 Warning

This product contains a chemical or chemicals known to the State of California to cause cancer, birth defects, or reproductive harm.

Note: Determine the left and right and front and back sides of the machine from the normal operating position.

Preparing the Machine

1. Park the machine on a level surface, stop the engine, and remove the key from the ignition key switch.
2. Disconnect the negative battery cable from the battery.
3. Disable the reel batteries by pulling apart the battery disconnect at the base of the left side of the ROPS.
4. Remove the flange-head bolts securing the left and right consoles, and remove the consoles (Figure 1).

   Note: Retain the flange-head bolts and the left console. Discard the right console.

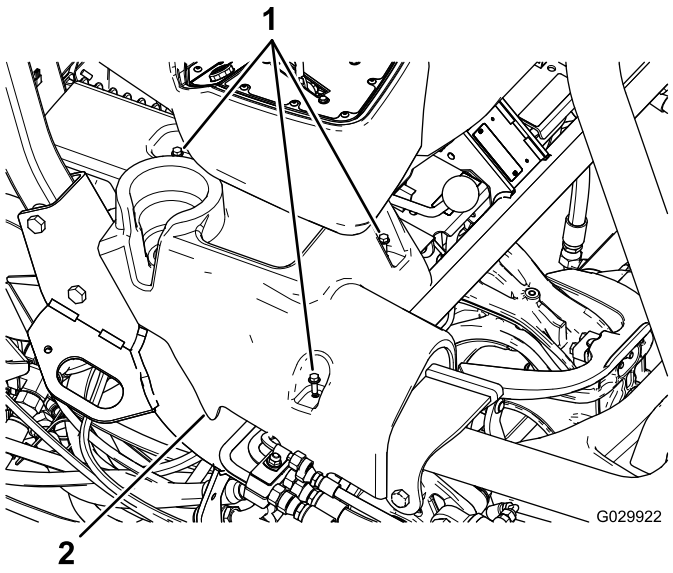

Figure 1
Right console shown

1. Flange-head bolts
2. Right console

5. Tip the seat forward.
6. Remove the ground-terminal connectors (J06 and J08) from the ground block.
7. Cut and remove all the cable ties securing the existing wire harness.

   Important: Do not cut any wires or other components.

8. Remove the mounting bracket that holds the fuse block under the seat (Figure 2).

   Note: Do not remove the fuse block from the bracket.

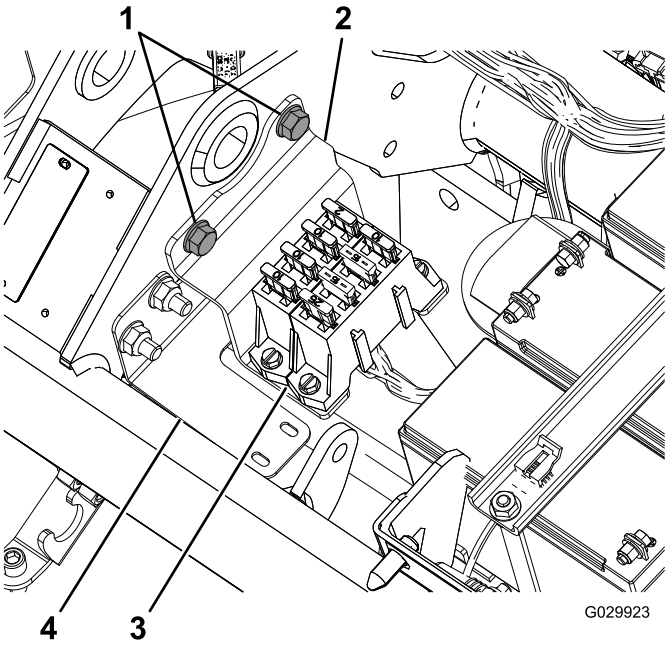

Figure 2

1. Flange bolts
2. Bracket
3. Fuse block
4. Harness bracket

9. Disconnect the harness from the 3 reel motors.

   Note: Each reel motor has 2 connectors.

© 2015—The Toro® Company
8111 Lyndale Avenue South
Bloomington, MN 55420

Register at www.Toro.com.

CE

Original Instructions (EN)
Printed in the USA
All Rights Reserved

3396-466 A

10. Disconnect the plug from the generator, which is located near the engine (Figure 3).

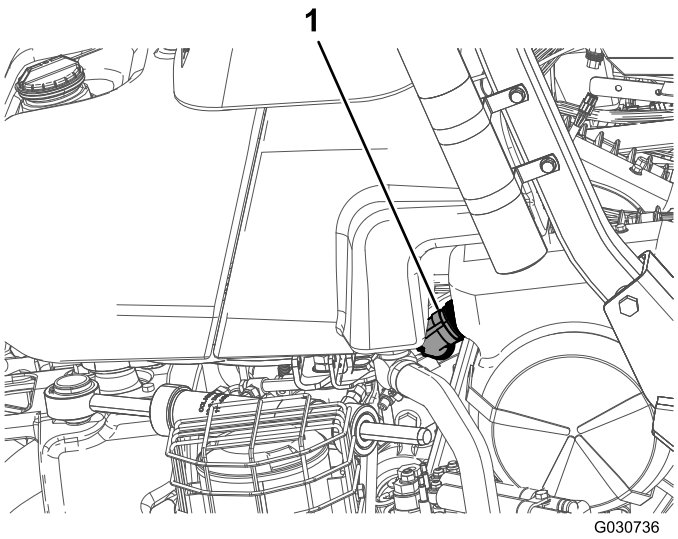

Figure 3

1. Generator plug

11. Disconnect the 2 connectors (the CAN bus interconnect and the interface to the main wire harness) from the main wire harness, which is located under the seat.
12. Disconnect the reel speed switch (P04) under the seat.
13. Disconnect the location-ID module (P08).
14. Disconnect the CAN-interface module (P10).
15. On the front terminal of the contactor (48 VDC), disconnect the wire marked "Battery Side" and the battery-disconnect wire.

    Note: You do not need to connect the battery-disconnect wire to the contactor until you install the new wire harness.
16. Disconnect the 2 main-contactor-coil connectors from the contactor.
17. Remove the switched-side power (J07) from the other end of the contactor.
18. Remove the E-Reels-enable-relay connector.
19. Disconnect the terminal from the fuse (10A, 58 V).
20. Remove and discard the wire harness.

Routing and Connecting the Wire Harness

1. Position the new wire harness so that the extension to the generator can route along the right side of the rear frame and the fuse block has enough slack to mount it to the ROPS bracket.
2. Route the wire harness next to the main wire harness under the seat.
3. Bend the wire harness so that it fits behind the mounting bracket for the fuse block under the seat.

   Note: Follow the profile of the harness bracket; refer to Figure 2.
4. Route the wire harness under the main tube of the frame and in front of the reel batteries (Figure 4).

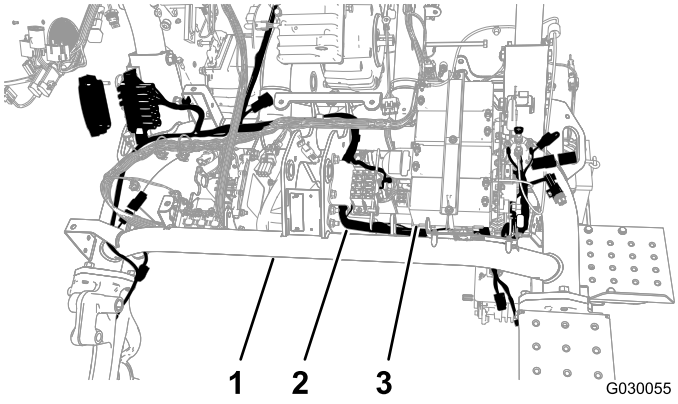

Figure 4

1. Main tube
2. Wire harness
3. Reel batteries

5. Route the new wire harness back under the main tube between the opposite side of the battery plate and the left frame tube (Figure 4).
6. Pull the wire harness through the frame gap.

   Note: There should be enough space to attach the switch side connector while routing under and around the contactor.

7. Secure the wire harness to the harness bracket with the push mount and a cable tie (Figure 5).

   Note: If the old push mount is still in the hole, remove it.

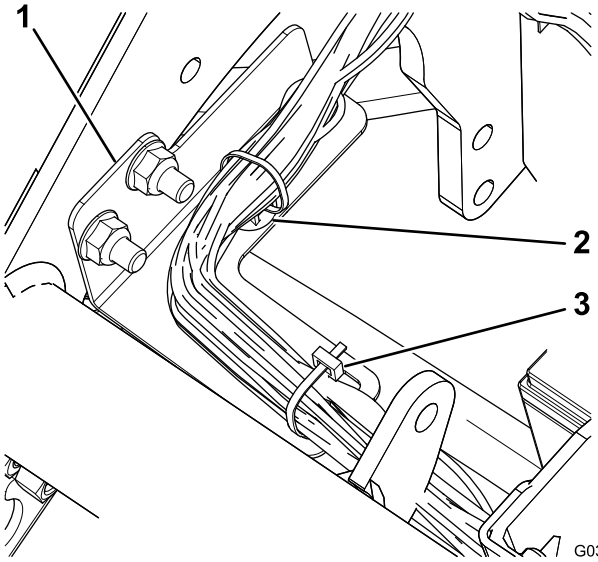

Figure 5

1. Harness bracket
2. Push mount
3. Cable tie

8. Plug the generator interface on the wire harness into the terminal on the generator, near the engine.

   Note: On Model 04530 (gasoline engine), the generator is located in the center of the machine frame (Figure 6); on Model 04540 (diesel engine), the generator is located outside the machine frame (Figure 7).

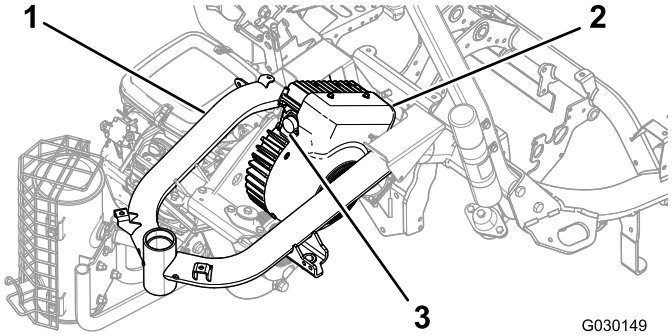

Figure 6
Model 04530

1. Frame
2. Generator
3. Terminal

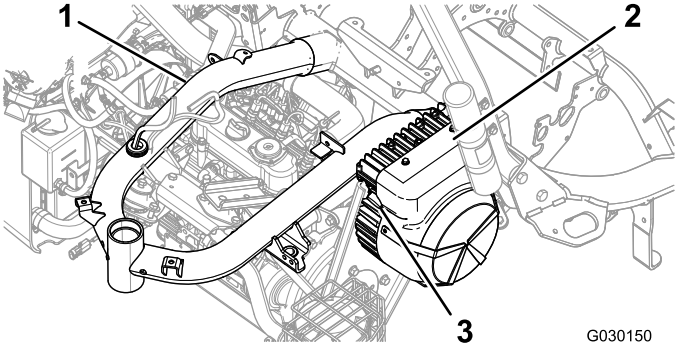

Figure 7
Model 04540

1. Frame
2. Generator
3. Terminal

9. Slowly turn the ring on the generator-interface connector clockwise to align the other connector and secure the connection.

   Important: Ensure that the terminals are fully connected. A loose connection may cause excess heat from the electrical current, leading to product damage.

10. Connect the appropriate terminals to the reel motors (Figure 8).

    Note: Ensure that the connectors click together so that they are secure.

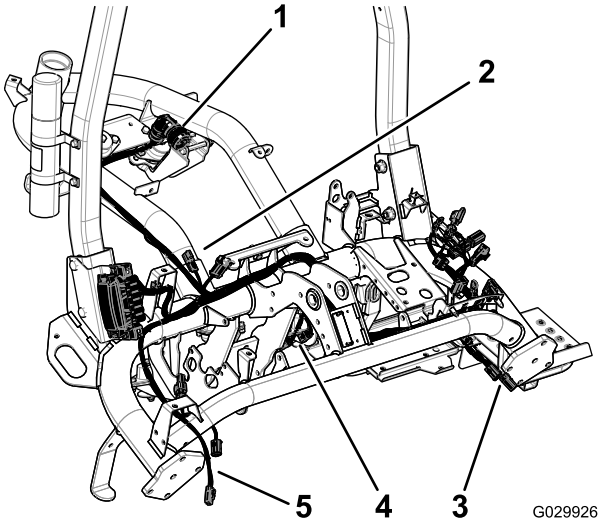

Figure 8

1. Generator plug
2. Terminals to the main wire harness
3. Terminals to reel 2
4. Terminals to reel 1
5. Terminals to reel 3

11. Remove and discard the cap from the fuse (10A, 58 V) as shown in Figure 9.

Note: The fuse has a red wire and a yellow wire

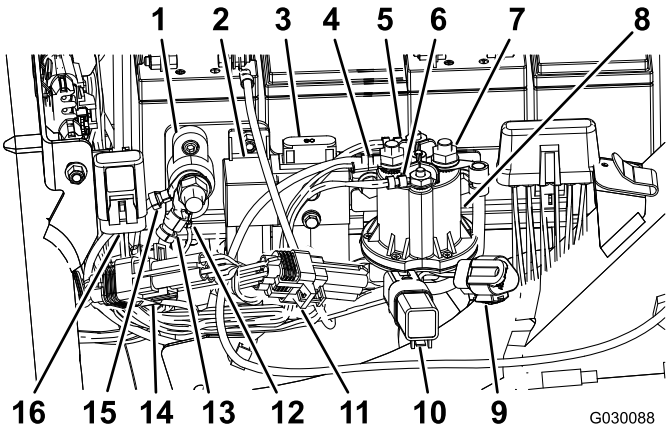

Figure 9

1. Ground block
2. E-reels enable relay
3. E-reels fuse (60A, 58V), existing
4. Battery-side power (boot not shown)
5. Main-contactor-coil connector (white)
6. Main-contactor-coil connector (brown)
7. Switched-side power (boot not shown)
8. Contactor (48 VDC)
9. E-reels-CAN diagnostic port
10. Protection diode
11. ID module
12. Harness ground
13. Harness ground
14. CAN-interface module
15. E-reels batteries ground
16. Fuse (10A, 58V)

12. Insert the terminal with the fuse (10A, 58V) into the existing cap mounted on the frame of the machine (Figure 9).
13. Connect the E-Reels enable relay connector (P07) as shown in Figure 9.
14. Connect the 90-degree switched side (J07) connector on the wire harness to the rear terminal on the contactor (48 VDC), and secure it to the terminal (Figure 9).
15. Route the wire under the flange on the contactor (48 VCD).
16. Connect the 2 main-contactor-coil connectors to the contactor (48 VDC) as shown in Figure 9.
17. Connect the wire marked "Battery Side" and the battery-disconnect wire to the front terminal of the contactor (48 VDC) as shown in Figure 9.
18. Slide the insulator boots for the switched-side power connector and the battery-side connector over the terminals to cover them.
19. Connect the ID module (P08) as shown in Figure 9.
20. Connect the CAN-interface module (P10) as shown in Figure 9.
21. Connect the reel-speed switch (P04) under the seat.
22. Connect the 2 terminals (CAN-bus interconnect and interface to main wire harness) on the new wire harness with the 2 terminals on the main wire harness under the seat.
23. Install the fuse block (Figure 10).

Note: Route the wire harness behind the bracket.

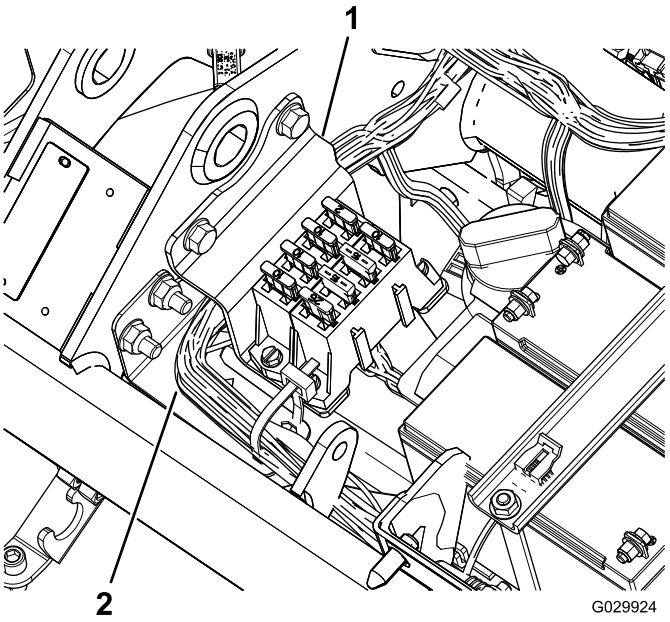

Figure 10

1. Bracket
2. Wire harness

24. Connect the ground-terminal connectors (J06 and J08) to the ground block (Figure 9).
25. Use cable ties to secure the wires to the main wire harness and to the machine frame.

Important: Ensure that the wires are away from moving parts.

26. Secure the wire harness to the machine frame behind and in front of the fuel-tank bracket.
27. Use cable ties to secure the new wire harness.

Important: Ensure that the seat assembly does not crush the wires.

Installing the Fuse-Block Bracket

1. Loosen the 2 nuts and bolts securing the right side of the ROPS to the frame of the machine (Figure 11).

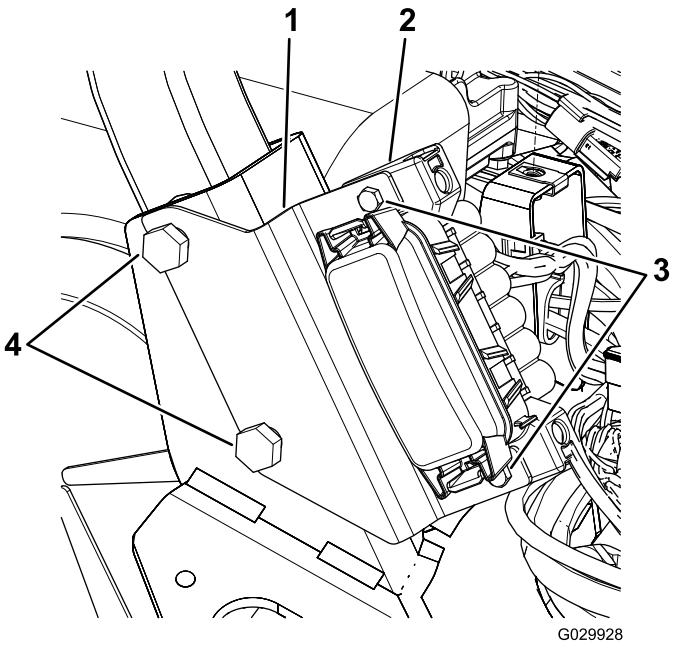

Figure 11

1. Bracket
2. Fuse block
3. Screws
4. ROPS bolts

2. Align the slots in the fuse-block bracket with the bolts as shown in Figure 11.
3. Torque the ROPS fasteners to 136 to 149 N-m (100 to 110 ft-lb).
4. Use the 2 screws to secure the fuse block to the bracket (Figure 11).

Installing the Side Consoles

1. Align the bolt holes in the new right console with the bolt holes on the machine (Figure 12).

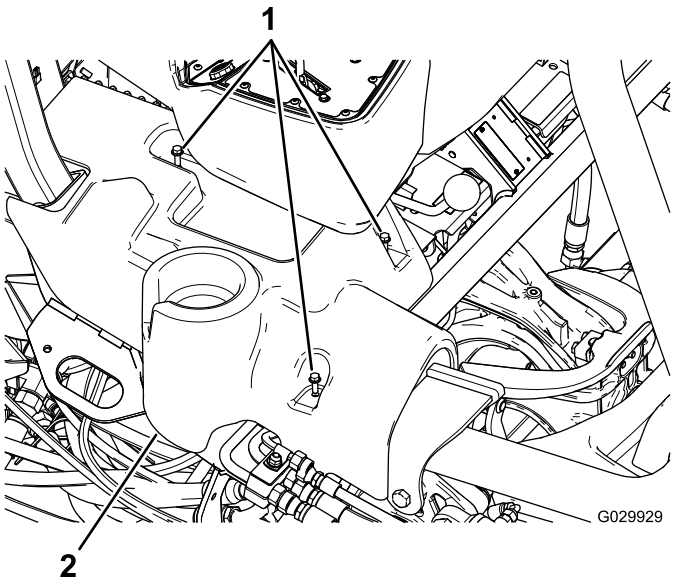

Figure 12
Right console shown

1. Flange-head bolts
2. Right console

2. Align the bolt holes in the existing left console with the bolt holes on the machine.
3. Secure the side consoles with the existing flange-head bolts.

Notes:

Notes:



Count on it.