Form No. 3396-526 Rev A

TORO®

Count on it.

Operator's Manual

52in Side Discharge Mower

Groundsmaster® 200, 3320 and 3280-D Series Traction Unit

Model No. 30555—Serial No. 315000001 and Up

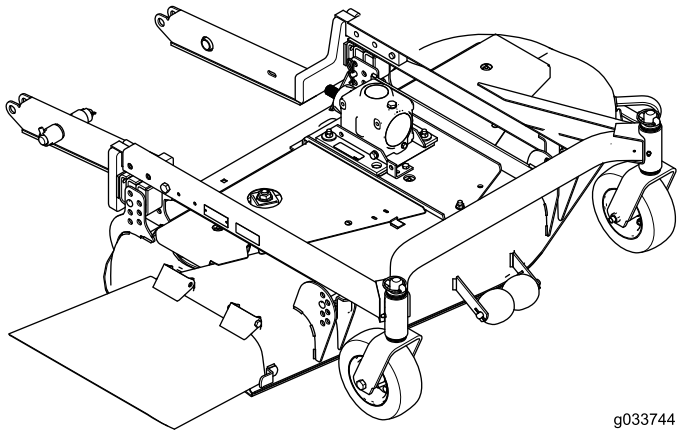

g033744

Register at www.Toro.com.
Original Instructions (EN)

3396-526 A

⚠ WARNING

CALIFORNIA
Proposition 65 Warning

This product contains a chemical or chemicals known to the State of California to cause cancer, birth defects, or reproductive harm.

Introduction

This rotary-blade lawn mower deck is mounted to a ride-on machine and is intended to be used by professional, hired operators in commercial applications. It is primarily designed for mowing grass on well-maintained lawns in parks, sports fields, and on commercial grounds. It is not designed for mowing brush, grass and other growth alongside highways, or for agricultural uses.

Read this information carefully to learn how to operate and maintain your product properly and to avoid injury and product damage. You are responsible for operating the product properly and safely.

You may contact Toro directly at www.Toro.com for product and accessory information, help finding a dealer, or to register your product.

Whenever you need service, genuine Toro parts, or additional information, contact your Toro dealer and have the model and serial numbers of your product ready. The model and serial numbers are stamped into a plate located on the carrier frame behind the right front castor wheel. Write the numbers in the space provided.

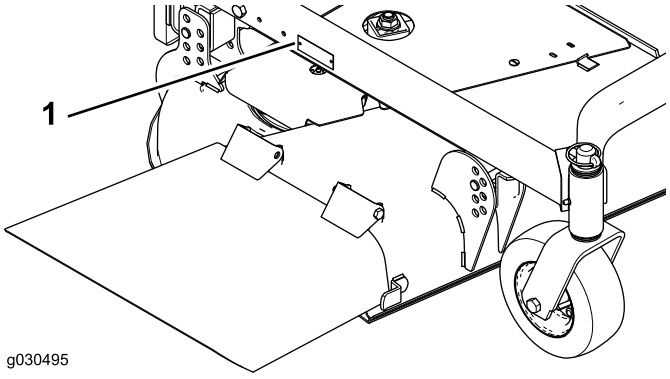

Figure 1

1. Model and serial number location

Model No. _____

Serial No. _____

This manual identifies potential hazards and has safety messages identified by the safety-alert symbol (Figure 2), which signals a hazard that may cause serious injury or death if you do not follow the recommended precautions.



Figure 2

1. Safety-alert symbol

This manual uses 2 words to highlight information. **Important** calls attention to special mechanical information and **Note** emphasizes general information worthy of special attention.

Contents

Safety 3
Safe Operating Practices 3
Toro Mower Safety 3
Safety and Instructional Decals 4
Setup 6
1 Preparing the Machine 6
2 Installing the Carrier Frame 7
3 Installing the Mower Deck 10
4 Installing Rear Weight 13
Product Overview 13
Specifications 13
Attachments/Accessories 13
Operation 14
Adjusting the Height of Cut 14
Adjusting the Rollers 14
Checking the Gearbox Lubricant 15
Adjusting Weight Transfer 15
Using the Grass Deflector 15
Maintenance 16
Lubricating the Castors 16
Lubricating the Mower Deck 16
Removing the Mower Deck 17
Servicing the Caster Arms 18
Servicing the Caster Wheel 18
Checking for a Bent Blade 19
Removing the Cutting Blade 19
Inspecting and Sharpening the Blade 20
Checking and Correcting Mismatch of Blades 20
Replacing the Grass Deflector 21
Adjusting the Idler Pulley 22
Replacing the Drive Belt 23
Troubleshooting 24

© 2015—The Toro® Company
8111 Lyndale Avenue South
Bloomington, MN 55420

Contact us at www.Toro.com.
Printed in the USA
All Rights Reserved

Safety

Improper use or maintenance by the operator or owner can result in injury. To reduce the potential for injury, comply with these safety instructions and always pay attention to the safety-alert symbol, which means Caution, Warning, or Danger—personal safety instruction. Failure to comply with the instruction may result in personal injury or death.

Safe Operating Practices

The following instructions are adapted from ANSI B71.4-2012.

Training

- Read the *Operator's Manual* and other training material. If the operator(s) or mechanic(s) cannot read English it is the owner's responsibility to explain this material to them.
- Become familiar with the safe operation of the equipment, operator controls, and safety signs.
- All operators and mechanics should be trained. The owner is responsible for training the users.
- Never let children or untrained people operate or service the equipment. Local regulations may restrict the age of the operator.
- The owner/user can prevent and is responsible for accidents or injuries occurring to people or damage to property.

Toro Mower Safety

The following list contains safety information specific to Toro products or other safety information that you must know that is not included in the CEN, ISO, or ANSI standard.

This product is capable of amputating hands and feet and throwing objects. Always follow all safety instructions to avoid serious injury or death.

Use of this product for purposes other than its intended use could prove dangerous to user and bystanders.

- Know how to stop the engine quickly.
- Wearing safety shoes and long pants is advisable and required by some local ordinances and insurance regulations.
- Handle fuel carefully. Wipe up any spills.
- Check the safety interlock switches daily for proper operation. If a switch should fail, replace the switch before operating the machine.
- Using the machine demands attention. To prevent loss of control:
  - Do not drive close to sand traps, ditches, creeks, embankments, or other hazards.
  - Avoid sudden starts and stops.
  - Yield the right of way when near or crossing roads.
  - Lower the mower deck when going down slopes.
- The grass deflector must always be installed and in the lowest position on the side discharge mower deck. Never operate the mower without the deflector or entire grass collector.
- If the mower deck discharge area ever plugs, shut the engine off before removing the obstruction.
- Cut grass slopes carefully. Do not start, stop, or turn suddenly.
- Do not touch the engine or muffler while the engine is running or soon after it has stopped because these areas could be hot enough to cause burns.

Maintenance and Storage

- Check the blade mounting bolts frequently to ensure that they are tightened to specification.
- Perform only those maintenance instructions described in this manual. If major repairs are ever needed or if assistance is desired, contact your Toro Distributor.

Safety and Instructional Decals

Safety decals and instructions are easily visible to the operator and are located near any area of potential danger. Replace any decal that is damaged or lost.

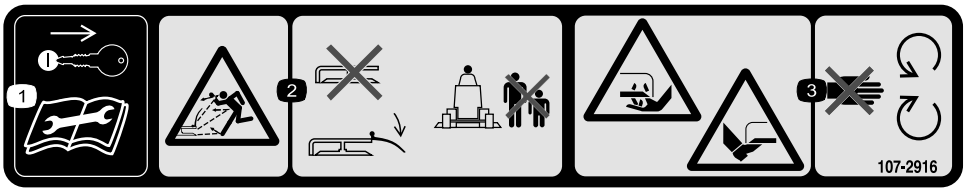

107-2916

1. Remove the ignition key and read the *Operator's Manual* before servicing or performing maintenance.
2. Thrown object hazard—do not operate the mower with the deflector up or removed, keep the deflector in place; keep bystanders a safe distance from the machine.
3. Cutting/dismemberment hazard of hand or foot, mower blade—stay away from moving parts.

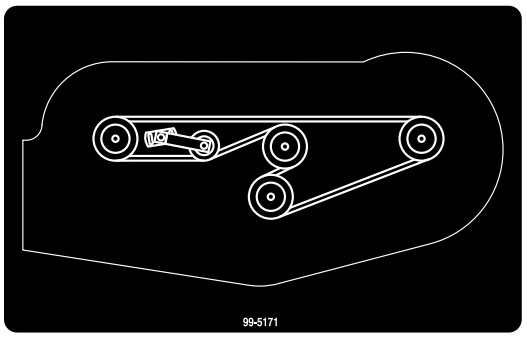

99-5171

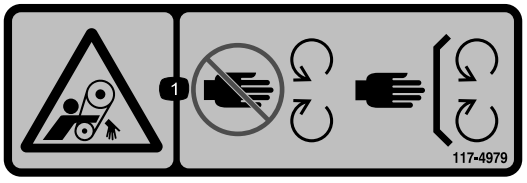

117–4979

1. Entanglement hazard, belt—stay away from moving parts, keep all guards and shields in place.



93-6697

1. Read the *Operator's Manual*.
2. Add SAE 80w-90 (API GL-5) oil every 50 hours.

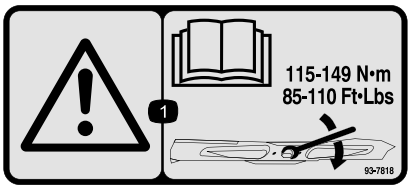

93-7818

1. Warning—read the *Operator's Manual* for instructions on torquing the blade bolt/nut to 115 to 149 N·m (85 to 110 ft-lb).

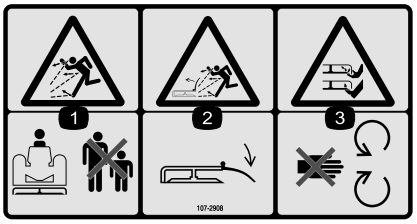

107-2908

1. Thrown object hazard—keep bystanders a safe distance from the machine.
2. Thrown object hazard—do not operate the mower with the deflector up or removed, keep the deflector in place.
3. Cutting/dismemberment hazard of hand or foot, mower blade—stay away from moving parts.

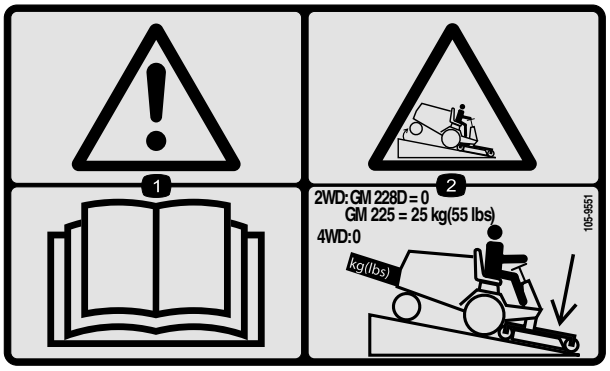

105–9551

1. Warning—read the *Operator's Manual.*
2. Lower the mower deck when traveling down slopes. GM225 unites require 25 kg (55 lb) of rear weight. GM228D and 4 wheel drive units do not require rear weight.

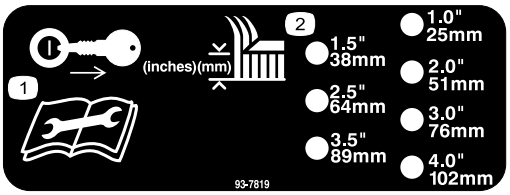

93–7819

1. Remove the ignition key and read the instructions before servicing or performing maintenance.
2. Height of cut



107-2915

1. Entanglement hazard, shaft—keep bystanders a safe distance from the machine.

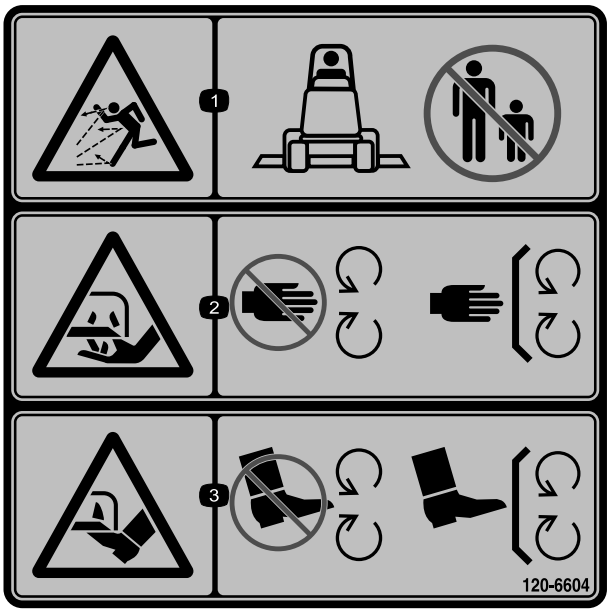

120-6604

1. Thrown object hazard—keep bystanders away from the machine.
2. Cutting/dismemberment hazard of hand, mower blade—stay away from moving parts, keep all guards and shields in place.
3. Cutting/dismemberment hazard of foot, mower blade—stay away from moving parts, keep all guards and shields in place.

Setup

Loose Parts

Use the chart below to verify that all parts have been shipped.

Procedure	Description	Qty.	Use
1	No parts required	–	Prepare the machine before installation.
2	Carrier frame Right lift arm Left lift arm Bolt (1/2 x 1-1/2 inches) Spacer Pivot pin Cotter pin (5/32 x 1-3/4 inches) Caster fork Caster wheel Spanner Bolt (1/2 x 5 inches) Flat washer Locknut (1/2 inch) Thrust washer Lynch pin Rear cradle Cradle spacer Bolt (3/8 x 2 inches) Flange nut (3/8 inch) Cushion Cushion spacer Screw (#10 x 1 inch) Locknut (#10)	1 1 1 2 4 2 2 2 2 2 2 4 2 8 2 2 2 6 6 2 2 4 4	Install the carrier frame.
3	Mower deck Clevis pin Hairpin	1 4 4	Install the mower deck.
4	No parts required	–	Install rear weight.

⚠ DANGER

If you start the engine and allow the PTO shaft to rotate, serious injury could result.

Do not start the engine and engage the PTO lever when the PTO shaft is not connected to the gearbox on the mower deck.

Note: Determine the left and right sides of the machine from the normal operating position.

Important: The weight transfer kit must be installed to a Groundsmaster 200 Series traction unit when installing the 52 inch deck.

1

Preparing the Machine

No Parts Required

Procedure

1. Move the machine onto a level surface, engage the parking brake, put the traction pedal into the NEUTRAL position, the PTO lever into the OFF position, shut off the engine, and remove the key from the ignition.

2. Chock the rear wheels to prevent the machine from moving during the installation.
3. Loosen the wheel nuts that secure the front wheels to the machine.
4. Use jacks to raise the front wheels off the floor.
5. Support the machine with jack stands or blocking.
6. Remove the lug nuts and the front wheels from the machine.

2

Installing the Carrier Frame

Parts needed for this procedure:

1	Carrier frame
1	Right lift arm
1	Left lift arm
2	Bolt (1/2 x 1-1/2 inches)
4	Spacer
2	Pivot pin
2	Cotter pin (5/32 x 1-3/4 inches)
2	Caster fork
2	Caster wheel
2	Spanner
2	Bolt (1/2 x 5 inches)
4	Flat washer
2	Locknut (1/2 inch)
8	Thrust washer
2	Lynch pin
2	Rear cradle
2	Cradle spacer
6	Bolt (3/8 x 2 inches)
6	Flange nut (3/8 inch)
2	Cushion
2	Cushion spacer
4	Screw (#10 x 1 inch)
4	Locknut (#10)

Installing the Spacer

1. Install the spacers into the pivot bracket (Figure 3).

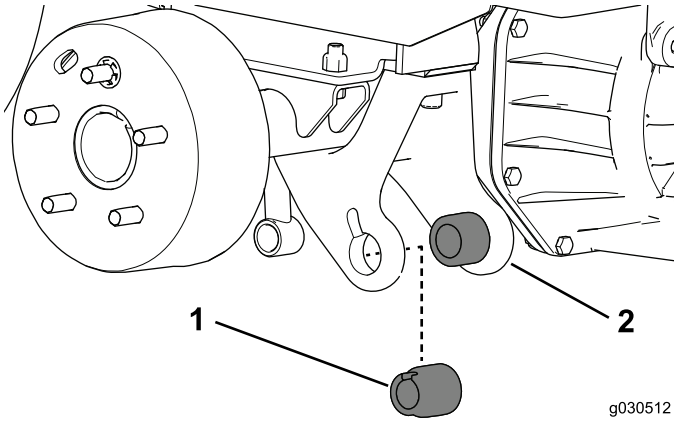

Figure 3

1. Spacer
2. Pivot bracket

2. Verify the cutout for the roll pin on the spacer is aligned with the inset for the roll pin on the pivot bracket (Figure 4).

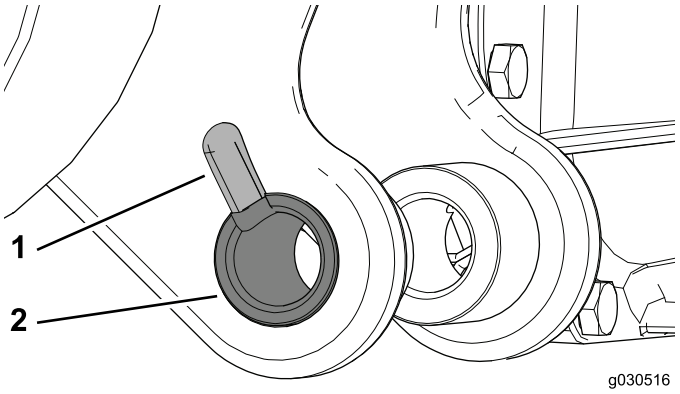

Figure 4

1. Pivot-arm inset
2. Spacer

3. Repeat the previous steps to the other side of the machine.

Installing the Pivot Pin

1. Insert the pivot pin hole of the lift arm between the 2 spacers (Figure 5).

   Note: Mount the lift arm with the bend positioned outward.

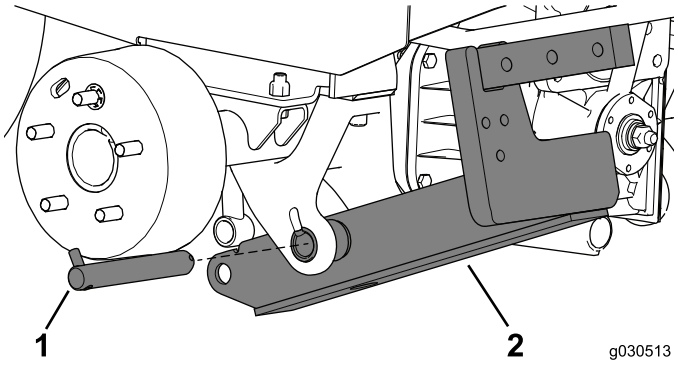

Figure 5

1. Pivot pin
2. Lift arm

2. Insert the pivot pin through the spacers and lift arm (Figure 5).

   Note: Ensure that the roll pin on the pivot pin is inserted into the inset of the pivot arm.

3. Insert the cotter pin into the hole in the pivot pin (Figure 6).

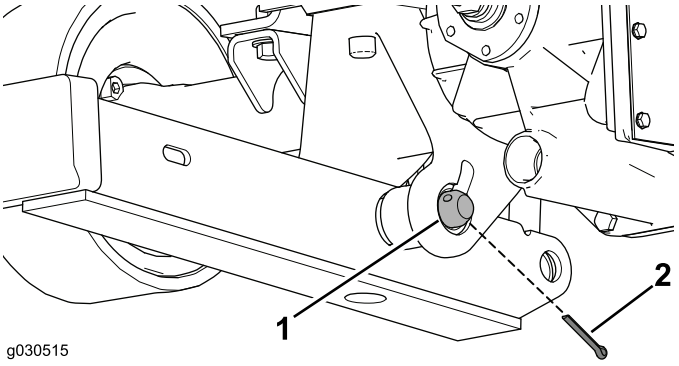

Figure 6

1. Pivot pin
2. Cotter pin

4. Spread apart the open end of the cotter pin to secure the pivot pin.
5. Repeat the previous steps to the other side of the machine.

Connecting the Lift Cylinder

1. Remove the outer-cotter pin securing the cylinder pin to the lift cylinder (Figure 7).

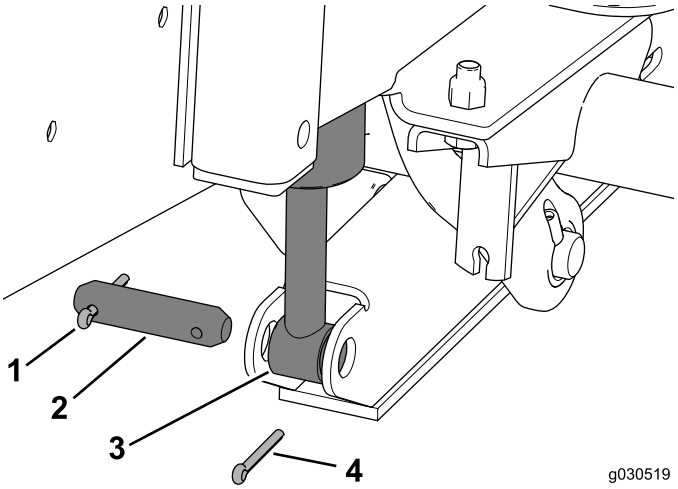

Figure 7

1. Cotter pin
2. Cylinder pin
3. Lift cylinder
4. Cotton pin

2. Insert the cylinder pin through the lift arm and lift cylinder (Figure 7).
3. Insert the cotter pin into the cylinder pin (Figure 7).

   Note: Spread apart the open end of both cotter pins to secure the cylinder pin.

4. Repeat the previous steps to the other side of the machine.

Configuring the Brake Spring

1. Remove the cotter pin from the clevis pin holding the brake strut and yoke together (Figure 8).

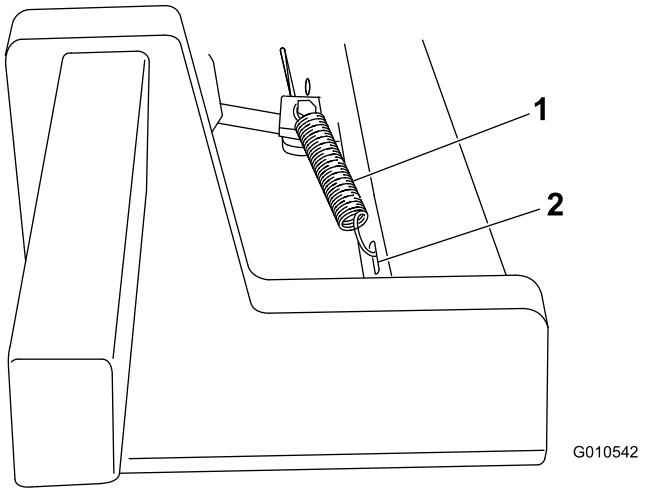

Figure 8

1. Brake return spring
2. Slotted hole

2. Install the short end of the spring into the hole in the clevis pin to retain the parts together.

3. Connect the other end of the springs to the slotted holes in the lift arms.
4. Repeat the previous steps to the other side of the machine.

Installing the Wheels

1. Install the wheels you removed in an earlier step onto the machine.
2. Hand-tighten the lug nuts to secure the wheels to the machine.
3. Use a jack to lower the front end of the machine to the ground.
4. Torque the lug nuts to 103 to 127 N·m (76 to 94 ft-lb) in the order shown in Figure 9.

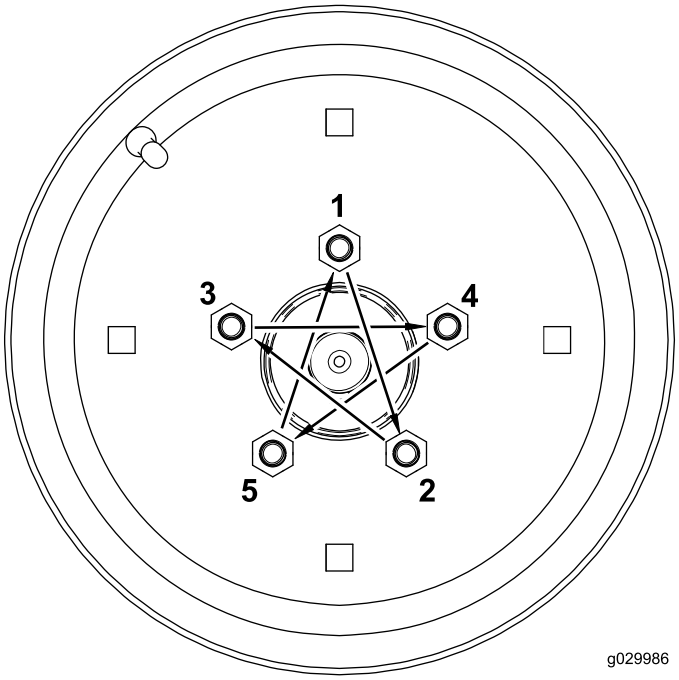

Figure 9

Installing the Carrier Frame

1. Use the bolts (1/2 x 5 inches), flat washers, spanners, and locknuts to secure the caster wheels to the caster forks (Figure 10).

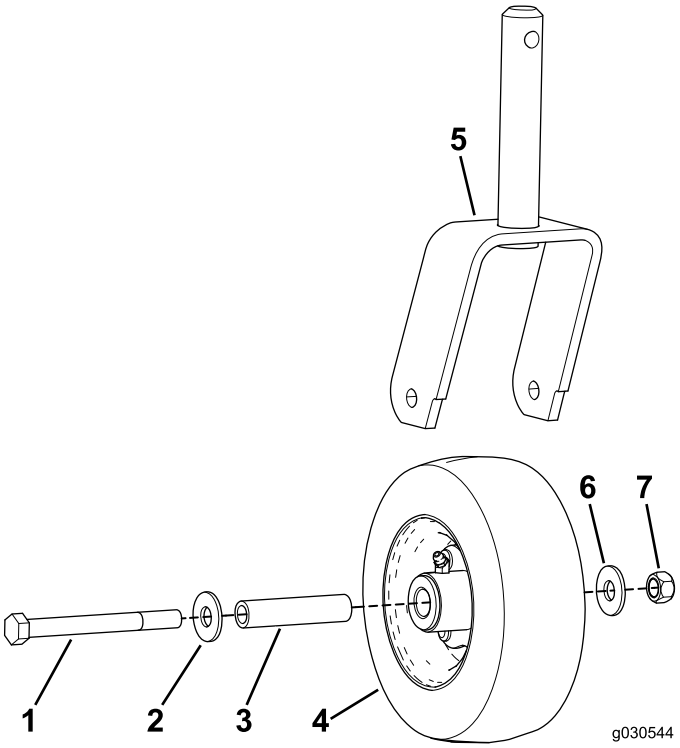

Figure 10

1. Bolt (1/2 x 5 inches)
2. Flat washer
3. Spanner
4. Caster wheel
5. Caster fork
6. Flat washer
7. Locknut

2. Use the 4 thrust washers and lynch pins to secure the caster assemblies to the carrier frame (Figure 11).

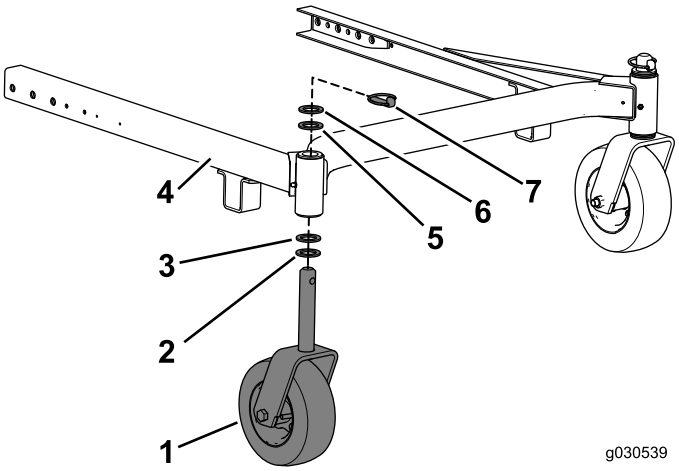

Figure 11

1. Caster assembly
2. Thrust washer
3. Thrust washer
4. Carrier frame
5. Thrust washer
6. Thrust washer
7. Lynch pin

Note: Grease the castor wheel shafts with No. 2 grease after installing and after the first time you use the machine.

3. Use the 2 bolts (1/2 x 1-1/2 inches) to secure the carrier frame to the lift arms (Figure 12).

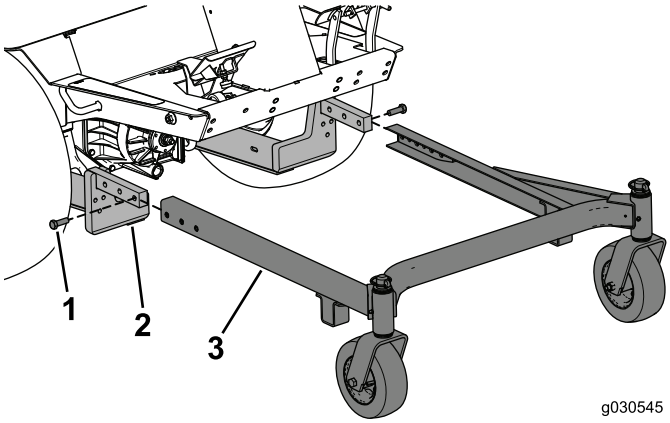

Figure 12

1. Bolt (1/2 x 1-1/2 inches)
2. Lift arm
3. Carrier frame

4. Torque the bolt and nut to 103 to 127 N·m (76 to 94 ft-lb)
5. Use the 3 bolts (3/8 x 2 inches), cradle spacers, and flange nuts to secure the rear cradles to the lift arms (Figure 13).

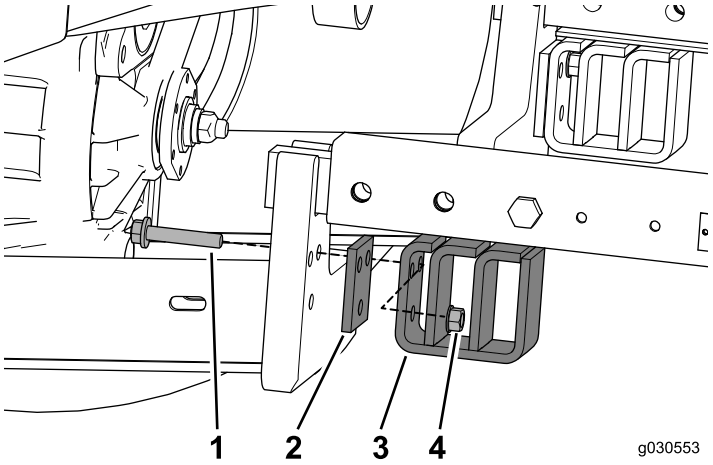

Figure 13

1. Bolt (3/8 x 2 inches)
2. Cradle spacer
3. Rear cradle
4. Flange nut

6. Torque the bolt and nut to 37 to 45 N·m (27 to 33 ft-lb).
7. Use the 2 screws (#10 x 1 inch) and locknuts to secure the cushions and cushion spacers to the carrier frame (Figure 14).

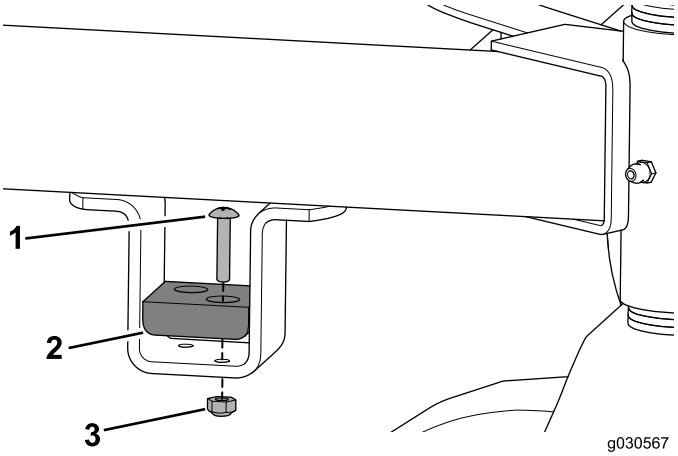

Figure 14

1. Screw (#10 x 1 inch)
2. Cushion
3. Locknut

Note: Use the cushion spacer if the clevis pin on the mower deck does not rest on the cushion.

3

Installing the Mower Deck

Parts needed for this procedure:

1	Mower deck
4	Clevis pin
4	Hairpin

Installing the Mower Deck

1. Raise the carrier frame (Figure 15).

   Note: You must run the engine to lower the carrier frame on the GM 3280-D and the 3320 models.

2. Move the mower deck under the carrier frame (Figure 15).

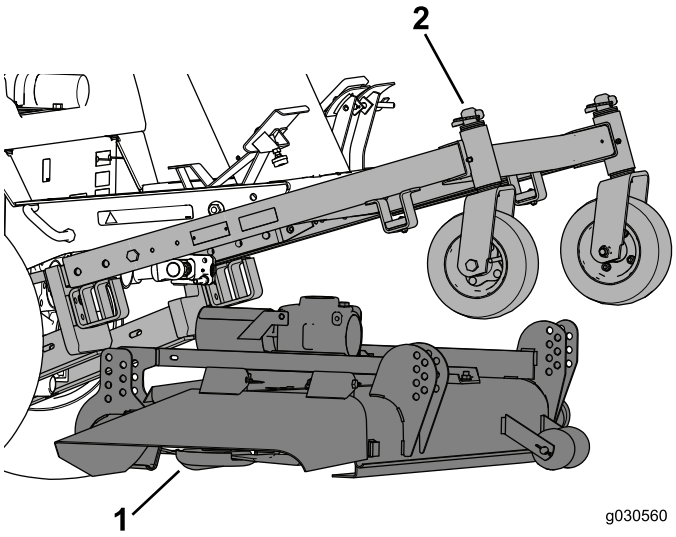

Figure 15

1. Mower deck
2. Carrier frame

3. Lower the carrier frame over the mower deck.

   Note: You must run the engine to lower the carrier frame on the GM 3280-D and the 3320 models.

4. Use the 4 clevis pins and hairpins to secure the mower deck to the carrier frame at the desired height (Figure 16).

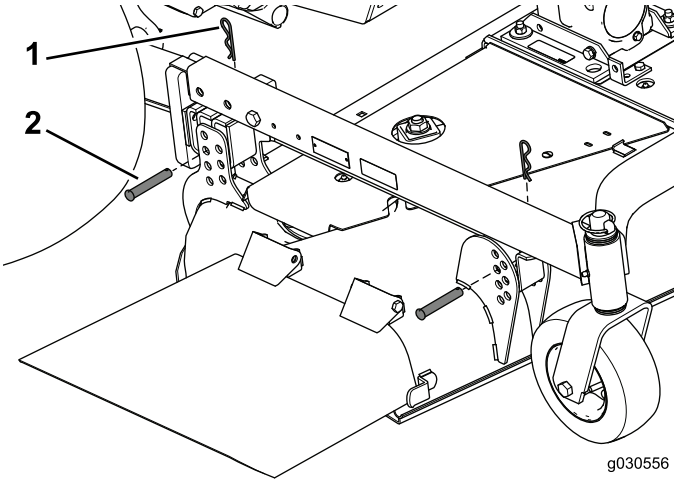

Figure 16

1. Hairpin
2. Clevis pin

   Note: Have an assistant use a block and lever to raise the mower deck as you install the clevis and hairpins.

5. Use the following figure to adjust the height of cut of the mower deck (Figure 17).

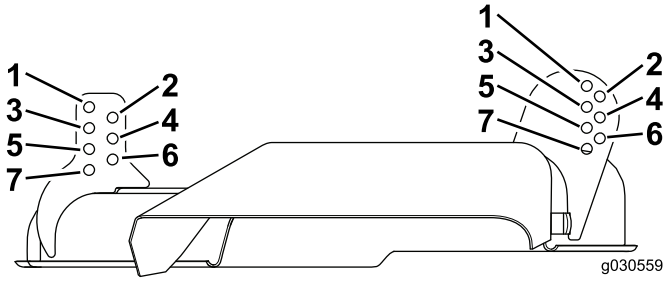

Figure 17

1. 25 mm (1 inch)
2. 38 mm (1-1/2 inches)
3. 51 mm (2 inches)
4. 64 mm (2-1/2 inches)
5. 76 mm (3 inches)
6. 89 mm (3-1/2 inches)
7. 102 mm (4 inches)

6. Use the cushion spacer if the clevis pin does not rest on the cushion (Figure 18).

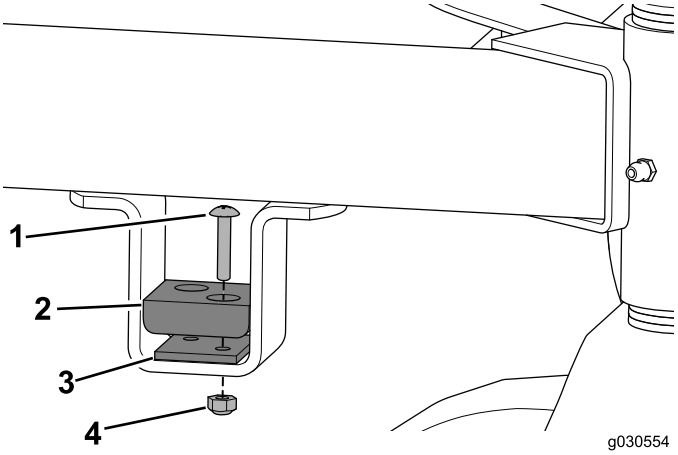

Figure 18

1. Screw (#10 x 1 inch)
2. Cushion
3. Cushion spacer
4. Locknut

Connecting the Power Take-off

1. Remove the hardware that secures the PTO assembly to the traction unit and set it aside for later use (Figure 19).

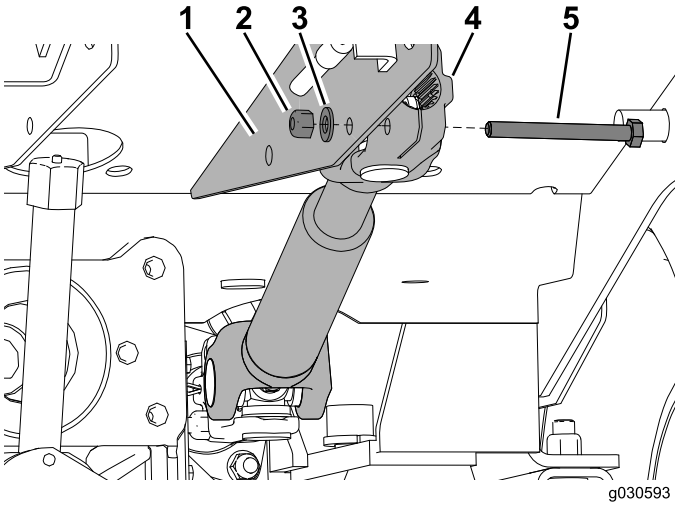

Figure 19

1. Traction unit
2. Locknut
3. Flat washer
4. End yolk
5. Bolt (5/16 x 3 inches)

2. Remove the hardware used to secure the PTO guard to the gearbox (Figure 20).

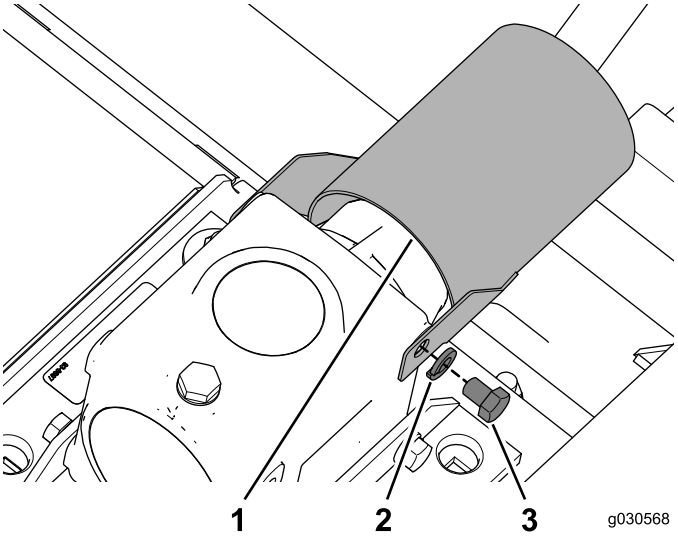

Figure 20

1. Bolt (3/8 x 1/2 inch)
2. Lock washer
3. PTO guard

3. Apply anti-seize grease to the inside of the end yolk and to the gearbox-spline shaft.

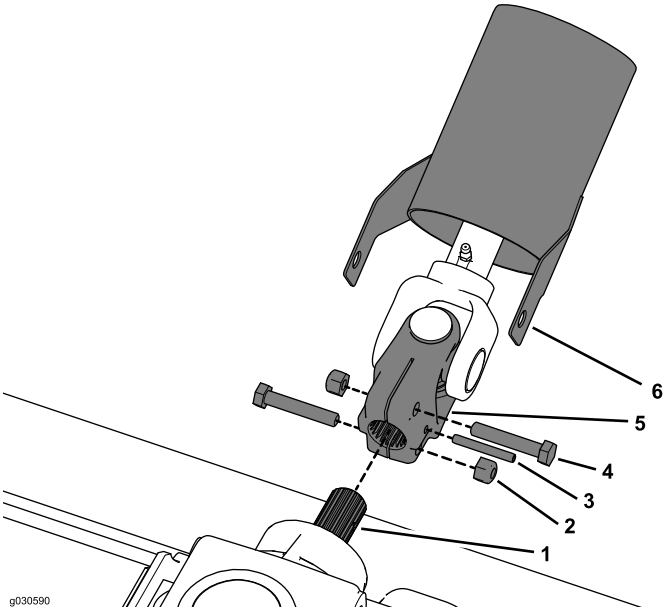

Figure 21

1. Spline shaft
2. Locknut
3. Roll pin
4. Bolt (5/16 x 1-3/4 inches)
5. PTO guard

4. Use the 2 bolts (5/16 x 1-3/4 inches), flat washers, locknuts, and roll pin to secure the end yolk to the gearbox-spline shaft (Figure 21).

   Note: The 2 bolts (5/16 x 1-3/4 inches), flat washers, locknuts, and roll pin are contained in the loose parts kit that shipped with the traction unit.

5. Slide the PTO guard over the end yolk and secure it with the 2 bolt (3/8 x 1/2 inch) and washer (Figure 22).

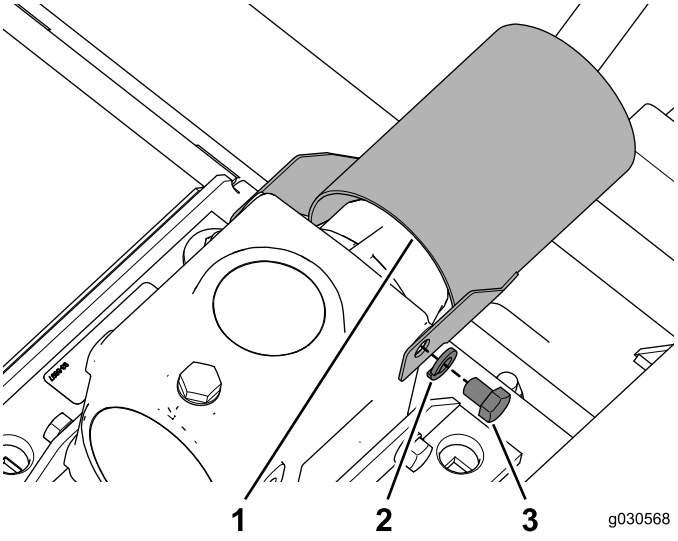

Figure 22

1. Bolt (3/8 x 1/2 inch)
2. Lock washer
3. PTO guard

6. Torque the bolt to 37 to 45 N·m (27 to 33 ft-lb).

4

Installing Rear Weight

No Parts Required

Procedure

The 2 wheel drive Groundsmaster 200 Series, 3280-D, and 3320 traction units comply with the ANSI B71.4-2012 standard when equipped with rear weight. Refer to the chart in the traction unit *Operator's Manual* to determine the combinations of weight required. Order the parts from your Toro Distributor.

The 4 wheel drive Groundsmaster 200 Series and 3280-D traction units do not need additional rear weight to comply with the ANSI B71.4-2012 standard.

Product Overview

Specifications

Note: Specifications and design are subject to change without notice.

Width of Cut	1314 mm (51-3/4 inches)
Height of Cut	Adjustable from 25 to 102 mm (1 to 4 inches) in 13 mm (1/2 inch) increments
Net Weight	153 kg (338 lb)

Attachments/Accessories

A selection of Toro approved attachments and accessories is available for use with the machine to enhance and expand its capabilities. Contact your Toro Distributor.

To best protect your investment and maintain optimal performance of your Toro equipment, count on Toro genuine parts. When it comes to reliability, Toro delivers replacement parts designed to the exact engineering specification of our equipment. For peace of mind, insist on Toro genuine parts.

Operation

Determine the left and right sides of the machine from the normal operating position.

Adjusting the Height of Cut

1. Use the following figure to determine the holes to be used to set the height of cut for the mower deck (Figure 23).

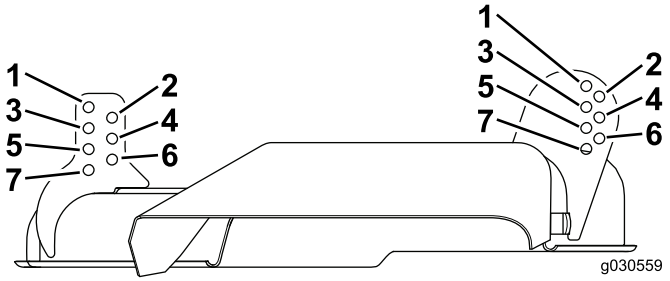

Figure 23

1. 25 mm (1 inch)
2. 38 mm (1-1/2 inches)
3. 51 mm (2 inches)
4. 64 mm (2-1/2 inches)
5. 76 mm (3 inches)
6. 89 mm (3-1/2 inches)
7. 102 mm (4 inches)

2. Use a clevis and hairpin to secure each section of the mower deck to the carrier frame (Figure 24).

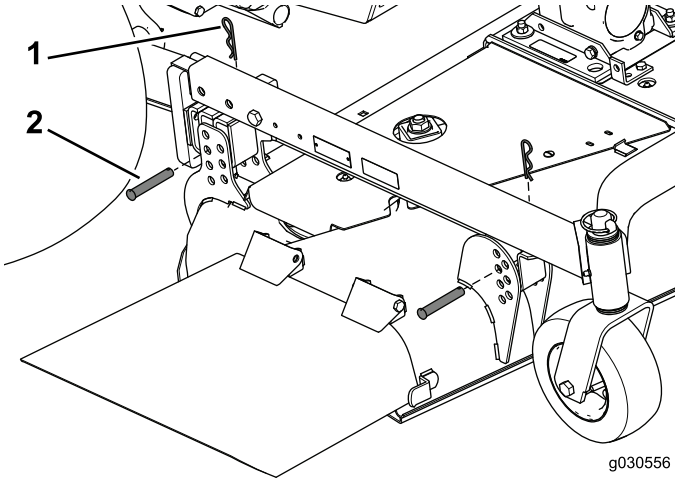

Figure 24

1. Hairpin
2. Clevis pin

Note: Have an assistant to help you raise the mower deck when you install the clevis and hairpins.

3. Use the cushion spacer if the clevis pin does not contact the cushion at the height of cut (Figure 25).

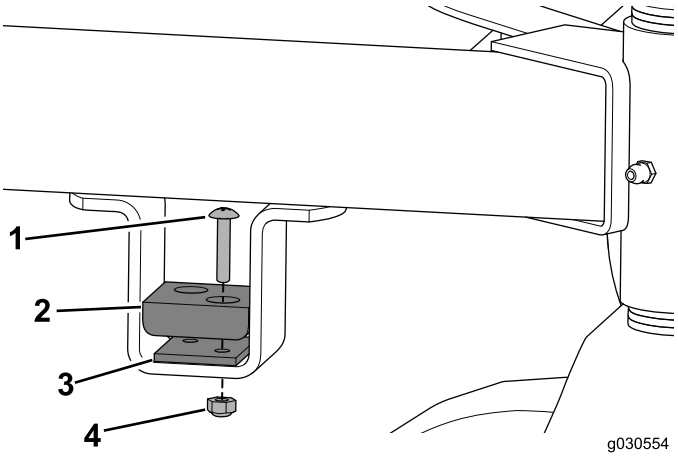

Figure 25

1. Screw (#10 x 1 inch)
2. Cushion
3. Cushion spacer
4. Locknut

Adjusting the Rollers

Adjust the rear rollers on the mower deck if the height of cut is set to 25 mm (1 inch) or 38 mm (1-1/2 inches).

1. Move the machine onto a level surface, engage the parking brake, shut off the engine, and remove the key from the ignition.
2. Raise the cutter deck to access the rear rollers.
3. Support the carrier frame to prevent it from lowering during the procedure.
4. Remove the cotter pin that secures the roller shaft to the center bracket.

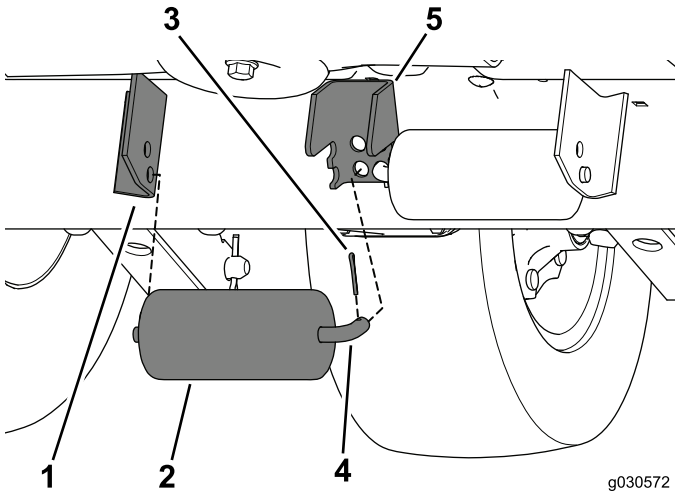

Figure 26

1. Outer bracket
2. Roller
3. Cotter pin
4. Roller shaft
5. Center bracket

5. Pull the shaft out of the center bracket and then slide it out of the outer bracket.
6. Move the assembly to the appropriate location.

7. Install the cotter pins to secure the assembly.

   Note: Repeat the previous steps to the remaining roller.

Checking the Gearbox Lubricant

The gearbox is designed to operate on SAE 80-90 weight gear lube. Although the gearbox is shipped with lubricant from the factory, check the fluid level before operating the mower deck.

1. Move the machine onto a level surface, engage the parking brake, shut off the engine, and remove the key from the ignition.
2. Remove the dipstick/fill plug from the top of the gearbox (Figure 27) and ensure that the lubricant is between the marks on the dipstick. If the lubricant level is low, add enough lubricant until the level is between the marks.

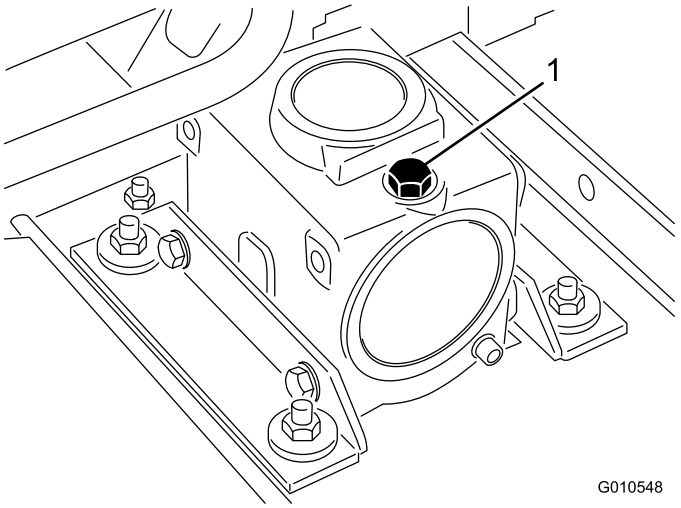

Figure 27

1. Dipstick/fill plug

Adjusting Weight Transfer

On Groundsmaster 3280-D and 3320 models only, refer to the traction unit *Operator's Manual* for the procedure to adjust the counterbalance pressure for best performance.

Using the Grass Deflector

⚠ DANGER

Without the grass deflector mounted in place, you and others are exposed to blade contact and thrown debris. Contact with the rotating mower blade(s) and thrown debris can cause injury or death

- **Never remove the grass deflector from the mower because the grass deflector routes material down toward the turf. If the grass deflector is ever damaged, replace it immediately.**
- **Never put your hands or feet under the mower.**
- **Never operate the mower with the deflector removed from the mower deck or tied/blocked in a raised position.**

The grass deflector is spring loaded into its downward normal operating position. It can also be moved out of the way to facilitate loading in a trailer.

Maintenance

Important: The fasteners on the covers of this machine are designed to remain on the cover after removal. Loosen all of the fasteners on each cover a few turns so that the cover is loose but still attached, then go back and loosen them until the cover comes free. This can prevent you from accidentally stripping the bolts free of the retainers.

Lubricating the Castors

Service Interval: Before each use or daily

Lubricate the castor bearings and bushings with lithium grease or molybdenum grease after every 8 hours of operation or daily, whichever comes first. More often under severe conditions.

- Castor spindle (Figure 28)
- Castor wheel (Figure 28)

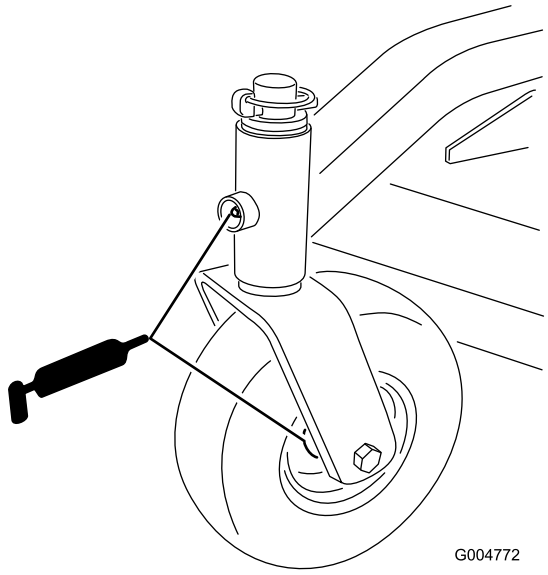

Figure 28

Lubricating the Mower Deck

Service Interval: Every 50 hours

The mower deck must be lubricated regularly. All other bearings, bushings, and the gearbox must be lubricated after every 50 hours of operation. May need more often under severe conditions.

1. Lubricate the following areas:
   - Right and left lift-arm pivot pins (Figure 29)

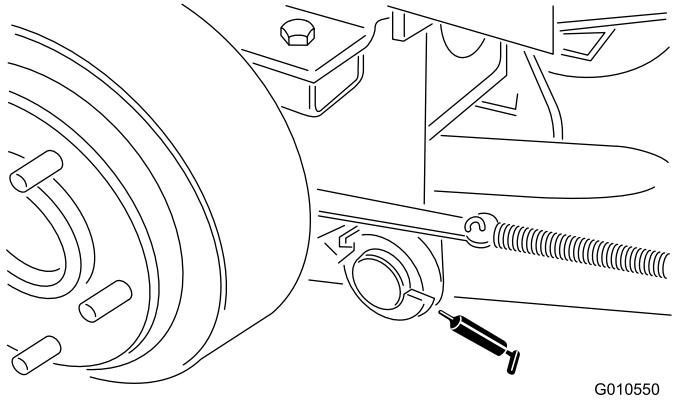

Figure 29

   - Blade-spindle bearings (Figure 30)

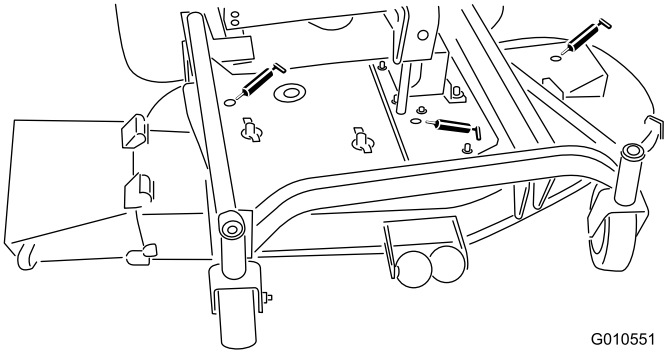

Figure 30

2. Move the machine onto a level surface, engage the parking brake, shut off the engine, and remove the key from the ignition.

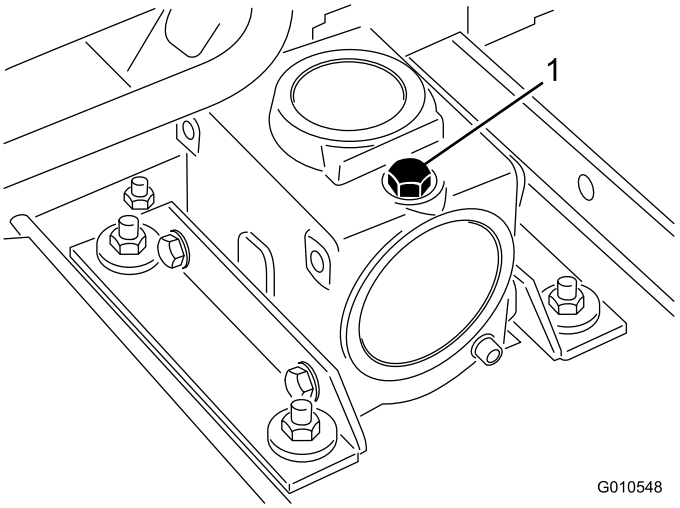

Figure 31

1. Dipstick/fill plug

3. Remove the dipstick/fill plug from the top of the gearbox (Figure 31) and ensure that the lubricant is between the marks on the dipstick. If the lubricant level is low, add SAE 80-90 weight gear lube until the

level is between the marks. You may use SAE 80-90 weight synthetic gear lube as an alternative.

Removing the Mower Deck

1. Move the machine onto a level surface, engage the parking brake, lower the mower deck, shut off the engine, and remove the ignition key.
2. Remove and set aside the hardware securing the PTO guard to the gearbox and slide the guard out of the way (Figure 22).
3. Remove and set aside the 2 bolts, locknuts, and roll pin securing the end yolk to the gearbox shaft (Figure 32).

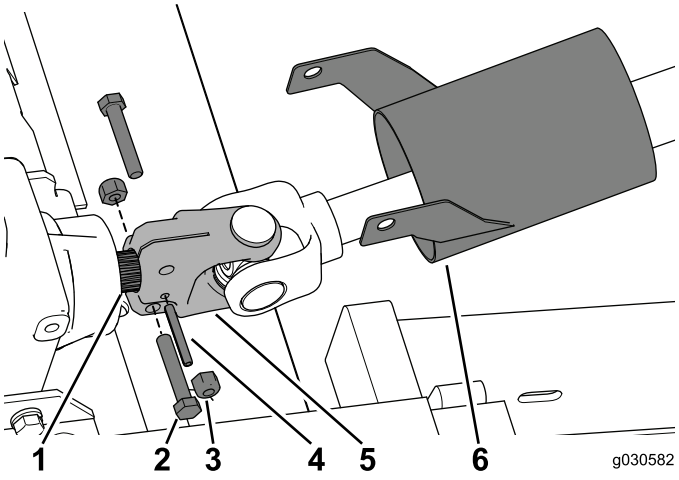

Figure 32

1. Gearbox shaft
2. Bolt (5/16 x 1-3/4 inch)
3. Locknut
4. Roll pin
5. End yolk
6. PTO guard

4. Remove and set aside the clevis and hairpins that secure the mower deck to the carrier frame (Figure 33).

   Note: Have an assistant use a block and lever to raise the mower deck as you remove the clevis and hairpins.

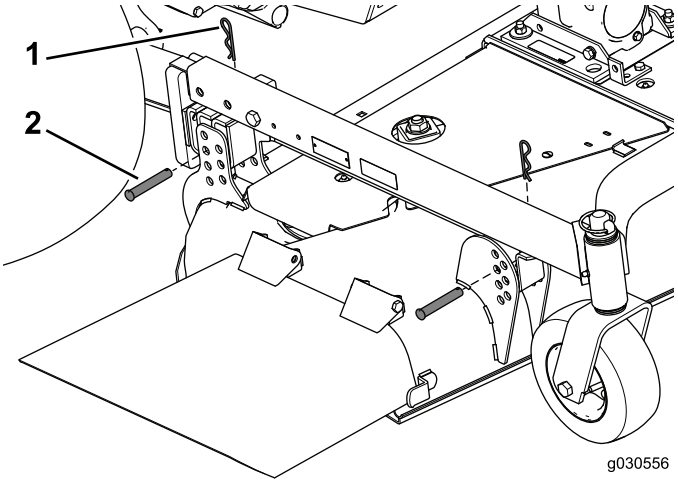

Figure 33

1. Hairpin
2. Clevis pin

5. Raise the carrier frame.

   Note: You must run the engine to raise the carrier frame on the GM 3280-D and the 3320 models.

   ⚠ DANGER

   If you start the engine and allow the PTO shaft to rotate, serious injury could result.

   Do not start the engine and engage the PTO lever when the PTO shaft is not connected to the gearbox on the mower deck.

6. Slide the mower deck away from the traction unit.

Note: The carrier frame must be removed if the traction unit is used with any other accessory.

Servicing the Caster Arms

The caster arms have bushings pressed into the top and bottom portion of the tube. Wear can occur over time. Check the wear of the bushings by moving the castor fork side to side. Replace both of the bushings if the castor fork has side to side movement.

1. Raise the mower deck so that the wheels are off the ground and block it so that it cannot accidentally fall.
2. Remove the caster assembly from the carrier frame (Figure 11).
3. Use a pin punch or similar tool to remove the bushings from the tube (Figure 34).

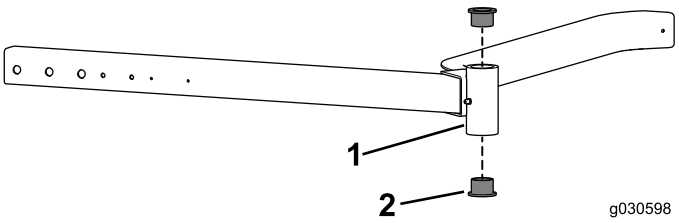

Figure 34

1. Tube
2. Bushing

4. Clean the inside of the tube thoroughly.
5. Lightly grease the inside and outside of the replacement bushings before installing them into the tube.
6. Inspect the castor shaft and replace it if it is worn or damaged.
7. Install the castor assembly to the carrier frame (Figure 11).

Important: When the bushings are installed, the inside diameter may collapse slightly, and this may not allow the castor shaft to be installed. If the castor spindle does not slide through the new bushings and mounting tube, ream both bushings to an inside diameter of 1.126 inches.

Servicing the Caster Wheel

The caster wheel rotates on a roller bearing that is supported on a spanner bushing. Wear can occur over time. Frequently lubricate the caster bearing and spanner bushing to minimize the wear to the assembly.

1. Remove and set aside the lynch pin that secures the caster assembly to the carrier frame (Figure 11).
2. Remove and set aside the bolt and locknut that secure the caster wheel to the fork.

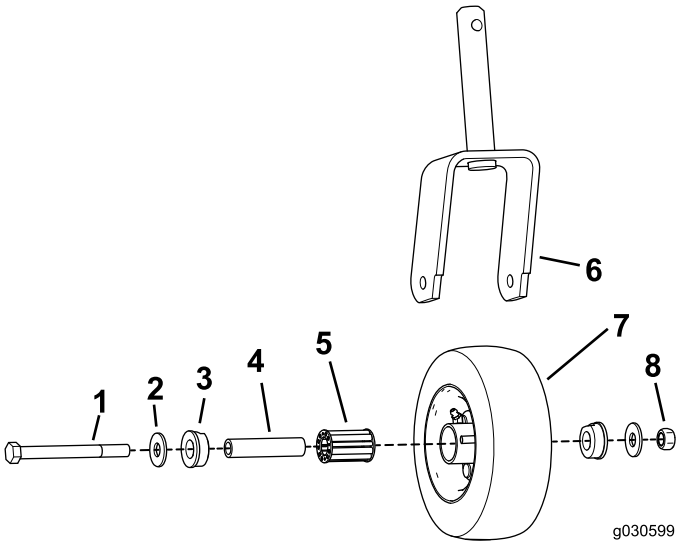

Figure 35

1. Bolt (1/2 x 5 inches)
2. Flat washer
3. Bearing retainer
4. Spanner bushing
5. Roller bearing
6. Caster fork
7. Wheel assembly
8. Locknut

3. Remove and set aside the flat washers, bearing retainers, spanner bushings, and roller bearing.
4. Inspect the parts for wear or damage and replace if necessary.

   Note: You may need to wash or wipe the parts to properly inspect them for wear or damage.
5. Assemble the caster wheel by inserting the roller bearing, the bearing retainers, and the spanner bushing (Figure 35).

   Note: Ensure that the flat feature of the bearing retainer is aligned with the grease fitting in the wheel (Figure 36).

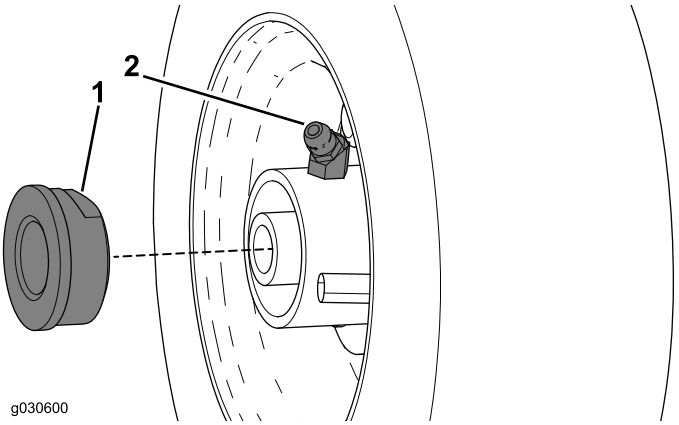

Figure 36

1. Bearing retainer
2. Grease fitting

6. Continue assembling the caster wheel by securing the flat washers between the wheel assembly and the fork with the bolt and locknut (Figure 37).

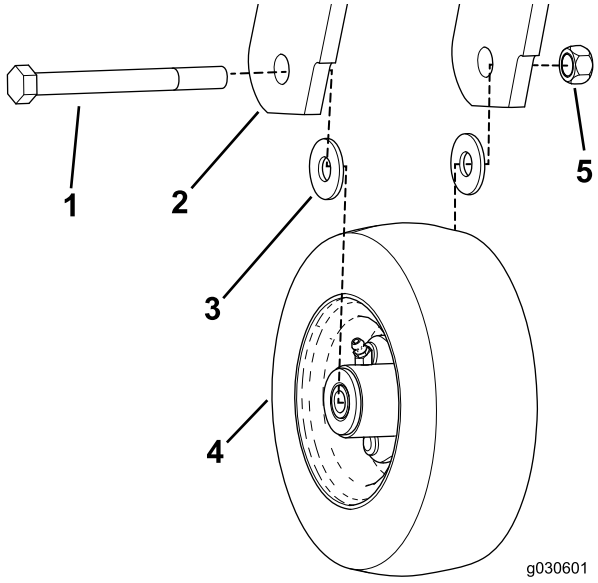

Figure 37

1. Bolt (1/2 x 5 inches)
2. Caster fork
3. Flat washer
4. Wheel assembly
5. Locknut

7. Apply grease to the roller bearing though the grease fitting after assembly (Figure 26).

Checking for a Bent Blade

1. Move the machine onto a level surface, raise the mower deck, engage the parking brake, put the traction pedal into the NEUTRAL position, the PTO lever into the OFF position, shut off the engine, and remove the key from the ignition.
2. Disconnect the spark-plug wires from the spark plugs
3. Block the mower deck to prevent it from moving.
4. Rotate the blade until the ends face forward and backward. Measure from the inside of the mower deck to the cutting edge at the front of the blade (Figure 38).



Figure 38

Note: Save the measured value for use in later steps.

5. Rotate the opposite end of the blade forward. Measure between the mower deck and cutting edge of the blade at the same position as in step 4 The difference between the dimensions obtained in steps 4 and 5 must not exceed 3 mm (1/8 inch). If the dimension exceeds 3 mm (1/8 inch), replace the blade because it is bent; refer to Removing the Cutting Blade (page 19).

Removing the Cutting Blade

The blade must be replaced if it hit a solid object, if it is out-of-balance, worn, or bent. Always use genuine Toro replacement blades to ensure safety and optimum performance. Never use blades made by other manufacturers because they could be dangerous.

⚠ DANGER

A worn or damaged blade can break, and a piece of the blade could be thrown at you or bystanders, resulting in serious personal injury or death.

- **Inspect the blade periodically for wear or damage.**
- **Do not try to straighten a blade that is bent.**
- **Never weld a broken or cracked blade.**
- **Replace a worn or damaged blade with a new Toro blade to ensure continued safety certification of the product.**

1. Move the machine onto a level surface, raise the mower deck, engage the parking brake, put the traction pedal into the NEUTRAL position, the PTO lever into the OFF position, shut off the engine, and remove the key from the ignition.
2. Disconnect the spark-plug wires from the spark plugs
3. Block the mower deck to prevent it from moving.
4. Grasp the end of the blade using a rag or thickly padded glove. Remove the blade bolt, anti-scalp cup, and blade from the spindle shaft (Figure 39).

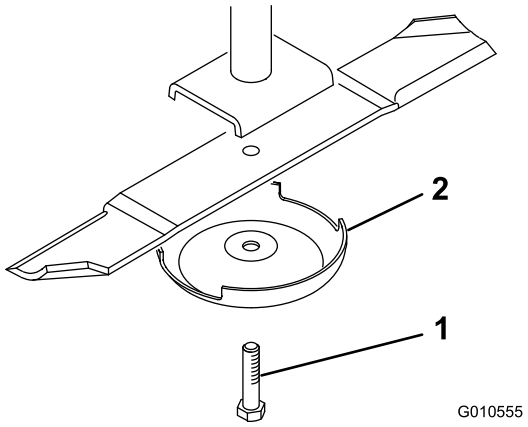

Figure 39

1. Blade bolt
2. Anti-scalp cup

5. Install the blade sail facing toward the mower deck with the anti-scalp cup and blade bolt. Tighten the blade bolt to 115 to 149 N·m (85 to 110 ft-lb).

Inspecting and Sharpening the Blade

When you check and service the cutting blade, consider especially the sail and the cutting edge. Both cutting edges and the sail, which is the turned up portion opposite the cutting edge, contribute to a good quality of cut. The sail is important because it pulls grass upward to produce an even cut. However, the sail gradually wear down during operation, and this condition is normal. As the sail wears down, the quality-of-cut degrades somewhat, even though the cutting edges are sharp. The cutting edge of the blade must be sharp so that the grass is cut rather than torn. A dull cutting edge is evident when the tips of the grass appear brown and shredded. Sharpen the cutting edges to correct this condition.

1. Move the machine onto a level surface, raise the mower deck, engage the parking brake, put the traction pedal into the NEUTRAL position, the PTO lever into the OFF position, shut off the engine, and remove the key from the ignition.
2. Disconnect the spark plug wires from the spark plugs
3. Block the mower deck to prevent it from moving.
4. Examine the cutting ends of the blade carefully, especially where the flat and curved parts of the blade meet (Figure 40). Since sand and abrasive material can wear away the metal that connects the flat and curved parts of the blade, check the blade before using the machine. If the blade is worn (Figure 40), replace the blade; refer to Removing the Cutting Blade (page 19).

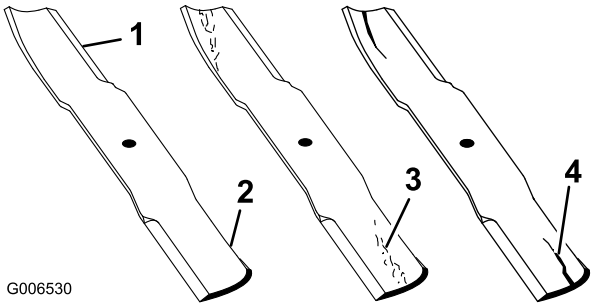

Figure 40

1. Cutting edge
2. Curved area/sail
3. Wear/slot forming
4. Crack

⚠ WARNING

If the blade is allowed to wear, a slot can form between the sail and flat part of the blade (Figure 40). Eventually, a piece of the blade may break off and be thrown from under the housing, possibly resulting in serious injury to you or bystanders.

- **Inspect the blade periodically for wear or damage.**
- **Replace a worn or damaged blade with a new Toro blade to ensure continued safety certification of the product.**

5. Examine the cutting edges of all blades. Sharpen the cutting edges if they are dull or nicked. Sharpen only the top side of the cutting edge and maintain the original cutting angle to ensure sharpness (Figure 41). The blade remain balanced if the same amount of metal is removed from both cutting edges.

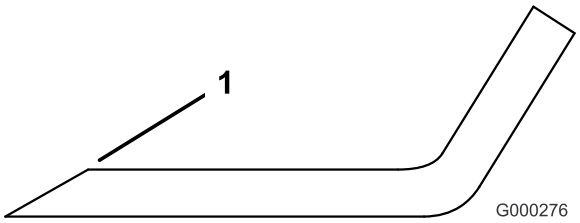

Figure 41

1. Sharpen at original angle

Note: Remove the blades and sharpen them on a grinder; refer to Safety (page 3). After sharpening the cutting edges, install the blade with the anti-scalp cup and blade bolt. The blade sails must be on top of the blade. Tighten the blade bolt to 115 to 149 N·m (85 to 110 ft-lb).

Checking and Correcting Mismatch of Blades

If one cutting blade cuts lower than the others, correct them as follows:

1. Lower the mower deck onto a level surface, engage the parking brake, put the traction pedal into the NEUTRAL position, the PTO lever into the OFF position, shut off the engine, and remove the key from the ignition.
2. Ensure that the tire pressure in all of the tires is equal.
3. Raise the height of cut to the 102 mm (4 inches) position; refer to Adjusting the Height of Cut (page 14).
4. Rotate the blades so that the tips line up with 1 another. The tips of the adjacent blades must be within 3 mm (1/8 inch) of each other. If the tips are not within 3 mm (1/8 inch) of each other, proceed to step 11 and

add shims between the spindle housing and bottom of the mower deck.

5. Ensure that the front height-of-cut pins are resting properly on the frame cushions. If the pins are not resting properly, place a shim or shims under the cushion to raise it for proper alignment.
6. Position all 3 blades in the A position (Figure 42) and measure from the level surface to the bottom of the tip end of each blade (Figure 43).

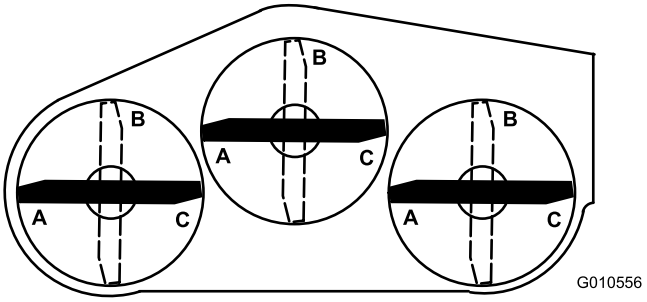

Figure 42

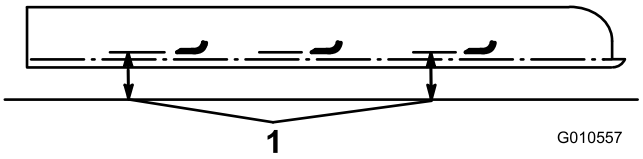

Figure 43

1. Measure from blade tip to a level surface.

7. Note the measurement obtained at A, rotate the blades to the B position (Figure 42), measure the distance of all the blades to the level surface, and note the dimensions (Figure 43).
8. Rotate the blades to the C position, measure, and note the distance measured (Figure 42 and Figure 43).
9. Compare the measurements at various positions. All dimensions must be equal within 6 mm (1/4 inch) from any 2 adjacent blades. The difference between the dimensions of all 3 blades must not exceed 10 mm (3/8 inch). If the difference exceeds specifications, proceed to step 10.
10. Remove the bolts, flat washers, and locknuts from the outer spindle in the area where the shims must be added. To raise or lower the blade, add a shim, between the spindle housing and bottom of the mower deck. Continue checking the alignment of the blades and adding shims until the tips of the blades are within the required dimension.
11. Equalize the side-to-side measurements as follows:
    A. Mower deck usually operated at 25 to 51 mm (1 to 2 inches) height of cut should have the low side of the mower deck raised. Remove the lynch pin securing the castor wheel on the low end (Figure 44) and remove the castor assembly.

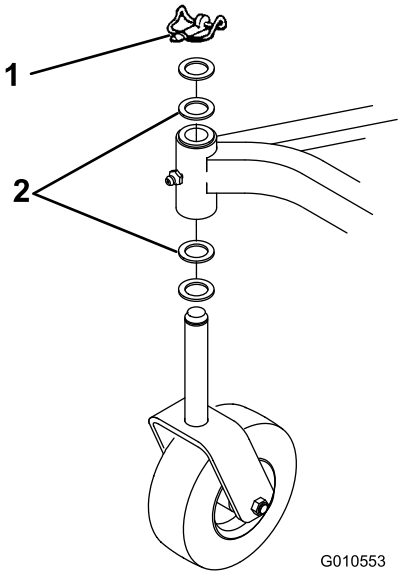

Figure 44

1. Lynch pin
2. Thrust washers (as required)

    B. Transfer one thrust washer from the top side of the castor shaft to the lower side, install the castor assembly, and compare the blade height of all blades; refer to steps 4 through 8. Continue adding thrust washers if the height still does not meet the requirements.
    C. If the mower deck is operated at the 51 mm to 102 mm (2 to 4 inches) height-of-cut, lower the high side of the mower deck. Remove the lynch pin of the castor at the high end of the unit and remove the castor assembly (Figure 44).
    D. Transfer one thrust washer from the lower side of the castor shaft to the top side, install the assembly, and compare the blade height of all of the blades; refer to steps 4 through 8. Repeat the procedure if the height still does not meet the requirements.
    E. If the height is within the specified dimension, install the lynch pin, set the height-of-cut to the proper height, and resume operation.

Replacing the Grass Deflector

1. Move the machine on a level surface, raise the mower deck, engage the parking brake, put the traction pedal into the NEUTRAL position, the PTO lever into the OFF position, shut off the engine, and remove the key from the ignition.
2. Remove the 2 bolts, locknuts, and springs that secure the deflector mounts to the pivot brackets (Figure 45).
3. To remove the pivot brackets, remove the carriage bolts and nuts (Figure 45).
4. Install the pivot brackets on top of the discharge opening with the carriage bolts and nuts. The head of

the carriage bolts must be on the inside of the mower deck.

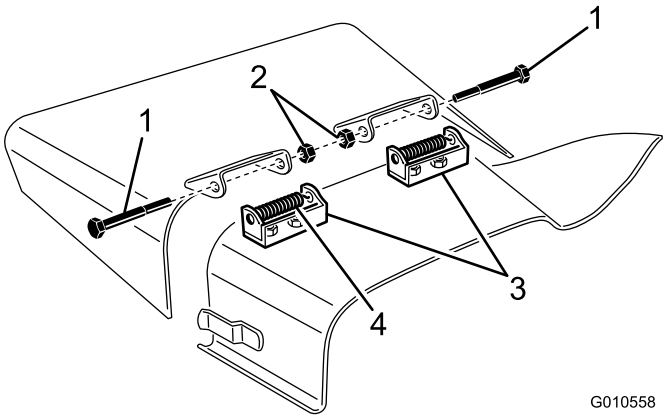

Figure 45

1. Bolt
2. Locknuts
3. Pivot brackets
4. Spring

5. Position the deflector mounts on the pivot brackets and secure the parts together with the bolts, locknuts, and springs. Both locknuts must face each other. Tighten the locknuts until they are flush against the deflector pivots.
6. Lift the deflector and allow it to drop to check the spring tension. The deflector must be held firmly in the full downward position by the spring tension. Correct it if necessary.

Adjusting the Idler Pulley

The idler pulley applies force against the belt so that power can be transmitted to the blade pulleys. If the idler is not tensioned against the belt with sufficient force, maximum power not be transmitted to the pulleys. Initial tension on a new belt requires 34 to 41 N·m (25 to 30 ft-lb) of torque on the large nut, which applies force against the belt. As the belt wears and loosens, 27 to 34 N·m (20 to 25 ft-lb) of torque on the large nut is required. If the idler is not adjusted to these specifications, adjust it.

1. Move the machine on a level surface, lower the mower deck, engage the parking brake, put the traction pedal into the NEUTRAL position, the PTO lever into the OFF position, shut off the engine, and remove the key from the ignition.
2. Release the latch and loosen the bolt securing the center cover.
3. Remove the center cover from the top of the mower deck.
4. Loosen the 2 nuts securing the idler plate in place. Using a socket and torque wrench, tighten the idler adjusting nut to 24 to 41 N·m (25 to 30 ft-lb) as shown in Figure 46.

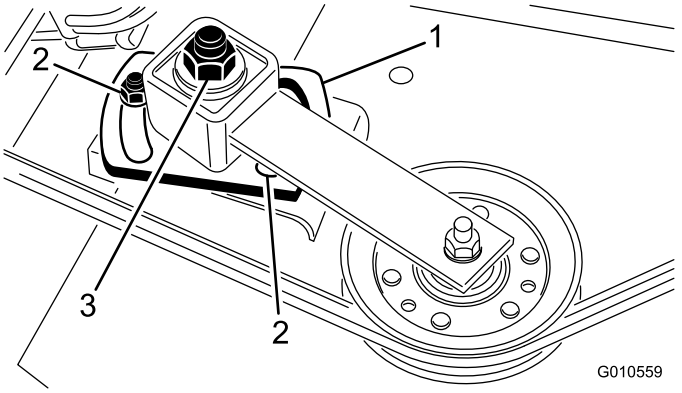

Figure 46

1. Idler plate
2. Nut
3. Idler adjustment

5. Hold the torque against the belt and tighten the 2 nuts so that the idler plate is held securely in place. Release the idler adjusting nut.
6. Install the cover to the top of the mower deck.
7. Engage the latch and tighten the bolt to the secure the cover.

Replacing the Drive Belt

The blade drive belt, tensioned by the adjustable idler, is very durable. However, after many hours of use, the belt shows signs of wear. Signs of a worn belt are: squealing when belt is rotating, blades slipping when cutting grass, frayed edges, burn marks, and cracks. Replace the belt if any of these conditions are evident.

1. Move the machine on a level surface, lower the mower deck, engage the parking brake, put the traction pedal into the NEUTRAL position, the PTO lever into the OFF position, shut off the engine, and remove the key from the ignition.
2. Release the latches and loosen the bolts securing the covers.
3. Remove the covers from the top of the mower deck.
4. Loosen the 2 nuts securing the idler plate in place and remove the old belt from the pulleys.
5. To install a new belt, the gearbox base must be removed. To do this, remove the 4 carriage bolts and locknuts holding the gearbox base.
6. Install the new belt around the gearbox pulley, spindle pulleys, stationary idler pulley, and adjustable idler pulley (Figure 47).

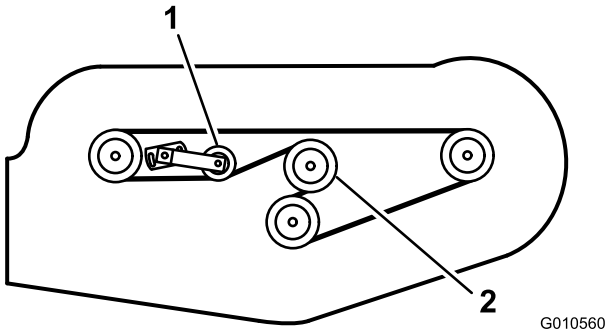

Figure 47

1. Adjustable idler pulley
2. Gearbox pulley

7. Install the gearbox base with the carriage bolts and locknuts.
8. Using a torque wrench, adjust the tension of the idler pulley against the belt; refer to Adjusting the Idler Pulley (page 22).
9. Install the covers to the top of the mower deck.
10. Engage the cover latches and tighten the bolts to secure the covers.

Troubleshooting

Problem	Possible Cause	Corrective Action
The mower deck not cut or cuts poorly.	1. The blades are dull.	1. Sharpen the blades.
	2. One or more blades are bent or damaged.	2. Replace the blades.
	3. The spindle bolts are loose.	3. Torque the spindle bolts to 115 to 149 N·m (85 to 110 ft-lb).
	4. The mower deck belts are loose or broken.	4. Tighten or replace the belts as necessary.
	5. The gearbox pulley is loose.	5. Tighten or replace the pulley.
	6. A gearbox shaft is broken.	6. Replace any broken shafts.
	7. The PTO belt is broken.	7. Replace the PTO belt.
	8. The PTO pulley is loose or broken.	8. Tighten or replace the pulley.
	9. The PTO shaft is broken.	9. Replace the PTO shaft.
	10. The pulley on the engine output shaft is loose or broken.	10. Tighten or replace the pulley.

Notes:

Notes:

Notes:

The Toro Warranty

A Two-Year Limited Warranty

Conditions and Products Covered

The Toro Company and its affiliate, Toro Warranty Company, pursuant to an agreement between them, jointly warrant your Toro Commercial product ("Product") to be free from defects in materials or workmanship for two years or 1500 operational hours*, whichever occurs first. This warranty is applicable to all products with the exception of Aerators (refer to separate warranty statements for these products). Where a warrantable condition exists, we will repair the Product at no cost to you including diagnostics, labor, parts, and transportation. This warranty begins on the date the Product is delivered to the original retail purchaser.
* Product equipped with an hour meter.

Instructions for Obtaining Warranty Service

You are responsible for notifying the Commercial Products Distributor or Authorized Commercial Products Dealer from whom you purchased the Product as soon as you believe a warrantable condition exists. If you need help locating a Commercial Products Distributor or Authorized Dealer, or if you have questions regarding your warranty rights or responsibilities, you may contact us at:

Toro Commercial Products Service Department
Toro Warranty Company
8111 Lyndale Avenue South
Bloomington, MN 55420-1196

952–888–8801 or 800–952–2740
E-mail: commercial.warranty@toro.com

Owner Responsibilities

As the Product owner, you are responsible for required maintenance and adjustments stated in your *Operator's Manual*. Failure to perform required maintenance and adjustments can be grounds for disallowing a warranty claim.

Items and Conditions Not Covered

Not all product failures or malfunctions that occur during the warranty period are defects in materials or workmanship. This warranty does not cover the following:

- Product failures which result from the use of non-Toro replacement parts, or from installation and use of add-on, or modified non-Toro branded accessories and products. A separate warranty may be provided by the manufacturer of these items.
- Product failures which result from failure to perform recommended maintenance and/or adjustments. Failure to properly maintain your Toro product per the Recommended Maintenance listed in the *Operator's Manual* can result in claims for warranty being denied.
- Product failures which result from operating the Product in an abusive, negligent, or reckless manner.
- Parts subject to consumption through use unless found to be defective. Examples of parts which are consumed, or used up, during normal Product operation include, but are not limited to, brake pads and linings, clutch linings, blades, reels, rollers and bearings (sealed or greasable), bed knives, spark plugs, castor wheels and bearings, tires, filters, belts, and certain sprayer components such as diaphragms, nozzles, and check valves, etc.
- Failures caused by outside influence. Conditions considered to be outside influence include, but are not limited to, weather, storage practices, contamination, use of unapproved fuels, coolants, lubricants, additives, fertilizers, water, or chemicals, etc.
- Failure or performance issues due to the use of fuels (e.g. gasoline, diesel, or biodiesel) that do not conform to their respective industry standards.
- Normal noise, vibration, wear and tear, and deterioration.
- Normal "wear and tear" includes, but is not limited to, damage to seats due to wear or abrasion, worn painted surfaces, scratched decals or windows, etc.

Parts

Parts scheduled for replacement as required maintenance are warranted for the period of time up to the scheduled replacement time for that part. Parts replaced under this warranty are covered for the duration of the original product warranty and become the property of Toro. Toro will make the final decision whether to repair any existing part or assembly or replace it. Toro may use remanufactured parts for warranty repairs.

Deep Cycle and Lithium-Ion Battery Warranty:

Deep cycle and Lithium-Ion batteries have a specified total number of kilowatt-hours they can deliver during their lifetime. Operating, recharging, and maintenance techniques can extend or reduce total battery life. As the batteries in this product are consumed, the amount of useful work between charging intervals will slowly decrease until the battery is completely worn out. Replacement of worn out batteries, due to normal consumption, is the responsibility of the product owner. Battery replacement may be required during the normal product warranty period at owner's expense. Note: (Lithium-Ion battery only): A Lithium-Ion battery has a part only prorated warranty beginning year 3 through year 5 based on the time in service and kilowatt hours used. Refer to the *Operator's Manual* for additional information.

Maintenance is at Owner's Expense

Engine tune-up, lubrication, cleaning and polishing, replacement of filters, coolant, and completing recommended maintenance are some of the normal services Toro products require that are at the owner's expense.

General Conditions

Repair by an Authorized Toro Distributor or Dealer is your sole remedy under this warranty.

Neither The Toro Company nor Toro Warranty Company is liable for indirect, incidental or consequential damages in connection with the use of the Toro Products covered by this warranty, including any cost or expense of providing substitute equipment or service during reasonable periods of malfunction or non-use pending completion of repairs under this warranty. Except for the Emissions warranty referenced below, if applicable, there is no other express warranty. All implied warranties of merchantability and fitness for use are limited to the duration of this express warranty.

Some states do not allow exclusions of incidental or consequential damages, or limitations on how long an implied warranty lasts, so the above exclusions and limitations may not apply to you. This warranty gives you specific legal rights, and you may also have other rights which vary from state to state.

Note regarding engine warranty:

The Emissions Control System on your Product may be covered by a separate warranty meeting requirements established by the U.S. Environmental Protection Agency (EPA) and/or the California Air Resources Board (CARB). The hour limitations set forth above do not apply to the Emissions Control System Warranty. Refer to the Engine Emission Control Warranty Statement supplied with your product or contained in the engine manufacturer's documentation for details

Countries Other than the United States or Canada

Customers who have purchased Toro products exported from the United States or Canada should contact their Toro Distributor (Dealer) to obtain guarantee policies for your country, province, or state. If for any reason you are dissatisfied with your Distributor's service or have difficulty obtaining guarantee information, contact the Toro importer.

374-0253 Rev D