Form No. 3396-623 Rev A

Power Max 826 OXE Snowthrower

Model No. 37781—Serial No. 316000001 and Up

Operator's Manual

⚠ WARNING

CALIFORNIA
Proposition 65 Warning

This product contains a chemical or chemicals known to the State of California to cause cancer, birth defects, or reproductive harm.

The engine exhaust from this product contains chemicals known to the State of California to cause cancer, birth defects, or other reproductive harm.

Introduction

This machine is intended to be used by residential homeowners or professional, hired operators. It is designed for removing snow from paved surfaces, such as driveways and sidewalks, and other surfaces for traffic on residential or commercial properties. It is not designed for removing materials other than snow, nor is a model with a pivoting scraper designed for clearing off gravel surfaces.

Read this information carefully to learn how to operate and maintain your machine properly and to avoid injury and machine damage. You are responsible for operating the machine properly and safely.

You may contact Toro directly at www.Toro.com for machine and accessory information, help finding a dealer, or to register your machine.

Whenever you need service, genuine Toro parts, or additional information, contact an Authorized Service Dealer or Toro Customer Service and have the model and serial numbers of your machine ready. Figure 1 identifies the location of the model and serial numbers on the machine. Write the numbers in the space provided.

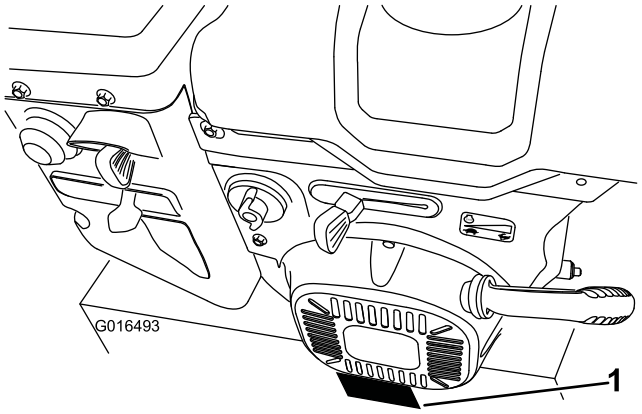

Figure 1

1. Model and serial number location

Model No. _____

Serial No. _____

This manual identifies potential hazards and has safety messages identified by the safety alert symbol (Figure 2), which signals a hazard that may cause serious injury or death if you do not follow the recommended precautions.



Figure 2

1. Safety alert symbol

This manual uses 2 words to highlight information. **Important** calls attention to special mechanical information and **Note** emphasizes general information worthy of special attention.

© 2015—The Toro® Company
8111 Lyndale Avenue South
Bloomington, MN 55420

Register at www.Toro.com.

Original Instructions (EN)
Printed in the USA
All Rights Reserved

3396-623 A

Contents

Introduction 1
Safety 3
Safety and Instructional Decals 4
Setup 6
1 Installing the Upper Handle 6
2 Installing the Speed Selector Linkage 7
3 Installing the Chute 8
4 Installing the Chute Control Rod 8
5 Checking the Engine Oil Level 9
6 Checking the Tire Pressure 10
7 Checking the Skids and Scraper 10
8 Checking the Traction Drive Operation 10
Product Overview 11
Operation 12
Before Operation 12
Safety 12
Filling the Fuel Tank 12
During Operation 12
Safety 12
Starting the Engine 14
Stopping the Engine 15
Operating the Traction Drive 16
Operating the Speed Selector 16
Operating the Auger/Impeller Drive 17
Operating the Quick Stick™ 17
Unclogging the Discharge Chute 18
Operating Tips 18
After Operation 18
Safety 18
Preventing Freeze-up 19
Maintenance 20
Recommended Maintenance Schedule(s) 20
Maintenance Safety 20
Preparing for Maintenance 20
Checking the Engine Oil Level 21
Checking and Adjusting the Skids and Scraper 21
Checking and Adjusting the Traction Cable 22
Checking and Adjusting the Auger/Impeller Cable 22
Checking the Auger Gearbox Oil Level 23
Changing the Engine Oil 23
Lubricating the Hex Shaft 24
Replacing the Spark Plug 24
Adjusting the Discharge Chute Latch 25
Replacing the Drive Belts 25
Storage 26
Preparing the Machine for Storage 26
Removing the Machine from Storage 26
Troubleshooting 27

Safety

Before Operating

- **Read and understand the contents of this manual before operating the snowthrower.**
- **Become familiar with all controls and know how to stop the engine quickly.**

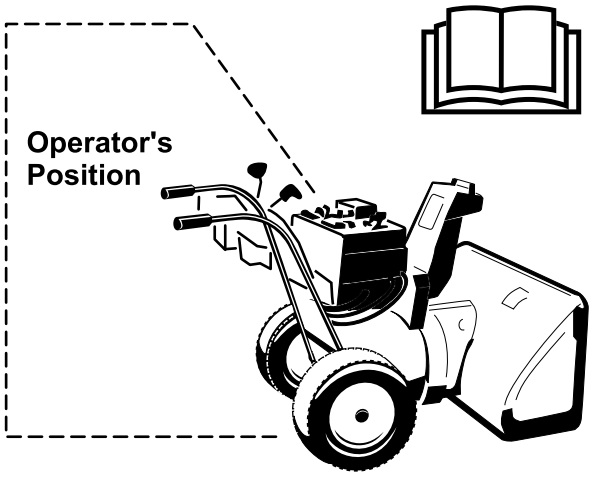

Caution: Improper use may result in loss of fingers, hands, or feet.

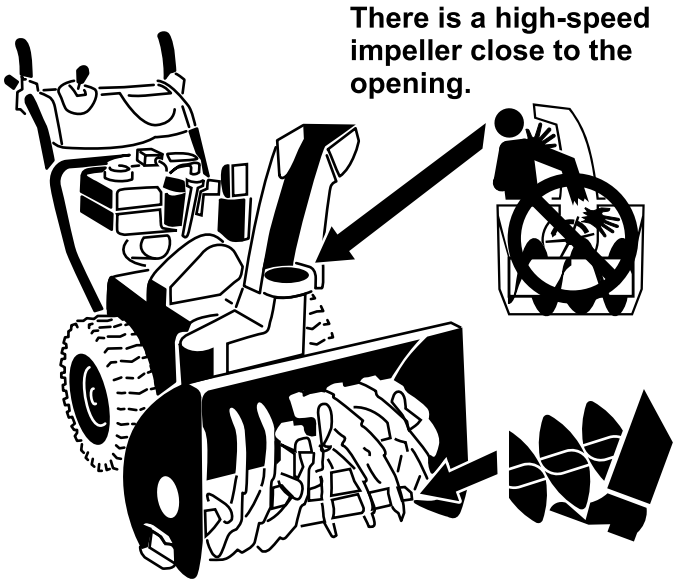

The low-speed auger has a moving pinch point close to the opening.

This machine meets or exceeds the B71.3 specifications of the American National Standards Institute in effect at the time of production.

- Read and understand the contents of the manual before you start the engine. Make sure everyone using this product knows how to use the product and understands the warnings.
- Do not put hands or feet near moving components on the machine.
- Do not operate machine without all guards and other safety protective devices in place and working on the machine.
- Keep clear of any discharge opening. Keep bystanders a safe distance from the machine.
- Keep children out of the operating area and under the watchful care of a responsible adult other than the operator. Never allow children to operate the machine.
- Shut the machine off before unclogging, servicing, or fueling.

Safety and Instructional Decals

Important: **Safety and instruction decals are located near areas of potential danger. Replace damaged decals.**

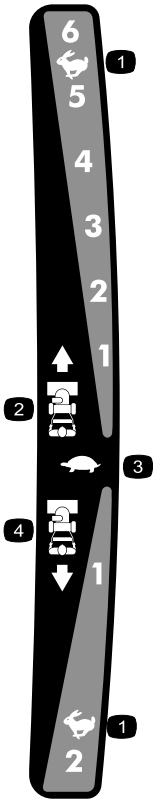

121–6823

1. Fast
2. Forward speeds
3. Slow
4. Reverse speeds

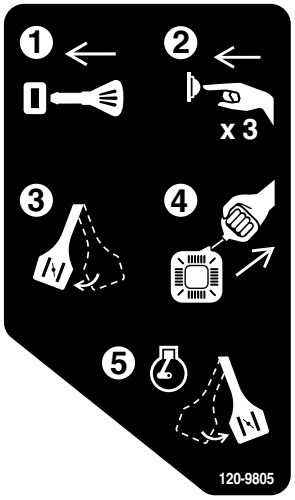

120-9805

1. Insert the key.
2. Prime the engine 3 times.
3. Engage the choke.
4. Pull the starter cord.
5. Once the engine is running, disengage the choke.



131–6487

1. Engine—stop
2. Slow
3. Fast

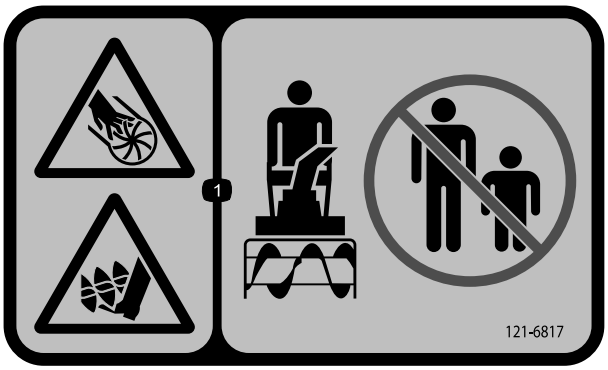

121–6817

1. Cutting dismemberment, impeller and cutting dismemberment, auger hazards—keep bystanders a safe distance from the snowthrower.

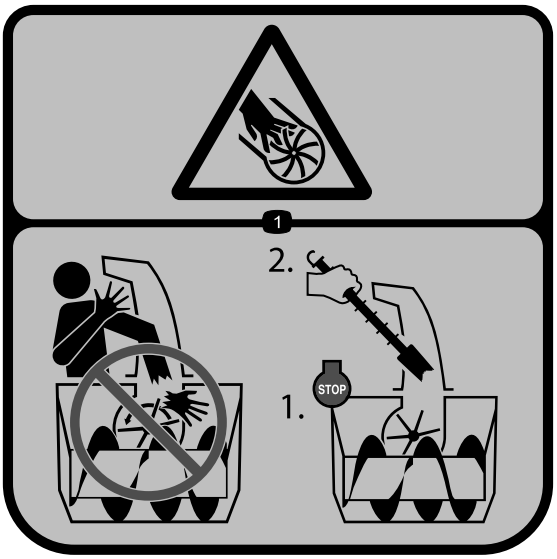

121–1239

Order part no. 121–1215

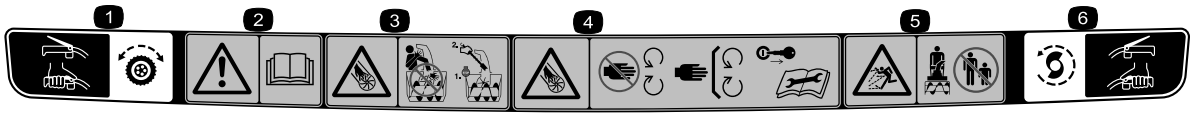

121–1240

Order part no. 120–7194

1. Traction drive—squeeze the lever to engage; release the lever to disengage.
2. Warning—read the *Operator's Manual*.
3. Cutting/dismemberment hazard, impeller—do not place your hand in the chute; stop the engine before leaving the operating position, use the tool to clear the chute.
4. Cutting dismemberment hazard, impeller—keep away from moving parts; remove the ignition key and read the instructions before servicing or performing maintenance.
5. Thrown object hazard—keep bystanders a safe distance from the snowthrower.
6. Auger/impeller drive—squeeze the lever to engage; release the lever to disengage.

Setup

Loose Parts

Use the chart below to verify that all parts have been shipped.

Procedure	Description	Qty.	Use
1	Handle bolts Curved washers Locknuts	2 2 2	Install the upper handle.
2	Hairpin cotter Flat washer	2 3	Install the traction control linkage.
3	Nut Carriage bolt Flat washer	2 2 2	Install the chute.
4	Carriage bolts Locknuts	2 2	Install the chute control rod.
5	No parts required	–	Check the engine oil level.
6	No parts required	–	Check the tire pressure.
7	No parts required	–	Check the skids and scraper.
8	No parts required	–	Check the operation of the traction drive.

1

Installing the Upper Handle

Parts needed for this procedure:

2	Handle bolts
2	Curved washers
2	Locknuts

Procedure

1. Lift and rotate the upper handle and position it over the lower handle (Figure 3).
2. Install 2 handle bolts, 2 curved washers, and 2 locknuts in the lower handle holes (Figure 3).

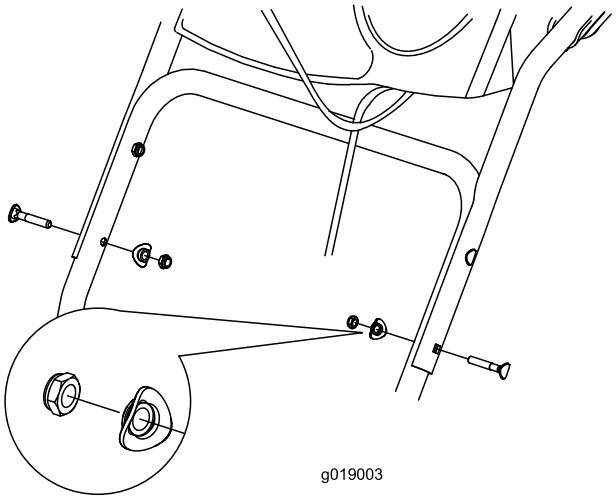

Figure 3

2

Installing the Speed Selector Linkage

Parts needed for this procedure:

2	Hairpin cotter
3	Flat washer

Procedure

1. Insert the lower end of the rod into the lower link arm so that the bent end of the speed control rod faces rearward (Figure 4).

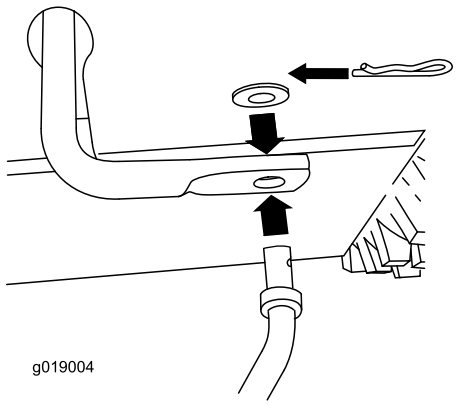

Figure 4

2. Secure the lower end of the speed control rod with a flat washer and a hairpin cotter (Figure 4).
3. Place a flat washer on the trunnion (Figure 5).

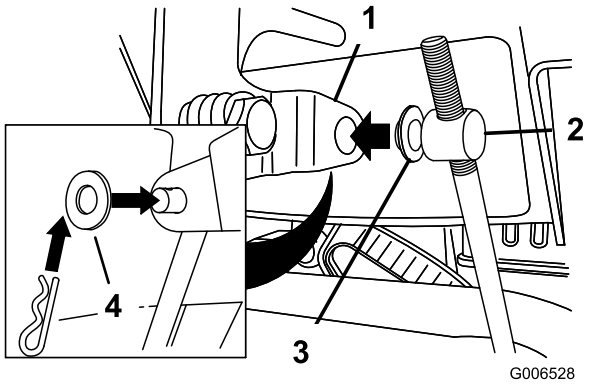

Figure 5

1. Speed selector lever
2. Trunnion
3. Inner washer
4. Outer washer

4. Shift the speed selector lever into Position R2.
5. Rotate the lower link arm fully upward (counterclockwise) (Figure 6).

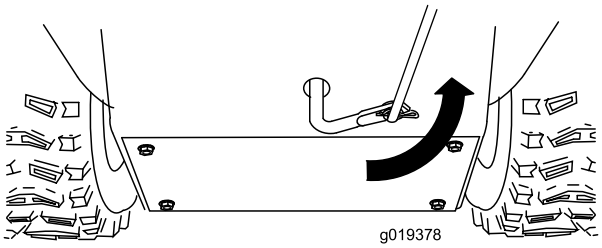

Figure 6

6. Pull up on the speed control rod and insert the trunnion into the hole in the speed selector lever (Figure 5).

   Note: If the trunnion does not fit into the hole when you lift up on the speed control rod, rotate the trunnion upward or downward on the speed control rod until it fits.

7. Secure the trunnion and upper end of the speed control rod with a washer and a hairpin cotter.

   Note: For easier installation, look down through the opening in the speed selector (Figure 7).

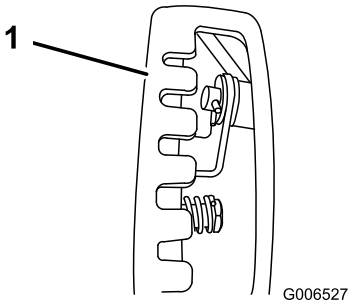

Figure 7

1. Speed selector

3

Installing the Chute

Parts needed for this procedure:

2	Nut
2	Carriage bolt
2	Flat washer

Procedure

1. Place the chute on the frame and the align the discharge chute mount to the chute support.

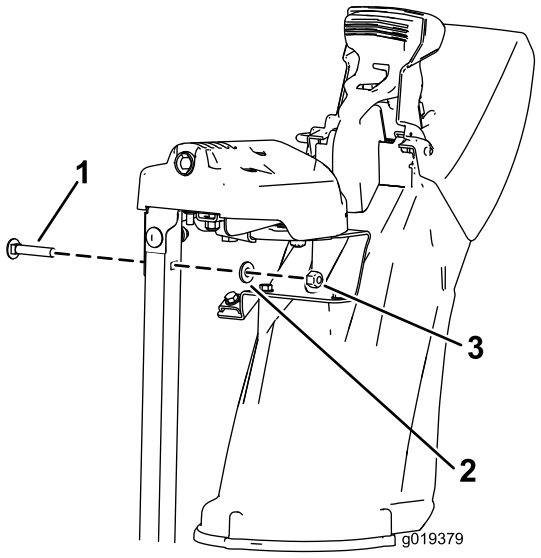

Figure 8

1. Carriage bolt
2. Flat washer
3. Nut

2. Secure the discharge chute mount using 2 bolts, 2 nuts, and 2 flat washers.

4

Installing the Chute Control Rod

Parts needed for this procedure:

2	Carriage bolts
2	Locknuts

Procedure

1. Unwrap the Quick Stick and rotate it so that it is upright and in the center.
2. Hold the blue trigger cap down and pull the lever fully rearward.

   Note: The discharge chute and deflector should face forward. If they do not, hold the blue trigger cap down (but do not move the Quick Stick) and rotate the discharge chute until they do.
3. Align the flattened back end of the long chute control rod with the flattened front end of the short rod that extends from the control panel so that they nest together (Figure 9).

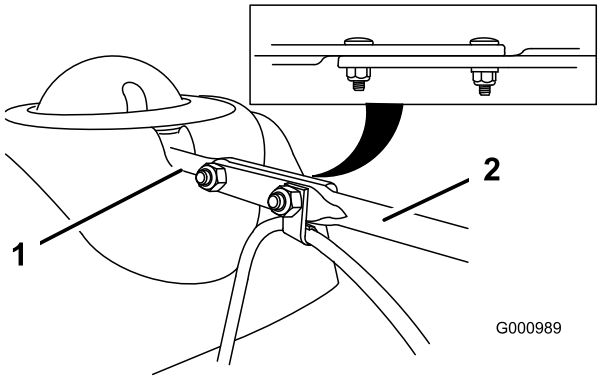

Figure 9

1. Short rod
2. Long chute control rod

4. Insert the front end of the rod into the opening in the back of the chute gear cover until it slides into the chute gear (Figure 10).

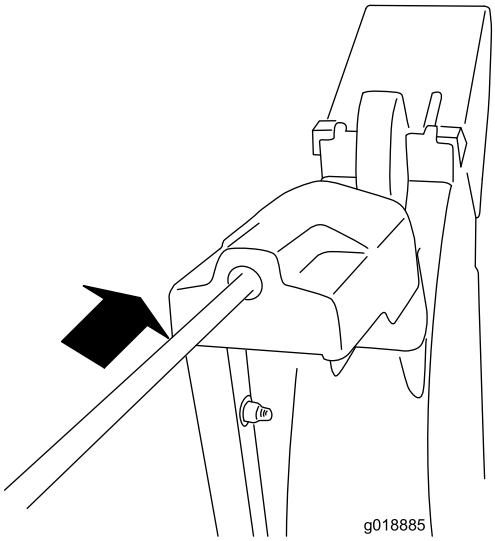

Figure 10

5. Align the holes in the nested ends of the rods and insert 2 carriage bolts (in the loose parts bag) through the short rod from the left side of the machine (from the operating position).
6. Insert the cable clip that supports the deflector cable onto the forward carriage bolt, and secure the carriage bolts with locknuts from the loose parts bag (Figure 11).

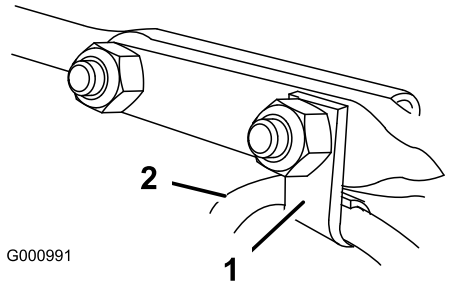

Figure 11

1. Cable clip
2. Deflector cable

7. Hold the blue trigger cap down and rotate the Quick Stick in a circle to ensure that the chute and deflector operate smoothly.

5

Checking the Engine Oil Level

No Parts Required

Procedure

Your machine comes with oil in the engine crankcase.

Note: Before starting the engine, check the oil level and add oil if necessary.

Use automotive detergent oil with an API service classification of SF, SG, SH, SJ, SL, or higher. Refer to your engine owner's manual.

Use Figure 12 below to select the best oil viscosity for the outdoor temperature range expected:

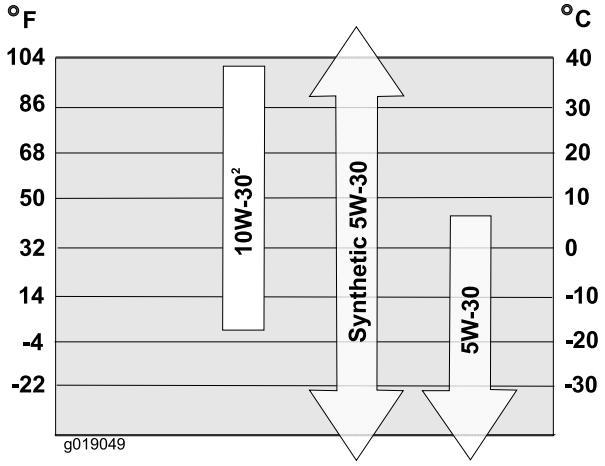

Figure 12

Engine Oil Capacities

Model	Engine Oil Capacity
37781	0.70 L (24 oz)

1. Remove the dipstick and **slowly** pour oil into the oil fill tube to raise the oil level to the Full mark on the dipstick. **Do not overfill.** (Figure 13).

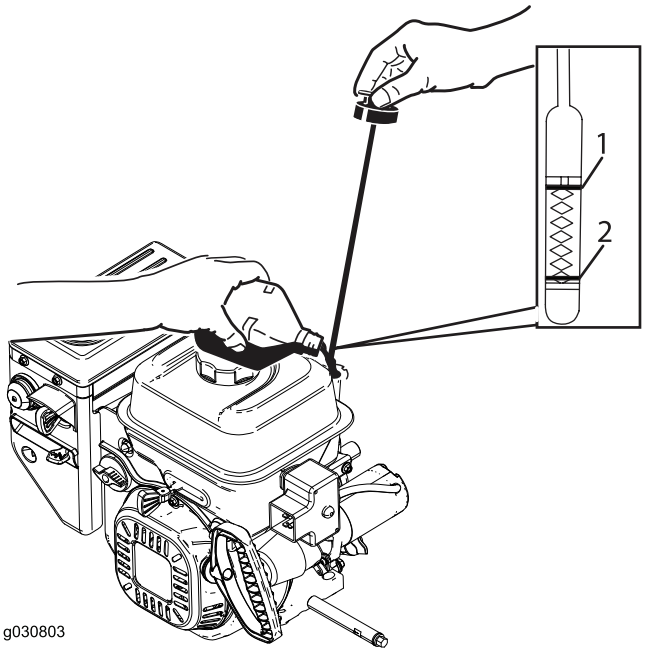

Figure 13

2. Install the dipstick securely.

   Note: Do not spill oil around the oil fill tube; oil could leak onto traction parts and cause the traction to slip.

6

Checking the Tire Pressure

No Parts Required

Procedure

The tires are overinflated at the factory for shipping. Reduce the pressure equally in both tires to between 17 and 20 psi (116 and 137 kPa).

7

Checking the Skids and Scraper

No Parts Required

Procedure

Refer to Checking and Adjusting the Skids and Scraper in Maintenance.

8

Checking the Traction Drive Operation

No Parts Required

Procedure

⚠ CAUTION

If the traction drive is not properly adjusted, the machine may move in the direction opposite of what you intended, causing injury and/or property damage.

Carefully check the traction drive and adjust it properly, if necessary.

1. Start the engine; refer to Starting the Engine.
2. Move the speed selector to Position R1; refer to Operating the Speed Selector.
3. Squeeze the left hand (traction) lever to the hand-grip (Figure 14).

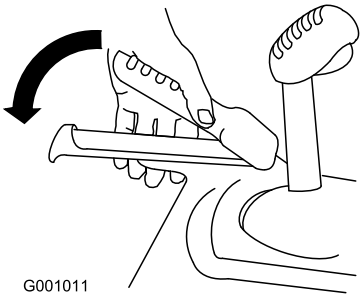

Figure 14

   The machine should move rearward. If the machine does not move or moves forward, complete the following:

   A. Release the traction lever and stop the engine.
   B. Disconnect the trunnion from the speed selector lever (Figure 5).
   C. Turn the trunnion downward (clockwise) on the speed control rod (Figure 5).
   D. Connect the trunnion to the speed selector lever (Figure 5).

4. Release the traction lever.
5. Move the speed selector to the Position 1; refer to Operating the Speed Selector.

6. Squeeze the left hand (traction) lever to the hand-grip (Figure 14).

   The machine should move forward. If the machine does not move or moves rearward, complete the following:

   A. Release the traction lever and stop the engine.

   B. Disconnect the trunnion from the speed selector lever (Figure 5).

   C. Turn the trunnion upward (counterclockwise) on the speed control rod (Figure 5).

   D. Connect the trunnion to the speed selector lever (Figure 5).

7. If you made any adjustments, repeat this procedure until no adjustments are required.

Important: If the machine moves when the traction lever is in the released position, check the traction cable (refer to Checking and Adjusting the Traction Cable) or take the machine to an Authorized Service Dealer for service.

Product Overview

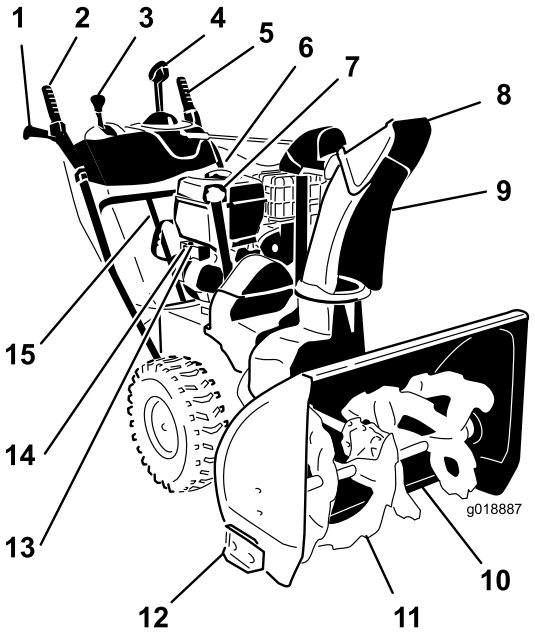

Figure 15

1. Hand-grip (2)
2. Auger/impeller lever
3. Speed selector lever
4. Quick Stick™ discharge chute control
5. Traction lever
6. Fuel tank cap
7. Engine oil fill tube/dipstick
8. Chute deflector
9. Discharge chute
10. Scraper
11. Auger
12. Skid (2)
13. Electric starter button
14. Electric starter plug-in
15. Snow cleanout tool

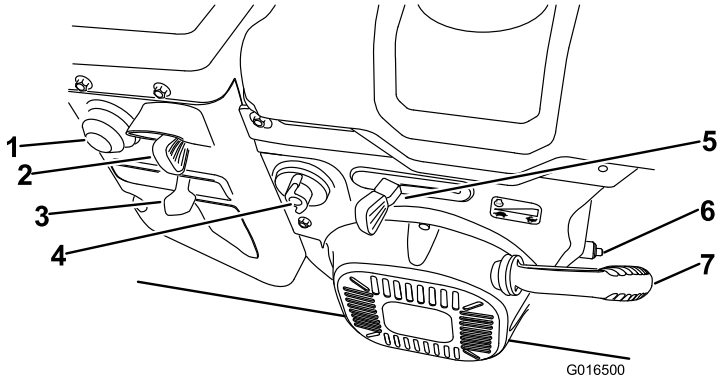

Figure 16

1. Primer
2. Ignition switch
3. Choke
4. Fuel shutoff valve
5. Throttle
6. Oil drain plug
7. Recoil starter

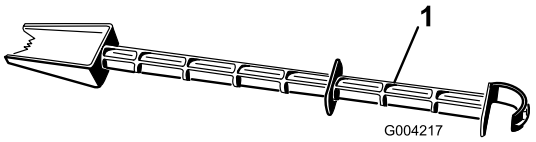

Figure 17

1. Snow cleanout tool (attached to the handle)

Operation

Before Operation

Safety

- Use extension cords and receptacles as specified by the manufacturer for all machines with electric starting motors.
- Do not operate the machine without wearing adequate winter garments. Avoid loose fitting clothing that can get caught in moving parts. Wear slip resistant footwear that will improve footing on slippery surfaces.
- Always wear safety glasses or eye shields during operation or while performing an adjustment or repair to protect eyes from foreign objects that may be thrown from the machine.
- Thoroughly inspect the area where the machine is to be used and remove all doormats, sleds, boards, wires, and other foreign objects.
- If a shield, safety device, or decal is damaged, illegible, or lost, repair or replace it before beginning operation. Also, tighten any loose fasteners.

Filling the Fuel Tank

⚠ DANGER

Gasoline is extremely flammable and explosive. A fire or explosion from gasoline can burn you and others.

- **To prevent a static charge from igniting the gasoline, place the container and/or machine on the ground before filling, not in a vehicle or on an object.**
- **Fill the tank outdoors when the engine is cold. Wipe up spills.**
- **Do not handle gasoline when smoking or around an open flame or sparks.**
- **Store gasoline in an approved fuel container, out of the reach of children.**
- For best results, use only clean, fresh, unleaded gasoline with an octane rating of 87 or higher ((R+M)/2 rating method).
- Oxygenated fuel with up to 10% ethanol or 15% MTBE by volume is acceptable.
- **Do not** use ethanol blends of gasoline (such as E15 or E85) with more than 10% ethanol by volume. Performance problems and/or engine damage may result which may not be covered under warranty.
- **Do not** use gasoline containing methanol.
- **Do not** store fuel either in the fuel tank or fuel containers over the winter unless a fuel stabilizer is used.
- **Do not** add oil to gasoline.

Important: To reduce starting problems, add fuel stabilizer to the fuel all season, mixing it with gasoline less than 30 days old. *Do not add oil to the gasoline.*

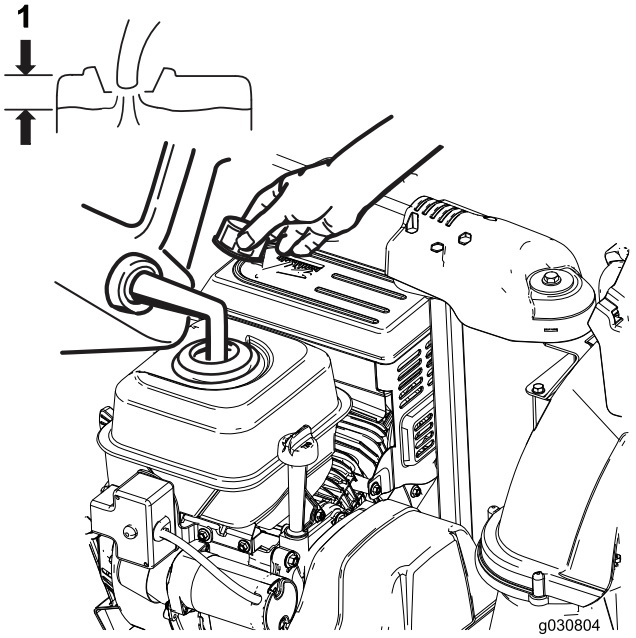

Figure 18

1. 1-1/2 inch (3.8 cm)

During Operation

Safety

- **Rotating auger blades can injure fingers or hands.** Stay behind the handles and away from the discharge opening while operating the machine. **Keep your face, hands, feet, and any other part of your body or clothing away from moving or rotating parts.**
- Never direct the discharge toward people or areas where property damage can occur.
- Exercise caution to avoid slipping or falling. Always be sure of your footing, and keep a firm hold on the handles. Walk; never run.

- Exercise extreme caution when operating on slopes.
- Never operate the machine without good visibility or light.
- Look behind and use care when backing up with the machine.
- When not actively clearing snow, disengage power to the rotor blades.
- Use extension cords and receptacles as specified by the manufacturer for all machines with electric starting motors.
- Do not attempt to clear snow from a gravel or crushed rock surface. This product is intended for use only on paved surfaces.
- Do not use the machine on a roof.
- Never attempt to make any adjustments while the engine is running (except when specifically recommended by manufacturer).
- Stay alert for hidden hazards or traffic.
- After striking a foreign object, stop the engine, remove the ignition key, thoroughly inspect the machine for any damage, and repair the damage before restarting and operating the machine.
- If the machine should start to vibrate abnormally, stop the engine and check immediately for the cause.
- Do not run the engine indoors, except when starting the engine and for transporting the machine in or out of the building. Open the outside doors; exhaust fumes are dangerous.
- Do not overload the machine capacity by attempting to clear snow at too fast a rate.
- Never touch a hot engine or muffler.
- Thoroughly inspect the electrical cord before plugging it into a power source. If the cord is damaged, do not use it to start the machine. Replace the damaged cord immediately. Unplug the power cord whenever you are not starting the machine.

Starting the Engine

1. Check the engine oil level. Refer to Checking the Engine Oil Level in Maintenance.
2. Turn the fuel shutoff valve 1/4 turn counterclockwise to open it (Figure 19).

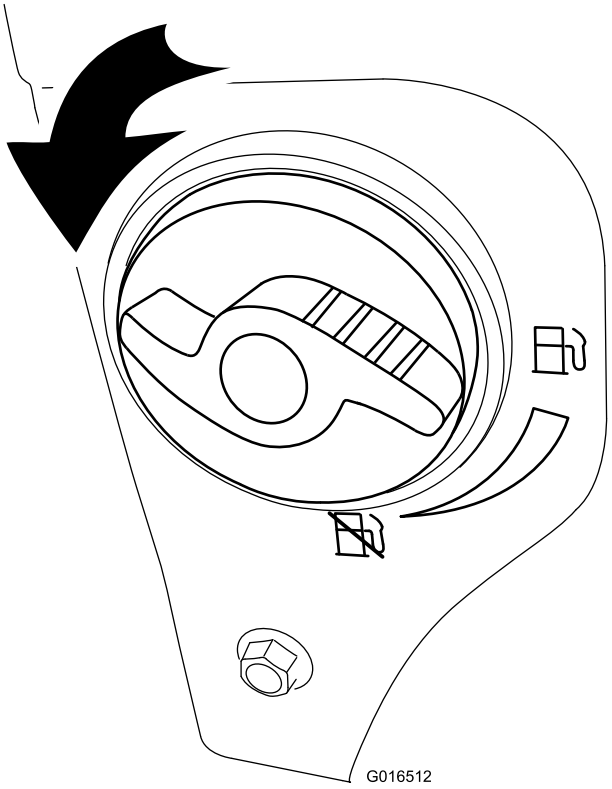

Figure 19

3. Insert the ignition key all the way in (Figure 20).

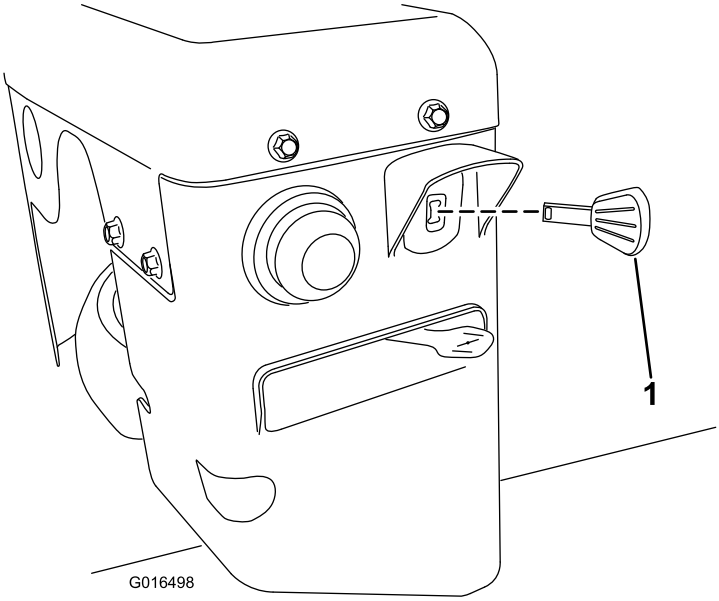

Figure 20

1. Ignition key

4. Firmly push in the primer with your thumb 3 times, holding the primer in for a second before releasing it each time (Figure 21).

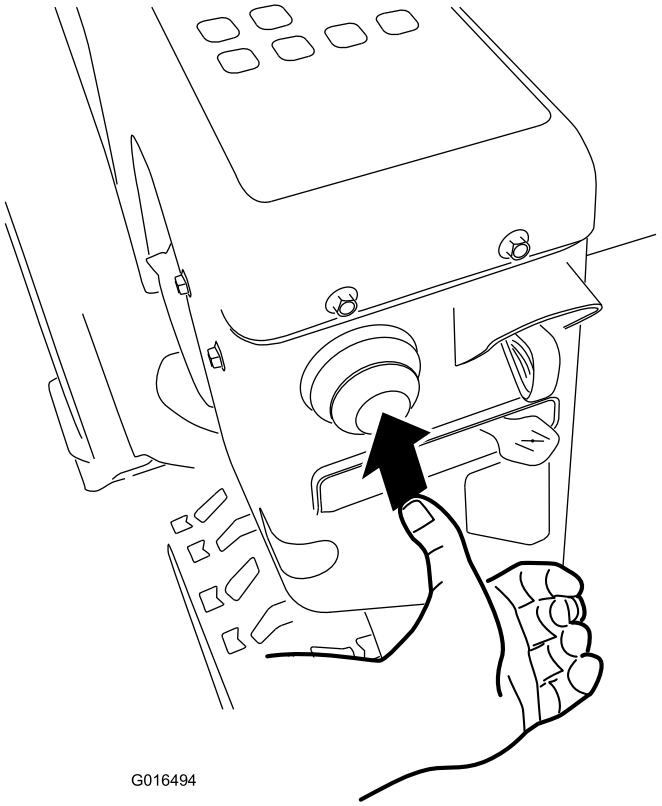

Figure 21

5. Move the choke to the CHOKE position (Figure 22).

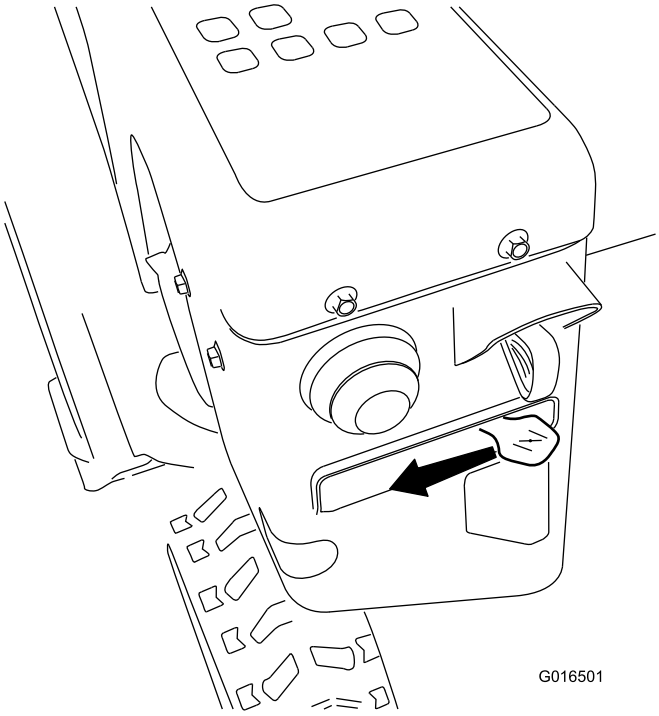

Figure 22

6. Move the throttle to the FAST position (Figure 23).

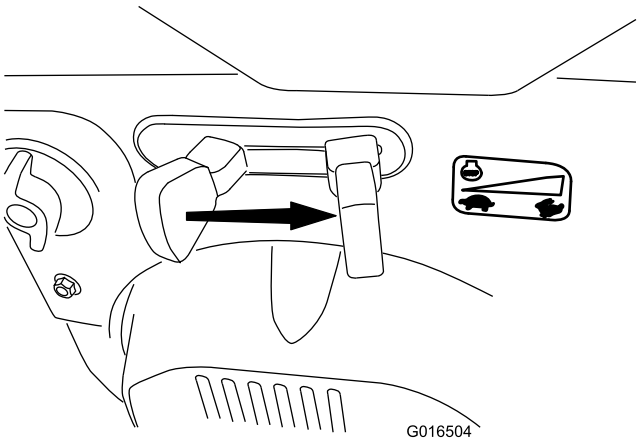

Figure 23

7. Start the machine by pulling the recoil starter or pressing the electric-starter button (Figure 24).

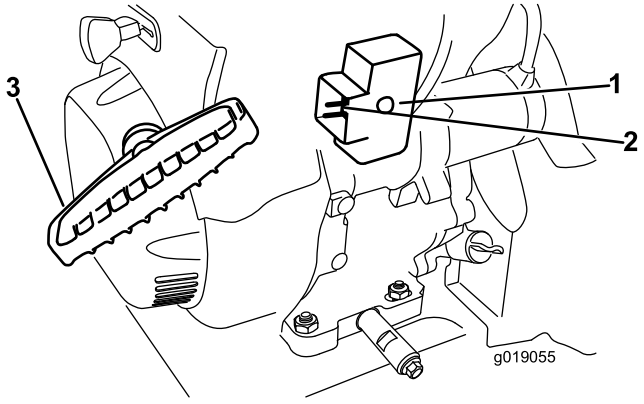

Figure 24

1. Electric-starter button
2. Electric starter plug-in
3. Recoil starter

Note: To use the electric starter, connect a power cord to the electric starter plug-in first and then to a power outlet. Use only a UL-listed, 16-gauge extension cord recommended for outdoor use that is not longer than 50 feet (15 m).

⚠ WARNING

The electrical cord can become damaged, causing a shock or fire.

Thoroughly inspect the electrical cord before using the machine. If the cord is damaged, do not operate the machine. Replace or repair the damaged cord immediately. Contact an Authorized Service Dealer for assistance.

Important: To prevent damaging the electric starter, run it in short cycles (5 seconds on, 5 seconds off), no more than 10 times. If the engine still does not start, take the machine to an Authorized Service Dealer for service.

8. Disconnect the power cord from the power outlet first and then from the machine (electric start only).
9. Allow the engine to warm up; gradually move the choke toward the Run position. Wait for the engine to run smoothly before each choke adjustment.

⚠ CAUTION

If you leave the machine plugged into a power outlet, someone can inadvertently start the machine and injure people or damage property.

Unplug the power cord whenever you are not starting the machine.

Stopping the Engine

1. Move the throttle to the SLOW position, and then to the STOP position (Figure 25) to kill the engine. The

engine can also be stopped by pulling the ignition key outward to the middle position.

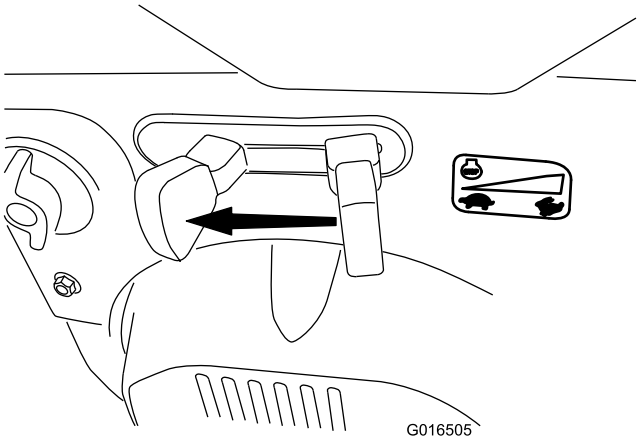

Figure 25

2. Wait for all moving parts to stop before leaving the operating position.
3. Remove the ignition key to prevent accidental starting.
4. Close the fuel shutoff valve by rotating it clockwise (Figure 26).

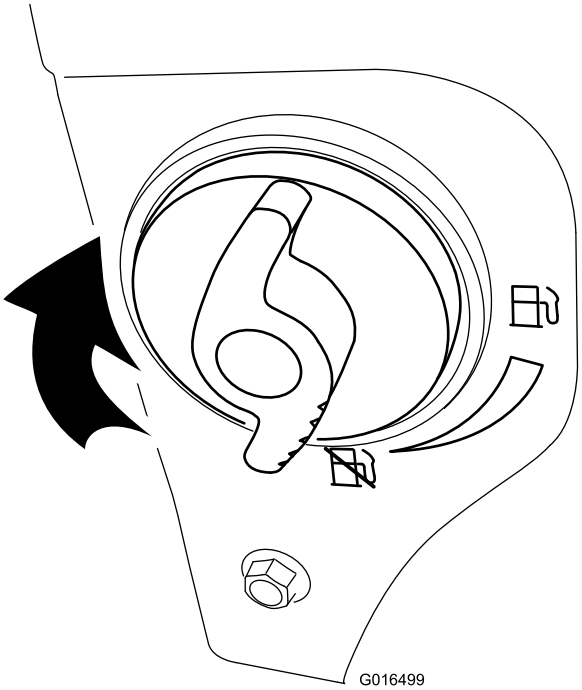

Figure 26

5. Pull the recoil starter 3 or 4 times. This helps prevent the recoil starter from freezing up.

Operating the Traction Drive

⚠ CAUTION

If the traction drive is not properly adjusted, the machine may move in the direction opposite of what you intended, causing injury and/or property damage.

Carefully check the traction drive and adjust it properly, if necessary; refer to Checking the Traction Drive Operation in Setup for more information.

Important: If the machine moves when the traction lever is in the released position, check the traction cable (refer to Checking and Adjusting the Traction Cable) or take the machine to an Authorized Service Dealer for service.

Important: To operate the traction drive, you must operate the machine with the self-propel feature engaged. Refer to Freewheeling or Using the Self-propel Drive.

1. To engage the traction drive, squeeze the left hand (traction) lever to the handgrip (Figure 27).

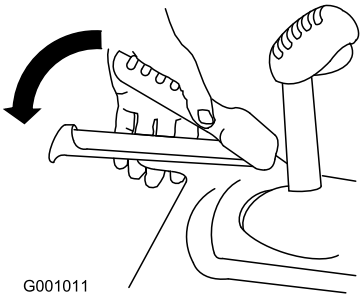

Figure 27

2. To stop the traction drive, release the traction lever.

Operating the Speed Selector

The speed selector has 6 forward and 2 reverse gears. To change speeds, release the traction lever and shift the speed selector lever to the desired position (Figure 28). The lever locks in a notch at each speed selection.

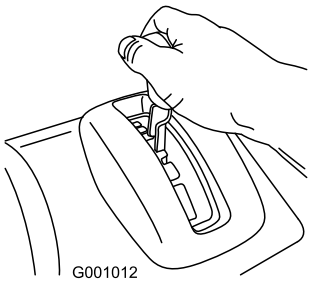

Figure 28

Operating the Auger/Impeller Drive

1. To engage the auger/ impeller drive, squeeze the right hand (auger/ impeller) lever to the handgrip (Figure 29).

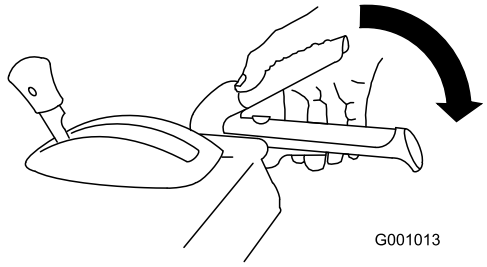

Figure 29

2. To stop the auger and impeller, release the right hand lever.

   Important: When you engage both the auger/impeller lever and the traction lever, the traction lever locks the auger/impeller lever down, freeing your right hand. To release both levers, simply release the left hand (traction) lever.

3. If the auger and impeller continue to rotate when you release the auger/impeller lever, do not operate the machine. Check the auger/impeller cable (refer to Checking and Adjusting the Auger/Impeller Cable) and adjust it if necessary. Otherwise, take the machine to an Authorized Dealer for service.

⚠ WARNING

If the auger and impeller continue to rotate when you release the auger/impeller lever, do not operate the machine, as you could seriously injure yourself or others.

Take it to an Authorized Service Dealer for service.

Operating the Quick Stick™

Hold the blue trigger cap down to use the Quick Stick to move the discharge chute and the chute deflector. Release the trigger cap to lock the discharge chute and chute deflector into position (Figure 30).

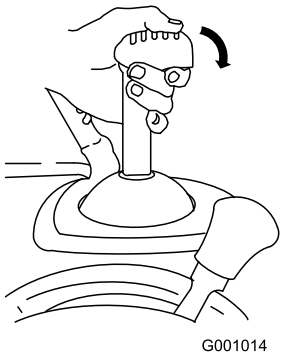

Figure 30

Moving the Discharge Chute

Hold the blue trigger cap down and move the Quick Stick to the left to move the discharge chute to the left; move the Quick Stick to the right to move the discharge chute to the right (Figure 31).

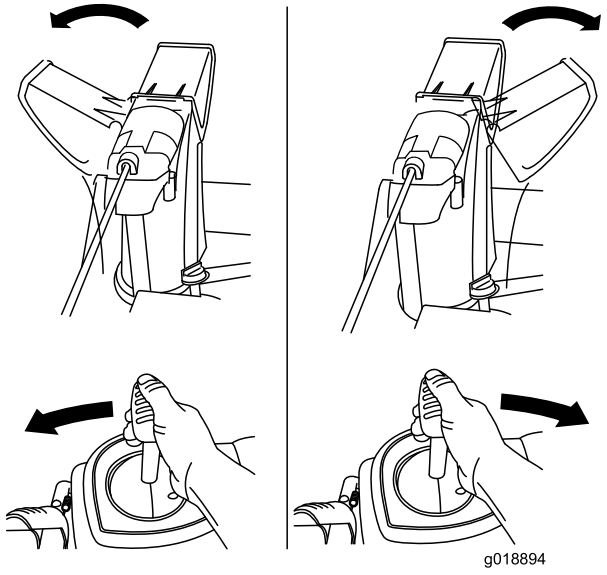

Figure 31

- If the chute does not move, refer to Adjusting the Discharge Chute Latch.
- If the chute does not turn as far to the left as it does to the right, ensure that the cable is routed to the inside of the handles. Refer to Installing the Upper Handle.
- If the chute does not lock into place when you release the trigger cap, refer to Adjusting the Discharge Chute Latch.

Moving the Chute Deflector

Hold the blue trigger cap down and move the Quick Stick forward to lower the chute deflector; move it rearward to raise the chute deflector (Figure 32).

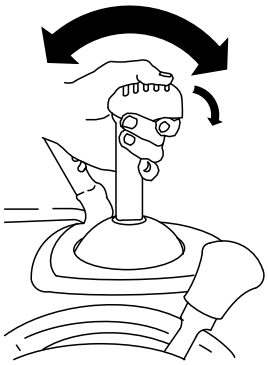

Figure 32

Unclogging the Discharge Chute

⚠ WARNING

If the auger/impeller is running but there is no snow coming out of the discharge chute, the discharge chute may be clogged.

Never use your hands to clear a clogged discharge chute. This could result in personal injury.

- To unclog the discharge chute, stay in the operating position and release the left hand (traction) lever. While running the auger/impeller, push down on the handles to raise the front of the machine a few inches (centimeters) off the pavement. Then lift the handles quickly to bump the front of the machine on the pavement. Repeat if necessary until a stream of snow comes out the discharge chute.
- If you cannot unclog the discharge chute by bumping the front of the machine, **stop the engine, wait for all moving parts to stop, and use the snow cleanout tool; never use your hand.**

  Important: Unclogging the discharge chute by bumping the front of the machine on the pavement may cause the skids to move. Adjust the skids and tighten the skid bolts securely.

Operating Tips

⚠ DANGER

When the machine is in operation, the impeller and auger rotate and can injure or amputate hands or feet.

- **Before adjusting, cleaning, inspecting, troubleshooting, or repairing the machine, stop the engine and wait for all moving parts to stop. Disconnect the wire from the spark plug and keep it away from the plug to prevent someone from accidentally starting the engine.**
- **Remove an obstruction from the discharge chute; refer to Unclogging the Discharge Chute. If necessary, use the snow cleanout tool, not your hands, to remove an obstruction from the discharge chute.**
- **Stay behind the handles and away from the discharge opening while operating the machine.**
- **Keep face, hands, feet, and any other part of your body or clothing away from concealed, moving, or rotating parts.**

⚠ WARNING

The impeller can throw stones, toys, and other foreign objects and cause serious personal injury to the operator or to bystanders.

- **Keep the area to be cleared free of all objects that the auger could pick up and throw.**
- **Keep all children and pets away from the area of operation.**
- Always set the throttle to the Fast position when throwing snow.
- If the engine slows down under a load or the wheels slip, shift the machine into a lower gear.
- If the front of the machine rides up, shift the machine into a lower gear. If the front continues to ride up, lift up on the handles.

After Operation

Safety

- Never store the machine with fuel in the fuel tank inside a building where ignition sources are present, such as hot water heaters, space heaters, or clothes dryers. Allow the engine to cool before storing in any enclosure.
- When storing the machine for more than 30 days, refer to the Storage section for important details.

Preventing Freeze-up

- In snowy and cold conditions, some controls and moving parts may freeze. **Do not use excessive force when trying to operate frozen controls.** If you have difficulty operating any control or part, start the engine and let it run for a few minutes.
- After using the machine, let the engine run for a few minutes to prevent moving parts from freezing. Engage the auger/impeller to clear any remaining snow from inside the housing. Rotate the Quick Stick to prevent it from freezing. Stop the engine, wait for all moving parts to stop, and remove all ice and snow from the machine.
- With the engine off, pull the recoil starter handle several times and push the electric-starter button once to prevent the recoil and electric starters from freezing up.

Maintenance

Note: Determine the left and right sides of the machine from the normal operating position.

Recommended Maintenance Schedule(s)

Maintenance Service Interval	Maintenance Procedure
After the first 2 hours	• Inspect the traction cable and adjust it if necessary. • Inspect the auger/impeller cable and adjust it if necessary.
After the first 5 hours	• Change the engine oil.
Before each use or daily	• Check the engine oil level and add oil if necessary.
Every 100 hours	• Replace the spark plug.
Yearly	• Check the skids and the scraper and adjust them if necessary. • Inspect the traction cable and adjust or replace it if necessary. • Inspect the auger/impeller cable and adjust or replace it if necessary. • Check the auger gearbox oil and add oil if necessary. • Change the engine oil. • Lubricate the hex shaft.
Yearly or before storage	• Check the air pressure in the tires and inflate them to 17–20 psi (116–137 kPa). • Drain the gasoline and run the engine to dry out the fuel tank and the carburetor at the end of the season. • Have an Authorized Service Dealer inspect and replace the traction drive belt and/or the auger/impeller drive belt, if necessary.

Important: **You can find more information about maintaining and servicing your machine at www.Toro.com.**

Maintenance Safety

Read the following safety precautions before performing any maintenance on the machine:

- Before performing any maintenance, service, or adjustment, stop the engine and remove the key. If major repairs are ever needed, contact an Authorized Service Dealer.
- Check all fasteners at frequent intervals for proper tightness to be sure the machine is in safe working condition.
- Maintain or replace safety and instruction labels, as necessary.
- Do not change the governor settings on the engine.
- Purchase only genuine Toro replacement parts and accessories.

Preparing for Maintenance

1. Move the machine to a level surface.
2. Stop the engine and wait for all moving parts to stop.
3. Disconnect the spark plug wire. Refer to Replacing the Spark Plug.

Checking the Engine Oil Level

Service Interval: Before each use or daily—Check the engine oil level and add oil if necessary.

1. Remove the dipstick, wipe it clean, then fully install the dipstick.
2. Remove the dipstick and check the oil level (Figure 33). If the oil level is below the Add mark on the dipstick, add oil. Refer to 5 Checking the Engine Oil Level (page 9).

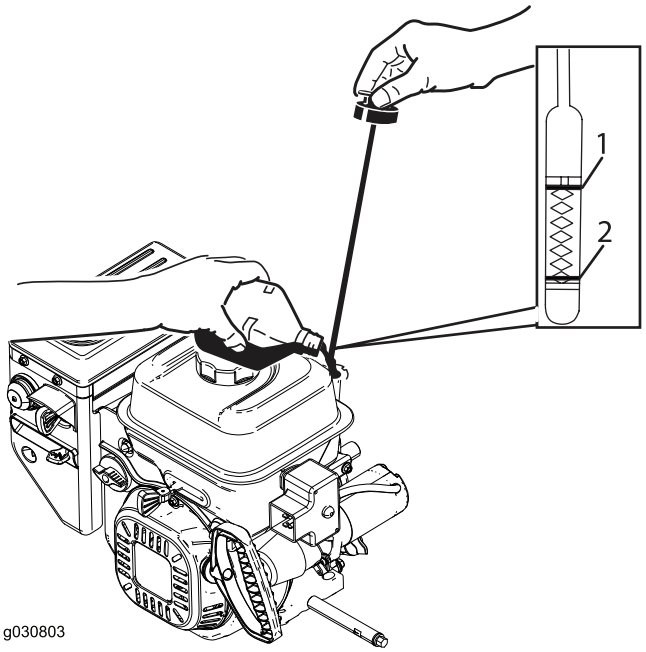

Figure 33

Checking and Adjusting the Skids and Scraper

Service Interval: Yearly—Check the skids and the scraper and adjust them if necessary.

Check the skids and the scraper to ensure that the auger does not contact the paved or gravel surface. Adjust the skids and the scraper as needed to compensate for wear.

1. Check the tire pressure. Refer to 6 Checking the Tire Pressure (page 10).
2. Loosen the nuts that secure both skids to the auger sides until the skids slide up and down easily.

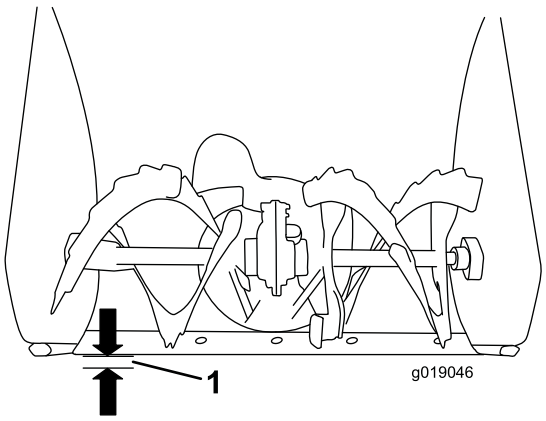

Figure 34

1. 1/8 inch (3 mm)

Important: The auger blades must be supported above the ground by the skids.

3. Ensure that the scraper is 1/8 inch (3 mm) above and parallel to a level surface.

Note: If the pavement is cracked, rough, or uneven, adjust the skids to raise the scraper. For gravel surfaces, adjust the skids further down to prevent the machine from picking up rocks.

4. Move the skids down until they are even with the ground.
5. Firmly tighten the nuts that secure both skids to the auger sides.

Note: To quickly adjust the skids if they loosen, support the scraper 1/8 inch (3 mm) off the pavement, then adjust the skids down to the pavement.

Note: If the skids become excessively worn, you can turn them over and set the unused side toward the pavement.

Checking and Adjusting the Traction Cable

Service Interval: After the first 2 hours—Inspect the traction cable and adjust it if necessary.

Yearly—Inspect the traction cable and adjust or replace it if necessary.

If the machine does not drive in the forward or reverse speeds or it drives when you release the traction lever, adjust the traction cable.

If the left hand (traction) cable is not properly adjusted, do the following steps:

1. Loosen the jam nut.
2. Engage the traction lever and hold it in place (Figure 35).

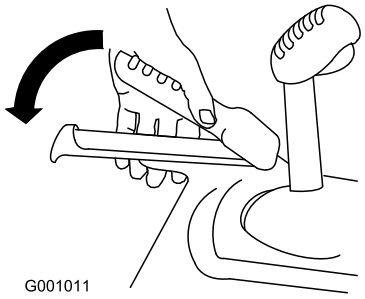

Figure 35

3. Loosen or tighten the turnbuckle to adjust spring length to 2.18 inches (5.5 cm) (Figure 36).

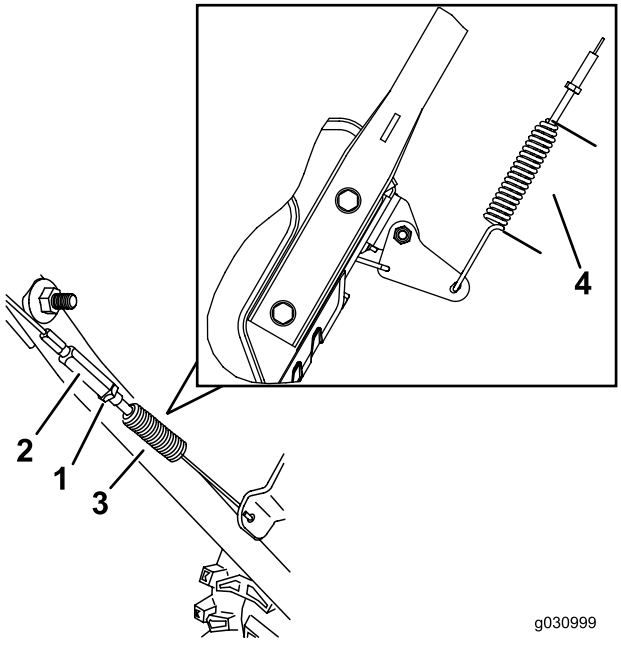

Figure 36

1. Jam nut
2. Turnbuckle
3. Spring
4. 2.18 inches (5.5 cm)

4. Tighten the jam nut (Figure 36), ensuring there is slight tension on the cable.
5. If the traction cable is properly adjusted but a problem remains, contact an Authorized Service Dealer.

Checking and Adjusting the Auger/Impeller Cable

Service Interval: After the first 2 hours—Inspect the auger/impeller cable and adjust it if necessary.

Yearly—Inspect the auger/impeller cable and adjust or replace it if necessary.

1. Loosen the jam nut.
2. Engage the auger/impeller lever and hold it in place (Figure 37).

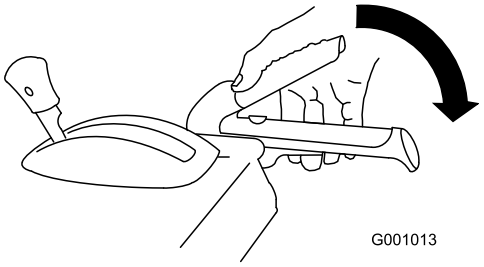

Figure 37

3. Loosen or tighten the turnbuckle to adjust the spring length to 2.75 inches (7 cm) (Figure 38)

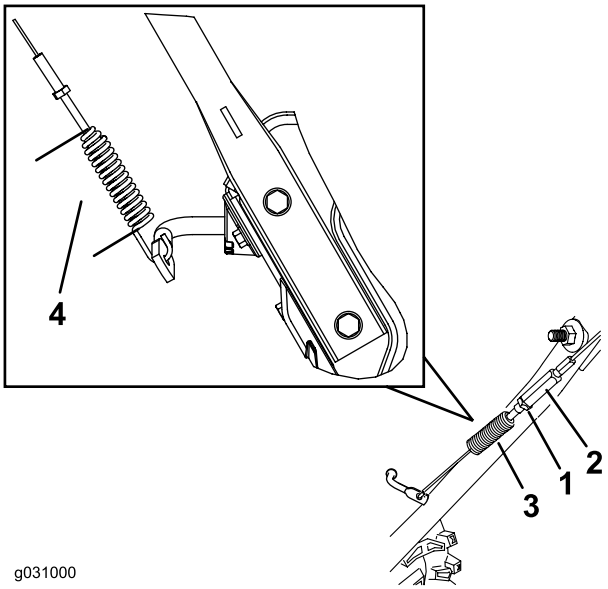

Figure 38

1. Jam nut
2. Turnbuckle
3. Spring
4. 2.75 inches (7 cm)

4. Tighten the jam nut (Figure 38), ensuring there is slight tension on the cable.

5. If the auger/impeller cable is properly adjusted but a problem remains, contact an Authorized Service Dealer.

Checking the Auger Gearbox Oil Level

Service Interval: Yearly—Check the auger gearbox oil and add oil if necessary.

1. Move the machine to a level surface.
2. Clean the area around the pipe plug (Figure 39).

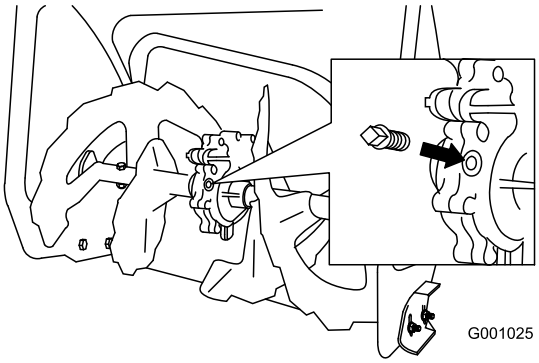

Figure 39

3. Remove the pipe plug from the gearbox.
4. Check the oil level in the gearbox. The oil should be 3/8 inch (9.5 mm) below the filler opening.
5. If the oil level is low, add GL-5 or GL-6, SAE 80-90 EP gear oil lubricant to the gearbox until the oil level is 3/8 inch below the filler opening.

   Note: Do not use synthetic oil.
6. Install the pipe plug in the gearbox.

Changing the Engine Oil

Service Interval: After the first 5 hours—Change the engine oil.

Yearly—Change the engine oil.

If possible, run the engine just before changing the oil because warm oil flows better and carries more contaminants.

Use automotive detergent oil with an API service classification of SF, SG, SH, SJ, SL, or higher. Refer to your engine owner's manual.

Use Figure 40 below to select the best oil viscosity for the outdoor temperature range expected:

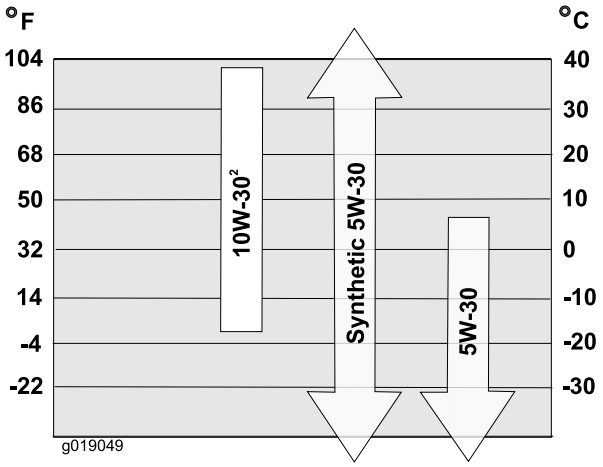

Figure 40

Engine Oil Capacities

Model	Engine Oil Capacity
37781	0.7 L (24 oz)

1. Clean the area around the oil drain cap (Figure 41).

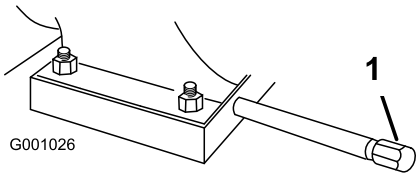

Figure 41

1. Oil drain cap

2. Slide an oil drain pan under the drain extension and remove the oil drain cap.
3. Drain the oil.

   Note: Dispose of the used oil properly at a local recycling center.
4. Install the oil drain cap.
5. Fill the crankcase with oil. Refer to Filling the Engine Crankcase with Oil.

Lubricating the Hex Shaft

Service Interval: Yearly—Lubricate the hex shaft.

Lightly lubricate the hex shaft yearly with automotive engine oil (Figure 42).

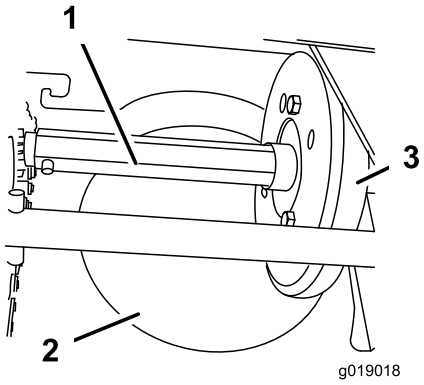

Figure 42

1. Hex shaft
2. Steel friction pulley
3. Rubber wheel

Important: Do not get oil on the rubber wheel or the steel friction pulley because the traction drive will slip (Figure 42).

1. Drain the gasoline from the fuel tank.
2. Tip the machine forward onto its auger housing and block it so that it cannot fall.
3. Remove the back cover (Figure 43).

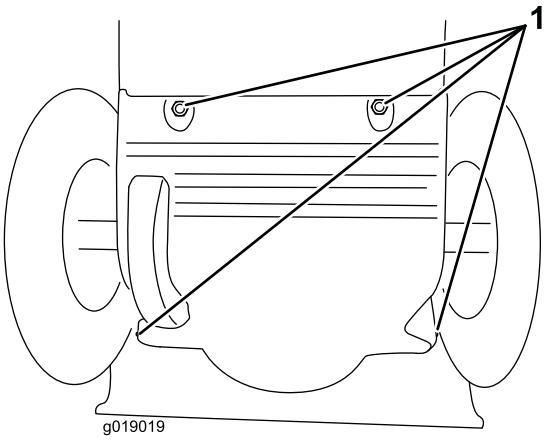

Figure 43

1. Screws

4. Move the speed selector lever to Position R2.
5. Dip your finger in automotive engine oil and **lightly** lubricate hex shaft.
6. Move the speed selector lever to Position 6.
7. Lubricate the other end of the hex shaft.
8. Move the speed selector lever forward and rearward a few times.
9. Install the back cover and return the machine to the operating position.

Replacing the Spark Plug

Service Interval: Every 100 hours—Replace the spark plug.

⚠ WARNING

Replacing the spark plug while the engine is hot can result in burns.

Wait until the engine is cool to replace the spark plug.

Use a Toro spark plug or equivalent (Champion® RN9YC or NGK BPR6ES).

1. Remove the boot (Figure 44).

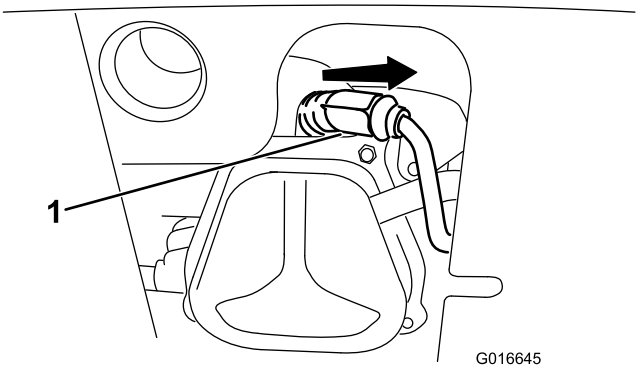

Figure 44

1. Spark plug boot

2. Clean around the base of the spark plug.

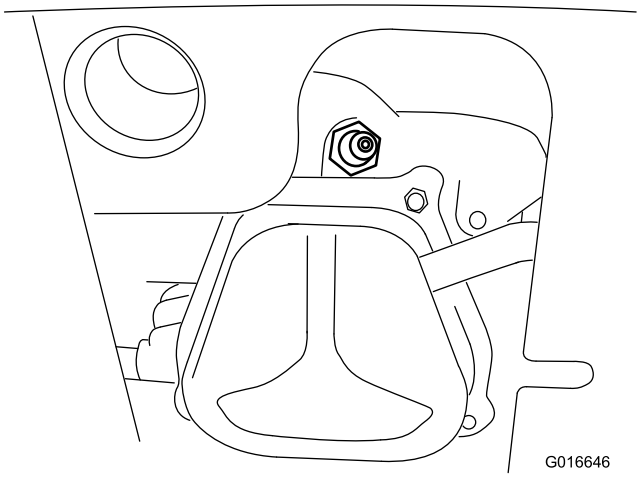

Figure 45

3. Remove and discard the old spark plug.

   Note: You will need a ratchet wrench extension to remove the spark plug.
4. Set the gap between the electrodes on a new spark plug at 0.030 inch (0.76 mm) (Figure 46).

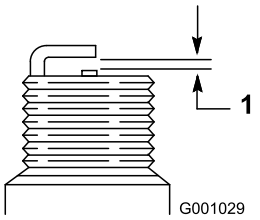

Figure 46

1. 0.030 inch (0.76 mm)

5. Install the new spark plug, tighten it firmly, and attach the ignition wire to the spark plug.

   Note: Ensure the ignition wire snaps completely into place on the spark plug.

Adjusting the Discharge Chute Latch

If the discharge chute does not lock into the desired position or does not unlock so that you can move it to another position, adjust the discharge chute latch.

1. Loosen the clamp fastener on the chute support plate until the cable is free.

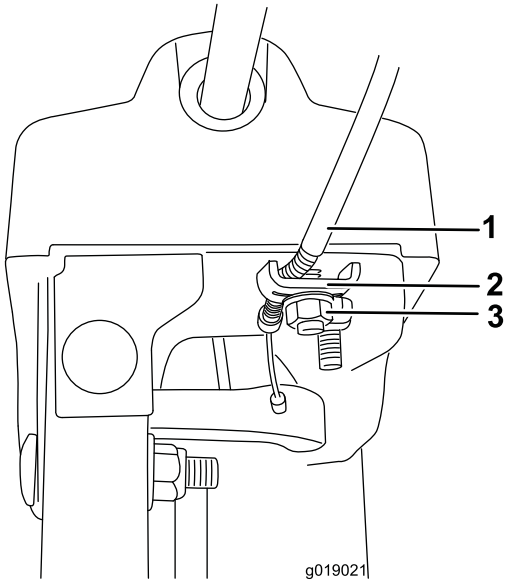

Figure 47

1. Cable conduit
2. Cable clamp
3. Clamp fastener

2. Remove any slack in the cable by pulling the cable conduit rearward.
3. Tighten the clamp fastener while holding the cable in place.

Replacing the Drive Belts

If the auger/impeller drive belt or the traction drive belt becomes worn, oil-soaked, or otherwise damaged, have an Authorized Service Dealer replace the belt.

Storage

⚠ WARNING

- **Gasoline vapors can explode.**
- **Do not store gasoline more than 30 days.**
- **Do not store the machine in an enclosure near an open flame.**
- **Allow the engine to cool before storing it.**

Preparing the Machine for Storage

1. On the last refueling of the year, add fuel stabilizer to fresh fuel as directed by the engine manufacturer.

   Note: Fuel should not be stored longer than suggested by the fuel stabilizer manufacturer.

2. Run the engine for 10 minutes to distribute the conditioned fuel through the fuel system.
3. Run the machine until the engine runs out of fuel.
4. Prime the engine and start it again.
5. Allow the engine to run until it stops. When you can no longer start the engine, it is sufficiently dry.
6. Stop the engine and allow it to cool.
7. Remove the ignition key.
8. Clean the machine thoroughly.
9. Touch up chipped surfaces with paint available from an Authorized Service Dealer. Sand affected areas before painting, and use a rust preventative to prevent the metal parts from rusting.
10. Tighten all loose screws, bolts, and locknuts. Repair or replace any damaged parts.
11. Cover the machine and store it in a clean, dry place out of the reach of children.

Removing the Machine from Storage

1. Remove the spark plug and spin the engine rapidly using the starter to blow the excess oil from the cylinder.
2. Install the spark plug and tighten it firmly.
3. Connect the spark plug wire.
4. Perform the annual maintenance procedures as given in the Recommended Maintenance Schedule.

Troubleshooting

Problem	Possible Cause	Corrective Action
Electric starter does not turn (electric-start models only)	1. The power cord is disconnected at the outlet or the machine. 2. The power cord is worn, corroded, or damaged. 3. The power outlet is not energized.	1. Connect the power cord to the outlet and/or the machine. 2. Replace the power cord. 3. Have a qualified electrician energize the outlet.
Engine does not start or starts hard	1. The key is not in the ignition or is in the Stop position. 2. The choke is in the Off position and the primer has not been pressed. 3. The fuel shutoff valve is not open. 4. The throttle is not in the Fast position. 5. The fuel tank is empty or the fuel system contains stale fuel. 6. The spark plug wire is loose or disconnected. 7. The spark plug is pitted, fouled, or the gap is incorrect. 8. The fuel vent cap is restricted. 9. The engine oil level in the engine crankcase is too low or too high.	1. Insert the key into the ignition and turn it to the On position. 2. Move the choke to the On position and press the primer 3 times. 3. Open the fuel shutoff valve. 4. Move the throttle to the Fast position. 5. Drain and/or fill the fuel tank with fresh gasoline (not more than 30 days old). If the problem persists, contact an Authorized Service Dealer. 6. Connect the wire to the spark plug. 7. Check the spark plug and adjust the gap if necessary. Replace the spark plug if it is pitted, fouled, or cracked. 8. Remove the vent restriction or replace the fuel cap. 9. Add or drain oil to adjust the oil level in the engine crankcase to the Full mark on the dipstick.
Engine runs rough	1. The choke is in the On position. 2. The fuel shutoff valve is not completely open. 3. The fuel tank is nearly empty or contains stale fuel. 4. The spark plug wire is loose. 5. The spark plug is pitted, fouled, or the gap is incorrect. 6. The engine oil level in the engine crankcase is too low or too high.	1. Move the choke to the Off position. 2. Open the fuel shutoff valve. 3. Drain and fill the fuel tank with fresh gasoline (not more than 30 days old). If the problem persists, contact an Authorized Service Dealer. 4. Connect the wire to the spark plug. 5. Check the spark plug and adjust the gap if necessary. Replace the spark plug if it is pitted, fouled, or cracked. 6. Add or drain oil to adjust the oil level in the engine crankcase to the Full mark on the dipstick.

Problem	Possible Cause	Corrective Action
Engine runs, but the machine discharges snow poorly or not at all	1. The throttle is not in the Fast position when throwing snow.	1. Move the throttle to the Fast position.
	2. The machine is moving too fast to clear the snow.	2. Shift the machine into a lower gear.
	3. You are trying to remove too much snow per swath.	3. Reduce the amount of snow removed per swath.
	4. You are trying to remove extremely heavy or wet snow.	4. Don't overload the machine with extremely heavy or wet snow.
	5. The discharge chute is plugged.	5. Unclog the discharge chute.
	6. The auger/impeller drive belt is loose or is off the pulley.	6. Install and/or adjust the auger/impeller drive belt; refer to www.Toro.com for servicing information or take the machine to an Authorized Service Dealer.
	7. The auger/impeller drive belt is worn or broken.	7. Replace the auger/impeller drive belt; refer to www.Toro.com for servicing information or take the machine to an Authorized Service Dealer.
Discharge chute either does not lock into place or does not move	1. The discharge chute latch is not properly adjusted.	1. Adjust the discharge chute latch.
The machine does not properly clear the snow off the surface	1. The skids and/or scraper are not properly adjusted.	1. Adjust the skids and/or the scraper.
	2. The pressure in the tires is not equal.	2. Check and adjust the pressure in one or both tires.

Notes:

Emission Control Warranty Statement

For the United States, California, and Canada

374-0299

Your Warranty Rights and Obligations

The California Air Resources Board (CARB), the U.S. Environmental Protection Agency (EPA), and The Toro Company, are pleased to explain the emission control system warranty on your 2015–2016 small off-road engine/equipment. In California and the United States, new small off-road engines/equipment must be designed, built, and certified to meet stringent anti-smog standards. The Toro Company warrants the emission control system on your small off-road engine/equipment for the period of time listed below, provided there has been no abuse, neglect, or improper maintenance of your small off-road engine/equipment.

Your emission control system may include parts such as the carburetor, fuel-injection system, the ignition system, catalytic converter, fuel tanks, fuel lines, fuel caps, valves, canisters, filters, vapor hoses, clamps, connectors, and other associated emission-related components.

Where a warrantable condition exists, The Toro Company will repair your small off-road engine/equipment at no cost to you including diagnosis, parts and labor.

Manufacturer's Warranty Coverage

This emission control system is warranted for two years. If any emission-related part on your engine/equipment is defective, the part will be repaired or replaced by The Toro Company.

Owner Responsibilities

As the small off-road engine owner, you are responsible for the performance of the required maintenance listed in your *Operator's Manual*. We recommend that you retain all receipts covering maintenance on your small off-road engine/equipment, but we cannot deny warranty solely for the lack of receipts.

As the small off-road engine/equipment owner, you should however be aware that we may deny you warranty coverage if your small off-road engine/equipment or a part has failed due to abuse, neglect, improper maintenance or unapproved modifications.

You are responsible for presenting your small off-road engine/equipment to a Toro Distribution Center or Service Center as soon as a problem exists. The warranty repairs should be completed in a reasonable amount of time, not to exceed thirty (30) days.

If you have any questions regarding your warranty coverage, contact us at:

Customer Care Department, Consumer Division
Toro Warranty Company
8111 Lyndale Avenue South
Bloomington, MN 55420-1196
1–952–948–4027 (U.S. and Canadian customers)
email Customer Support at: www.toro.com

General Emissions Warranty Coverage

The Toro Company warrants to the ultimate purchaser and each subsequent purchaser that the small off-road engine/equipment is:

- Designed, built, and certified to conform with all applicable emissions regulations; and
- Free from defects in materials and workmanship that could cause the failure of a warranted part; and
- Identical in all material respects to the parts as described in the application for certification.

The warranty period begins on the date the small off-road engine/equipment is delivered to an ultimate purchaser. The warranted period is two years.

Subject to certain conditions and exclusions as stated below, the warranty on evaporative emissions-related parts is as follows:

1. Any warranted part that is not scheduled for replacement as required maintenance in the written instructions supplied, is warranted for the warranty period stated above. If the part fails during the period of warranty coverage, the part will be repaired or replaced by The Toro Company. Any such part repaired or replaced under warranty will be warranted for the remainder of the warranty period.
2. Any warranted part that is scheduled only for regular inspection in the written instructions supplied is warranted for the warranty period stated above. Any such part repaired or replaced under the warranty will be warranted for the remainder of the warranty period.
3. Any warranted part that is scheduled for replacement as required maintenance in the written instructions supplied is warranted for the period of time before the first scheduled replacement date for that part. If the part fails before the first scheduled replacement, the part will be repaired or replaced by The Toro Company. Any such part repaired or replaced under warranty will be warranted for the remainder of the period prior to the first scheduled replacement point for the part.
4. Repair or replacement of any warranted part under the warranty provisions herein must be performed at an Authorized Service Dealer at no charge to the owner.
5. Warranty services or repairs will be provided at all Service Dealers authorized to service the subject engines or equipment.
6. The small off-road engine/equipment owner will not be charged for diagnostic labor that is directly associated with diagnosis of a defective, emission-related warranted part, provided that such diagnostic work is performed at an Authorized Service Dealer.
7. The Toro Company is liable for damages to other engine/equipment components caused by a failure under warranty of any warranted part.
8. Throughout the small off-road engine/equipment warranty period stated above, The Toro Company will maintain a supply of warranted parts sufficient to meet the expected demand for such parts.
9. Manufacturer approved replacement parts may be used in the performance of any warranty maintenance or repairs and must be provided without charge to the owner. Such use will not reduce the warranty obligations of The Toro Company.
10. Add-on or modified parts that are not approved by The Toro Company may not be used. The use of a non-approved add-on or modified parts by the purchaser will be grounds for disallowing a warranty claim. The Toro Company will not be liable to warrant failures of warranted parts caused by the use of an non-approved add-on or modified parts.

Warranted Parts

The following emission warranty parts are covered, to the extent these parts were present on the Toro engine/equipment and/or Toro supplied fuel system:

1. Fuel System Parts
    - Carburetor and internal parts
    - Cold starting enrichment (primer or choke)
    - Fuel pump
    - Fuel line, fittings, and clamps
    - Fuel tank, cap, and tether
    - Carbon canister
2. Air Induction System
    - Air cleaner
    - Intake manifold
    - Crankcase vent and line(s)
    - Purge line and fittings
3. Ignition System
    - Spark plug(s) and wire(s)
    - Magneto ignition system
4. Catalytic Exhaust System
    - Catalytic converter
    - Exhaust manifold
    - Air injector system and valve(s)
5. Miscellaneous Items Used in Emission Control System
    - Valves, switches, and linkages
    - Connectors, fittings, and brackets

The Toro Warranty

A Three-Year Limited Warranty (45 Day Limited Warranty for Commercial Use)

Power Max HD and
Power Max
Two-Stage Snowthrowers

Conditions and Products Covered

The Toro Company and its affiliate, Toro Warranty Company, pursuant to an agreement between them, jointly promise to repair the Toro Product listed below if used for residential purposes*, if defective in materials or workmanship or if it stops functioning due to the failure of a component for the period listed below.

This warranty covers the cost of parts and labor, but you must pay transportation costs.

The following time periods apply from the original date of purchase:

Products	**Warranty Period`**
Power Max HD and Power Max Snowthrowers and Attachments	3 years
— Power Max HD and Power Max Chute	Lifetime (original owner only) [1]
— Power Max HD and Power Max Deflector	Lifetime (original owner only) [1]
— Power Max HD and Power Max Anti-Clogging System (Plastic Impeller Housing cover)	Lifetime (original owner only) [1]

[6]Lifetime Frame Warranty - If the main frame, consisting of the parts welded together to form the tractor structure that other components such as the engine are secured to, cracks or breaks in normal use, it will be repaired or replaced, at Toro's option, under warranty at no cost for parts and labor. Frame failure due to misuse or abuse and failure or repair required due to rust or corrosion are not covered.

Limited Warranty for Commercial Use

Gas-powered Toro Products used for commercial, institutional, or rental use, are warranted for 45 days against defects in materials or workmanship. Components failing due to normal wear are not covered by this warranty.

Instructions for Obtaining Warranty Service

If you think that your Toro Product contains a defect in materials or workmanship, follow this procedure:

1. Contact any Authorized Toro Service Dealer to arrange service at their dealership. To locate a dealer convenient to you, access our web site at www.Toro.com. You may also call the numbers listed in item #3 to use the 24-hour Toro Dealer locator system.
2. Bring the product and your proof of purchase (sales receipt) to the Service Dealer. The dealer will diagnose the problem and determine if it is covered under warranty.
3. If for any reason you are dissatisfied with the Service Dealer's analysis or with the assistance provided, contact us at:

   Toro Warranty Company
   Customer Care Department, RLC Division
   8111 Lyndale Avenue South
   Bloomington, MN 55420-1196
   Toll free at 866-336-5205 (U.S. customers)
   Toll free at 866-854-9033 (Canadian customers)

Owner Responsibilities

You must maintain your Toro Product by following the maintenance procedures described in the *Operator's Manual*. Such routine maintenance, whether performed by a dealer or by you, is at your expense.

Items and Conditions Not Covered

There is no other express warranty except for special emission system coverage and engine warranty coverage on some products. This express warranty does not cover the following:

- Cost of regular maintenance service or replacement of wear parts, such as blades, rotor blades (paddles), scraper blades, belts, fuel, lubricants, oil changes, spark plugs, light bulbs, cable/linkage or brake adjustments
- Any product or part which has been altered or misused or neglected or requires replacement or repair due to accidents or lack of proper maintenance
- Pickup and delivery charges
- Operational misuse, neglect, or accidents
- Repairs or attempted repairs by anyone other than an Authorized Toro Service Dealer
- Repairs necessary due to failure to follow recommended fuel procedure (consult *Operator's Manual* for more details)
  - Removing contaminants from the fuel system is not covered
  - Use of old fuel (more than one month old) or fuel which contains more than 10% ethanol or more that 15% MTBE
  - Failure to drain the fuel system prior to any period of non-use over one month

General Conditions

All repairs covered by these warranties must be performed by an Authorized Toro Service Dealer using Toro approved replacement parts. Repair by an Authorized Toro Service Dealer is your sole remedy under this warranty.

Neither The Toro Company nor Toro Warranty Company is liable for indirect, incidental, or consequential damages in connection with the use of the Toro Products covered by these warranties, including any cost or expense of providing substitute equipment or service during reasonable periods of malfunction or non-use pending completion of repairs under these warranties.

All implied warranties of merchantability (that the product is fit for ordinary use) and fitness for use (that the product is fit for a particular purpose) are limited to the duration of the express warranty.

Some states do not allow exclusions of incidental or consequential damages, or limitations on how long an implied warranty lasts, so the above exclusions may not apply to you.

This warranty gives you specific legal rights, and you may also have other rights which vary from state to state.

Countries Other than the United States or Canada

Customers who have purchased Toro products exported from the United States or Canada should contact their Toro Distributor (Dealer) to obtain guarantee policies for your country, province, or state. If for any reason you are dissatisfied with your Distributor's service or have difficulty obtaining guarantee information, contact the Toro importer. If all other remedies fail, you may contact us at Toro Warranty Company.

Australian Consumer Law

Australian customers will find details relating to the Australian Consumer Law either inside the box or at your local Toro Dealer.

*Residential purposes means use of the product on the same lot as your home. Use at more than one location, or institutional or rental use, is considered commercial use, and the commercial use warranty would apply.