Form No. 3396-746 Rev A

Power Max Heavy Duty 926/1028 OXE Snowthrower

Model No. 38820—Serial No. 316000001 and Up

Model No. 38824—Serial No. 316000001 and Up

Operator's Manual

This product complies with all relevant European directives. For details, see the separate product specific Declaration of Conformity (DOC) sheet.

Introduction

This machine is intended to be used by residential homeowners or professional, hired operators. It is designed for removing snow from paved surfaces, such as driveways and sidewalks, and other surfaces for traffic on residential or commercial properties. It is not designed for removing materials other than snow.

Read this information carefully to learn how to operate and maintain your machine properly and to avoid injury and machine damage. You are responsible for operating the machine properly and safely.

You may contact Toro directly at www.Toro.com for machine and accessory information, help finding a dealer, or to register your machine.

Whenever you need service, genuine Toro parts, or additional information, contact an Authorized Service Dealer or Toro Customer Service and have the model and serial numbers of your machine ready. Figure 1 identifies the location of the model and serial numbers on the machine. Write the numbers in the space provided.

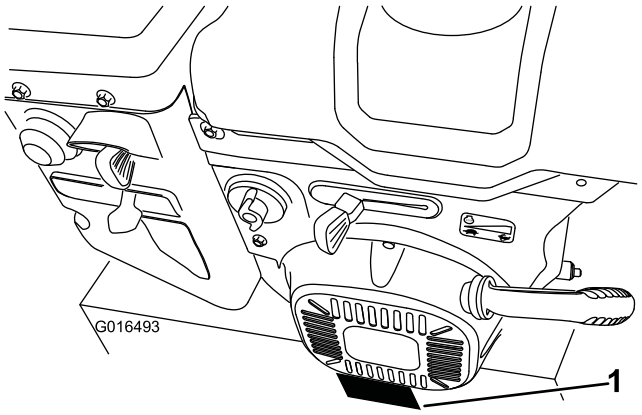

Figure 1

1. Model and serial number location

Model No. _____

Serial No. _____

This manual identifies potential hazards and has safety messages identified by the safety alert symbol (Figure 2), which signals a hazard that may cause serious injury or death if you do not follow the recommended precautions.



Figure 2

1. Safety alert symbol

This manual uses 2 words to highlight information. **Important** calls attention to special mechanical information and **Note** emphasizes general information worthy of special attention.

© 2015—The Toro® Company
8111 Lyndale Avenue South
Bloomington, MN 55420

Register at www.Toro.com.

CE

Original Instructions (EN)
Printed in the USA
All Rights Reserved

3396-746 A

This spark ignition system complies with Canadian ICES-002.

Contents

Introduction 1
Safety 2
Sound Pressure 2
Sound Power 2
Vibration 2
Safety and Instructional Decals 3
Setup 5
1 Installing the Upper Handle 6
2 Installing the Wheel Clutch Cable Ends 6
3 Installing the Traction Control Linkage 7
4 Installing the Chute Control Rod 8
5 Connecting the Wire to the Headlight 9
6 Filling the Engine with Oil 9
7 Checking the Tire Pressure 10
8 Checking the Skids and Scraper 10
9 Checking the Traction Drive Operation 10
Product Overview 12
Operation 12
Before Operation 12
Safety 12
Filling the Fuel Tank 12
During Operation 13
Safety 13
Starting the Engine 14
Stopping the Engine 16
Operating the Traction Drive 16
Using the Wheel Clutch Levers 16
Operating the Speed Selector 17
Operating the Auger/Impeller Drive 17
Operating the Quick Stick® 18
Unclogging the Discharge Chute 18
Operating Tips 19
After Operation 19
Safety 19
Preventing Freeze-up 19
Maintenance 20
Recommended Maintenance Schedule(s) 20
Maintenance Safety 20
Preparing for Maintenance 20
Checking the Engine Oil Level 20
Checking and Adjusting the Skids 21
Checking and Adjusting the Traction Cable 21
Checking the Auger Gearbox Oil Level 22
Changing the Engine Oil 22
Replacing the Spark Plug 23
Adjusting the Discharge Chute Latch 23
Replacing the Drive Belts 24
Replacing the Headlight Bulb 24
Storage 25
Preparing the Machine for Storage 25
Removing the Machine from Storage 25
Troubleshooting 26

Safety

This machine meets or exceeds the ISO 8437 specifications of the International Standards Organization in effect at the time of production.

- Shut the machine off before unclogging, servicing, or fueling.
- Read and understand the contents of the manual before you start the engine. Make sure everyone using this product knows how to use the product and understands the warnings.
- Do not put hands or feet near moving components on the machine.
- Do not operate machine without all guards and other safety protective devices in place and working on the machine.
- Keep clear of any discharge opening. Keep bystanders a safe distance from the machine.
- Keep children out of the operating area and under the watchful care of a responsible adult other than the operator. Never allow children to operate the machine.

Sound Pressure

This machine has a sound pressure level at the operator's ear of 88 dBA (model 38820) and 89 dBA (model 38824). The sound pressure level was determined according to the procedures outlined in EN ISO 11201.

Sound Power

This machine has a guaranteed sound power level of 103 dBA (model 38820) and 105 dBA (model 38824). The sound power level was determined according to the procedures outlined in EN ISO 3744.

⚠ CAUTION

Long-term exposure to noise while operating the machine may cause some hearing loss.

Wear adequate hearing protection whenever you operate the machine for an extended period of time.

Vibration

Measured vibration level for the left hand = 3.8 m/s^2 (model 38820) and 4.7 m/s^2 (model 38824).

Measured vibration level for the right hand = 4.8 m/s^2 (model 38820) and 5.6 m/s^2 (model 38824).

The measured values were determined according to the procedures outlined in EN ISO 20643.

Safety and Instructional Decals

Important: **Safety and instruction decals are located near areas of potential danger. Replace damaged decals.**

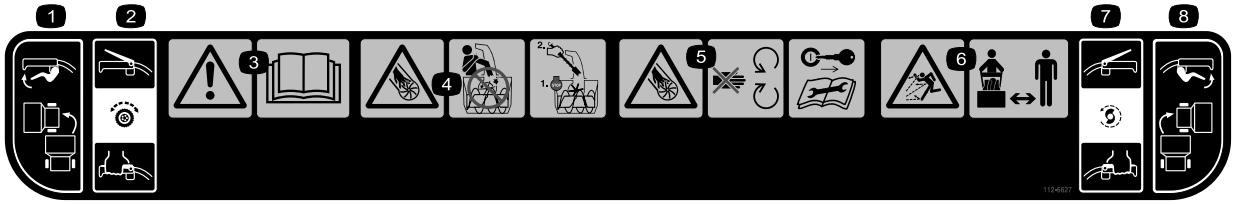

112-6627

1. Left turn control
2. Traction drive—squeeze the lever to engage; release the lever to disengage.
3. Warning—read the *Operator's Manual.*
4. Cutting/dismemberment hazard, impeller—do not place your hand in the chute; stop the engine before leaving the operator's position, use the tool to clear the chute.
5. Cutting/dismemberment hazard, impeller—keep away from moving parts; remove the ignition key and read the instructions before servicing or performing maintenance.
6. Thrown object hazard—keep bystanders a safe distance from the snowthrower.
7. Auger/impeller drive—squeeze the lever to engage; release the lever to disengage.
8. Right turn control

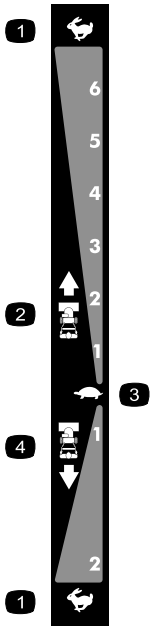

106-4525

Order part no. 112-6633

1. Fast
2. Forward speeds
3. Slow
4. Reverse speeds



107-3040

1. Cutting dismemberment, impeller and cutting dismemberment, auger hazards—keep bystanders a safe distance from the snowthrower.

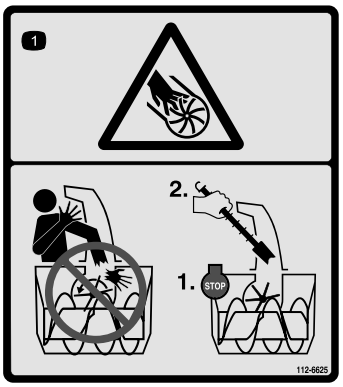

112-6625

Reorder part no. 112-6629

1. Cutting/dismemberment hazard, impeller—do not place your hand in the chute; stop the engine before leaving the operator's position, use the tool to clear the chute.

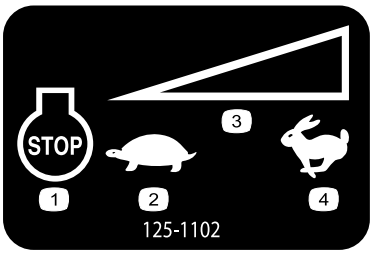

125–1102

1. Engine stop
2. Slow
3. Variable speed control
4. Fast

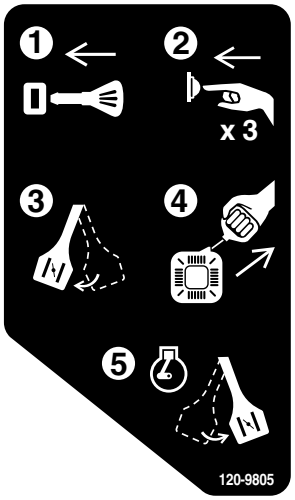

120-9805

1. Insert the key.
2. Prime the engine 3 times.
3. Engage the choke.
4. Pull the starter cord.
5. Once the engine is running, disengage the choke.

Setup

Loose Parts

Use the chart below to verify that all parts have been shipped.

Procedure	Description	Qty.	Use
1	Handle bolts Curved washers Locknuts	4 4 4	Install the upper handle.
2	No parts required	–	Install the wheel clutch cable ends
3	No parts required	–	Install the traction control linkage.
4	Carriage bolts Locknuts	2 2	Install the chute control rod.
5	Cable tie	1	Connect the wire to the headlight.
6	No parts required	–	Fill the engine with oil.
7	No parts required	–	Check the tire pressure.
8	No parts required	–	Check the skids and scraper.
9	No parts required	–	Check the operation of the traction drive.

1

Installing the Upper Handle

Parts needed for this procedure:

4	Handle bolts
4	Curved washers
4	Locknuts

Procedure

Note: Do not remove the rubber band on the cables until you have installed the upper handle.

1. Lift and rotate the upper handle and position it over the lower handle (Figure 3).

   Important: Route the cables attached to the Quick Stick inside the upper handle legs and ensure that the cables and the wire for the headlight are not pinched between the handle sections.

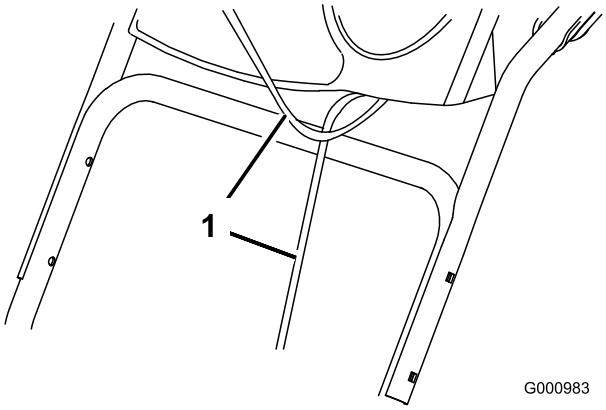

Figure 3

1. Cables

2. Secure the upper handle with 4 handle bolts, 4 curved washers, and 4 locknuts from the loose parts bag (Figure 4).

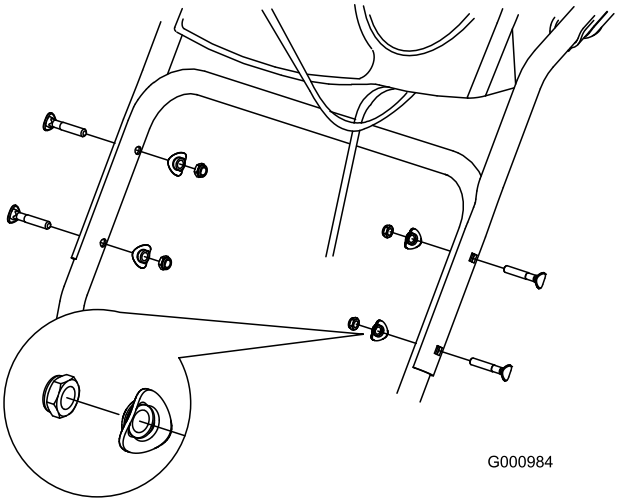

Figure 4

2

Installing the Wheel Clutch Cable Ends

No Parts Required

Procedure

1. Unwrap the cable ends from the lower handle (Figure 5).

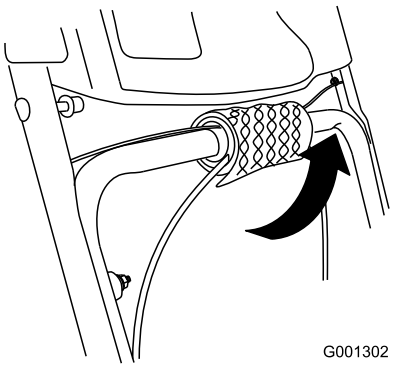

Figure 5

2. Route either the left or right cable end over the lower handle and insert the cable end into the hole in the corresponding wheel clutch lever (Figure 6).

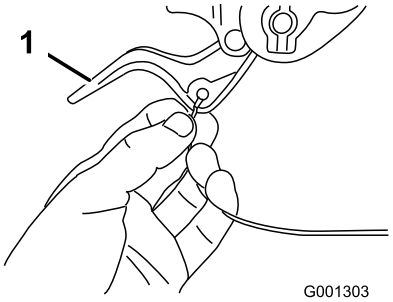

Figure 6

1. Wheel clutch lever

3. Remove the nut and washer from the handle, attach the cable clamp on the cable to the handle, install the washer and the nut, and hand tighten the nut (Figure 7).

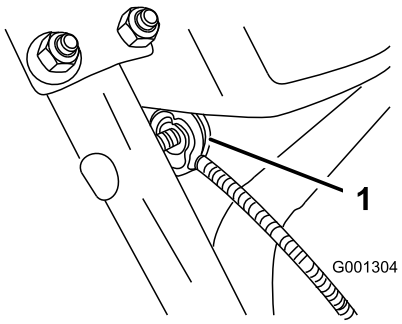

Figure 7

1. Cable clamp (2)

Important: Ensure that the curved side of the cable clamp is against the handle and that the cable is routed below the clamp bolt. The cable must be in a straight line from the cable clamp to the point where it attaches to the wheel clutch lever.

4. Pull the cable jacket down gently until the wheel clutch lever is down and the slack is out of the cable, then tighten the cable clamp nut securely (Figure 8).

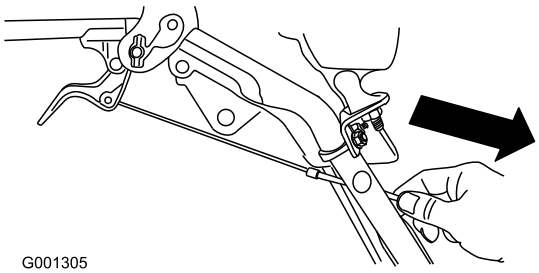

Figure 8

5. Squeeze the lever fully, then check the gap between the bottom of the handle and the wheel clutch lever end (Figure 9).

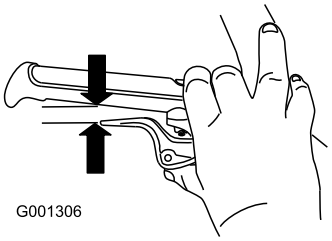

Figure 9

Note: The gap should be approximately the thickness of a pencil (6 mm or 1/4 inch). If it is greater, loosen the cable clamp nut, slide the cable jacket up slightly, tighten the cable clamp nut, and check the gap again.

6. Repeat steps 2 through 5 for the other cable.

3

Installing the Traction Control Linkage

No Parts Required

Procedure

1. Remove the hairpin cotter and washer from the lower end of the speed control rod and insert the lower end of the rod into the lower link arm so that the bent end of the speed control rod faces rearward (Figure 10).

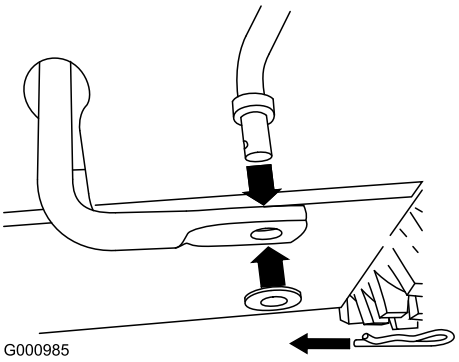

Figure 10

2. Secure the lower end of the speed control rod with the washer and hairpin cotter that you previously removed.
3. Remove the hairpin cotter and the outer washer from the trunnion on the upper end of the speed control rod (Figure 11).

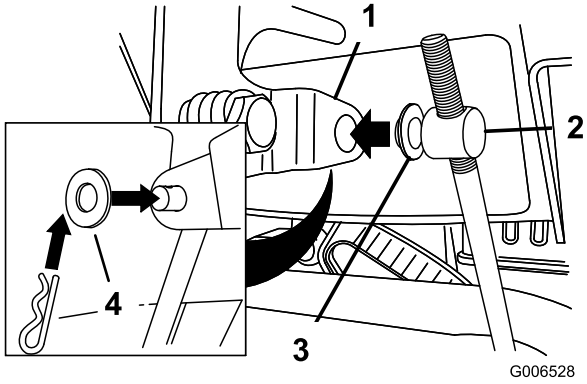

Figure 11

1. Speed selector lever
2. Trunnion
3. Inner washer
4. Outer washer

Note: To make installation easier, leave the flat washer on the trunnion (Figure 11).

4. Shift the speed selector lever into R2 position.
5. Rotate the lower link arm fully upward (counterclockwise) (Figure 12).

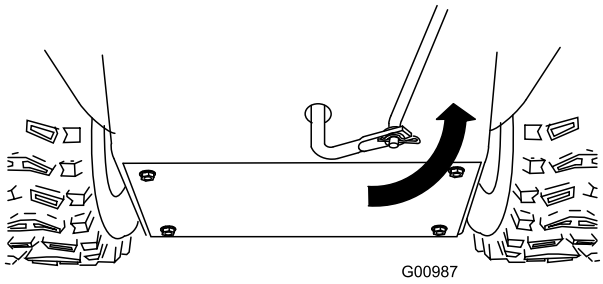

Figure 12

6. Lift up on the speed control rod and insert the trunnion into the hole in the speed selector lever (Figure 11).

   Note: If the trunnion does not fit into the hole when you lift up on the speed control rod, rotate the trunnion upward or downward on the speed control rod until it fits.

7. Secure the trunnion and upper end of the speed control rod with the outer washer and a hairpin cotter you previously removed.

Note: For easier installation, look down through the opening in the speed selector (Figure 13).

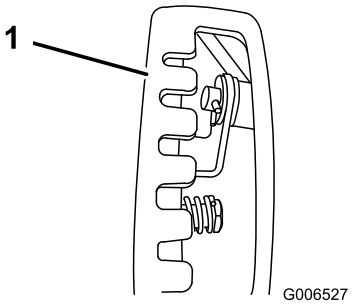

Figure 13

1. Speed selector

4

Installing the Chute Control Rod

Parts needed for this procedure:

2	Carriage bolts
2	Locknuts

Procedure

1. Unwrap the Quick Stick® and rotate it so that it is upright and in the center.
2. Hold the blue trigger cap down and pull the lever fully rearward.

   Note: The discharge chute and deflector should face forward. If they do not, hold the blue trigger cap down (but do not move the Quick Stick) and rotate the discharge chute until they do.

3. Align the flattened back end of the long chute control rod with the flattened front end of the short rod that extends from the control panel so that they nest together (Figure 14).

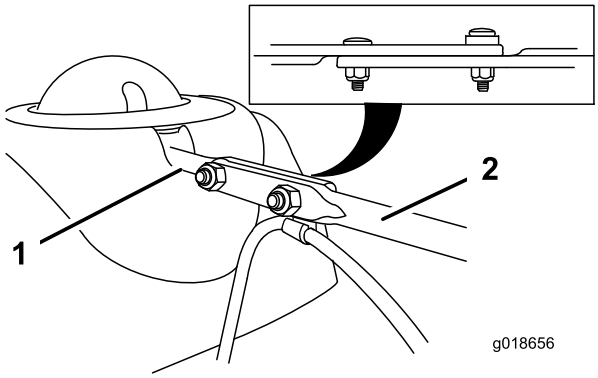

Figure 14

1. Short rod
2. Long chute control rod

4. Insert the front end of the rod into the opening in the back of the chute gear cover until it slides into the chute gear (Figure 15).

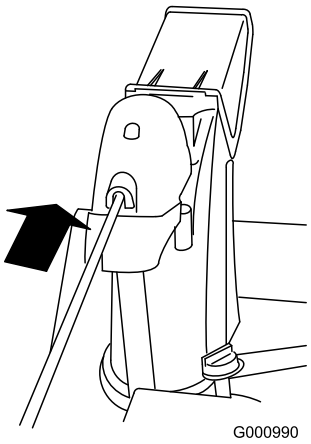

Figure 15

5. Align the holes in the nested ends of the rods and insert 2 carriage bolts (in the loose parts bag) through the short rod from the left side of the machine (from the operating position).
6. Insert the cable clip that supports the deflector cable under the head of the forward carriage bolt, and secure the carriage bolts with locknuts from the loose parts bag (Figure 16).

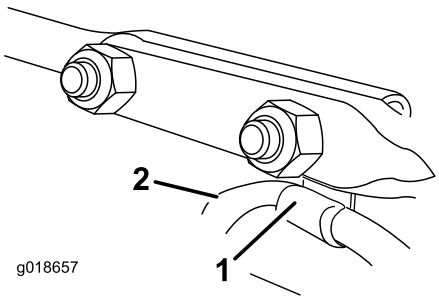

Figure 16

1. Cable clip
2. Deflector cable

7. Hold the blue trigger cap down and rotate the Quick Stick in a circle to ensure that the chute and deflector operate smoothly.

5

Connecting the Wire to the Headlight

Parts needed for this procedure:

1	Cable tie

Procedure

1. Insert the wire connector on the loose end of the wire straight into the back of the headlight until it is securely in place (Figure 17).

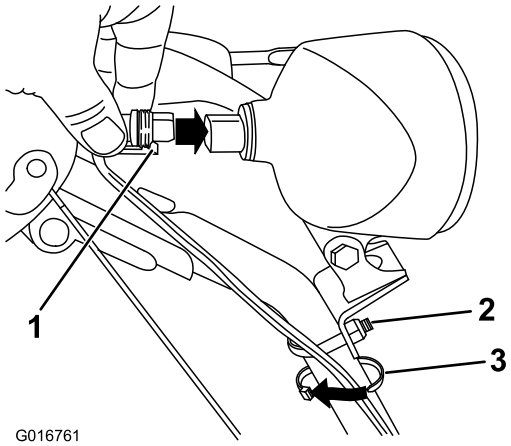

Figure 17

1. Plastic clip on wire connector
2. U-bolt
3. Cable tie

Note: Ensure that the plastic clip on the wire connector is on the bottom (Figure 17).

2. Secure a cable tie (from the loose parts bag) around the wire and the handle about 2.5 cm (1 inch) below the U-bolt (Figure 17).

6

Filling the Engine with Oil

No Parts Required

Procedure

Your machine comes with oil in the engine crankcase.

Note: Before starting the engine, check the oil level and add oil if necessary.

Use automotive detergent oil with an API service classification of SF, SG, SH, SJ, SL, or higher. Refer to your engine owner's manual.

Use Figure 18 below to select the best oil viscosity for the outdoor temperature range expected:

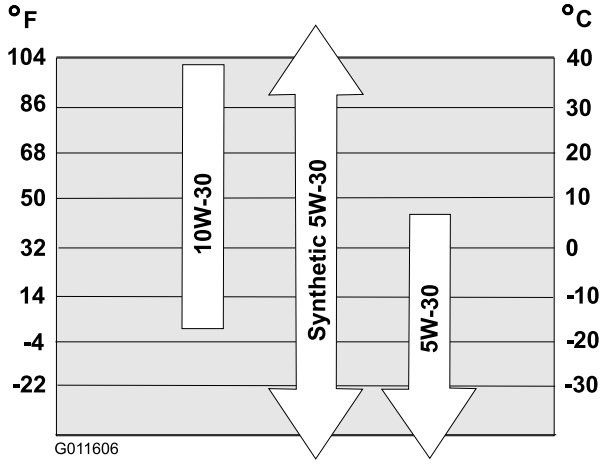

Figure 18

Engine Oil Capacities

Model	Engine Oil Capacity
38820	0.89 to 0.95 L (30 to 32 oz)
38824	

1. Remove the dipstick by rotating the cap counterclockwise and **slowly** pour oil into the oil fill tube to raise the oil level to the Full mark on the dipstick. **Do not overfill.** (Figure 19).

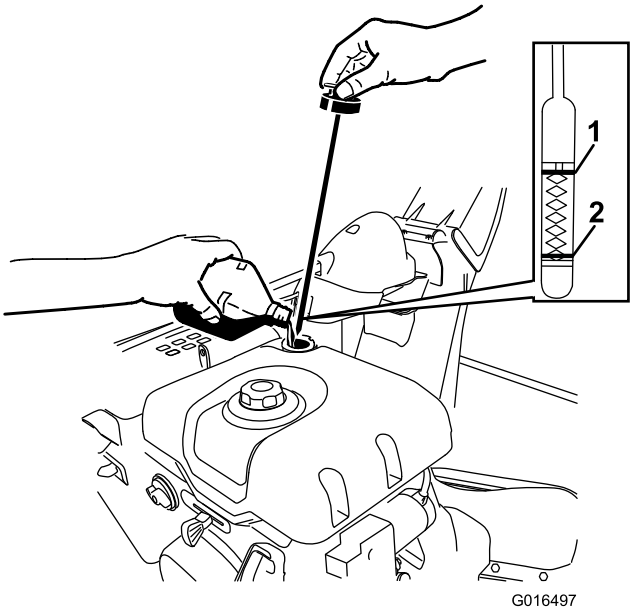

Figure 19

1. Full
2. Add oil

2. Install the dipstick securely by pushing the cap down flat and turning.

   Note: Do not spill oil around the oil fill tube; oil could leak onto traction parts and cause the traction to slip.

7

Checking the Tire Pressure

No Parts Required

Procedure

The tires are overinflated at the factory for shipping. Reduce the pressure equally in both tires to between 116 and 137 kPa (17 and 20 psi).

8

Checking the Skids and Scraper

No Parts Required

Procedure

Refer to Checking and Adjusting the Skids (page 21).

9

Checking the Traction Drive Operation

No Parts Required

Procedure

⚠ CAUTION

If the traction drive is not properly adjusted, the machine may move in the direction opposite of what you intended, causing injury and/or property damage.

Carefully check the traction drive and adjust it properly, if necessary.

1. Start the engine; refer to Starting the Engine.
2. Move the speed selector to Position R1; refer to Operating the Speed Selector.
3. Squeeze the left hand (traction) lever to the hand-grip (Figure 20).

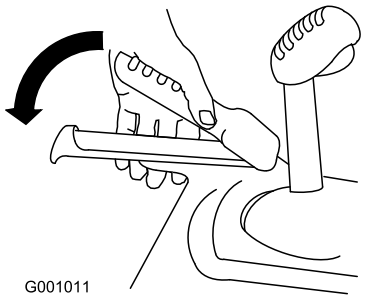

Figure 20

The machine should move rearward. If the machine does not move or moves forward, complete the following:

   A. Release the traction lever and stop the engine.
   B. Disconnect the trunnion from the speed selector lever (Figure 11).
   C. Turn the trunnion downward (clockwise) on the speed control rod (Figure 11).
   D. Connect the trunnion to the speed selector lever (Figure 11).

4. Release the traction lever.
5. Move the speed selector to the Position F1; refer to Operating the Speed Selector.
6. Squeeze the left hand (traction) lever to the hand-grip (Figure 20).

   The machine should move forward. If the machine does not move or moves rearward, complete the following:

   A. Release the traction lever and stop the engine.
   B. Disconnect the trunnion from the speed selector lever (Figure 11).
   C. Turn the trunnion upward (counterclockwise) on the speed control rod (Figure 11).
   D. Connect the trunnion to the speed selector lever (Figure 11).

7. If you made any adjustments, repeat this procedure until no adjustments are required.

Important: If the machine moves when the traction lever is in the released position, check the traction cable (refer to Checking and Adjusting the Traction Cable) or take the machine to an Authorized Service Dealer for service.

Product Overview

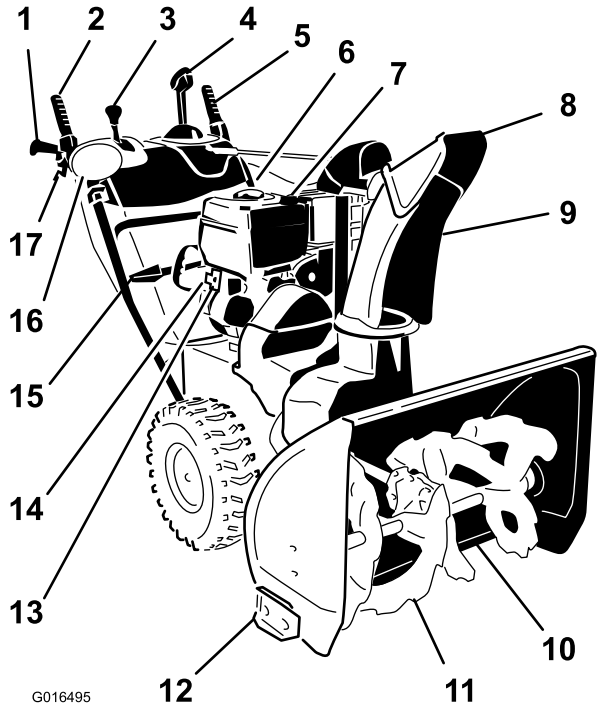

Figure 21

1. Hand-grip (2)
2. Auger/impeller lever
3. Speed selector lever
4. Quick Stick® discharge chute control
5. Traction lever
6. Fuel tank cap
7. Engine oil fill tube/dipstick
8. Chute deflector
9. Discharge chute
10. Scraper
11. Auger
12. Skid (2)
13. Electric starter button
14. Electric starter plug-in
15. Snow cleanout tool
16. Headlight
17. Wheel clutch lever (2)

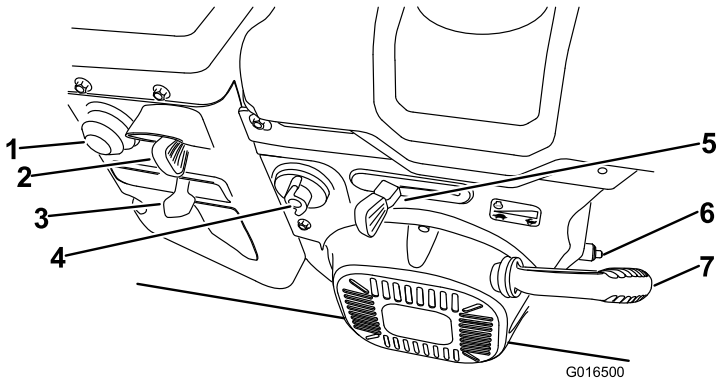

Figure 22

1. Primer
2. Ignition switch
3. Choke
4. Fuel shutoff valve
5. Throttle
6. Oil drain plug
7. Recoil starter

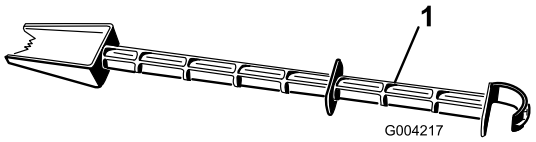

Figure 23

1. Snow cleanout tool (attached to the handle)

Operation

Before Operation

Safety

- Use extension cords and receptacles as specified by the manufacturer for all machines with electric starting motors.
- Do not operate the machine without wearing adequate winter garments. Avoid loose fitting clothing that can get caught in moving parts. Wear slip resistant footwear that will improve footing on slippery surfaces.
- Always wear safety glasses or eye shields during operation or while performing an adjustment or repair to protect eyes from foreign objects that may be thrown from the machine.
- Thoroughly inspect the area where the machine is to be used and remove all doormats, sleds, boards, wires, and other foreign objects.
- If a shield, safety device, or decal is damaged, illegible, or lost, repair or replace it before beginning operation. Also, tighten any loose fasteners.

Filling the Fuel Tank

⚠ DANGER

Gasoline is extremely flammable and explosive. A fire or explosion from gasoline can burn you and others.

- **To prevent a static charge from igniting the gasoline, place the container and/or machine on the ground before filling, not in a vehicle or on an object.**
- **Fill the tank outdoors when the engine is cold. Wipe up spills.**
- **Do not handle gasoline when smoking or around an open flame or sparks.**
- **Store gasoline in an approved fuel container, out of the reach of children.**

- For best results, use only clean, fresh, unleaded gasoline with an octane rating of 87 or higher ((R+M)/2 rating method).
- Oxygenated fuel with up to 10% ethanol or 15% MTBE by volume is acceptable.
- **Do not** use ethanol blends of gasoline (such as E15 or E85) with more than 10% ethanol by volume. Performance problems and/or engine damage may result which may not be covered under warranty.
- **Do not** use gasoline containing methanol.
- **Do not** store fuel either in the fuel tank or fuel containers over the winter unless a fuel stabilizer is used.
- **Do not** add oil to gasoline.

Important: To reduce starting problems, add fuel stabilizer to the fuel all season, mixing it with gasoline less than 30 days old. *Do not add oil to the gasoline.*

Note: Do not fill above the bottom of the tank neck.

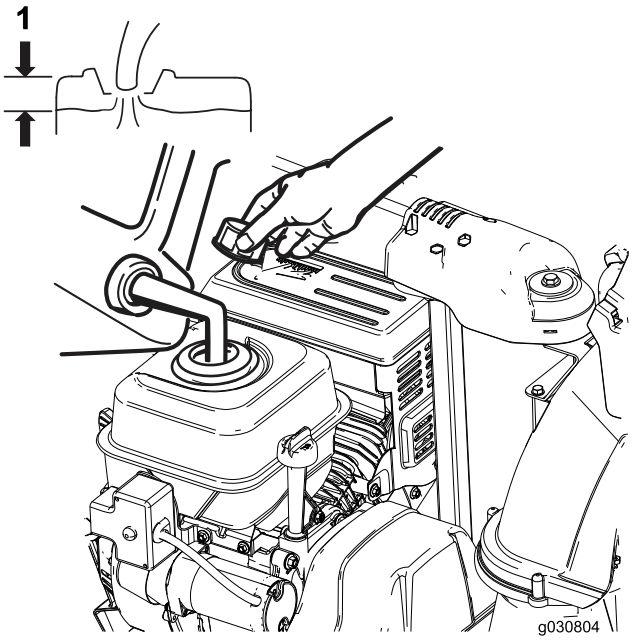

Figure 24

1. Do not fill above the bottom of the tank neck

During Operation

Safety

- **Rotating auger blades can injure fingers or hands.** Stay behind the handles and away from the discharge opening while operating the machine. **Keep your face, hands, feet, and any other part of your body or clothing away from moving or rotating parts.**
- Never direct the discharge toward people or areas where property damage can occur.
- Exercise caution to avoid slipping or falling. Always be sure of your footing, and keep a firm hold on the handles. Walk; never run.
- Exercise extreme caution when operating on slopes.
- Never operate the machine without good visibility or light.
- Look behind and use care when backing up with the machine.
- When not actively clearing snow, disengage power to the rotor blades.
- Use extension cords and receptacles as specified by the manufacturer for all machines with electric starting motors.
- Do not attempt to clear snow from a gravel or crushed rock surface. This product is intended for use only on paved surfaces.
- Do not use the machine on a roof.
- Never attempt to make any adjustments while the engine is running (except when specifically recommended by manufacturer).
- Stay alert for hidden hazards or traffic.
- After striking a foreign object, stop the engine, remove the ignition key, thoroughly inspect the machine for any damage, and repair the damage before restarting and operating the machine.
- If the machine should start to vibrate abnormally, stop the engine and check immediately for the cause.
- Do not run the engine indoors, except when starting the engine and for transporting the machine in or out of the building. Open the outside doors; exhaust fumes are dangerous.
- Do not overload the machine capacity by attempting to clear snow at too fast a rate.
- Never touch a hot engine or muffler.
- Thoroughly inspect the electrical cord before plugging it into a power source. If the cord is damaged, do not use it to start the machine. Replace the damaged cord immediately. Unplug the power cord whenever you are not starting the machine.

Starting the Engine

1. Check the engine oil level. Refer to Checking the Engine Oil Level in Maintenance.
2. Turn the fuel shutoff valve 1/4 turn counterclockwise to open it (Figure 25).

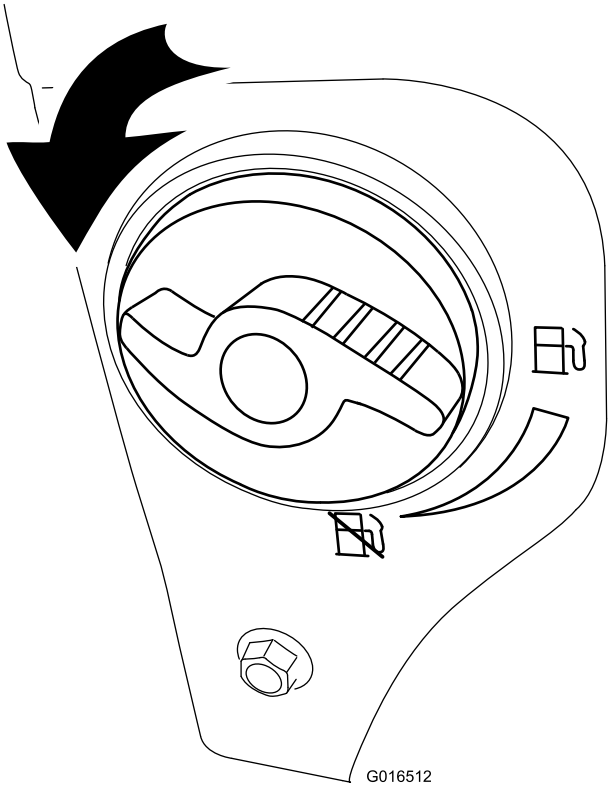

Figure 25

3. Insert the ignition key all the way in (Figure 26).

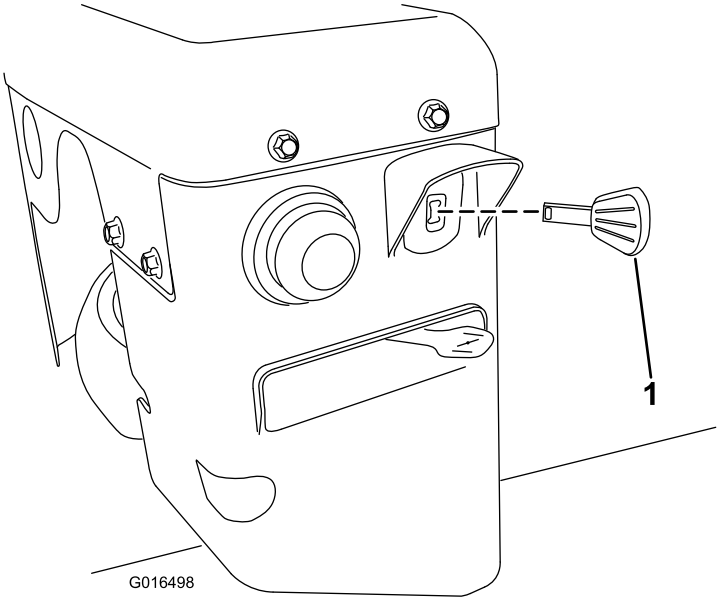

Figure 26

1. Ignition key

4. Firmly push in the primer 3 times with your thumb, holding the primer in for a second before releasing it each time (Figure 27).

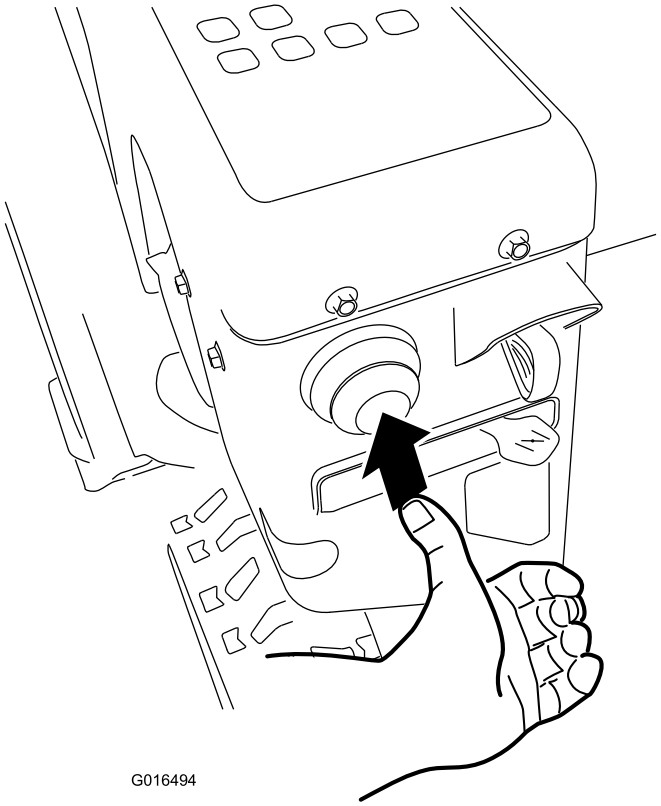

Figure 27

5. Move the choke to the Choke position (Figure 28).

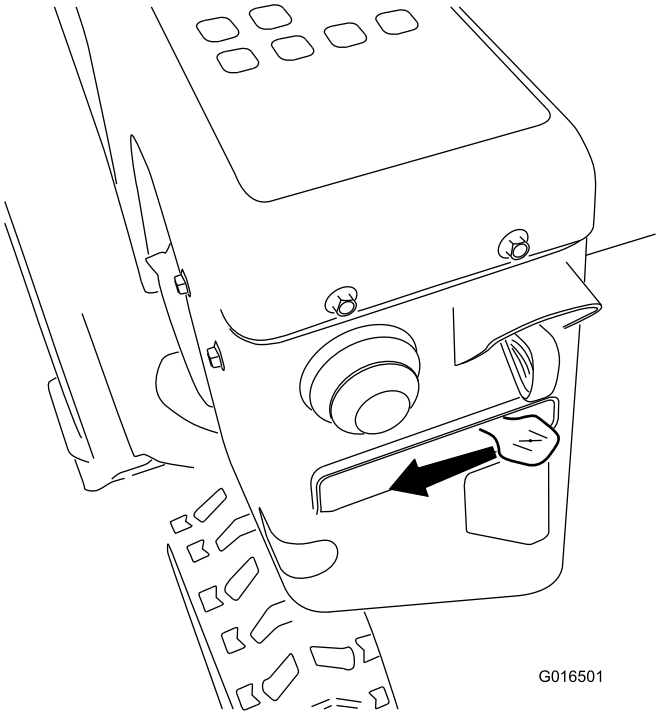

Figure 28

6. Move the throttle to the Fast position (Figure 29).

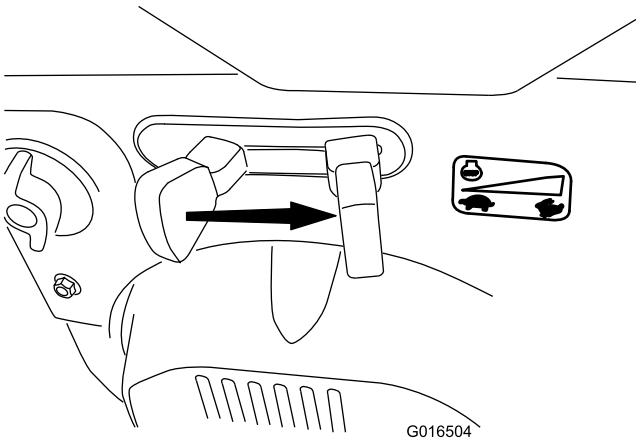

Figure 29

7. Start the machine by pulling the recoil starter or pressing the electric-starter button (Figure 30).

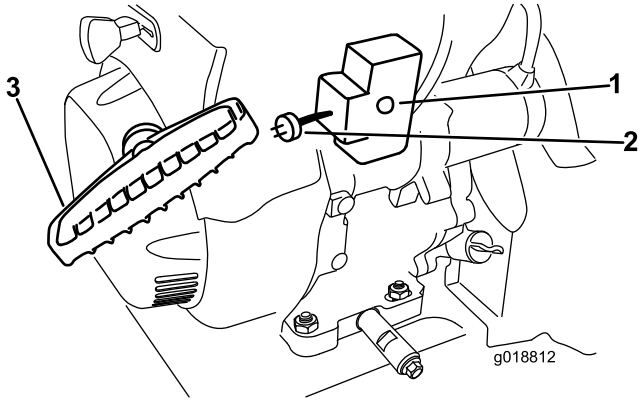

Figure 30

1. Electric-starter button
2. Electric starter plug-in
3. Recoil starter

Note: To use the electric starter, connect a power cord to the electric starter plug-in first and then to a power outlet. Use only a UL-listed, 16-gauge extension cord recommended for outdoor use that is not longer than 50 feet (15 m).

⚠ WARNING

The electrical cord can become damaged, causing a shock or fire.

Thoroughly inspect the electrical cord before using the machine. If the cord is damaged, do not operate the machine. Replace or repair the damaged cord immediately. Contact an Authorized Service Dealer for assistance.

Important: To prevent damaging the electric starter, run it in short cycles (5 seconds on, 5 seconds off), no more than 10 times. If the engine still does not start, take the machine to an Authorized Service Dealer for service.

8. Disconnect the power cord from the power outlet first and then from the machine (electric start only).
9. Allow the engine to warm up; gradually move the choke toward the Run position. Wait for the engine to run smoothly before each choke adjustment.

⚠ CAUTION

If you leave the machine plugged into a power outlet, someone can inadvertently start the machine and injure people or damage property.

Unplug the power cord whenever you are not starting the machine.

Stopping the Engine

1. Move the throttle to the Slow position, and then to the Stop position (Figure 31) to kill the engine. The engine can also be stopped by pulling the ignition key outward to the middle position.

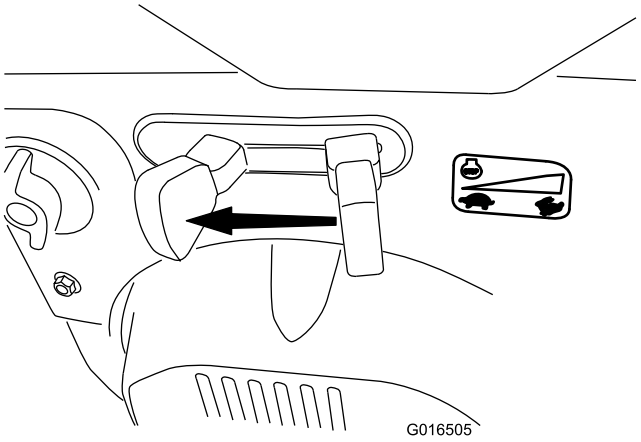

Figure 31

2. Wait for all moving parts to stop before leaving the operating position.
3. Remove the ignition key to prevent accidental starting.
4. Close the fuel shutoff valve by rotating it clockwise (Figure 32).

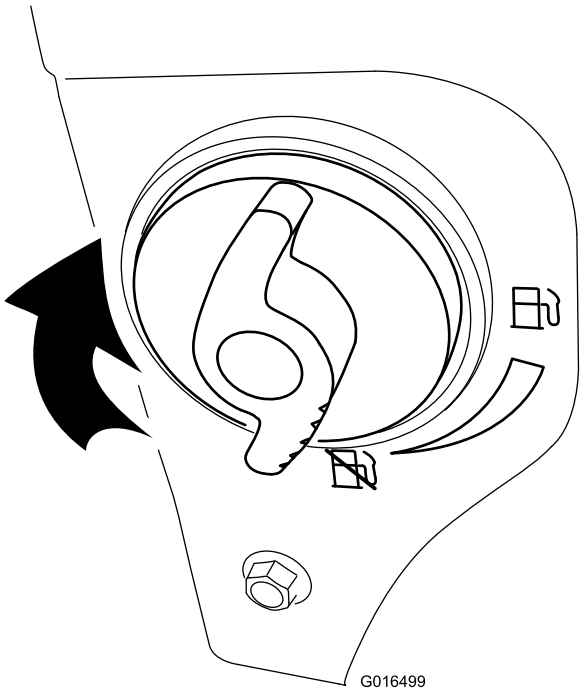

Figure 32

5. Pull the recoil starter 3 or 4 times. This helps prevent the recoil starter from freezing up.

Operating the Traction Drive

⚠ CAUTION

If the traction drive is not properly adjusted, the machine may move in the direction opposite of what you intended, causing injury and/or property damage.

Carefully check the traction drive and adjust it properly, if necessary; refer to Checking the Traction Drive Operation in Setup for more information.

Important: If the machine moves when the traction lever is in the released position, check the traction cable (refer to Checking and Adjusting the Traction Cable) or take the machine to an Authorized Service Dealer for service.

Important: To operate the traction drive, you must operate the machine with the self-propel feature engaged. Refer to Freewheeling or Using the Self-propel Drive.

1. To engage the traction drive, squeeze the left hand (traction) lever to the handgrip (Figure 33).

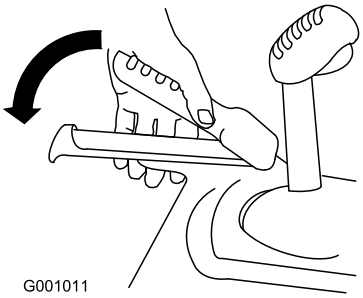

Figure 33

2. To stop the traction drive, release the traction lever.

Using the Wheel Clutch Levers

The wheel clutch levers allow you to momentarily disengage the drive to one or both wheels with the traction drive lever still engaged. This enables you to turn and maneuver the machine easily.

Note: Holding down the traction lever against the handle engages the traction drive to both wheels.

To turn the machine to the right, lift up on the right wheel clutch lever and squeeze it toward the handle (Figure 34).

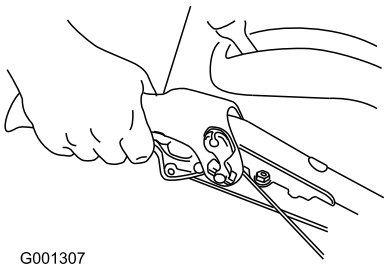

Figure 34

Note: This disengages the drive to the right wheel while the left wheel continues driving, and the machine turns to the right.

Note: Similarly, squeezing the left wheel clutch lever turns the machine to the left.

When you complete the turn, release the wheel clutch lever, and the drive re-engages both wheels (Figure 35).

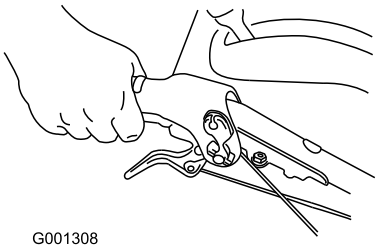

Figure 35

Momentarily squeezing and releasing the left or right wheel clutch lever also allows for steering adjustments to keep the machine going in a straight line, especially in deep snow.

Squeezing both wheel clutch levers simultaneously disengages the drive to both wheels. This enables you to manually move the machine backward without stopping to shift it into a reverse gear. It also allows you to maneuver and transport the machine more easily when the engine is not running.

Operating the Speed Selector

The speed selector has 6 forward and 2 reverse gears. To change speeds, release the traction lever and shift the speed selector lever to the desired position (Figure 36). The lever locks in a notch at each speed selection.

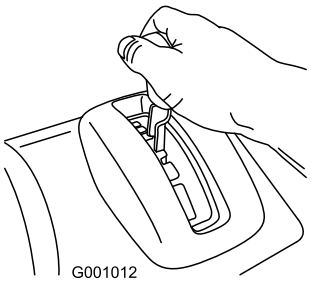

Figure 36

Operating the Auger/Impeller Drive

1. To engage the auger/ impeller drive, squeeze the right hand (auger/ impeller) lever to the handgrip (Figure 37).

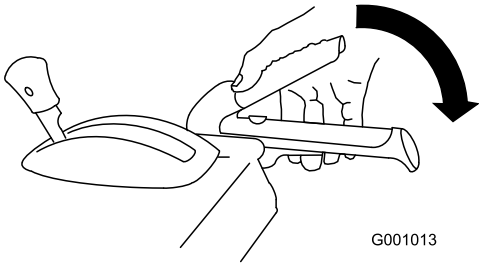

Figure 37

2. To stop the auger and impeller, release the right hand lever.

   Important: When you engage both the auger/impeller lever and the traction lever, the traction lever locks the auger/impeller lever down, freeing your right hand. To release both levers, simply release the left hand (traction) lever.

3. If the auger and impeller continue to rotate when you release the auger/impeller lever, do not operate the machine. Check the auger/impeller cable (refer to Checking and Adjusting the Auger/Impeller Cable) and adjust it if necessary. Otherwise, take the machine to an Authorized Dealer for service.

⚠ WARNING

If the auger and impeller continue to rotate when you release the auger/impeller lever, you could seriously injure yourself or others.

Do not operate the machine. Take it to an Authorized Service Dealer for service.

Operating the Quick Stick®

Hold the blue trigger cap down to use the Quick Stick to move the discharge chute and the chute deflector. Release the trigger cap to lock the discharge chute and chute deflector into position (Figure 38).

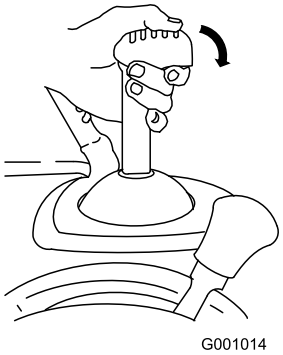

Figure 38

Moving the Discharge Chute

Hold the blue trigger cap down and move the Quick Stick to the left to move the discharge chute to the left; move the Quick Stick to the right to move the discharge chute to the right (Figure 39).

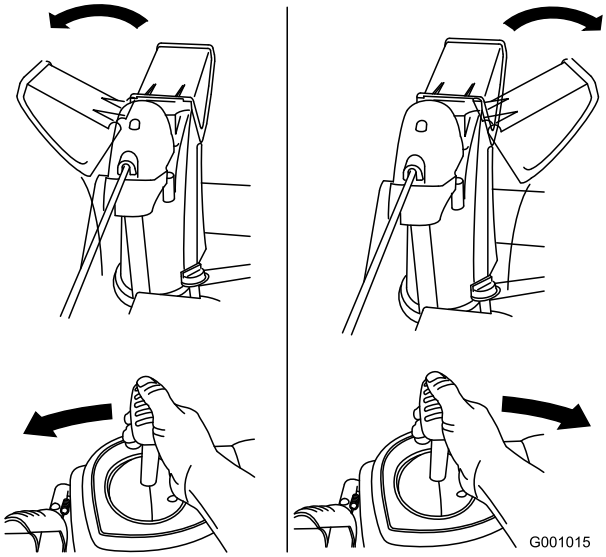

Figure 39

- If the chute does not move, refer to Adjusting the Discharge Chute Latch.
- If the chute does not turn as far to the left as it does to the right, ensure that the cable is routed to the inside of the handles. Refer to Installing the Upper Handle.
- If the chute does not lock into place when you release the trigger cap, refer to Adjusting the Discharge Chute Latch.

Moving the Chute Deflector

Hold the blue trigger cap down and move the Quick Stick forward to lower the chute deflector; move it rearward to raise the chute deflector (Figure 40).

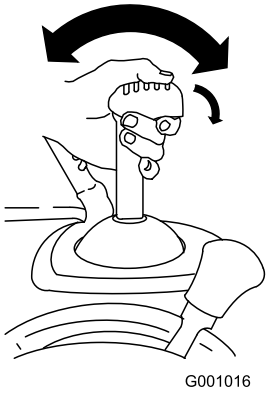

Figure 40

Unclogging the Discharge Chute

⚠ WARNING

If the auger/impeller is running but there is no snow coming out of the discharge chute, the discharge chute may be clogged.

Never use your hands to clear a clogged discharge chute. This could result in personal injury.

- To unclog the discharge chute, stay in the operating position and release the left hand (traction) lever. While running the auger/impeller, push down on the handles to raise the front of the machine a few inches (centimeters) off the pavement. Then lift the handles quickly to bump the front of the machine on the pavement. Repeat if necessary until a stream of snow comes out the discharge chute.
- If you cannot unclog the discharge chute by bumping the front of the machine, **stop the engine, wait for all moving parts to stop, and use the snow cleanout tool; never use your hand.**

Important: Unclogging the discharge chute by bumping the front of the machine on the pavement may cause the skids to move. Adjust the skids and tighten the skid bolts securely.

Operating Tips

⚠ DANGER

When the machine is in operation, the impeller and auger can rotate and cut off or injure hands and feet.

- **Before adjusting, cleaning, inspecting, troubleshooting, or repairing the machine, stop the engine and wait for all moving parts to stop. Disconnect the wire from the spark plug and keep it away from the plug to prevent someone from accidentally starting the engine.**
- **Remove an obstruction from the discharge chute; refer to Unclogging the Discharge Chute. If necessary, use the snow cleanout tool, not your hands, to remove an obstruction from the discharge chute.**
- **Stay behind the handles and away from the discharge opening while operating the machine.**
- **Keep face, hands, feet, and any other part of your body or clothing away from concealed, moving, or rotating parts.**

⚠ WARNING

The impeller can throw stones, toys, and other foreign objects and cause serious personal injury to the operator or to bystanders.

- **Keep the area to be cleared free of all objects that the augers could pick up and throw.**
- **Keep all children and pets away from the area of operation.**

- Always set the throttle to the Fast position when throwing snow.
- If the engine slows down under a load or the wheels slip, shift the machine into a lower gear.
- If the front of the machine rides up, shift the machine into a lower gear. If the front continues to ride up, lift up on the handles.

After Operation

Safety

- Never store the machine with fuel in the fuel tank inside a building where ignition sources are present, such as hot water heaters, space heaters, or clothes dryers. Allow the engine to cool before storing in any enclosure.
- When storing the machine for more than 30 days, refer to the Storage section for important details.

Preventing Freeze-up

- In snowy and cold conditions, some controls and moving parts may freeze. **Do not use excessive force when trying to operate frozen controls.** If you have difficulty operating any control or part, start the engine and let it run for a few minutes.
- After using the machine, let the engine run for a few minutes to prevent moving parts from freezing. Engage the auger/impeller to clear any remaining snow from inside the housing. Rotate the Quick Stick to prevent it from freezing. Stop the engine, wait for all moving parts to stop, and remove all ice and snow from the machine.
- With the engine off, pull the recoil starter handle several times and push the electric-starter button once to prevent the recoil starter and electric starter from freezing up.

Maintenance

Note: Determine the left and right sides of the machine from the normal operating position.

Recommended Maintenance Schedule(s)

Maintenance Service Interval	Maintenance Procedure
After the first 2 hours	• Inspect the traction cable and adjust it if necessary.
After the first 5 hours	• Change the engine oil.
Before each use or daily	• Check the engine oil level and add oil if necessary.
Every 50 hours	• Change the engine oil. Change the engine oil every 25 operating hours when operating the engine under a heavy load.
Every 100 hours	• Replace the spark plug.
Yearly	• Check the skids and adjust them if necessary. • Inspect the traction cable and adjust or replace it if necessary. • Check the auger gearbox oil and add oil if necessary.
Yearly or before storage	• Check the air pressure in the tires and inflate them to 17–20 psi (116–137 kPa). • Run the engine to dry out the fuel tank and the carburetor at the end of the season. • Have an Authorized Service Dealer inspect and replace the traction drive belt and/or the auger/impeller drive belt, if necessary.

Important: You can find more information about maintaining and servicing your machine at www.Toro.com.

Maintenance Safety

Read the following safety precautions before performing any maintenance on the machine:

- Before performing any maintenance, service, or adjustment, stop the engine and remove the key. If major repairs are ever needed, contact an Authorized Service Dealer.
- Check all fasteners at frequent intervals for proper tightness to be sure the machine is in safe working condition.
- Maintain or replace safety and instruction labels, as necessary.
- Do not change the governor settings on the engine.
- Purchase only genuine Toro replacement parts and accessories.

Preparing for Maintenance

1. Move the machine to a level surface.
2. Stop the engine and wait for all moving parts to stop.
3. Disconnect the spark plug wire. Refer to Replacing the Spark Plug.

Checking the Engine Oil Level

Service Interval: Before each use or daily—Check the engine oil level and add oil if necessary.

1. Remove the dipstick, wipe it clean, then fully install the dipstick.
2. Remove the dipstick and check the oil level (Figure 41). If the oil level is below the Add mark on the dipstick, add oil. Refer to (page).

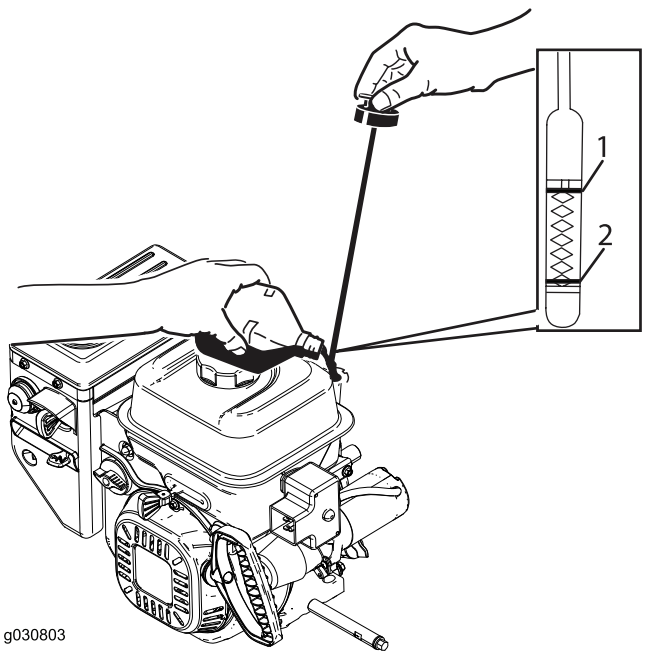

Figure 41

1. Full
2. Add oil

Checking and Adjusting the Skids

Service Interval: Yearly—Check the skids and adjust them if necessary.

Check the skids to ensure that the auger does not contact the paved or gravel surface. Adjust the skids as needed to compensate for wear.

1. Check the tire pressure. Refer to Checking the Tire Pressure.
2. Loosen the nuts that secure both skids to the auger sides until the skids slide up and down easily (Figure 42).

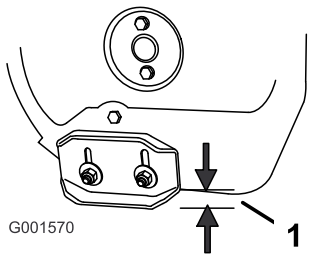

Figure 42

1. 1/2 inch (1.3 cm)

3. Support the side plates so that they are **at least** 1/2 inch (1.3 cm) above a level surface.

   Important: The auger blades must be supported above the ground by the skids.

4. Ensure that the scraper is 3 mm (1/8 inch) above and parallel to a level surface.

   Note: If the pavement is cracked, rough, or uneven, adjust the skids to raise the scraper. For gravel surfaces, adjust the skids further down to prevent the machine from picking up rocks.

5. Move the skids down until they are even with the ground.
6. Firmly tighten the nuts that secure both skids to the auger sides.

   Note: To quickly adjust the skids if they loosen, support the scraper 3 mm (1/8 inch) off the pavement, then adjust the skids down to the pavement.

   Note: If the skids become excessively worn, you can turn them over and set the unused side toward the pavement.

Checking and Adjusting the Traction Cable

Service Interval: After the first 2 hours—Inspect the traction cable and adjust it if necessary.

Yearly—Inspect the traction cable and adjust or replace it if necessary.

If the machine does not drive in the forward or reverse speeds or it drives when you release the traction lever, adjust the traction cable.

With the traction lever disengaged, check the pin in the elongated slot in the left side of the machine above the tire. There should be a gap of 1 to 1.5 mm (1/32 to 1/16 inch) from the front of the slot to the front edge of the pin (Figure 43).

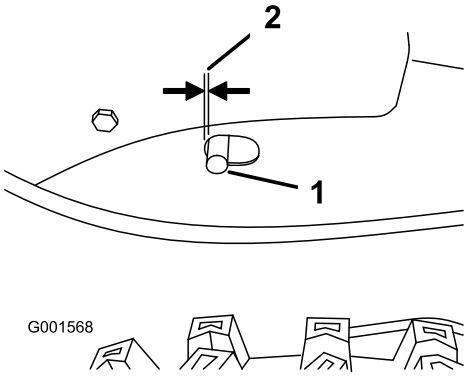

Figure 43

1. Pin
2. 1 to 1.5 mm (1/32 to 1/16 inch)

If the left hand (traction) cable is not properly adjusted, do the following steps:

1. Loosen the jam nut.
2. Loosen or tighten the turnbuckle to adjust the pin until it is the proper gap from the front edge of the slot.
3. Tighten the jam nut (Figure 44).

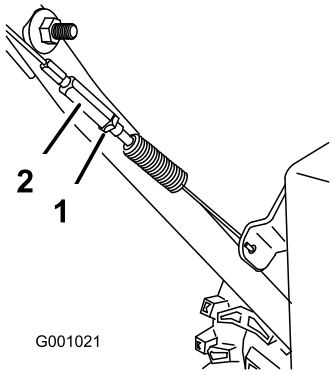

Figure 44

1. Jam nut
2. Turnbuckle

Checking the Auger Gearbox Oil Level

Service Interval: Yearly—Check the auger gearbox oil and add oil if necessary.

1. Move the machine to a level surface.
2. Clean the area around the pipe plug (Figure 45).

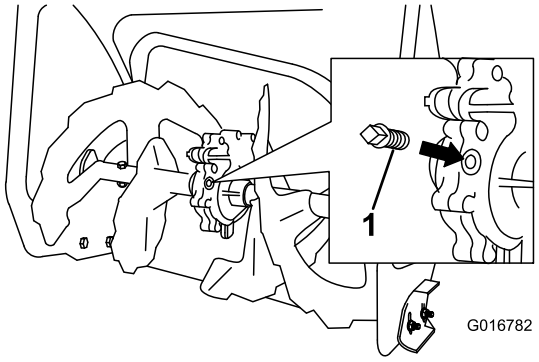

Figure 45

1. Pipe plug

3. Remove the pipe plug from the gearbox.
4. Check the oil level in the gearbox. The oil should be at the point of overflowing at the filler opening.
5. If the oil level is low, add GL-5 or GL-6, SAE 85-95 EP gear oil lubricant to the gearbox until the point of overflow.

   Note: Do not use synthetic oil.
6. Install the pipe plug in the gearbox.

Changing the Engine Oil

Service Interval: After the first 5 hours—Change the engine oil.

Every 50 hours—Change the engine oil. Change the engine oil every 25 operating hours when operating the engine under a heavy load.

If possible, run the engine just before changing the oil because warm oil flows better and carries more contaminants.

Use automotive detergent oil with an API service classification of SF, SG, SH, SJ, SL, or higher. Refer to your engine owner's manual.

Use Figure 46 below to select the best oil viscosity for the outdoor temperature range expected:

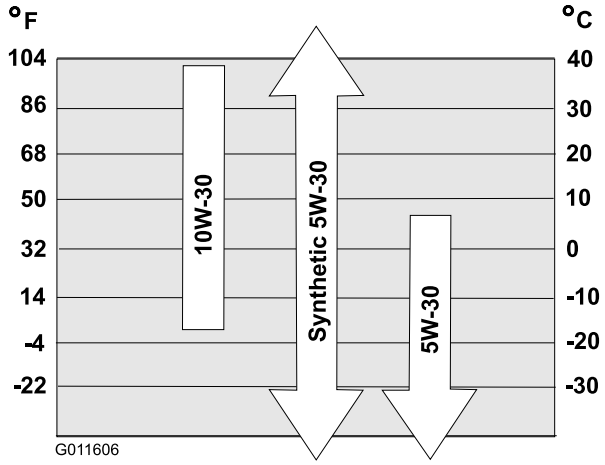

Figure 46

Engine Oil Capacities

Model	Engine Oil Capacity
38820	0.89 to 0.95 L (30 to 32 oz)
38824	0.89 to 0.95 L (30 to 32 oz)

1. Clean the area around the oil drain cap (Figure 47).

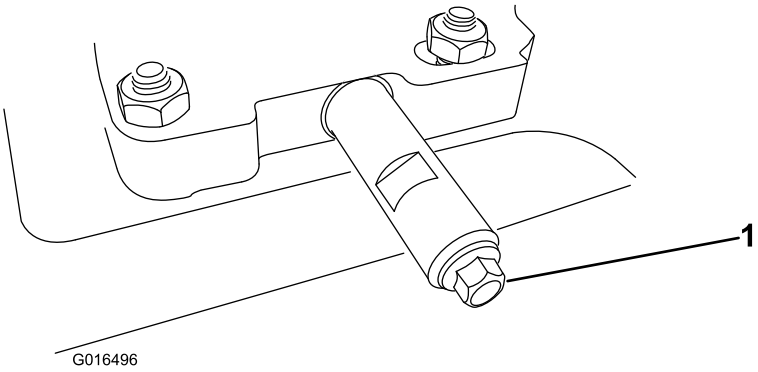

Figure 47

1. Oil drain plug

2. Slide an oil drain pan under the drain extension and remove the oil drain plug.

   Note: When removing the plug, ensure the tube does not loosen.

3. Drain the oil.

   Note: Dispose of the used oil properly at a local recycling center.

4. Install the oil drain plug.
5. Fill the crankcase with oil. Refer to 6 Filling the Engine with Oil (page 9).

Replacing the Spark Plug

Service Interval: Every 100 hours—Replace the spark plug.

⚠ WARNING

Replacing the spark plug while the engine is hot can result in burns.

Wait until the engine is cool to replace the spark plug.

Use a Toro spark plug or equivalent (Champion® RN9YC or NGK BPR6ES).

1. Remove the boot (Figure 48).

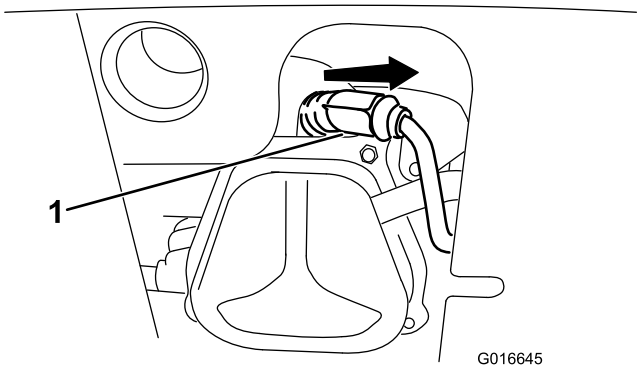

Figure 48

1. Spark plug boot

2. Clean around the base of the spark plug.

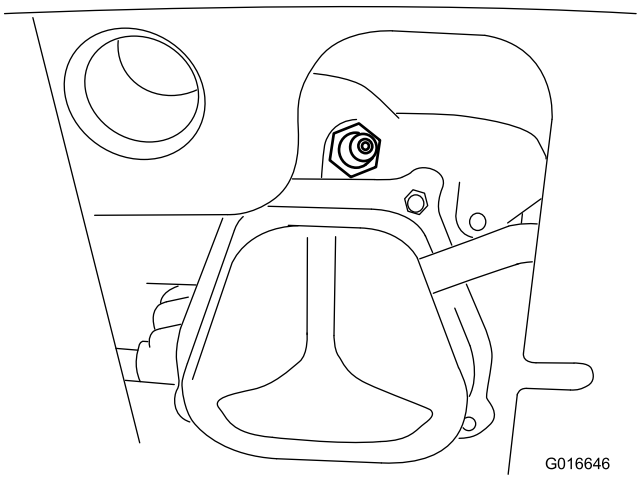

Figure 49

3. Remove and discard the old spark plug.

   Note: You will need a ratchet wrench extension to remove the spark plug.

4. Set the gap between the electrodes on a new spark plug at 0.76 mm (0.030 inch) (Figure 50).

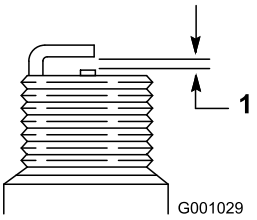

Figure 50

1. 0.030 inch (0.76 mm)

5. Install the new spark plug, tighten it firmly, and attach the ignition wire to the spark plug.

   Note: Ensure the ignition wire snaps completely into place on the spark plug.

Adjusting the Discharge Chute Latch

If the discharge chute does not lock into the desired position or does not unlock so that you can move it to another position, adjust the discharge chute latch.

1. Remove the fastener on the gear cover (Figure 51), lift the front of the cover up, and slide it back and out of the way.

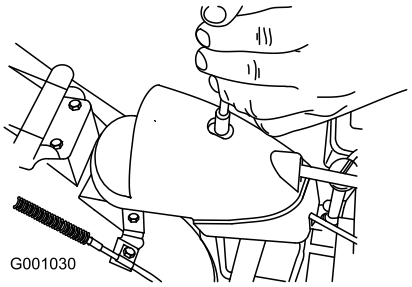

Figure 51

2. Loosen the bolt on the cable clamp (Figure 52).

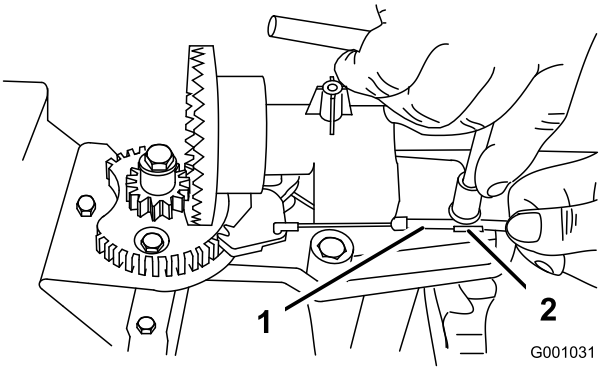

Figure 52

1. Cable conduit 2. Cable clamp

3. Grasp the cable conduit and move it toward the front of the machine until the discharge chute latch fully engages the gear teeth (Figure 52 and Figure 53).

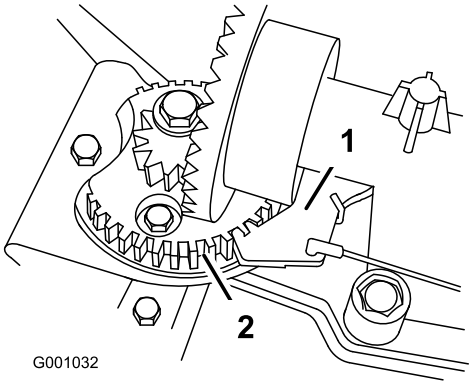

Figure 53

1. Discharge chute latch 2. Gear teeth

Note: The latch is spring loaded and will naturally move into the teeth of the gear (Figure 53).

4. Remove any slack in the cable by pulling the cable conduit rearward.
5. Tighten the bolt on the cable clamp, being careful not to strip the plastic part.
6. Install and secure the gear cover.

Replacing the Drive Belts

If the auger/impeller drive belt or the traction drive belt becomes worn, oil-soaked, or otherwise damaged, have an Authorized Service Dealer replace the belt.

Replacing the Headlight Bulb

Use a GE 899 37W halogen light bulb. Do not touch the bulb with your hands or allow dirt or moisture to come into contact with the bulb.

1. Remove the wire connector from the back of the headlight (Figure 54).

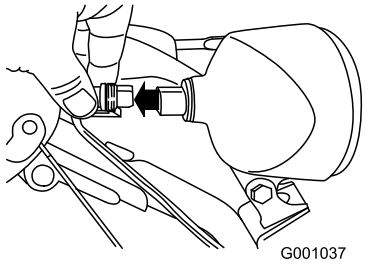

Figure 54

2. Turn the base of the bulb counterclockwise until it stops (Figure 55).

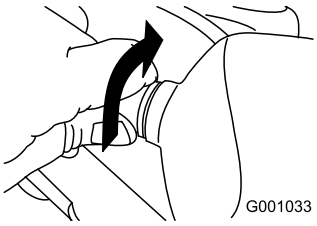

Figure 55

3. Remove the bulb straight out from the back of the headlight (Figure 56).

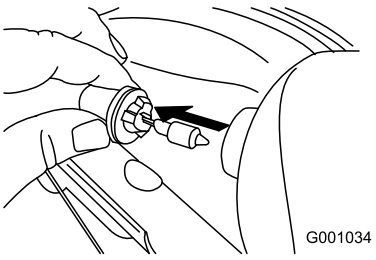

Figure 56

4. Insert a new bulb into the back of the headlight (Figure 57).

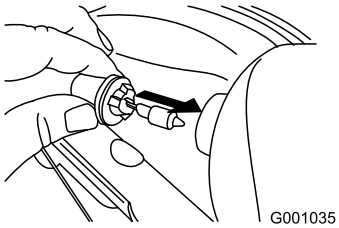

Figure 57

5. Turn the base of the bulb clockwise until it is snug (Figure 58).

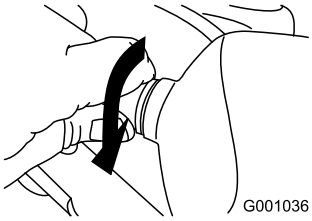

Figure 58

6. Insert the wire connector straight into the back of the headlight until it is securely in place (Figure 59).

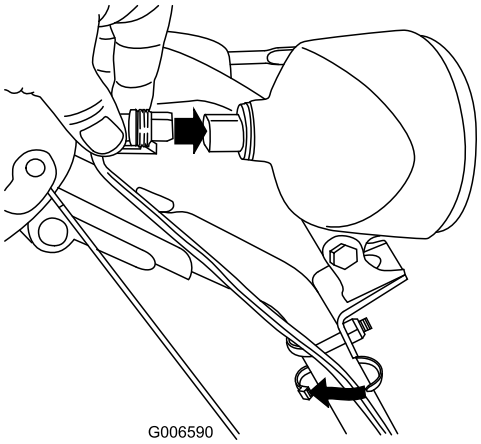

Figure 59

Storage

⚠ WARNING

- **Gasoline vapors can explode.**
- **Do not store gasoline more than 30 days.**
- **Do not store the machine in an enclosure near an open flame.**
- **Allow the engine to cool before storing it.**

Preparing the Machine for Storage

1. On the last refueling of the year, add fuel stabilizer to fresh fuel.

   Note: Fuel should not be stored longer than suggested by the fuel stabilizer manufacturer.

2. Run the engine for 10 minutes to distribute the conditioned fuel through the fuel system.
3. Run the machine until the engine runs out of fuel.
4. Prime the engine and start it again.
5. Allow the engine to run until it stops. When you can no longer start the engine, it is sufficiently dry.
6. Stop the engine and allow it to cool.
7. Remove the ignition key.
8. Clean the machine thoroughly.
9. Touch up chipped surfaces with paint available from an Authorized Service Dealer. Sand affected areas before painting, and use a rust preventative to prevent the metal parts from rusting.
10. Tighten all loose screws, bolts, and locknuts. Repair or replace any damaged parts.
11. Cover the machine and store it in a clean, dry place out of the reach of children.

Removing the Machine from Storage

Perform the annual maintenance procedures as given in the Recommended Maintenance Schedule.

Troubleshooting

Problem	Possible Cause	Corrective Action
The electric starter does not turn (electric-start models only).	1. The power cord is disconnected at the outlet or the machine. 2. The power cord is worn, corroded, or damaged. 3. The power outlet is not energized.	1. Connect the power cord to the outlet and/or the machine. 2. Replace the power cord. 3. Have a qualified electrician energize the outlet.
The engine does not start or starts hard.	1. The key is not in the ignition or is in the Stop position. 2. The choke is in the Off position and the primer has not been pressed. 3. The fuel shutoff valve is not open. 4. The throttle is not in the Fast position. 5. The fuel tank is empty or the fuel system contains stale fuel. 6. The spark plug wire is loose or disconnected. 7. The spark plug is pitted, fouled, or the gap is incorrect. 8. The fuel vent cap is restricted. 9. The engine oil level in the engine crankcase is too low or too high.	1. Insert the key into the ignition and turn it to the On position. 2. Move the choke to the On position and press the primer 3 times. 3. Open the fuel shutoff valve. 4. Move the throttle to the Fast position. 5. Drain and/or fill the fuel tank with fresh gasoline (not more than 30 days old). If the problem persists, contact an Authorized Service Dealer. 6. Connect the wire to the spark plug. 7. Check the spark plug and adjust the gap if necessary. Replace the spark plug if it is pitted, fouled, or cracked. 8. Remove the vent restriction or replace the fuel cap. 9. Add or drain oil to adjust the oil level in the engine crankcase to the Full mark on the dipstick.
The engine runs rough.	1. The choke is in the On position. 2. The fuel shutoff valve is not completely open. 3. The fuel tank is nearly empty or contains stale fuel. 4. The spark plug wire is loose. 5. The spark plug is pitted, fouled, or the gap is incorrect. 6. The engine oil level in the engine crankcase is too low or too high.	1. Move the choke to the Off position. 2. Open the fuel shutoff valve. 3. Drain and fill the fuel tank with fresh gasoline (not more than 30 days old). If the problem persists, contact an Authorized Service Dealer. 4. Connect the wire to the spark plug. 5. Check the spark plug and adjust the gap if necessary. Replace the spark plug if it is pitted, fouled, or cracked. 6. Add or drain oil to adjust the oil level in the engine crankcase to the Full mark on the dipstick.

Problem	Possible Cause	Corrective Action
The engine runs, but the machine discharges snow poorly or not at all.	1. The throttle is not in the Fast position when throwing snow.	1. Move the throttle to the Fast position.
	2. The machine is moving too fast to clear the snow.	2. Shift the machine into a lower gear.
	3. You are trying to remove too much snow per swath.	3. Reduce the amount of snow removed per swath.
	4. You are trying to remove extremely heavy or wet snow.	4. Don't overload the machine with extremely heavy or wet snow.
	5. The discharge chute is plugged.	5. Unclog the discharge chute.
	6. The auger/impeller drive belt is loose or is off the pulley.	6. Install and/or adjust the auger/impeller drive belt; refer to www.Toro.com for servicing information or take the machine to an Authorized Service Dealer.
	7. The auger/impeller drive belt is worn or broken.	7. Replace the auger/impeller drive belt; refer to www.Toro.com for servicing information or take the machine to an Authorized Service Dealer.
The discharge chute either does not lock into place or does not move.	1. The discharge chute latch is not properly adjusted.	1. Adjust the discharge chute latch.
The machine does not properly clear the snow off the surface.	1. The skids and/or scraper are not properly adjusted.	1. Adjust the skids and/or the scraper.
	2. The pressure in the tires is not equal.	2. Check and adjust the pressure in one or both tires.

Notes:

Notes:

Notes:

International Distributor List

Distributor:	Country:	Phone Number:	Distributor:	Country:	Phone Number:
Agrolanc Kft	Hungary	36 27 539 640	Maquiver S.A.	Colombia	57 1 236 4079
Asian American Industrial (AAI)	Hong Kong	852 2497 7804	Maruyama Mfg. Co. Inc.	Japan	81 3 3252 2285
B-Ray Corporation	Korea	82 32 551 2076	Mountfield a.s.	Czech Republic	420 255 704 220
Brisa Goods LLC	Mexico	1 210 495 2417	Mountfield a.s.	Slovakia	420 255 704 220
Casco Sales Company	Puerto Rico	787 788 8383	Munditol S.A.	Argentina	54 11 4 821 9999
Ceres S.A.	Costa Rica	506 239 1138	Norma Garden	Russia	7 495 411 61 20
CSSC Turf Equipment (pvt) Ltd.	Sri Lanka	94 11 2746100	Oslinger Turf Equipment SA	Ecuador	593 4 239 6970
Cyril Johnston & Co.	Northern Ireland	44 2890 813 121	Oy Hako Ground and Garden Ab	Finland	358 987 00733
Cyril Johnston & Co.	Republic of Ireland	44 2890 813 121	Parkland Products Ltd.	New Zealand	64 3 34 93760
Fat Dragon	China	886 10 80841322	Perfetto	Poland	48 61 8 208 416
Femco S.A.	Guatemala	502 442 3277	Pratoverde SRL.	Italy	39 049 9128 128
FIVEMANS New-Tech Co., Ltd	China	86-10-6381 6136	Prochaska & Cie	Austria	43 1 278 5100
ForGarder OU	Estonia	372 384 6060	RT Cohen 2004 Ltd.	Israel	972 986 17979
G.Y.K. Company Ltd.	Japan	81 726 325 861	Riversa	Spain	34 9 52 83 7500
Geomechaniki of Athens	Greece	30 10 935 0054	Lely Turfcare	Denmark	45 66 109 200
Golf international Turizm	Turkey	90 216 336 5993	Lely (U.K.) Limited	United Kingdom	44 1480 226 800
Hako Ground and Garden	Sweden	46 35 10 0000	Solvert S.A.S.	France	33 1 30 81 77 00
Hako Ground and Garden	Norway	47 22 90 7760	Spypros Stavrinides Limited	Cyprus	357 22 434131
Hayter Limited (U.K.)	United Kingdom	44 1279 723 444	Surge Systems India Limited	India	91 1 292299901
Hydroturf Int. Co Dubai	United Arab Emirates	97 14 347 9479	T-Markt Logistics Ltd.	Hungary	36 26 525 500
Hydroturf Egypt LLC	Egypt	202 519 4308	Toro Australia	Australia	61 3 9580 7355
Irrimac	Portugal	351 21 238 8260	Toro Europe NV	Belgium	32 14 562 960
Irrigation Products Int'l Pvt Ltd.	India	0091 44 2449 4387	Valtech	Morocco	212 5 3766 3636
Jean Heybroek b.v.	Netherlands	31 30 639 4611	Victus Emak	Poland	48 61 823 8369

European Privacy Notice

The Information Toro Collects
Toro Warranty Company (Toro) respects your privacy. In order to process your warranty claim and contact you in the event of a product recall, we ask you to share certain personal information with us, either directly or through your local Toro company or dealer.

The Toro warranty system is hosted on servers located within the United States where privacy law may not provide the same protection as applies in your country.

BY SHARING YOUR PERSONAL INFORMATION WITH US, YOU ARE CONSENTING TO THE PROCESSING OF YOUR PERSONAL INFORMATION AS DESCRIBED IN THIS PRIVACY NOTICE.

The Way Toro Uses Information
Toro may use your personal information to process warranty claims, to contact you in the event of a product recall and for any other purpose which we tell you about. Toro may share your information with Toro's affiliates, dealers or other business partners in connection with any of these activities. We will not sell your personal information to any other company. We reserve the right to disclose personal information in order to comply with applicable laws and with requests by the appropriate authorities, to operate our systems properly or for our own protection or that of other users.

Retention of your Personal Information
We will keep your personal information as long as we need it for the purposes for which it was originally collected or for other legitimate purposes (such as regulatory compliance), or as required by applicable law.

Toro's Commitment to Security of Your Personal Information
We take reasonable precautions in order to protect the security of your personal information. We also take steps to maintain the accuracy and current status of personal information.

Access and Correction of your Personal Information
If you would like to review or correct your personal information, please contact us by email at legal@toro.com.

Australian Consumer Law

Australian customers will find details relating to the Australian Consumer Law either inside the box or at your local Toro Dealer.

The Toro Warranty and The Toro GTS Starting Guarantee

Conditions and Products Covered

The Toro Company and its affiliate, Toro Warranty Company, pursuant to an agreement between them, jointly promise to repair for the original purchaser[1] the Toro Product listed below if defective in materials or workmanship or if the Toro GTS (Guaranteed to Start) engine will not start on the first or second pull, provided the routine maintenance required in the *Operator's Manual* have been performed.

This warranty covers the cost of parts and labor, but you must pay transportation costs.

The following time periods apply from the original date of purchase:

Products	**Warranty Period**
Snowthrowers	
• Single Stage	2 years Residential Use[2] 45 Days Commercial Use
—Engine	2 years GTS Guarantee, Residential Use[2]
• SnowMax	3 years Residential Use[2] 45 Days Commercial Use
—Chute, chute deflector, and lower chute	Lifetime (original owner only)[1]
• Two Stage	3 years Residential Use[2] 45 Days Commercial Use
—Chute, chute deflector and impeller housing cover	Lifetime (original owner only)[1]
Electric Snowthrowers	2 years Residential Use[2] No Warranty for Commercial Use

[1]Original Purchaser means the person who originally purchased the Toro Product.

[2]Residential use means use of the product on the same lot as your home. Use at more than one location is considered commercial use and the commercial use warranty would apply.

Owner Responsibilities

You must maintain your Toro Product by following the maintenance procedures described in the *Operator's Manual*. Such routine maintenance, whether performed by a dealer or by you, is at your expense.

Instructions for Obtaining Warranty Service

If you think that your Toro Product contains a defect in materials or workmanship, follow this procedure:

1. Contact your seller to arrange service of the product. If for any reason it is impossible for you to contact your seller, you may contact any Toro Authorized Distributor to arrange service. See attached Distributor List.
2. Bring the product and your proof of purchase (sales receipt) to the servicing outlet. If for any reason you are dissatisfied with the servicing outlet's analysis or with the assistance provided, contact us at:

   Toro Warranty Company
   Toro Customer Care Department, RLC Division
   8111 Lyndale Avenue South
   Bloomington, MN 55420-1196 USA
   001–952–948–4707

Items and Conditions Not Covered

There is no other express warranty except for special emission system coverage and engine warranty coverage on some products. This express warranty does not cover the following:

- Cost of regular maintenance service or parts, such as filters, fuel, lubricants, oil changes, spark plugs, or brake and clutch adjustments
- Components failing due to normal wear
- Any product or part which has been altered or misused or neglected and requires replacement or repair due to accidents or lack of proper maintenance
- Pickup and delivery charges
- Repairs or attempted repairs by anyone other than an Authorized Toro Service Dealer
- Repairs necessary due to failure to follow recommended fuel procedure (consult *Operator's Manual* for more details)
  - Removing contaminants from the fuel system is not covered
  - Use of old fuel (more than one month old) or fuel which contains more than 10% ethanol or more that 15% MTBE
  - Failure to drain the fuel system prior to any period of non-use over one month
- Repairs or adjustments to correct starting difficulties due to the following:
  - Failure to follow proper maintenance procedures or recommended fuel procedure
- Special operational conditions where starting may require more than two pulls:
  - First time starts after extended period of non-use over three months or seasonal storage
  - Improper starting procedures - if you are having difficulty starting your unit, please check the *Operator's Manual* to ensure that you are using the correct starting procedures. This can save an unnecessary visit to an Authorized Toro Service Dealer.

General Conditions

The purchaser is covered by the national laws of each country. The rights to which the purchaser is entitled with the support of these laws are not restricted by this warranty.