Form No. 3397-145 Rev A

TORO®

Count on it.

Parts Catalog

Groundsmaster® 7210 Series Traction Unit

Model No. 30695—Serial No. 315000501 and Up

Register at www.Toro.com.
Original Instructions (EN)

3397-145 A

Ordering Replacement Parts

To order replacement parts, please supply the part number, the quantity, and the description of each part desired.

Understanding Reference Numbers

Each identified part in an illustration has a reference number. The reference number for a part also appears in the parts list, along with other information about the part.

This catalog uses two special reference number formats, one to indicate parts in a service assembly and another to indicate the quantity of a given part in an illustration.

Service Assembly Reference Numbers

Parts in service assemblies have reference numbers in the form a:b. The a represents the reference number of the entire service assembly and the b represents a sequential number unique to each part within the service assembly.

For example, a wheel assembly might be identified by reference number 6, the tire by 6:1, the valve by 6:2, and the wheel by 6:3. When you order the assembly identified by reference number 6, you receive all parts identified by reference numbers 6:1,6:2, and 6:3. However, you may also order any part individually. Reference numbers of this type appear in illustration and in parts lists.

Reference Numbers Indicating Quantity

In an illustration, if a reference number indicates more than one part, the reference number has the form nX y. The n represents the quantity of the part, the X is the multiplication symbol, and the y represents the reference number.

For example, in an illustration, the reference number 2X 37 means that two of the parts identified by reference number 37 are indicated.

List of Abbreviations

AR: as required

ASM: assembly

BBC: blade brake control

BHTF: button head thread forming

CARR: carriage

CCW: counter clockwise

CW: clockwise

DEG: degrees

DPA: Dual Point Adjustment

ECM: electronic control module

EXT: external

FH: flat head

GA: gauge

HD: heavy-duty

HF: hex flange

HH: hex head

HHF: hex head flange

HHFTF: hex head flange thread forming

HJ: hex jam

HLH: hex lag head

HOC: height-of-cut

HP: high pressure

HSBH: hex socket button head

HSFH: hex socket flat head

HSH: hex socket head

HWH: hex washer head

HWHTF: hex washer head thread forming

HYD: hydraulic

LH: left hand

LP: low pressure

LPG: Liquefied Petroleum Gas

NI: nylon insert

NPTF: national pipe thread fine

PFH: phillips flat head

PPH: phillips pan head

PPHTF: phillips pan head thread forming

PRH: phillips round head

PTH: phillips truss head

PTO: power-take-off

RH: right hand

ROPS: roll-over protection system

RRB: rear roller brush

SFH: slotted fillister head

SHH: slotted hex head

SHWH: slotted hex washer head

SPH: slotted pan head

SQH: square head

SRH: slotted round head

STD: standard

TAP: self tapping

TTH: torx truss head

Contents

Transmission Assembly . . . 6
Charge Pump Housing Assembly Transmission Assembly No. 131-5510 . . . 8
Center Section Assembly Transmission Assembly No. 131-5510 . . . 10
Gear Case and Clutch Assembly Transmission Assembly No. 131-5510 . . . 12
Driveshaft Assembly No. 110-3575 . . . 14
Hydraulic Gear Pump Assembly No. 112-9542 . . . 15
Rear Drive Assembly . . . 16
Hydraulic Motor Assembly No. 108-5155 . . . 17
Hydraulic Motor Assembly No. 108-5230 . . . 18
LH Brake Caliper Assembly No. 120-0013 . . . 19
RH Brake Caliper Assembly No. 120-0014 . . . 20
Brake Handle Assembly . . . 21
Traction Control Assembly . . . 22
Link Assembly No. 112-5099 . . . 23
RH Lever Assembly No. 125-2687 . . . 24
Control Panel Assembly . . . 25
Left-Hand and Right-Hand Fuel Tank Assembly . . . 26
LH Fuel Tank Assembly No. 131-5509 . . . 27
RH Fuel Tank Assembly No. 110-8236 . . . 28
Fuel System Assembly . . . 29
Seat and Seat Plate Assembly . . . 30
Seat Assembly No. 107-2286 . . . 31
Carrier Frame and Weight Assembly . . . 32
Carrier Frame Assembly No. 121-3356 . . . 33
Lift Valve and Cylinder Assembly . . . 34
Valve Assembly No. 131-1934 . . . 35
Hydraulic Cylinder Assembly No. 110-9834 . . . 36
Caster Wheel Assembly . . . 37
Caster Wheel Assembly No. 108-9954 . . . 38
Deck Lift Assembly . . . 39
Battery and Relay Assembly . . . 40
Main Wire Harness Assembly . . . 41
Engine Harness Assembly . . . 42
Hydraulic Reservoir Assembly . . . 43
Hydraulic Reservoir Assembly No. 110-8237 . . . 44
Hydraulic Hose Routing Assembly . . . 45
Air Cleaner Assembly . . . 46
Air Cleaner Assembly No. 104-3428 . . . 47
Frame and Upper-ROPS Assembly . . . 48
Engine Assembly . . . 49
Radiator Assembly . . . 50
Cooling Assembly No. 121-3330 . . . 52
Hood Assembly . . . 53
Cylinder Block Assembly . . . 54
Gear Housing Assembly . . . 56
Cylinder Head and Cover Assembly . . . 58
Suction Manifold Assembly . . . 60
Exhaust Manifold Assembly . . . 62
Diesel Particulate Filter Assembly . . . 64
Flywheel Housing and Oil Sump Assembly . . . 66
Camshaft and Driving Gear Assembly . . . 67
Crankshaft and Piston Assembly . . . 68
Lubrication and Oil System Assembly . . . 69
Cooling Water System Assembly . . . 70

© 2015—The Toro® Company
8111 Lyndale Avenue South
Bloomington, MN 55420

Contact us at www.Toro.com.
Printed in the USA.
All Rights Reserved

Contents (continued)

Fuel System Assembly 72
Fuel Injection Valve Assembly 73
Starting Motor Assembly 74
Generator Assembly 76
Fuel Line Assembly 78
Electronic Control Unit Assembly 79
Electric Parts Assembly 80
Gasket Set 81
Attachments and Accessories 82

Transmission Assembly

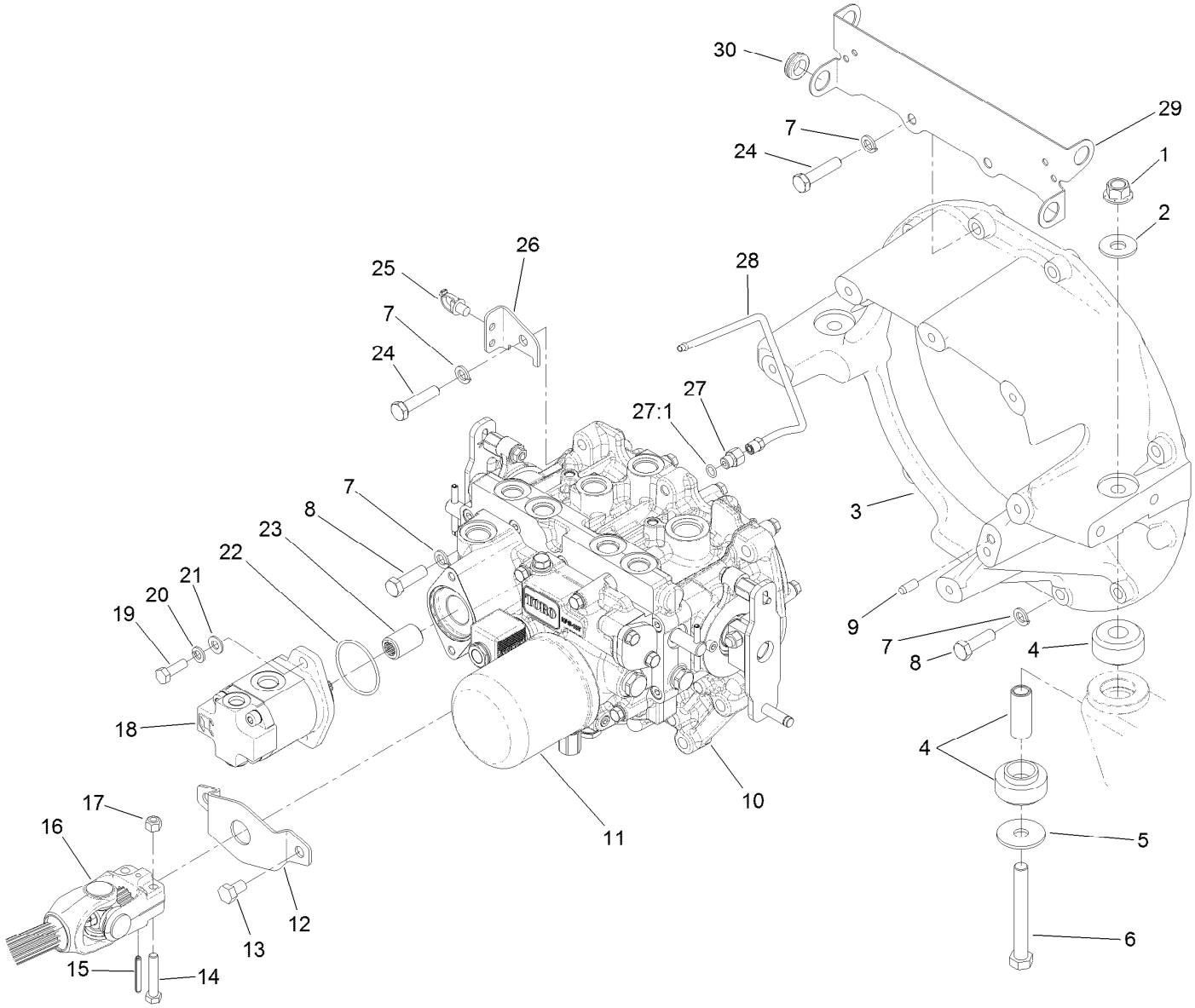

Transmission Assembly (continued)

Ref.	Part Number	Qty.	Description
1	99-5107	2	Nut-Lock
2	3256-6	2	Washer-Flat
3	125-2836	1	Housing-Flywheel
4	120-9168	2	Mount-Rubber
5	86-1990	2	Washer-Thrust
6	325-17	2	Screw-HH
7	48-9590	16	Washer-Lock
8	33115-035	3	Screw-HH
9	87-1910	2	Pin-Dowel
10	131-5510	1	Transmisson ASM
11	108-5194	1	Filter-Oil, HYD
12	114-4088	1	Shield-Seal
13	33115-016	2	Screw-HH
14	322-9	4	Screw-HH
15	32121-34	2	Pin-Roll
16	110-3575	1	Driveshaft ASM

Ref.	Part Number	Qty.	Description
17	3296-29	4	Nut-Lock, NI
18	112-9542	1	HYD Gear Pump ASM
19	33114-025	2	Screw-HH
20	3253-4	2	Washer-Lock
21	3256-23	2	Washer-Flat
22	108-9919	1	O-Ring
23	108-9920	1	Coupler-Spline
24	33115-045	13	Screw-HH
25	32180-030	1	Clip-Tie
26	120-0239	1	Support-Tube
27	110-5536	1	Fitting-HYD, Adapter
27:1	237-78	1	O-Ring
28	110-5537	1	Tube
29	121-3360-03	1	Bracket-Wire
30	99-3481	4	Grommet

Charge Pump Housing Assembly
Transmission Assembly No. 131-5510

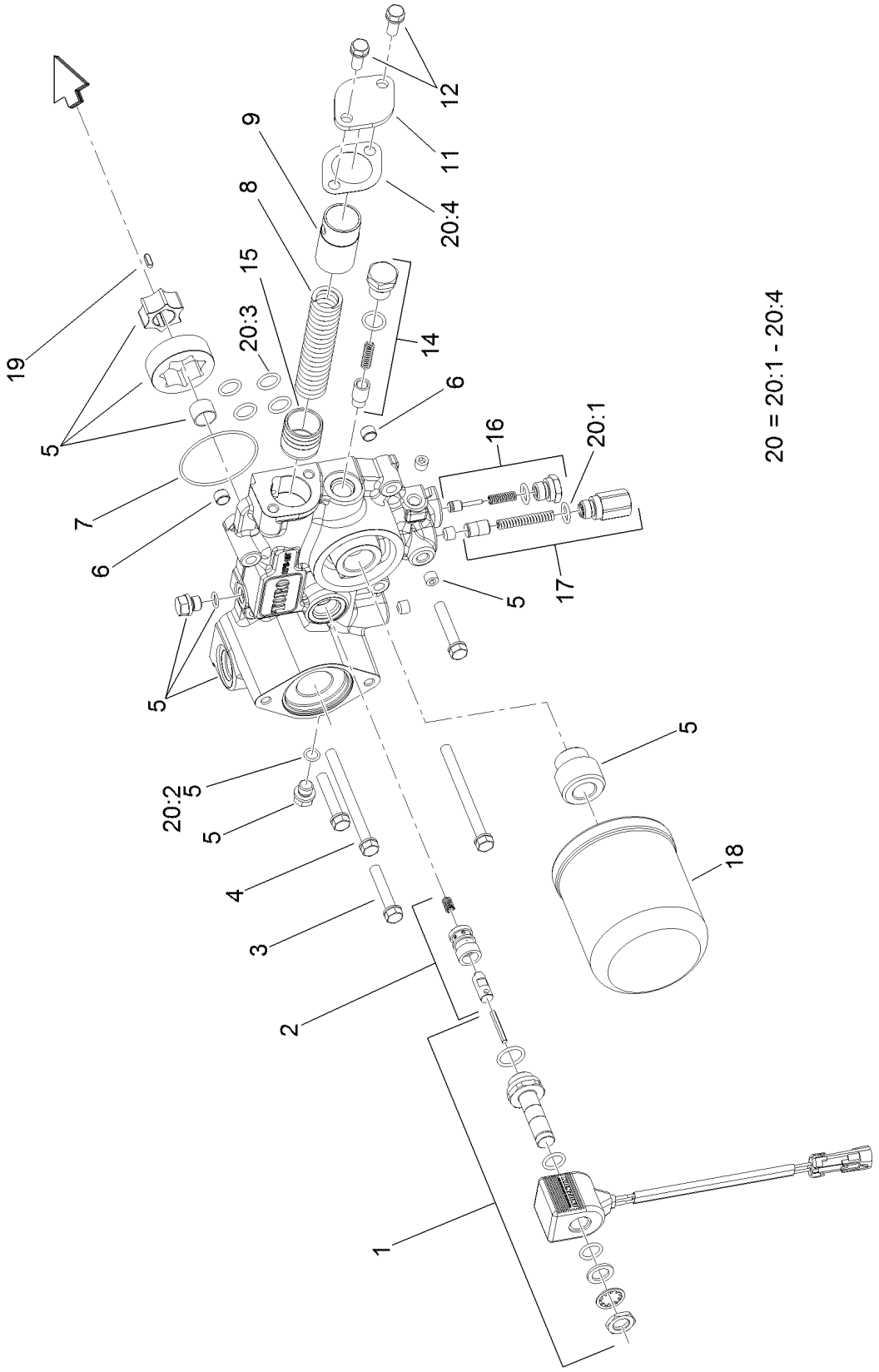

Charge Pump Housing Assembly
Transmission Assembly No. 131-5510 (continued)

Ref.	Part Number	Qty.	Description
1	107-0851	1	Solenoid ASM
2	107-0850	1	Solenoid Valve ASM
3	107-0863	3	Bolt
4	107-0864	2	Bolt
5	107-0840	1	Pump Body ASM
6	107-0848	2	Pin
7	107-0856	1	O-Ring
8	107-0845	1	Spring
9	107-0844	1	Collar
11	107-0846	1	Cover
12	93-0457	2	Bolt And Washer ASM

Ref.	Part Number	Qty.	Description
14	107-0843	1	Filter Bypass Valve ASM
15	107-0818	1	Piston
16	107-0842	1	Charge Relief Valve ASM
17	107-0841	1	Pressure Valve ASM
18	108-5194	1	Filter-Oil, HYD
19	107-0865	1	Key
20	107-0855	1	Charge Pump Seal Kit
20:1	93-0418	2	O-Ring
20:2	107-0817	2	O Ring-Plug
20:3	104-3298	6	Packing
20:4	107-0847	1	Gasket

Center Section Assembly
Transmission Assembly No. 131-5510

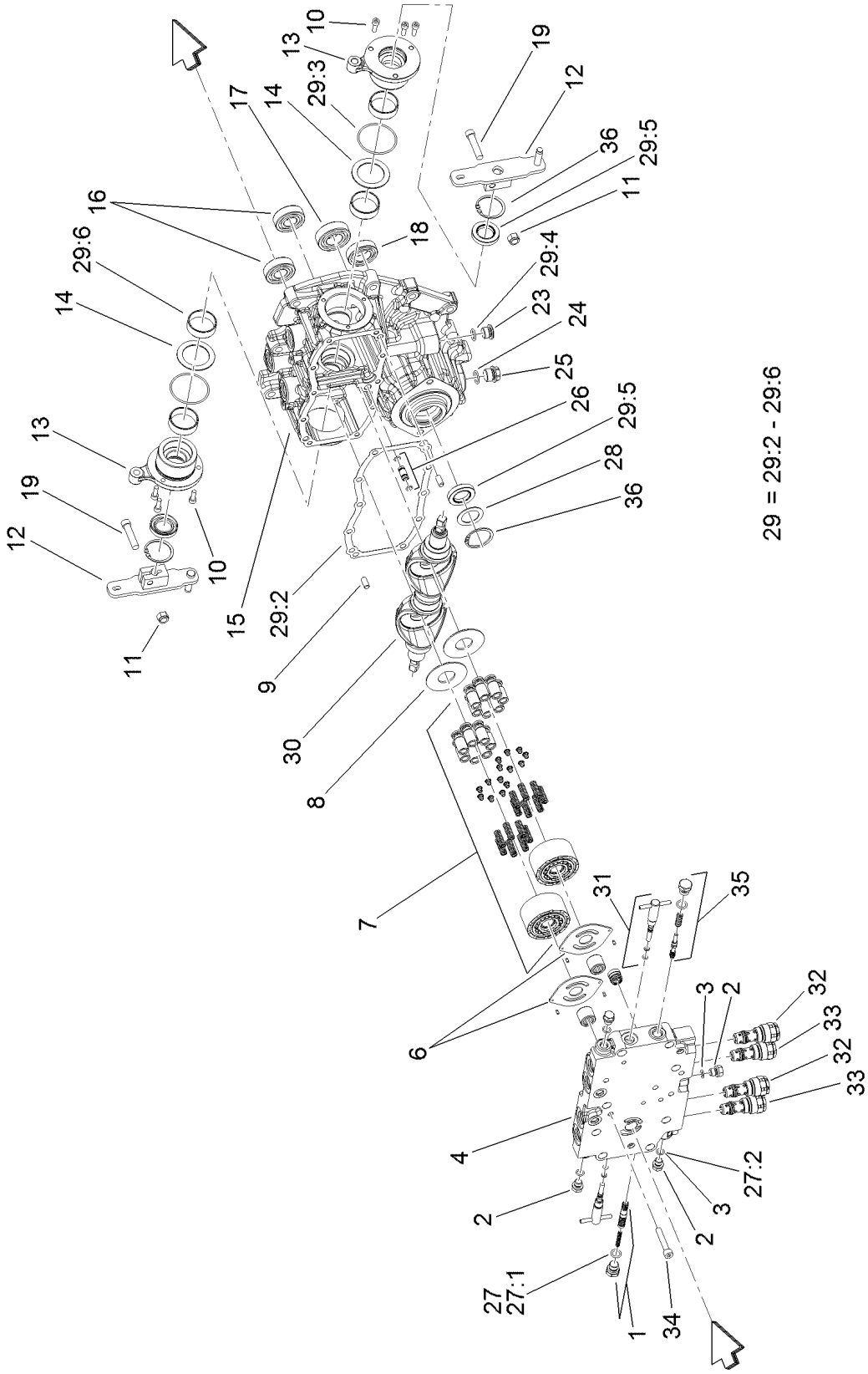

Center Section Assembly
Transmission Assembly No. 131-5510 (continued)

Ref.	Part Number	Qty.	Description
1	107-0807	1	Valve-Flushing, RH
2	107-0857	6	Plug
3	107-0817	6	O Ring-Plug
4	121-3377	1	Center Case, Complete
6	107-0805	2	Plate-Valve
7	107-0824	2	Cylinder Block ASM
8	107-0830	2	Plate-Thrust
9	92-0765	4	Pin-Parallel
10	107-0859	6	Bolt
11	120-6681	2	U-Nut
12	120-6680	2	Arm-Control
13	107-0832	2	Side Cover ASM
14	107-0829	2	Washer
15	120-5151	1	Pump Housing ASM
16	107-0826	2	Bearing
17	107-0821	1	Bearing
18	107-0838	1	Bearing
19	120-6682	2	Bolt
23	107-0861	1	Plug-NPTF
24	237-79	1	O-Ring
25	107-0867	1	Plug
26	107-0812	1	Pipe
27	107-0852	1	Center Case Seal Kit
27:1	93-0418	2	O-Ring
27:2	107-0817	6	O Ring-Plug
28	107-0813	1	Spacer
29	107-0853	1	Pump Housing Seal Kit
29:2	107-0810	1	Gasket-Case, Center
29:3	107-0817	2	O Ring-Plug
29:4	104-3298	1	Packing
29:5	107-0814	3	Seal
29:6	107-0825	4	Ring-Seal
30	120-6679	2	Plate-Swash
31	107-0808	2	Valve-Bypass
32	107-0804	2	Valve-Rear
33	107-0803	2	Valve-Front
34	107-0863	8	Bolt
35	107-0806	1	Valve-Flushing, LH
36	92-0757	2	Ring-Snap

Gear Case and Clutch Assembly
Transmission Assembly No. 131-5510

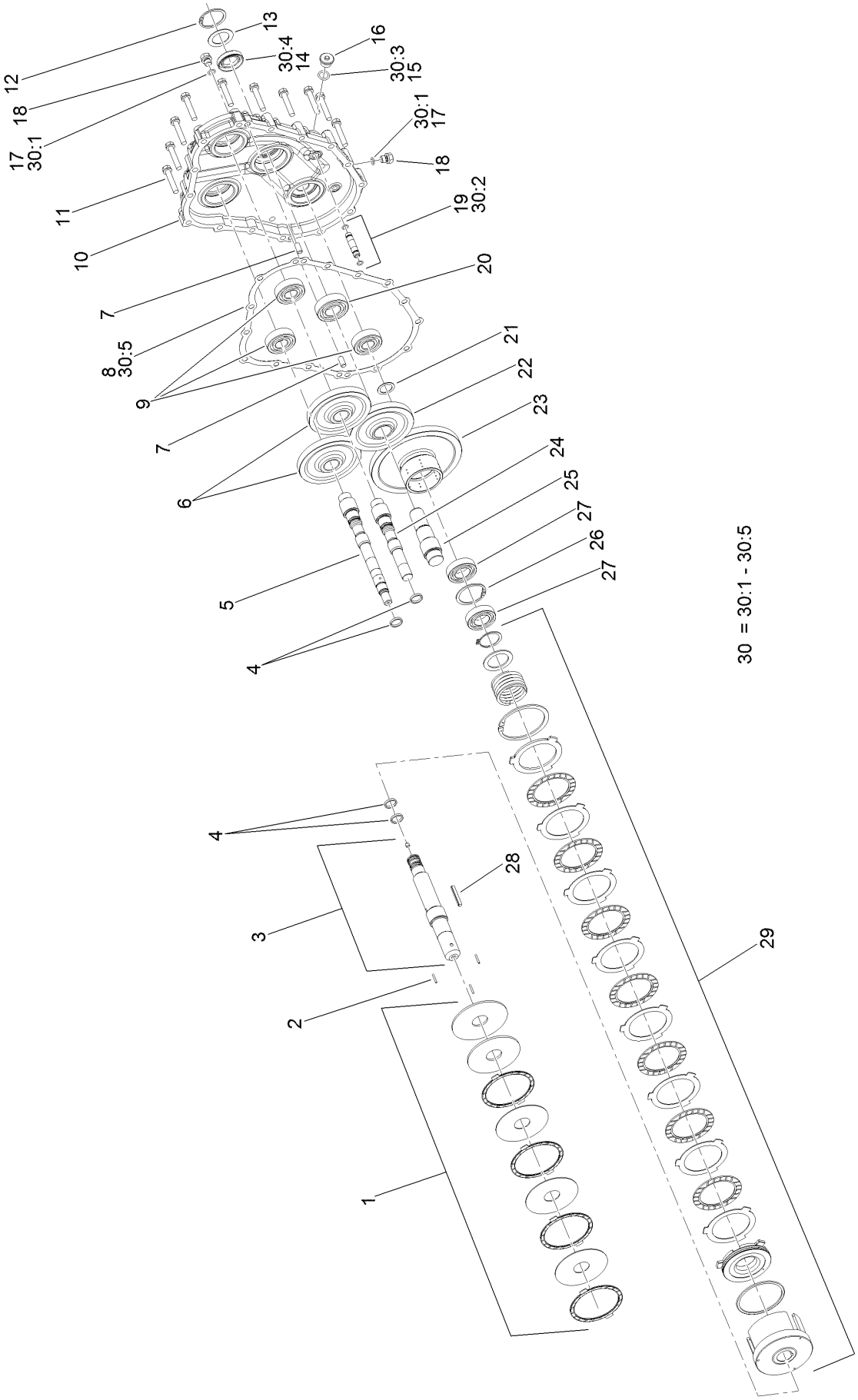

Gear Case and Clutch Assembly
Transmission Assembly No. 131-5510 (continued)

Ref.	Part Number	Qty.	Description
1	107-0839	1	PTO Brake ASM
2	107-0837	3	Rod-Push
3	107-0833	1	PTO Shaft ASM
4	107-0825	2	Ring-Seal
5	107-0827	1	Shaft-Pump
6	107-0823	2	Gear-Pump
7	92-0765	4	Pin-Parallel
8	107-0816	1	Gasket-Housing, Gear
9	107-0826	4	Bearing
10	120-5152	1	Housing-Case, Gear
11	107-0863	13	Bolt
12	92-0757	1	Ring-Snap
13	107-0813	1	Spacer
14	107-0814	1	Seal
15	104-3298	1	Packing
16	107-0861	1	Plug-NPTF
17	107-0817	6	O Ring-Plug
18	107-0857	6	Plug
19	107-0811	1	Pipe
20	107-0821	2	Bearing
21	107-0836	1	Spacer
22	107-0820	1	Gear-Input
23	107-0834	1	Gear-PTO
24	107-0822	1	Shaft-Pump
25	107-0819	1	Shaft-Input
26	92-0758	1	Ring-Snap
27	107-0838	3	Bearing
28	107-0866	1	Key
29	107-0835	1	Clutch Cylinder ASM
30	107-0854	1	Gear Housing Seal Kit
30:1	107-0817	2	O Ring-Plug
30:2		2	O-Ring ●
30:3	104-3298	1	Packing
30:4	107-0814	1	Seal
30:5	107-0816	1	Gasket-Housing, Gear

● Not serviced separately

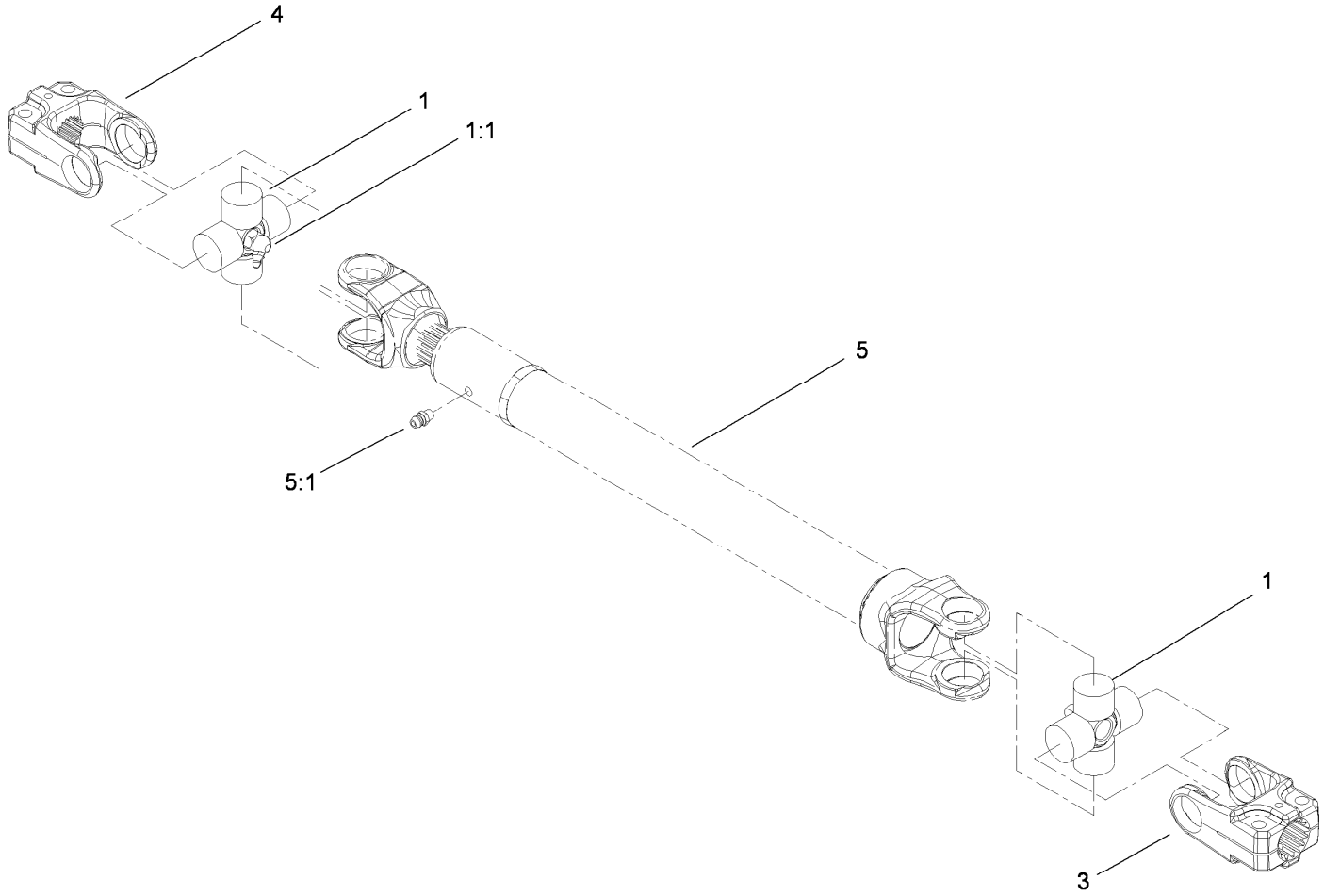

Driveshaft Assembly No. 110-3575

Ref.	*Part Number*	*Qty.*	*Description*
1	112-1687	2	Cross And Bearing Kit
1:1	62-3820	1	Fitting-Grease
3	54-9040	1	Yoke-End
4	54-9090	1	Yoke-End
5		1	Tube-Yoke, Slip ●
5:1	302-22	1	Fitting-Grease

● Not serviced separately

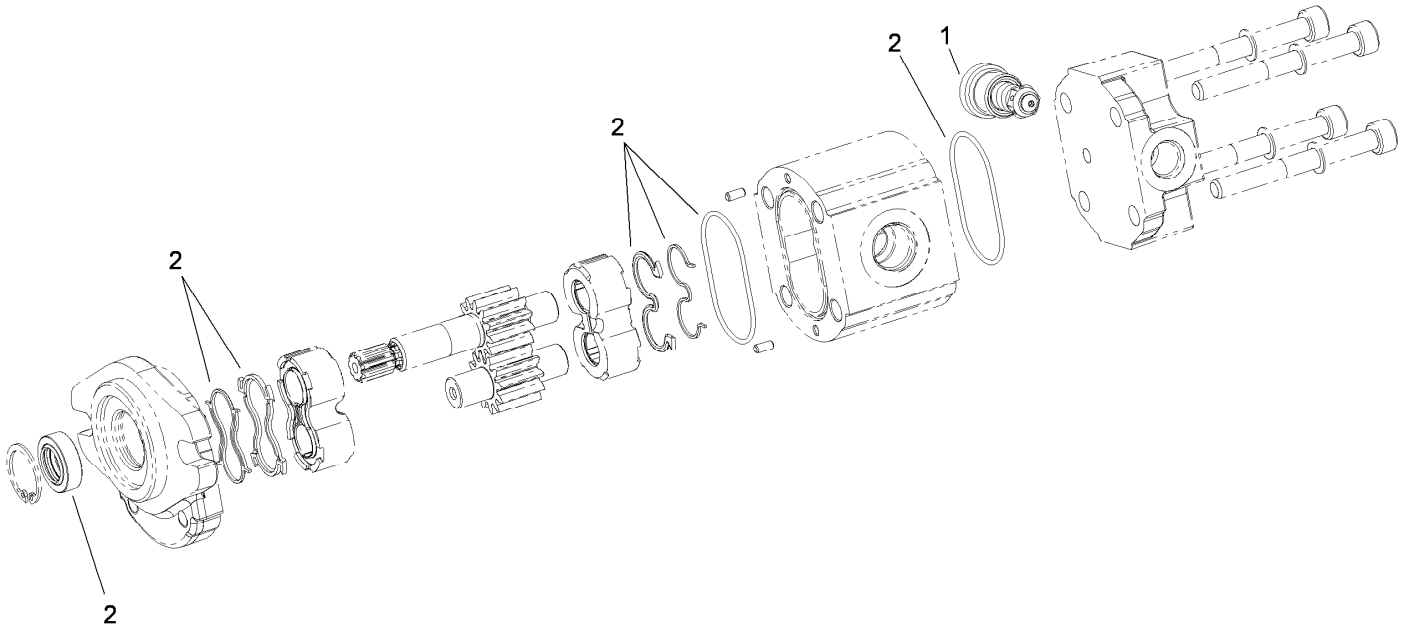

Hydraulic Gear Pump Assembly No. 112-9542

Ref.	*Part Number*	*Qty.*	*Description*
1	112-0198	1	Valve
2	112-0199	1	Seal Kit

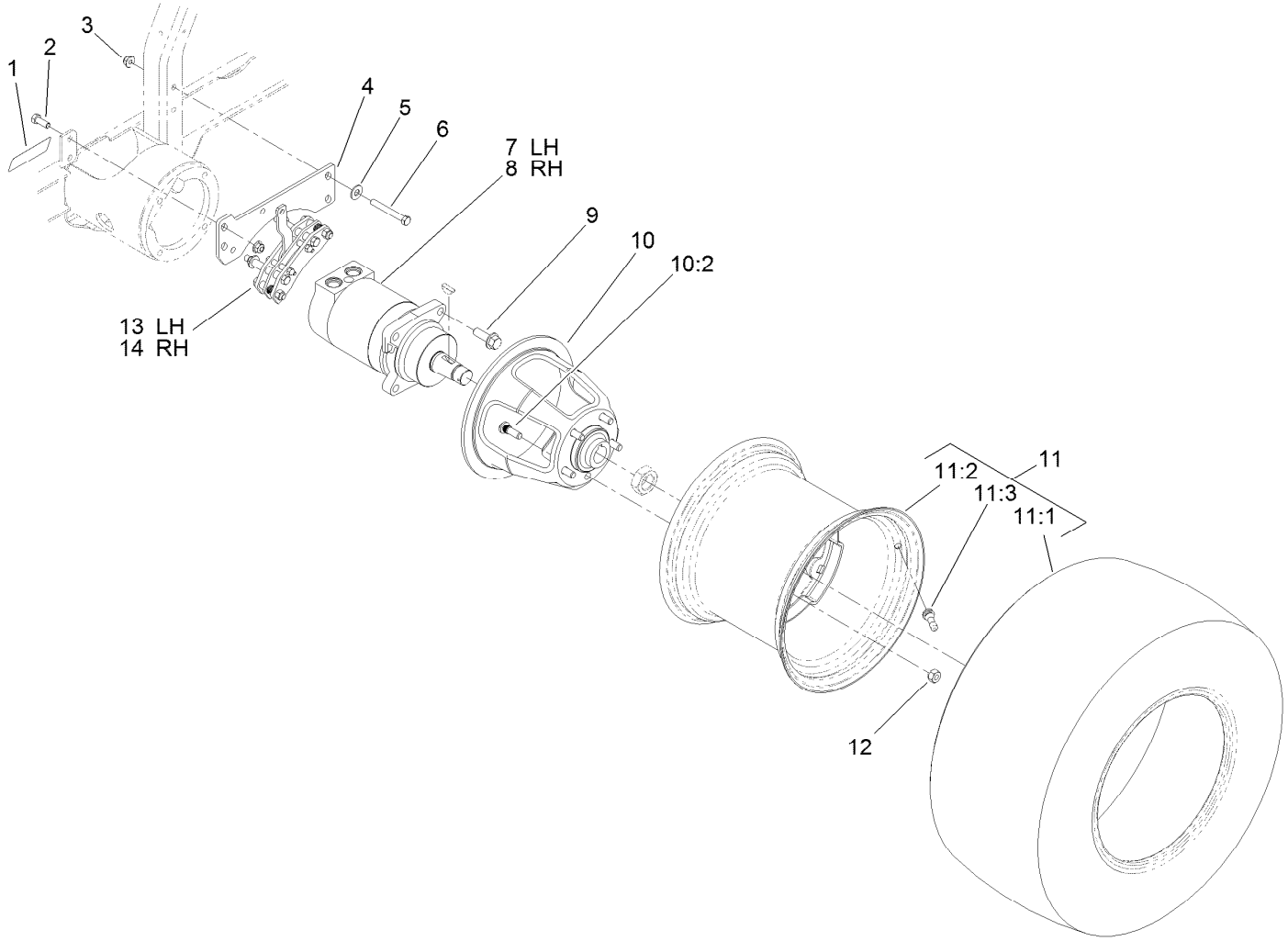

Rear Drive Assembly

Ref.	Part Number	Qty.	Description
1	106-9206	2	Decal-Torque, Wheel
2	323-6	4	Screw-HH
3	104-8301	8	Nut-Flange, NI
4	112-9550-03	2	Bracket-Brake
5	3256-4	4	Washer-Flat
6	323-14	4	Screw-HH
7	108-5155	1	LH HYD Motor ASM
8	108-5230	1	RH HYD Motor ASM
9	100-6116	8	Screw-HHF

Ref.	Part Number	Qty.	Description
10	110-5535	2	Wheel Hub ASM
10:2	87-8730	5	Stud
11	106-7864	2	Tire And Wheel ASM
11:1	106-7868	1	Tire
11:2	87-6750	1	Wheel
11:3	232-27	1	Stem-Valve
12	23-7270	10	Nut-Lug
13	120-0013	1	LH Brake Caliper ASM
14	120-0014	1	RH Brake Caliper ASM

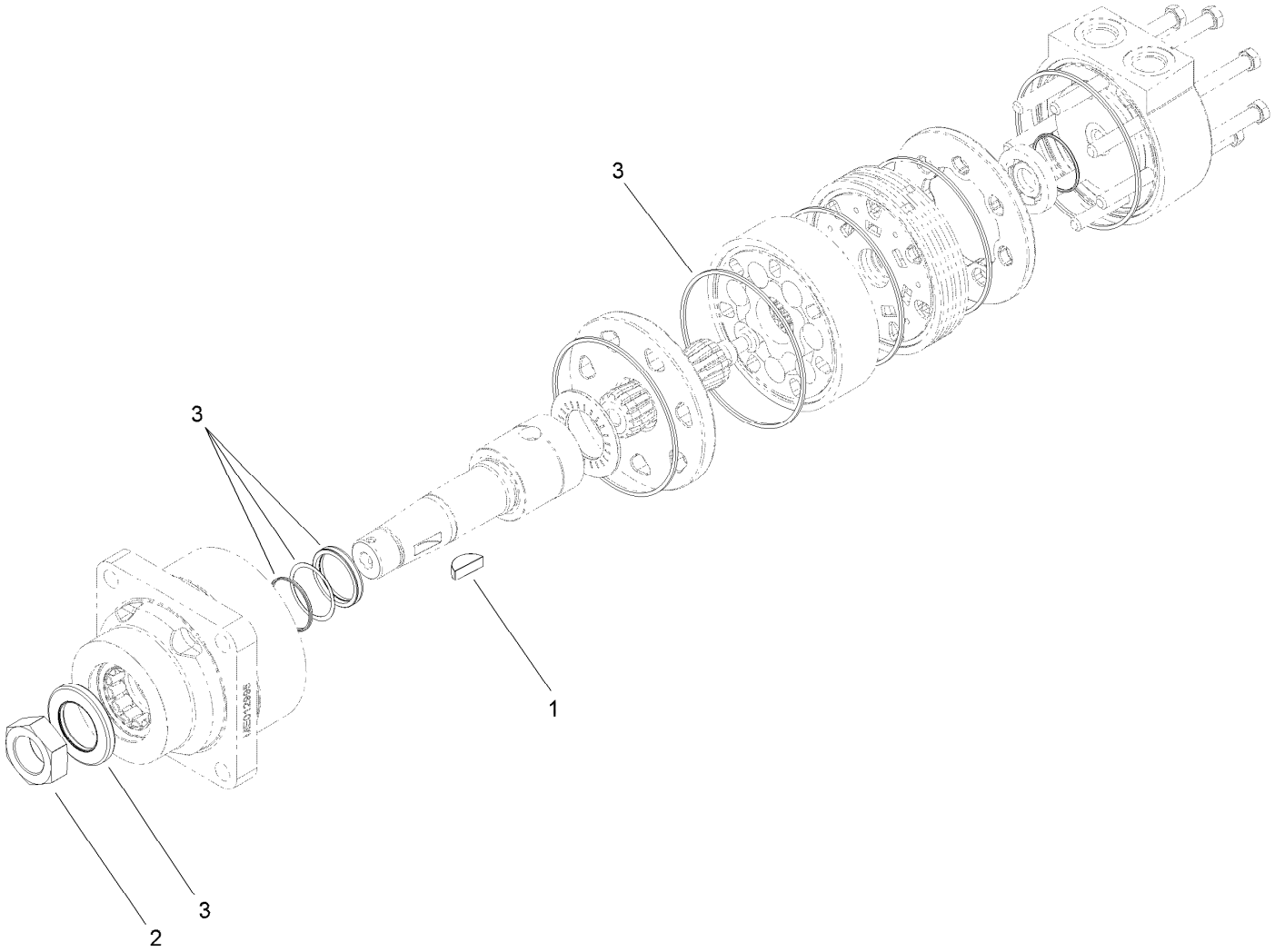

Hydraulic Motor Assembly No. 108-5155

Ref.	*Part Number*	*Qty.*	*Description*
1	3257-42	1	Key-Woodruff
2	107-9319	1	Nut-Hex
3	112-8405	1	Seal Kit

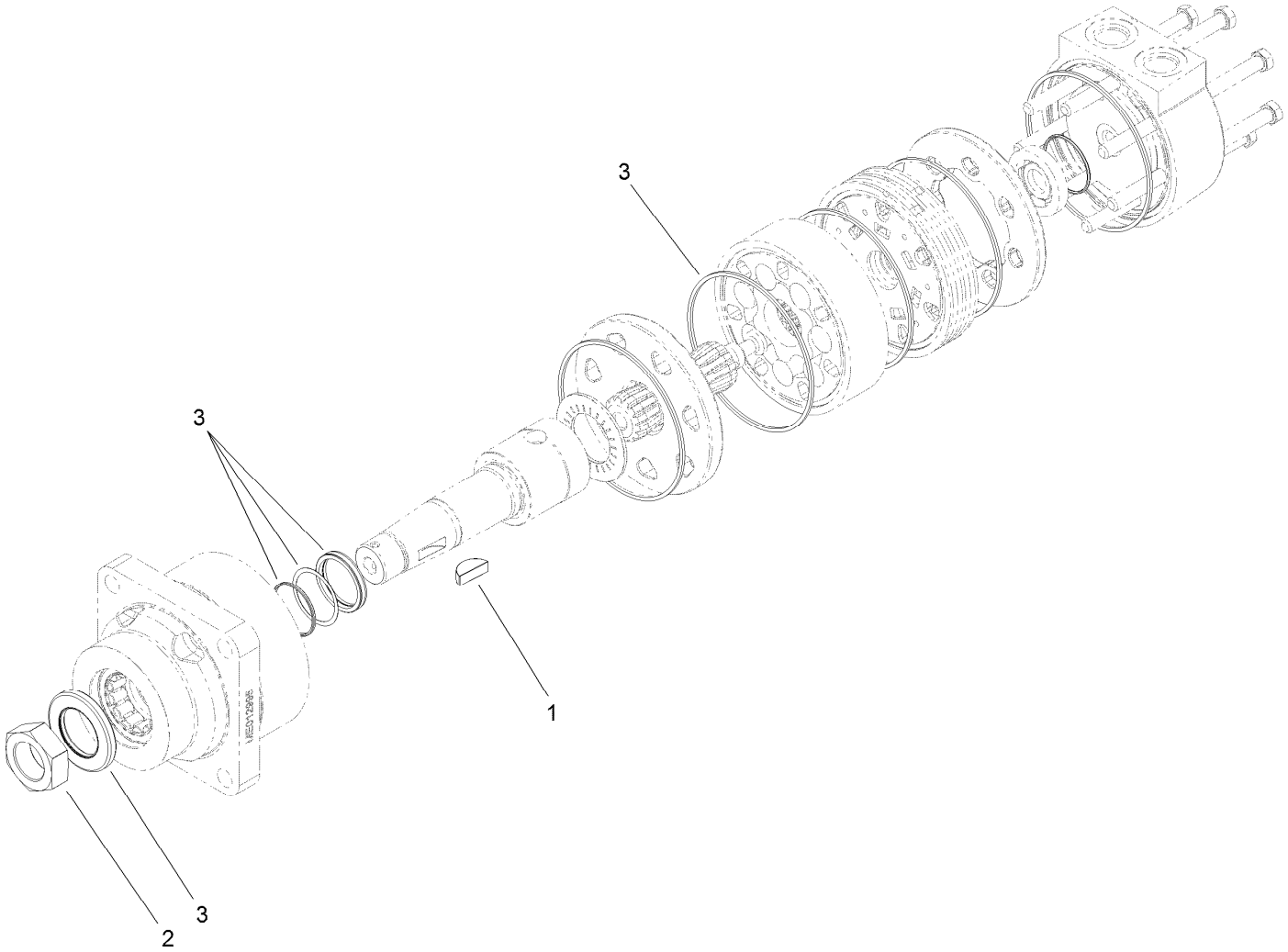

Hydraulic Motor Assembly No. 108-5230

Ref.	*Part Number*	*Qty.*	*Description*
1	3257-42	1	Key-Woodruff
2	107-9319	1	Nut-Hex
3	112-8405	1	Seal Kit

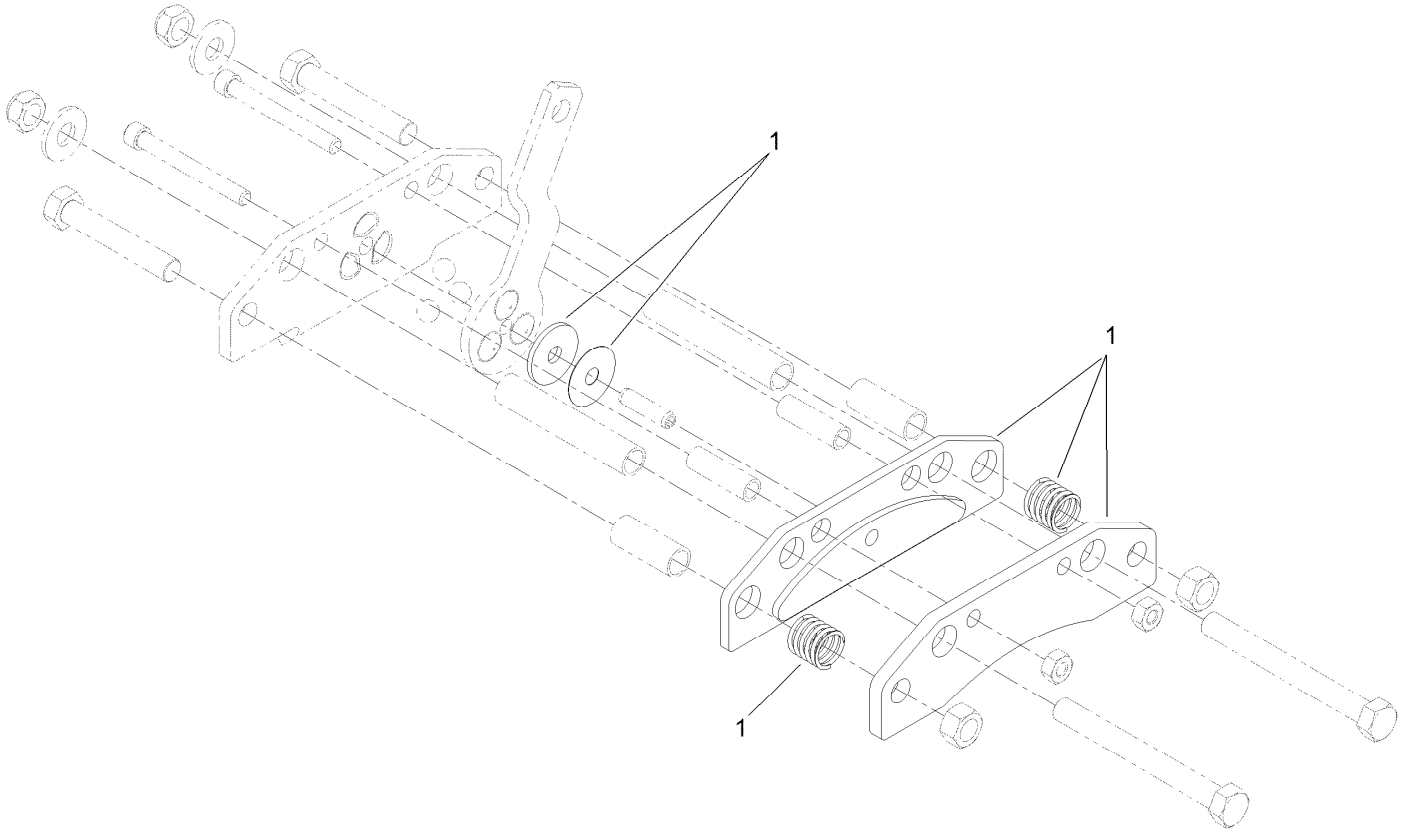

LH Brake Caliper Assembly No. 120-0013

Ref.	*Part Number*	*Qty.*	*Description*
1	120-0015	1	Replacement Brake Pad Service Kit

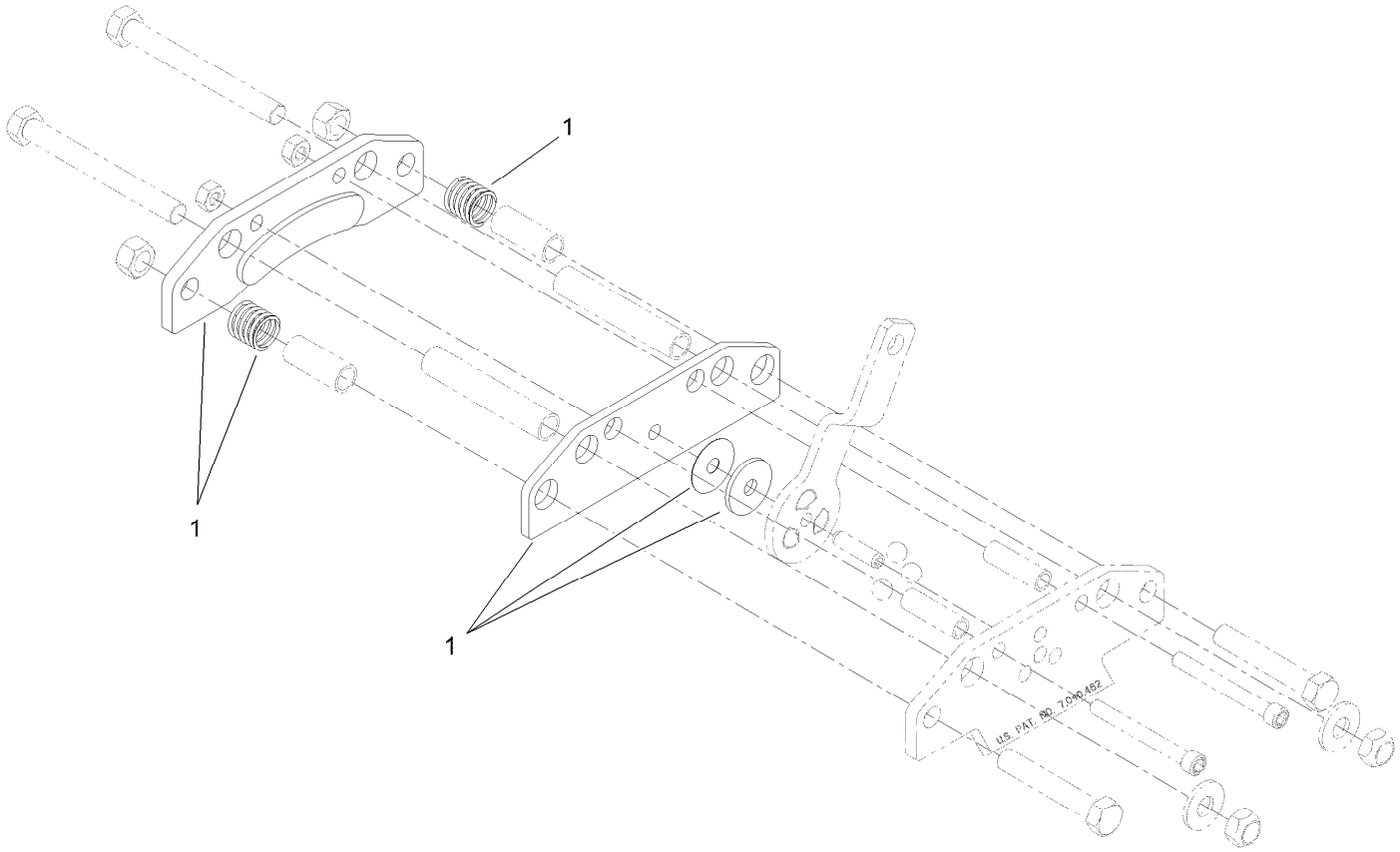

RH Brake Caliper Assembly No. 120-0014

Ref.	*Part Number*	*Qty.*	*Description*
1	120-0015	1	Replacement Brake Pad Service Kit

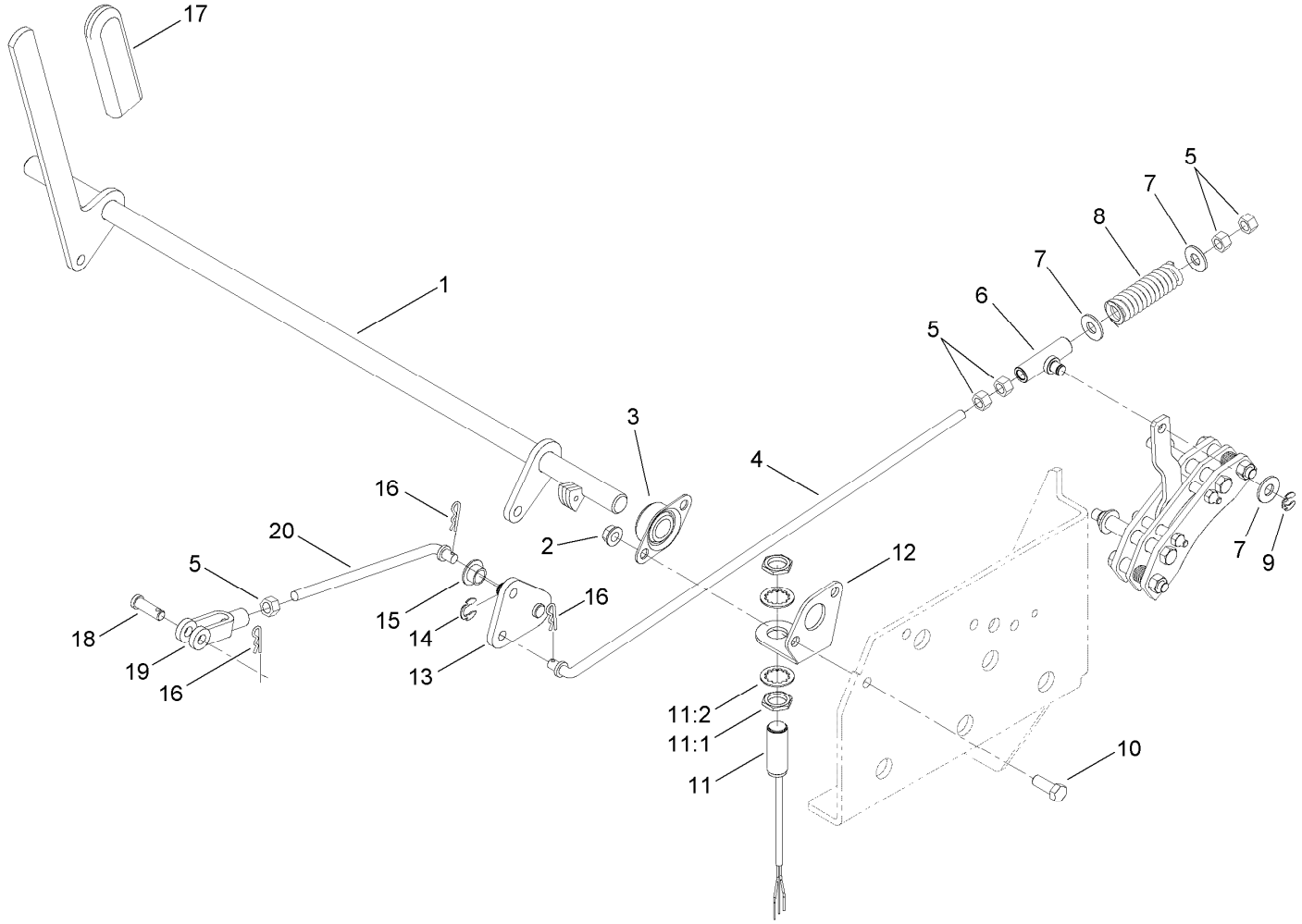

Brake Handle Assembly

Ref.	Part Number	Qty.	Description
1	117-5582-03	1	Handle-Brake
2	3290-357	4	Nut-HHF, Whiz
3	1-633102	2	Bearing-Flange, Side
4	120-0009	2	Rod-Brake
5	3219-3	10	Nut-Hex
6	112-1676	2	Swivel
7	3256-4	6	Washer-Flat
8	109-2230	2	Spring-Compression
9	32151-47	2	Ring-Retaining
10	323-6	4	Screw-HH
11	115-5300	1	Proximity Switch ASM

Ref.	Part Number	Qty.	Description
11:1	117-3207	2	Nut-Hex
11:2	117-3208	2	Washer-Lock, Internal Tooth
12	117-5572	1	Bracket-Switch
13	120-0022	2	Pivot-Brake
14	32151-68	2	Ring-Retaining
15	1-513140	4	Bearing-Control
16	3290-307	6	Pin-Cotter
17	1-633268	1	Grip-Lever
18	1-808285	2	Pin-Clevis
19	1-633131	2	Yoke-Linkage, Brake
20	120-0023	2	Rod-Brake

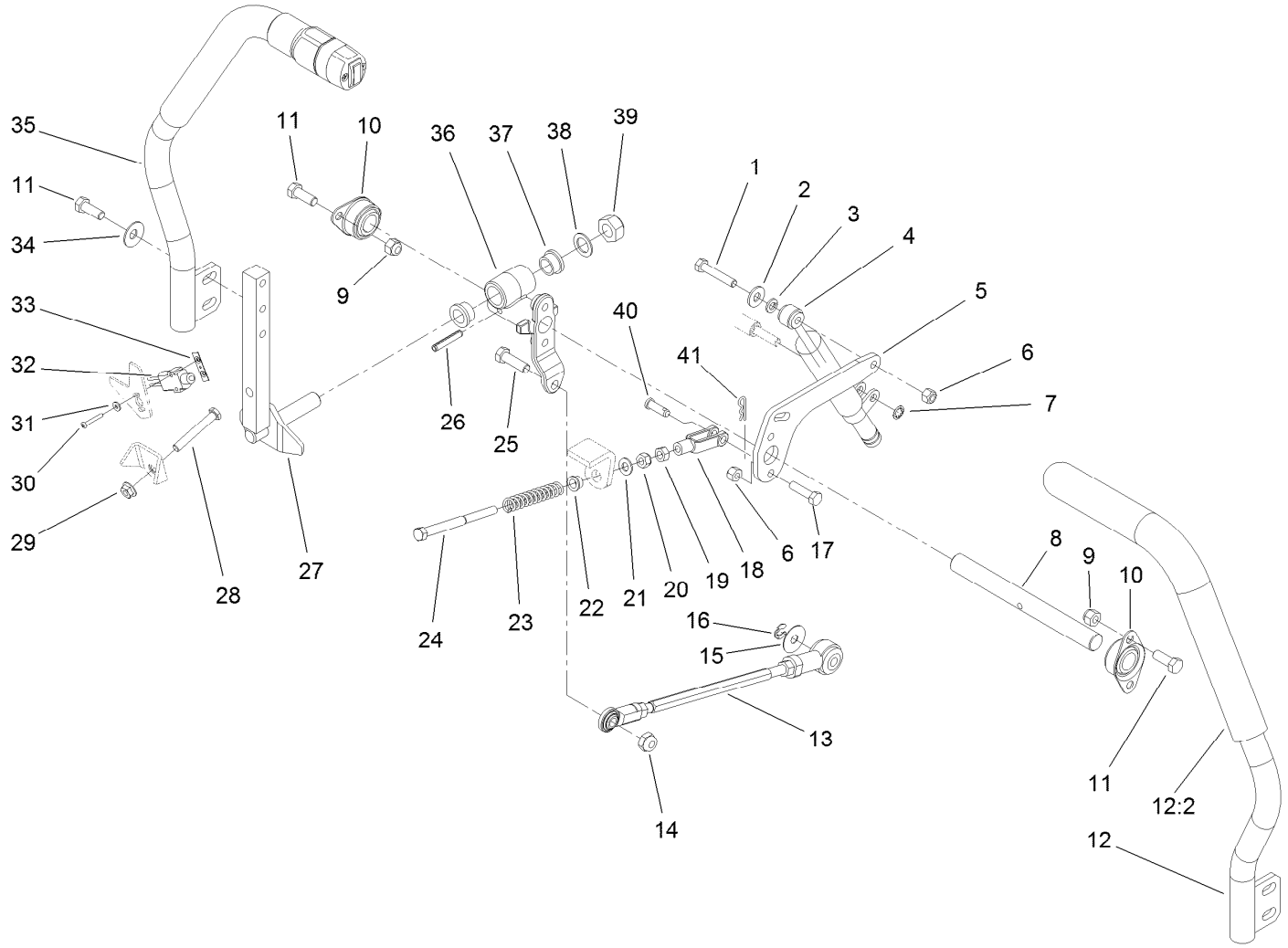

Traction Control Assembly

Ref.	Part Number	Qty.	Description
1	322-9	2	Screw-HH
2	3256-3	2	Washer-Flat
3	3253-4	4	Washer-Lock
4	105-7280	2	Damper
5	108-9829-03	2	Lever-Damper
6	3296-29	6	Nut-Lock, NI
7	32151-72	2	Ring-Retaining
8	108-9830	2	Shaft-Pivot
9	3296-39	8	Nut-Lock, NI
10	1-633102	4	Bearing-Flange, Side
11	323-6	12	Screw-HH
12	125-2688	1	LH Lever ASM
12:2	125-2704	1	Grip-Foam
13	112-5099	2	Link ASM
14	3296-44	2	Nut-Lock, NI
15	105-6814	2	Washer-Plain
16	32151-47	2	Ring-Retaining
17	322-6	4	Screw-HH
18	1-303105	2	Yoke-Adjustable
19	3219-2	2	Nut-Hex
20	3296-4	2	Nut-Lock

Ref.	Part Number	Qty.	Description
21	3256-23	2	Washer-Flat
22	1-603735	2	Bushing-Flanged
23	1-603807	2	Spring-Return, Neutral
24	1-603737	2	Bolt-Return, Neutral
25	323-7	2	Screw-HH
26	32121-15	2	Pin-Roll
27	108-9833-03	2	Lever
28	9114524	2	Bolt-TAP, HH
29	32128-26	2	Nut-Flange
30	3250-35	4	Screw-PPH
31	3256-53	4	Washer-Flat
32	99-3410	2	Switch
33	108-9824	2	Nut-Switch
34	3290-461	4	Washer-Spring
35	125-2687	1	RH Lever ASM
36	108-9831	2	Hub-Control
37	105-3455	4	Bushing
38	105-3481	4	Washer-Thrust
39	32152-6	2	Nut-Lock, Cone
40	283-1	2	Pin-Clevis
41	3290-307	2	Pin-Cotter

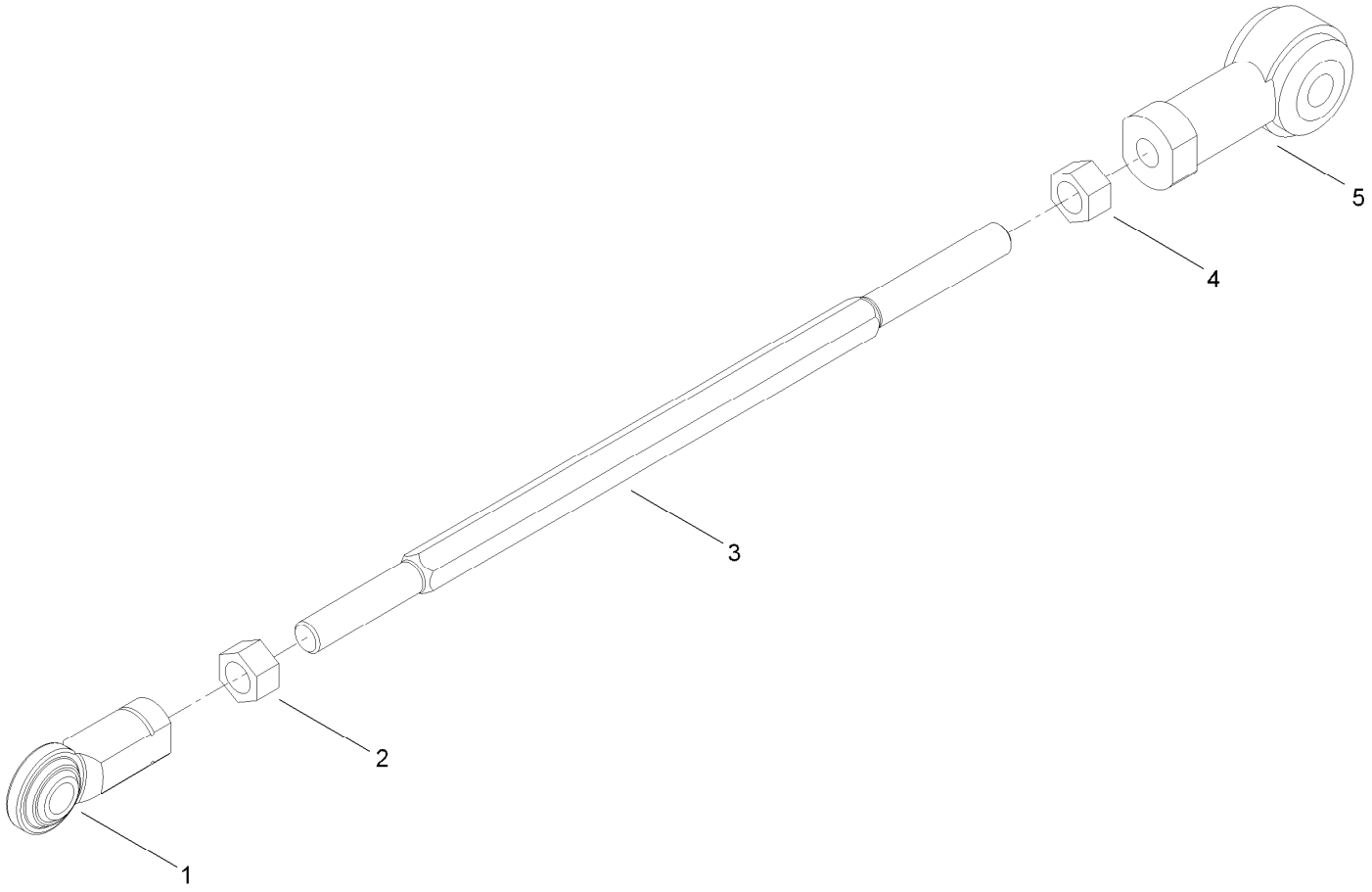

Link Assembly No. 112-5099

Ref.	*Part Number*	*Qty.*	*Description*
1	103-1167	1	Joint-Ball End, LH
2	3219-20	1	Nut-Hex, LH
3	105-7239	1	Rod-Threaded
4	3219-3	1	Nut-Hex
5	105-7199	1	Rod End-Isolated

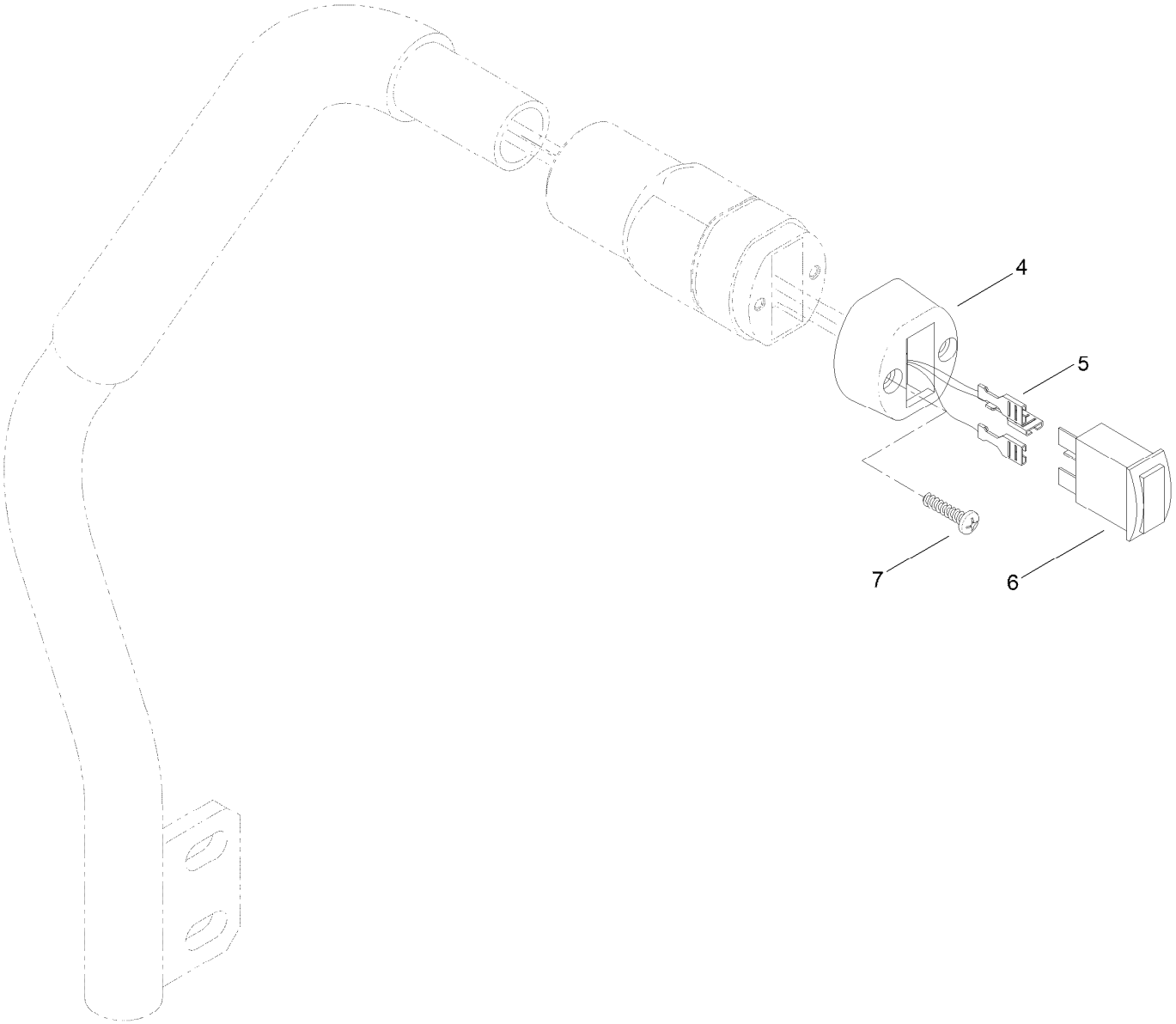

RH Lever Assembly No. 125-2687

Ref.	*Part Number*	*Qty.*	*Description*
4	121-3399	1	Cap-Switch
5	119-4382	1	Harness-Control Handle
6	125-2702	1	Switch, Spst (On)-Off-On
7	94-4496	2	Screw-PPH

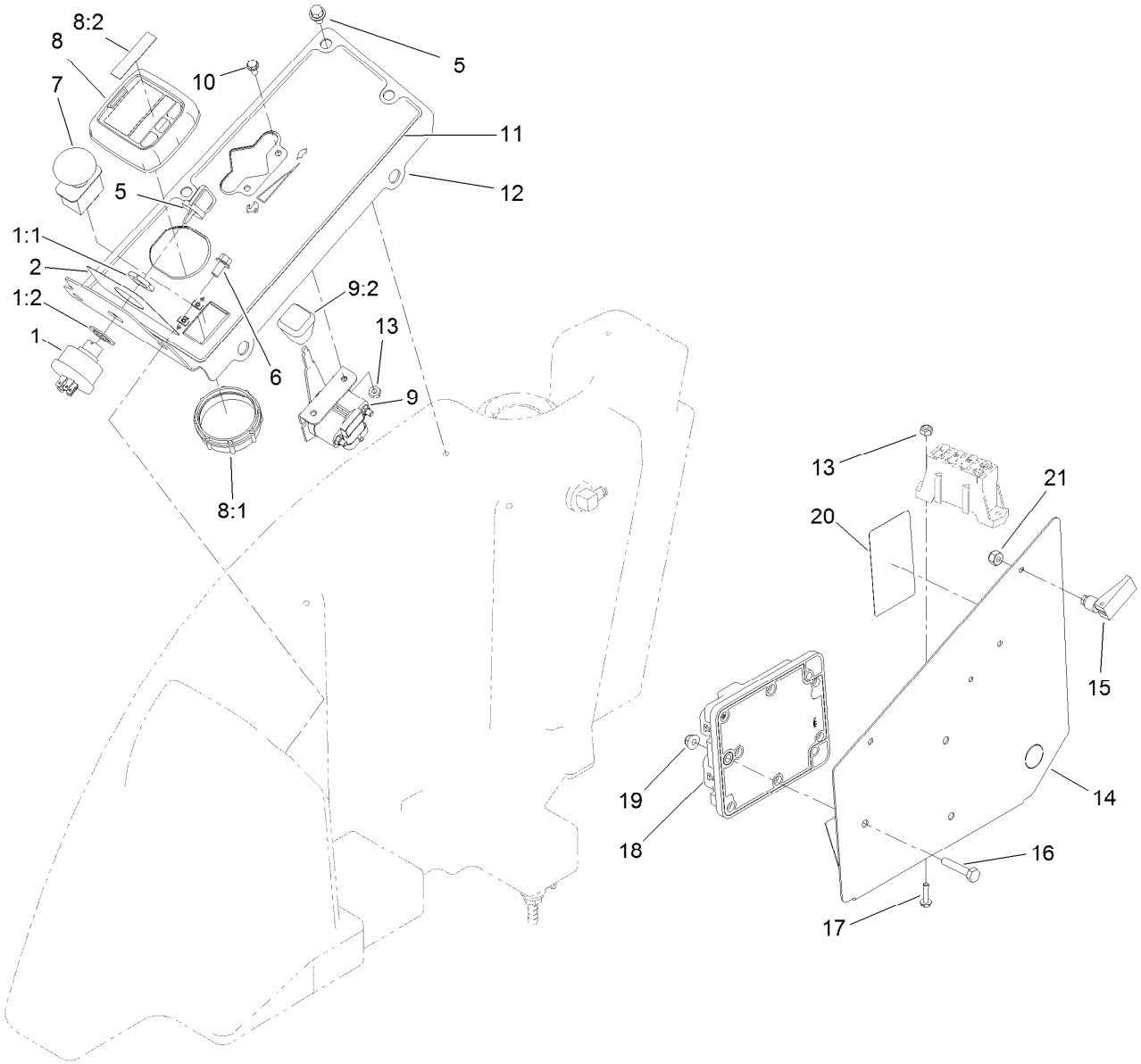

Control Panel Assembly

Ref.	Part Number	Qty.	Description
1	104-2541	1	Switch ASM
1:1	218-461	1	Nut-HH
1:2	3254-5	1	Washer-Tooth, Internal
2	110-8254	1	Decal-Start, Control Panel
5	63-8360	2	Key-Ignition
6	3234-13	5	Screw-HHF
7	93-9999	1	Switch-PTO
8	120-6310	1	Lcd Display ASM
8:1	120-4630	1	Nut-Display
8:2	120-6311	1	Decal-Display
9	122-0111	1	Throttle-Electronic
9:2	66-0120	1	Knob

Ref.	Part Number	Qty.	Description
10	3290-321	2	Screw-HWH
11	121-3363	1	Decal-Panel, Control
12	121-3362-03	1	Panel-Control
13	3296-2	4	Nut-Lock, NI
14	110-8257-03	1	Cover-Panel, Control
15	74-5950	2	Latch-Swell
16	321-13	3	Screw-HH
17	32105-13	2	Screw-HWH
18	106-9277	1	Module-Control, Standard
19	104-7201	3	Nut-Flange, NI
20	110-9796	1	Decal-Block, Fuse
21	1-804254	2	Nut-Lock, HH

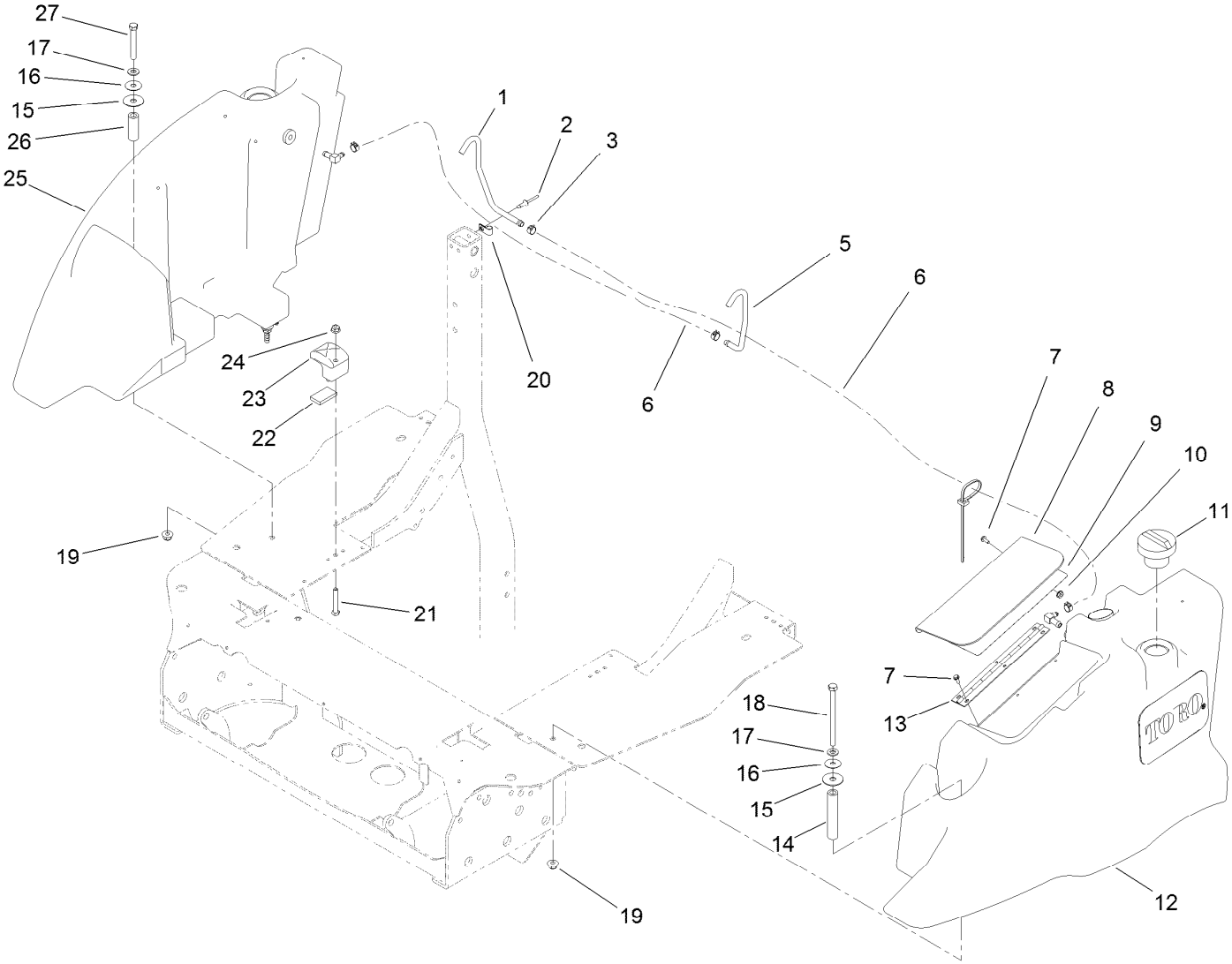

Left-Hand and Right-Hand Fuel Tank Assembly

Ref.	Part Number	Qty.	Description
1	110-8260	1	Tube-Vent, RH
2	3290-412	2	Rivet
3	92-2379	4	Clamp-Hose
5	110-8261	1	Tube-Vent, LH
6	110-6186	2	Hose-Fuel
7	112-6349	6	Screw-HWH
8	110-5540-03	1	Cover-Toolbox
9	125-2747	1	Decal-Instruction, Service
10	32149-8	3	Nut-Keps
11	125-9170	2	Cap-Fuel, Diesel (Ultra Low Sulfur)
12	131-5509	1	LH Fuel Tank ASM
13	108-2024	1	Hinge
14	110-5539	1	Spacer
15	95-1905	2	Washer-Rubber
16	105-6814	2	Washer-Plain
17	3256-24	2	Washer-Flat
18	323-39	1	Screw-HH
19	104-8301	2	Nut-Flange, NI
20	2412-89	2	Clamp-R
21	322-10	4	Screw-HH
22	112-9561	4	Pad-Foam
23	107-4543	4	Clamp
24	104-8300	4	Nut-Flange, NI
25	110-8236	1	RH Fuel Tank ASM
26	92-1239	1	Spacer-Support
27	323-13	1	Screw-HH

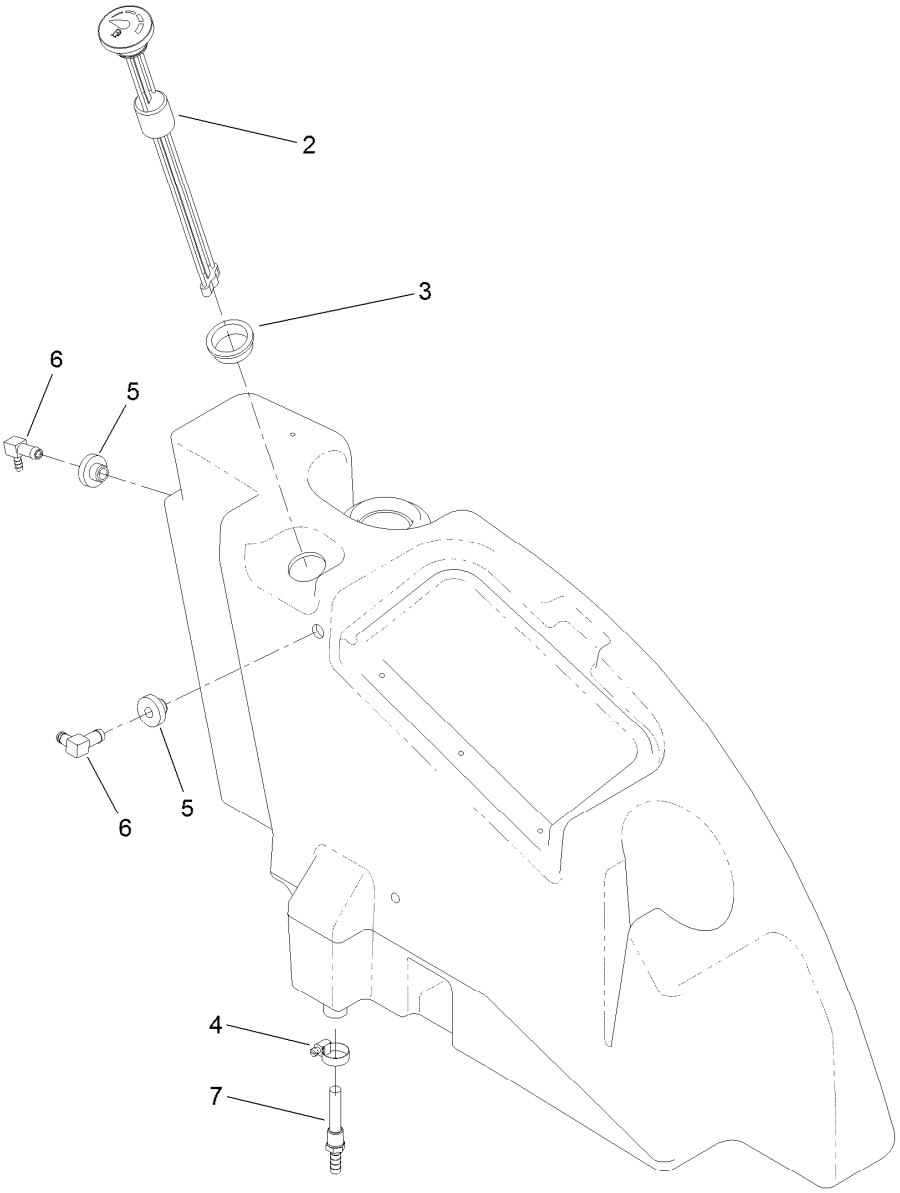

LH Fuel Tank Assembly No. 131-5509

Ref.	*Part Number*	*Qty.*	*Description*
2	110-8262	1	Gauge-Fuel
3	95-8972	1	Grommet
4	2412-36	1	Clamp-Hose
5	46-6560	2	Bushing
6	1-643259	2	Fitting-Elbow
7	112-6374	1	Fitting-Strainer

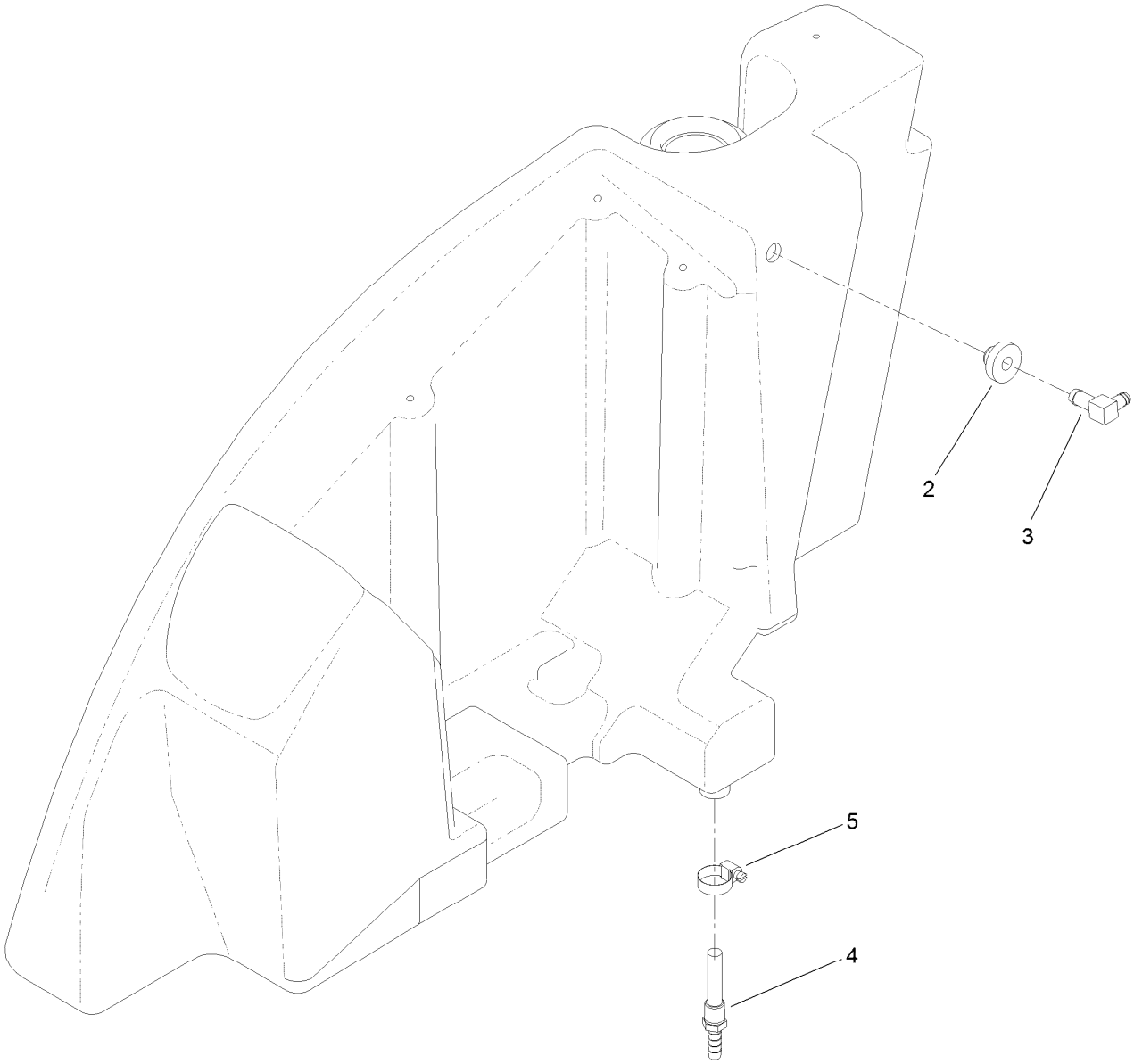

RH Fuel Tank Assembly No. 110-8236

Ref.	*Part Number*	*Qty.*	*Description*
2	46-6560	1	Bushing
3	1-643259	1	Fitting-Elbow
4	112-6374	1	Fitting-Strainer
5	2412-36	1	Clamp-Hose

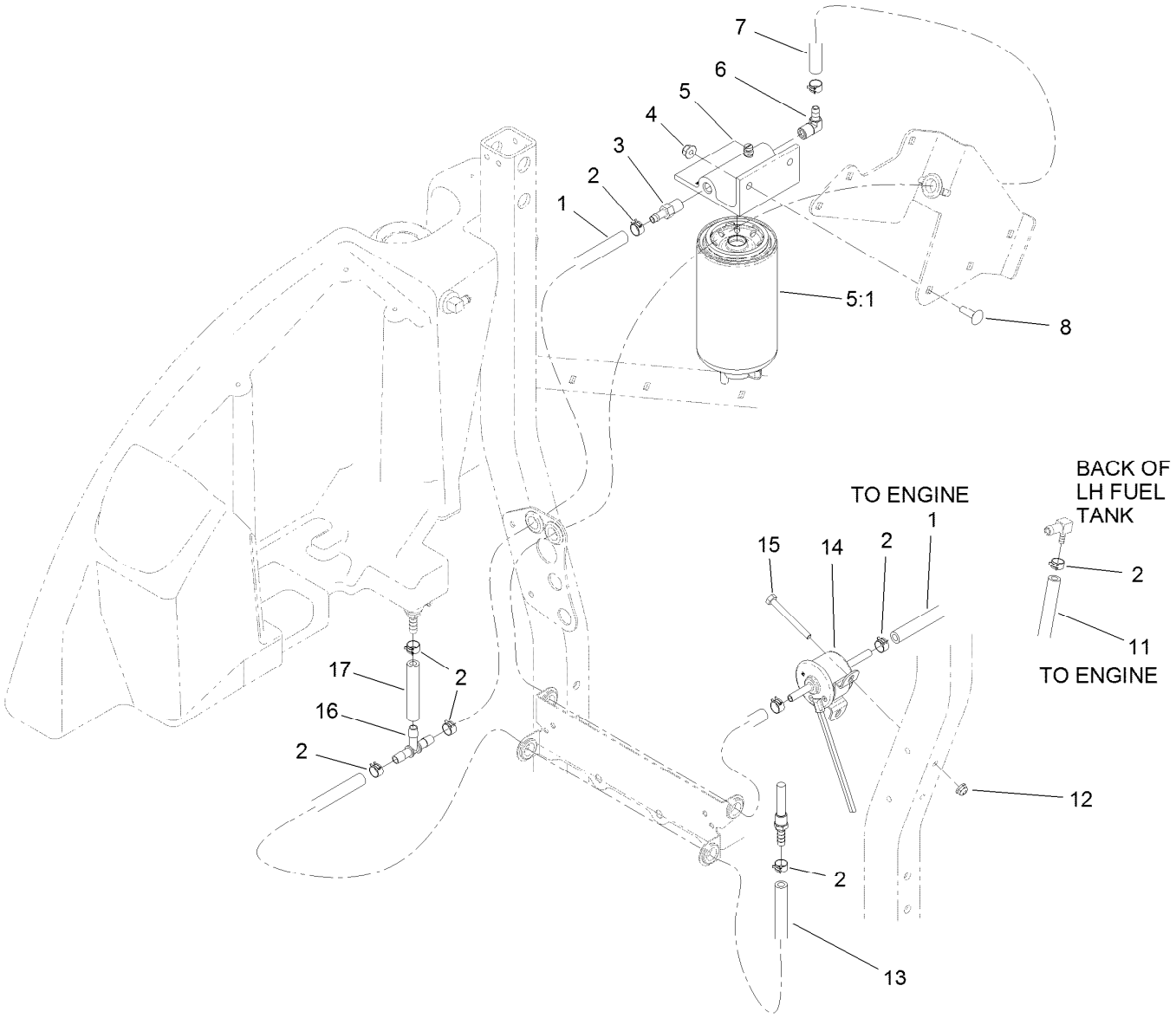

Fuel System Assembly

Ref.	Part Number	Qty.	Description
1	110-4112	2	Hose-Fuel
2	92-2379	12	Clamp-Hose
3	353-783	1	Fitting-Straight
4	104-8300	2	Nut-Flange, NI
5	125-2914	1	Separator Filter ASM
5:1	125-2915	1	Filter-Spin On
6	353-781	1	Fitting-Elbow
7	110-4100	1	Hose-Fuel

Ref.	Part Number	Qty.	Description
8	3230-22	2	Screw-CARR
11	110-6187	1	Hose-Fuel
12	104-7201	2	Nut-Flange, NI
13	110-6186	1	Hose-Fuel
14	121-5613	1	Pump-Fuel, Electric
15	321-15	2	Screw-HH
16	354-107	1	Fitting-HYD, Tee
17	127-6453	1	Hose-Fuel

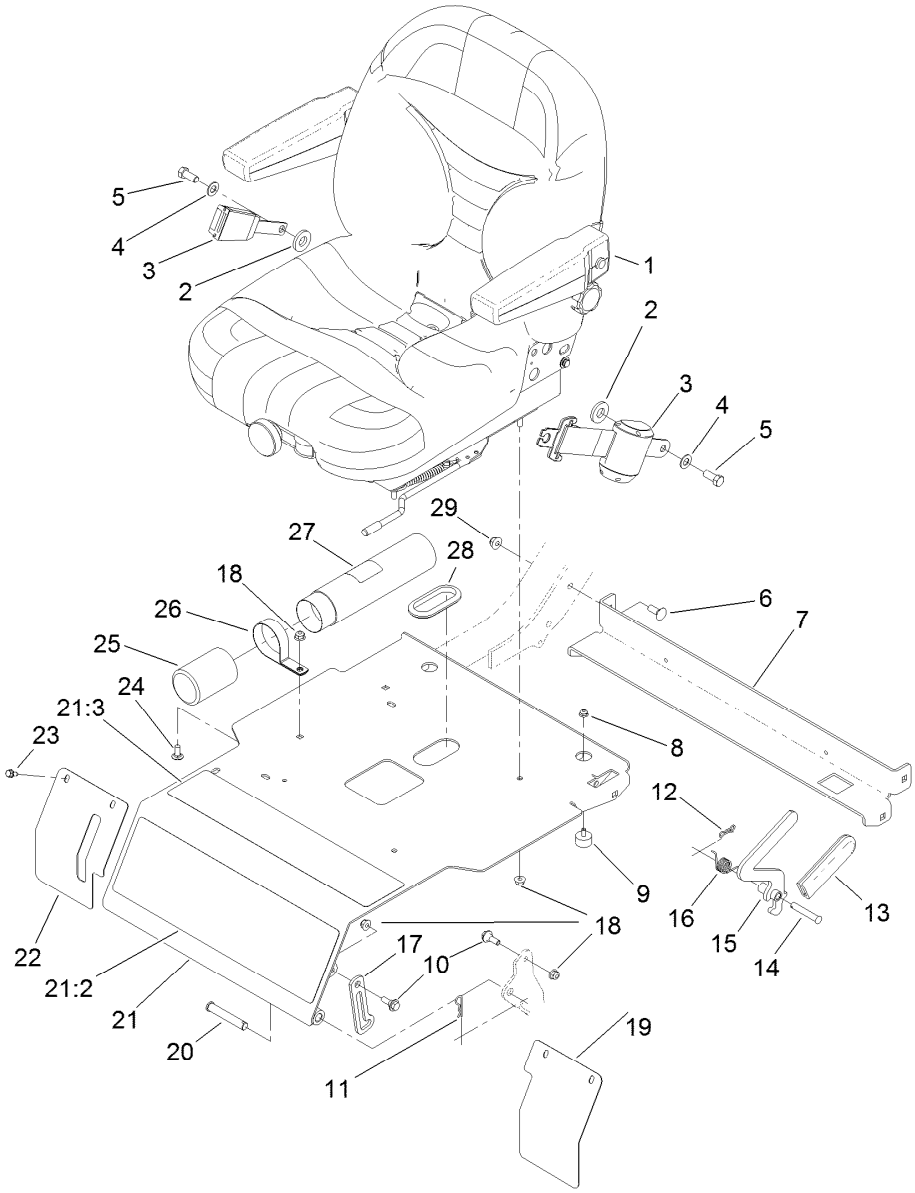

Seat and Seat Plate Assembly

Ref.	Part Number	Qty.	Description
1	107-2286	1	Seat
2	99-7667	2	Washer-Flat
3	110-0413	1	Seatbelt-Retractable
4	3256-25	2	Washer-Flat
5	3212-4	2	Screw-HH
6	3231-2	4	Bolt-CARR
7	120-0095-03	1	Support-Seat
8	104-7201	2	Nut-Flange, NI
9	240-14	2	Bumper-Rubber
10	116-2670	2	Screw-Shoulder
11	3290-467	2	Pin-Hair
12	119-1415	1	Pin-Cotter, Locking
13	1-633268	1	Grip-Lever
14	86-2130	1	Pin-Clevis
15	121-3390-03	1	Lever-Seat
16	121-3386	1	Spring-Torsion

Ref.	Part Number	Qty.	Description
17	130-8754	1	Prop-Seat
18	104-8300	8	Nut-Flange, NI
19	130-8767-03	1	Cover-LH
20	283-55	2	Pin-Clevis
21	130-8749	1	Seat Plate ASM
21:2	120-9195	1	Decal-Safety
21:3	120-9196	1	Decal-Console, Top (Ce)
22	130-8768-03	1	Cover-RH
23	32144-10	4	Screw-HWH
24	3230-23	2	Screw-CARR
25	104-7048	1	Cap-Housing
26	2412-133	2	R-Clamp
27	104-7050	1	Tube-Manual
28	237-164	1	Grommet
29	104-8301	4	Nut-Flange, NI

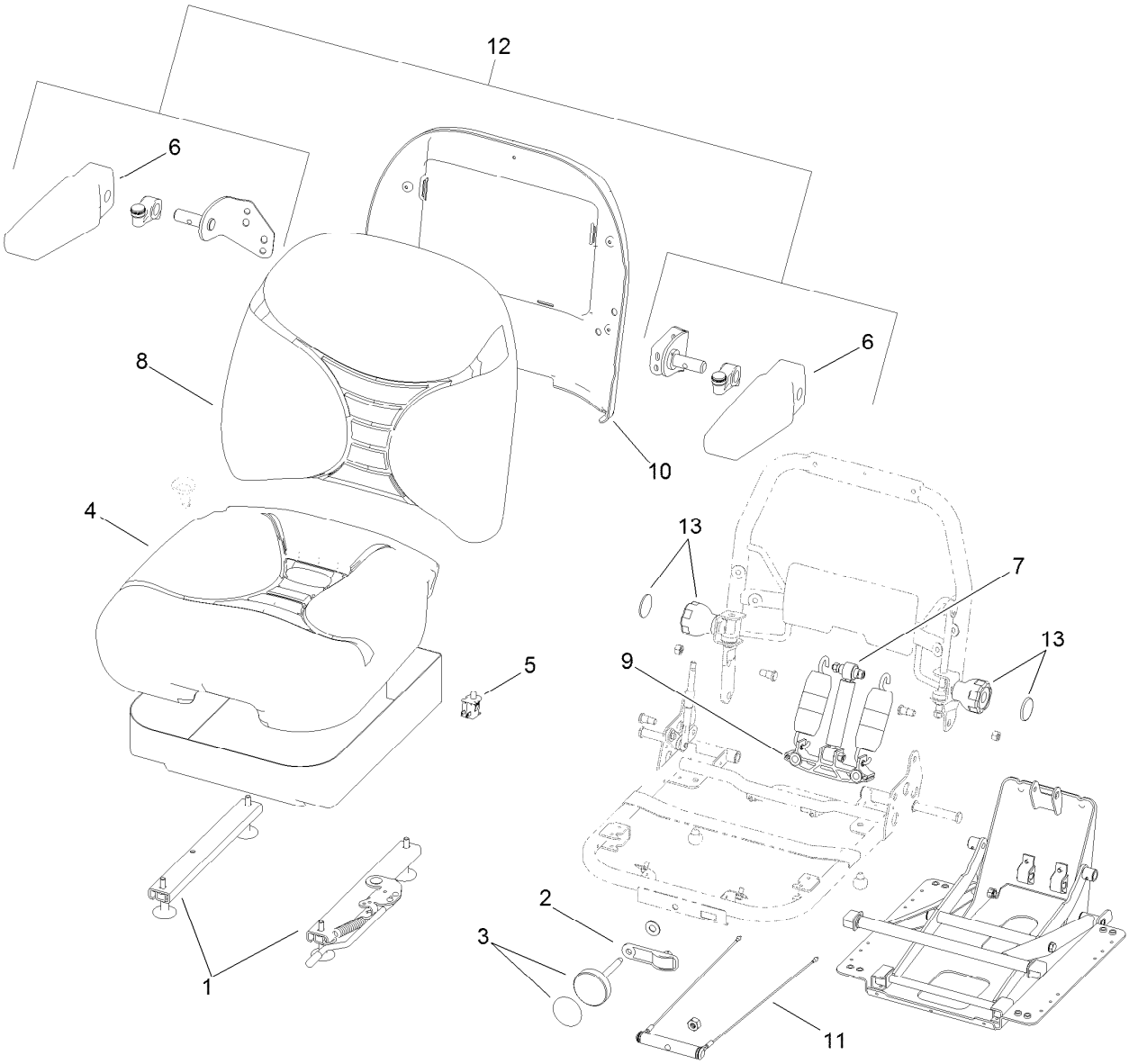

Seat Assembly No. 107-2286

Ref.	Part Number	Qty.	Description
1	107-1880	1	Seat Track Kit
2	107-1885	1	Weight Indicator Kit
3	121-9431	1	Knob Kit
4	107-1883	1	Bottom Cushion Kit
5	82-2190	1	Switch-Bail
6	107-1887	2	Pad-Armrest
7	107-1884	1	Shock Absorber Kit
8	107-1882	1	Back Cushion Kit
9	109-3343	1	Spring And Saddle Kit
10	109-3344	1	Back Panel Kit
11	109-3345	1	Weight Adjust Kit
12	121-9415	1	Armrest Kit
13	121-9432	2	Adjust Knob Kit

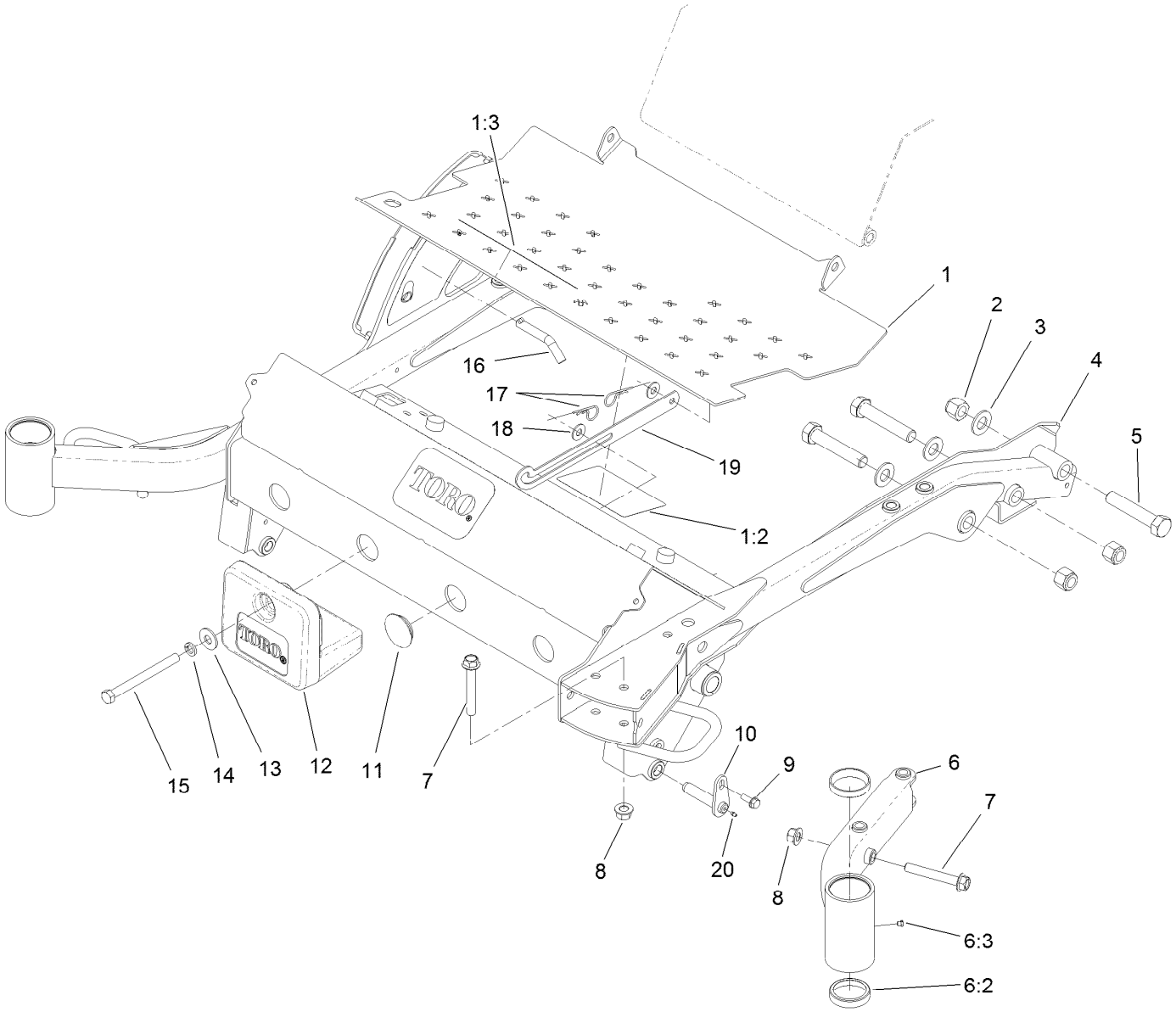

Carrier Frame and Weight Assembly

Ref.	Part Number	Qty.	Description
1	120-9165	1	Floorplate ASM
1:2	112-1461	1	Decal-Routing, Belt
1:3	107-1866	1	Decal-Danger, Slope
2	3296-51	5	Nut-Lock, NI
3	92-5836	5	Washer
4	121-3356	1	Carrier Frame ASM
5	328-7	5	Screw-HH
6	121-3340	1	Castor Arm ASM
6:2	254-107	2	Cup-Bearing, Tapered
6:3	1-811010	1	Plug
7	114-8419	3	Screw-HHF
8	99-5107	3	Nut-Lock

Ref.	Part Number	Qty.	Description
9	32144-41	2	Screw-Taptite
10	112-1602	2	Pin-Retainer
11	121-3397	2	Plug-Grommet
12	125-2655-03	2	Weight
13	3256-6	2	Washer-Flat
14	3253-7	2	Washer-Lock
15	325-22	2	Screw-HH
16	112-9544	1	Pin-HOC
17	3290-255	2	Pin-Cotter, Hair
18	3256-4	2	Washer-Flat
19	121-3394-03	1	Prop-Floor
20	302-5	2	Fitting-Grease

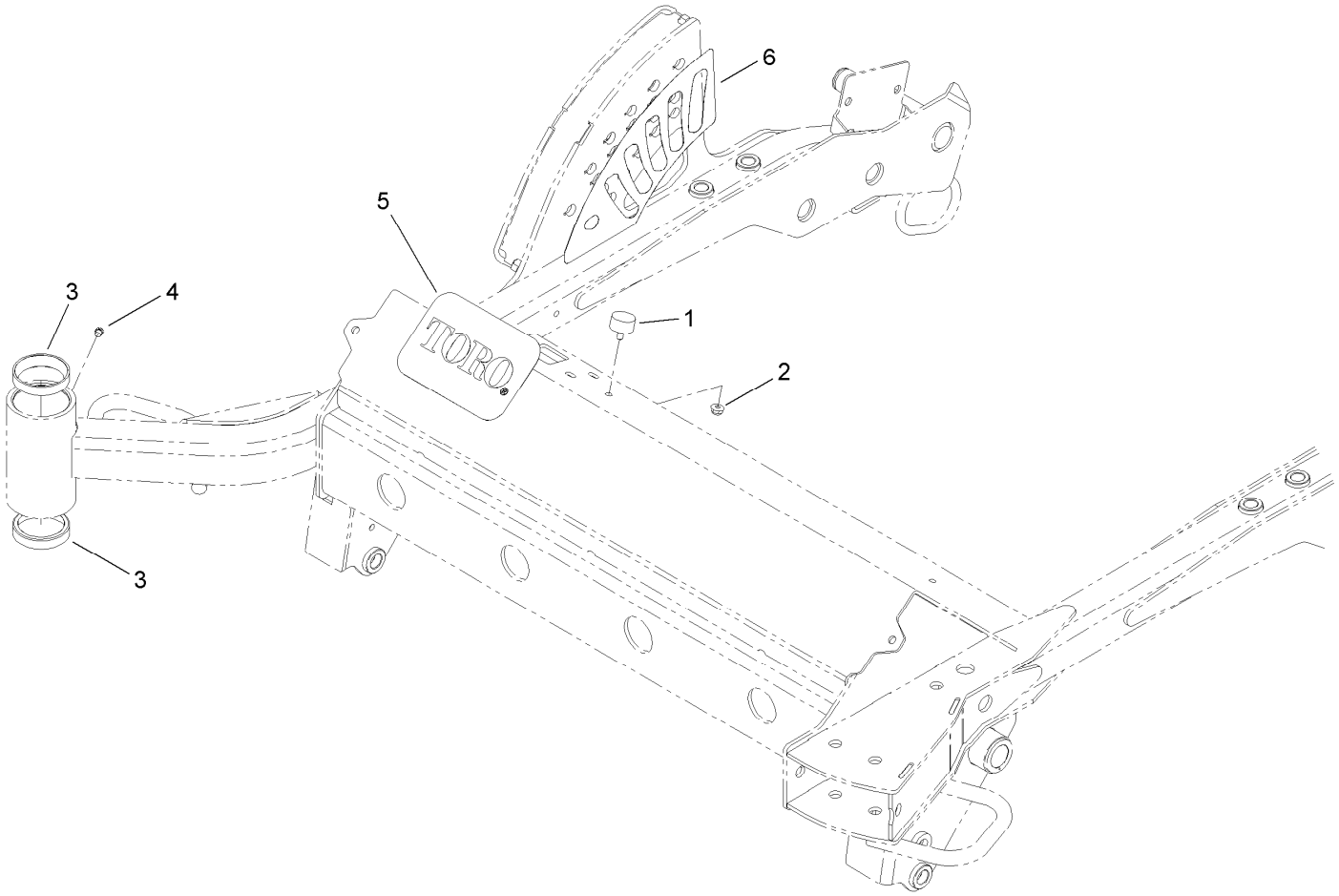

Carrier Frame Assembly No. 121-3356

Ref.	*Part Number*	*Qty.*	*Description*
1	240-14	4	Bumper-Rubber
2	104-7201	4	Nut-Flange, NI
3	254-107	2	Cup-Bearing, Tapered
4	1-811010	1	Plug
5	99-4693	1	Decal
6	127-6519	1	Decal-HOC

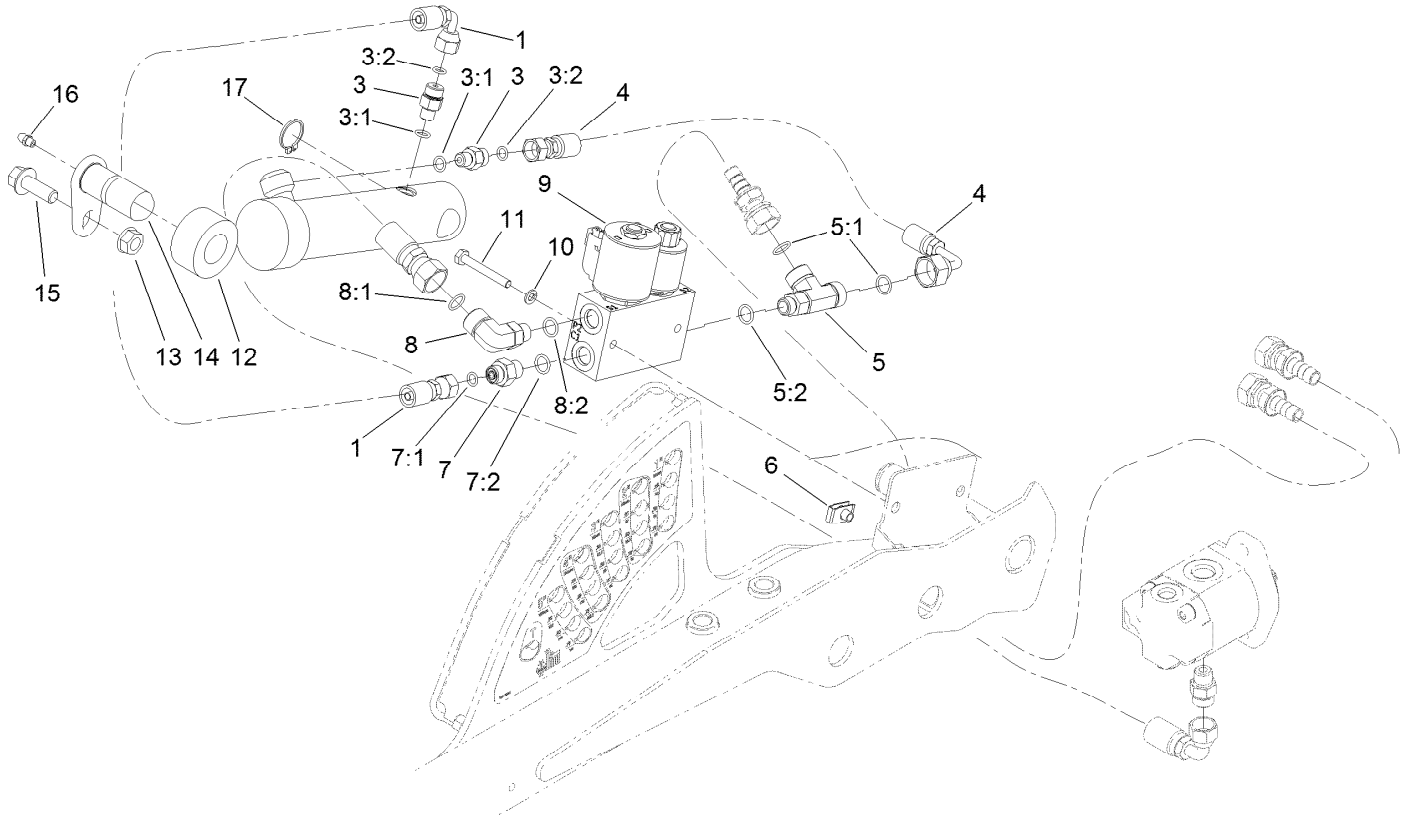

Lift Valve and Cylinder Assembly

Ref.	Part Number	Qty.	Description
1	127-4908	1	Hose-HYD
3	340-92	2	Fitting-HYD, Straight
3:1	237-78	1	O-Ring
3:2	237-21	1	O-Ring
4	127-4909	1	Hose-HYD
5	110-0064	1	Fitting-Tee
5:1	237-30	2	O-Ring
5:2	237-42	1	O-Ring
6	107069	2	Clip
7	340-1	1	Fitting-HYD, Straight
7:1	237-21	1	O-Ring
7:2	237-42	1	O-Ring

Ref.	Part Number	Qty.	Description
8	340-99	1	Fitting-HYD, 90 DEG
8:1	237-30	1	O-Ring
8:2	237-42	1	O-Ring
9	131-1934	1	Deck Lift Valve ASM
10	3253-3	2	Washer-Lock
11	321-11	2	Screw-HH
12	110-9834	1	HYD Cylinder ASM
13	32128-37	1	Nut-HF
14	125-1910	1	Pin-Pivot
15	3234-15	1	Screw-HHF
16	302-5	1	Fitting-Grease
17	32151-36	1	Ring-Retaining

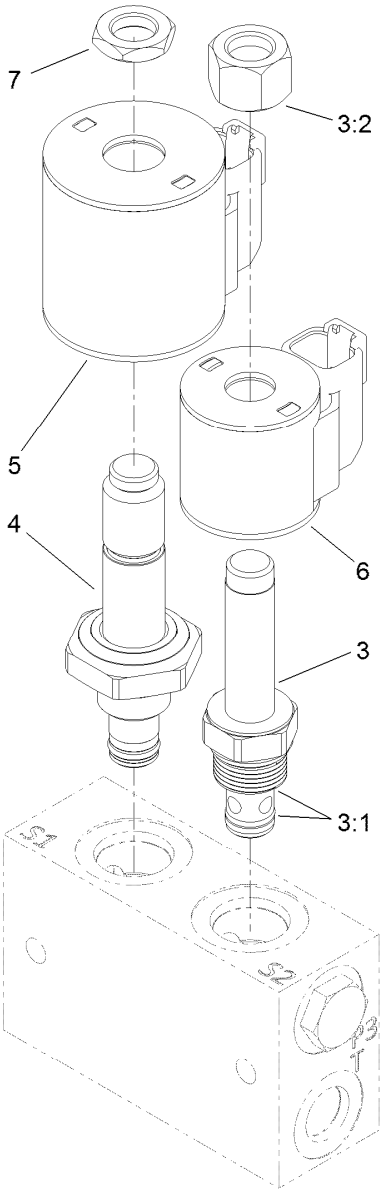

Valve Assembly No. 131-1934

Ref.	Part Number	Qty.	Description
3	107-7517	1	Valve-Solenoid
3:1	105-9156	1	Seal Kit
3:2	107-7812	1	Nut-Solenoid
4	131-1935	1	Valve-Solenoid
5	115-3021	1	Coil-12V
6	119-8036	1	Coil
7	110-2634	1	Nut-Coil

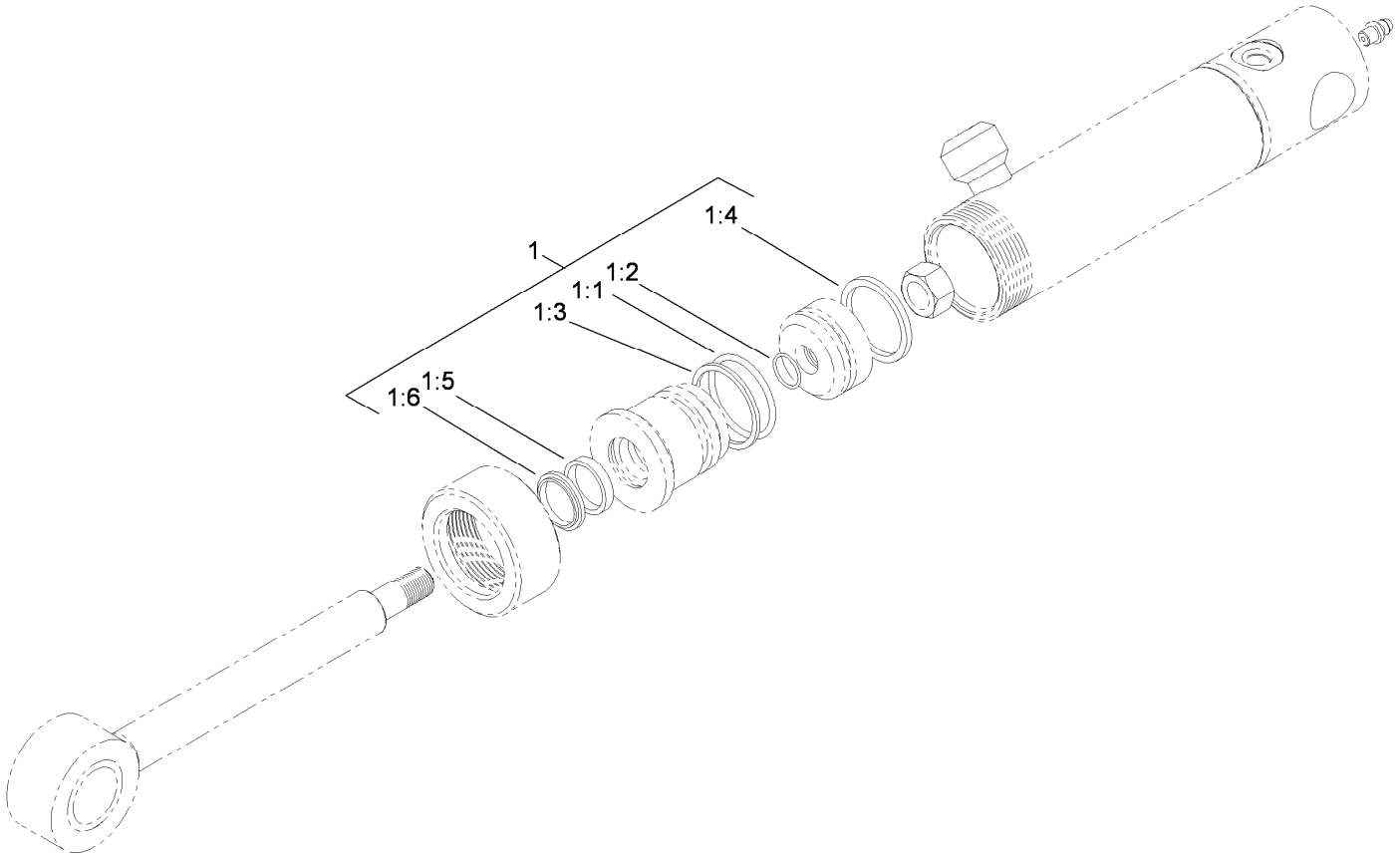

Hydraulic Cylinder Assembly No. 110-9834

Ref.	*Part Number*	*Qty.*	*Description*
1	112-6353	1	Seal Kit
1:1		1	O-Ring ●
1:2		1	O-Ring ●
1:3		1	Backup ●
1:4		1	Seal-Bp ●
1:5		1	Seal-Rod ●
1:6		1	Seal-Dust ●

● Not serviced separately

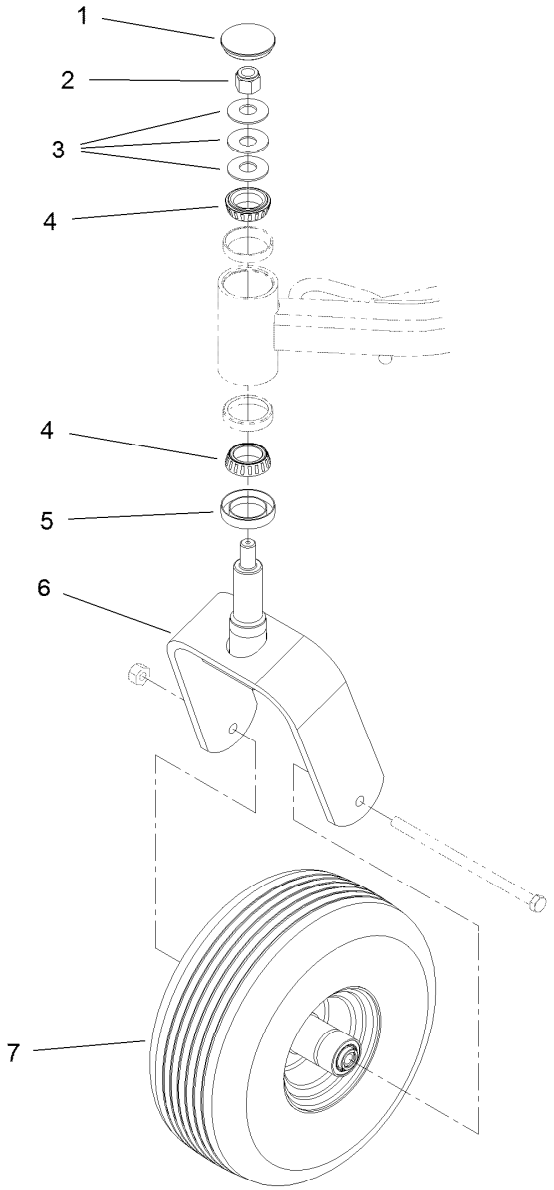

Caster Wheel Assembly

Ref.	Part Number	Qty.	Description
1	108-9950	2	Cap-Grease
2	3296-51	2	Nut-Lock, NI
3	108-9957	6	Washer-Belleville
4	254-106	4	Cone-Bearing, Tapered
5	69-2980	2	Seal
6	108-9946-03	2	Fork-Caster
7	108-9954	2	Caster Wheel ASM

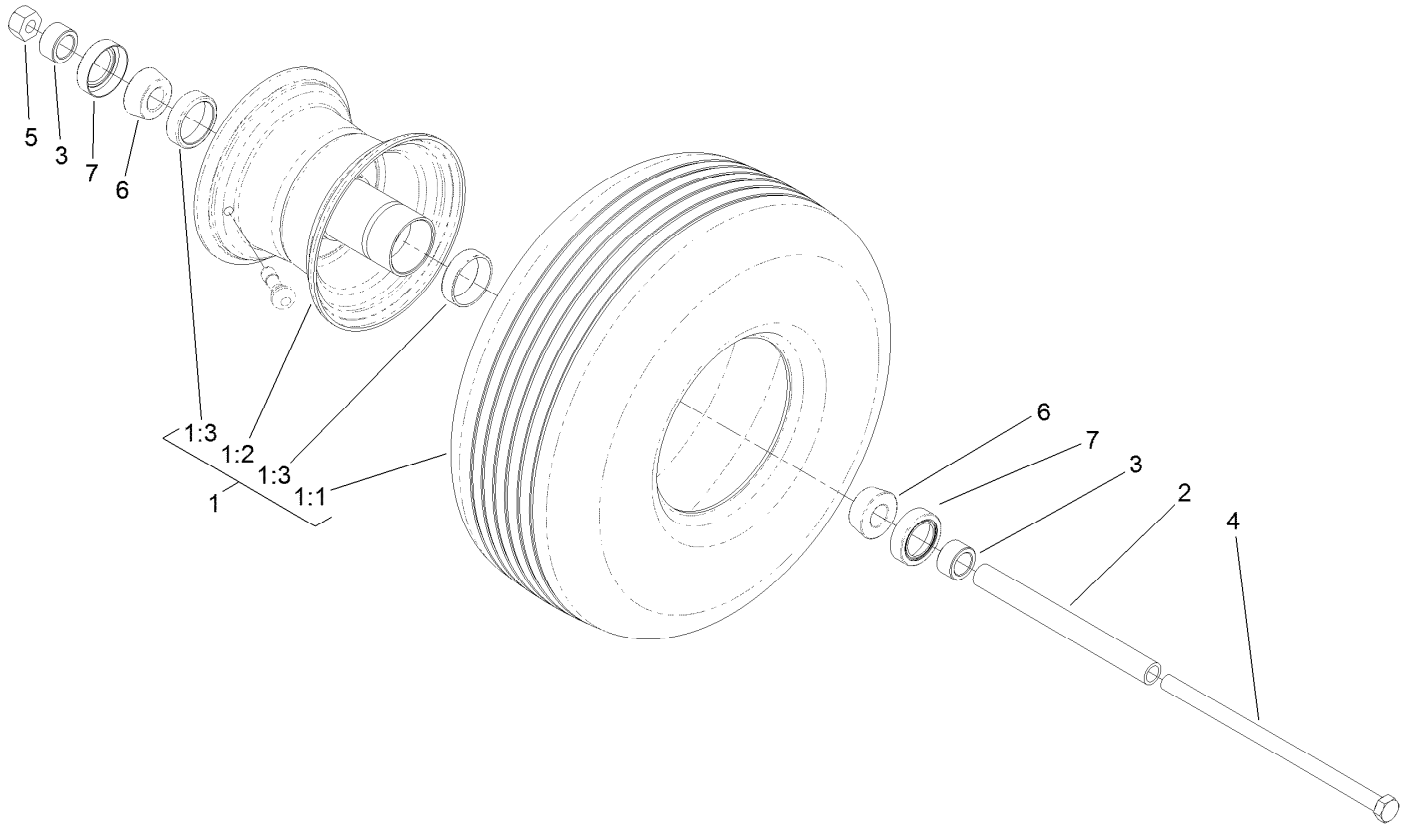

Caster Wheel Assembly No. 108-9954

Ref.	*Part Number*	*Qty.*	*Description*
1	108-9956	1	Tire And Wheel ASM
1:1	108-9955	1	Tire
1:2	1-633987	1	Wheel
1:3	1-633584	2	Bearing-Cup
2	1-633959	1	Spacer-Caster, Front
3	1-633581	2	Spacer-Bearing
4	325-39	1	Screw-HH
5	3296-25	1	Nut-Lock, NI
6	1-633585	2	Bearing-Cone, Taper
7	1-633580	2	Seal-Bearing

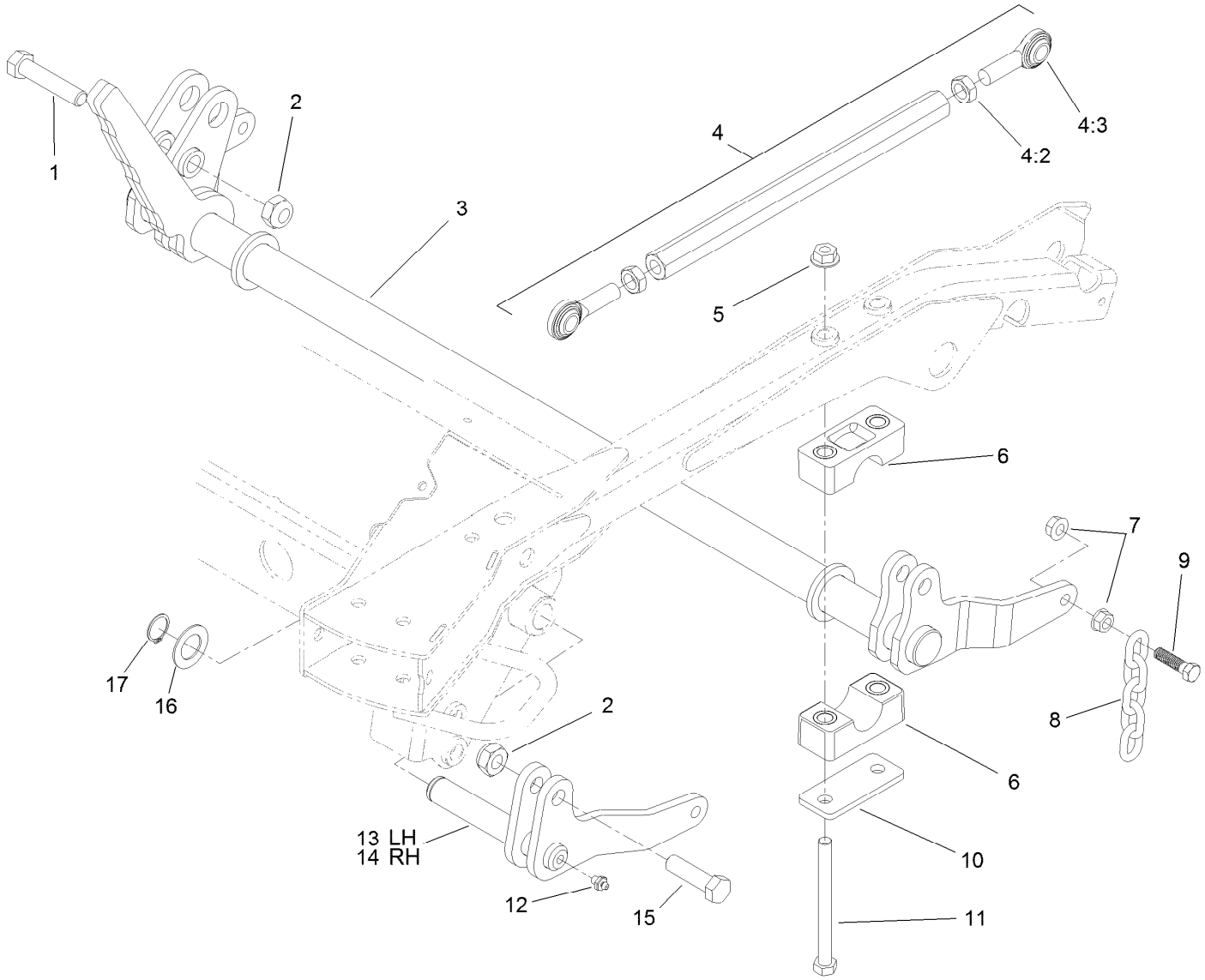

Deck Lift Assembly

Ref.	Part Number	Qty.	Description
1	104-5895	1	Screw-HH
2	3296-61	4	Nut-Lock
3	117-9220-03	1	Shaft-Lift
4	114-4059	2	Link ASM
4:2	3220-6	2	Nut-Jam
4:3	1-633029	2	Balljoint-Spherical
5	32128-49	4	Nut-HHF
6	115-0491	4	Cap-Bearing
7	32128-37	8	Nut-HF
8	1-633447	4	Chain-Lift, Deck

Ref.	Part Number	Qty.	Description
9	103-1898	4	Screw-HH
10	117-2903	2	Plate-Bearing
11	325-22	4	Screw-HH
12	302-2	2	Fitting-Grease
13	110-9818-03	1	Lift-LH
14	110-9820-03	1	Lift-RH
15	327-22	3	Screw-HH
16	69-9010	2	Washer
17	32151-29	2	Ring-Retaining

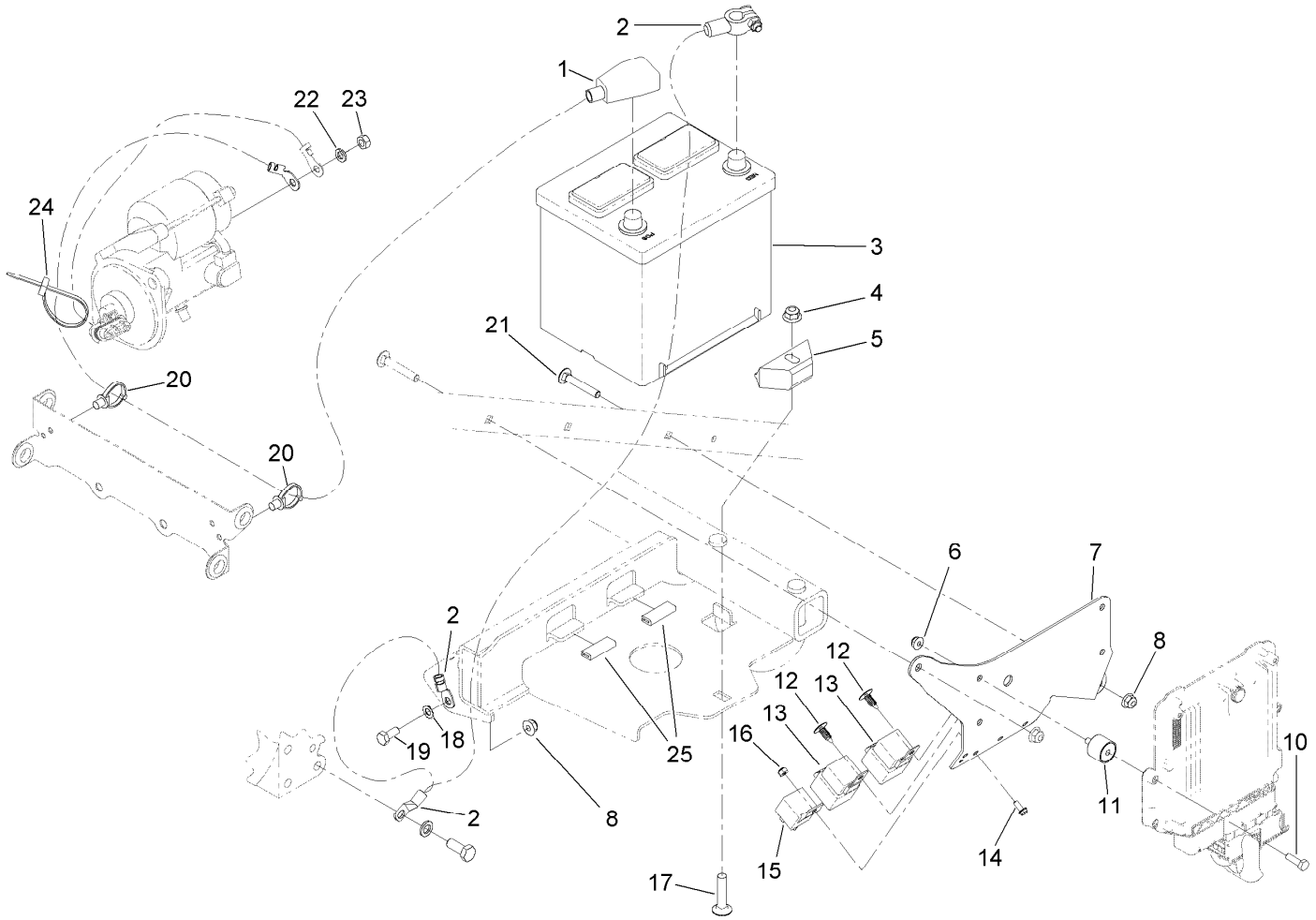

Battery and Relay Assembly

Ref.	Part Number	Qty.	Description
1	108-6327	1	Cable-Battery, Positive
2	105-0040	1	Cable-Battery, Negative
3	106-5187	1	Battery-Dry
4	104-8301	1	Nut-Flange, NI
5	66-2490	1	Retainer-Battery
6	104-7201	4	Nut-Flange, NI
7	120-9148-03	1	Plate-Controller
8	104-8300	2	Nut-Flange, NI
10	321-5	4	Screw-HH
11	125-2674	4	Mount-Cylindrical
12	117-2382	2	Plug-Plastic
13	99-7430	2	Relay

Ref.	Part Number	Qty.	Description
14	3290-321	1	Screw-HWH
15	99-7435	1	Relay-Power
16	3296-2	1	Nut-Lock, NI
17	3231-5	1	Screw-CARR
18	3255-8	1	Washer-Lock
19	322-3	1	Screw-HH
20	32180-030	2	Clip-Tie
21	3230-6	1	Screw-CARR
22	3253-4	1	Washer-Lock
23	33014-00	1	Nut-Hex
24	3290-378	1	Tie-Cable
25	131-5508	2	Trim-Battery Hold Down

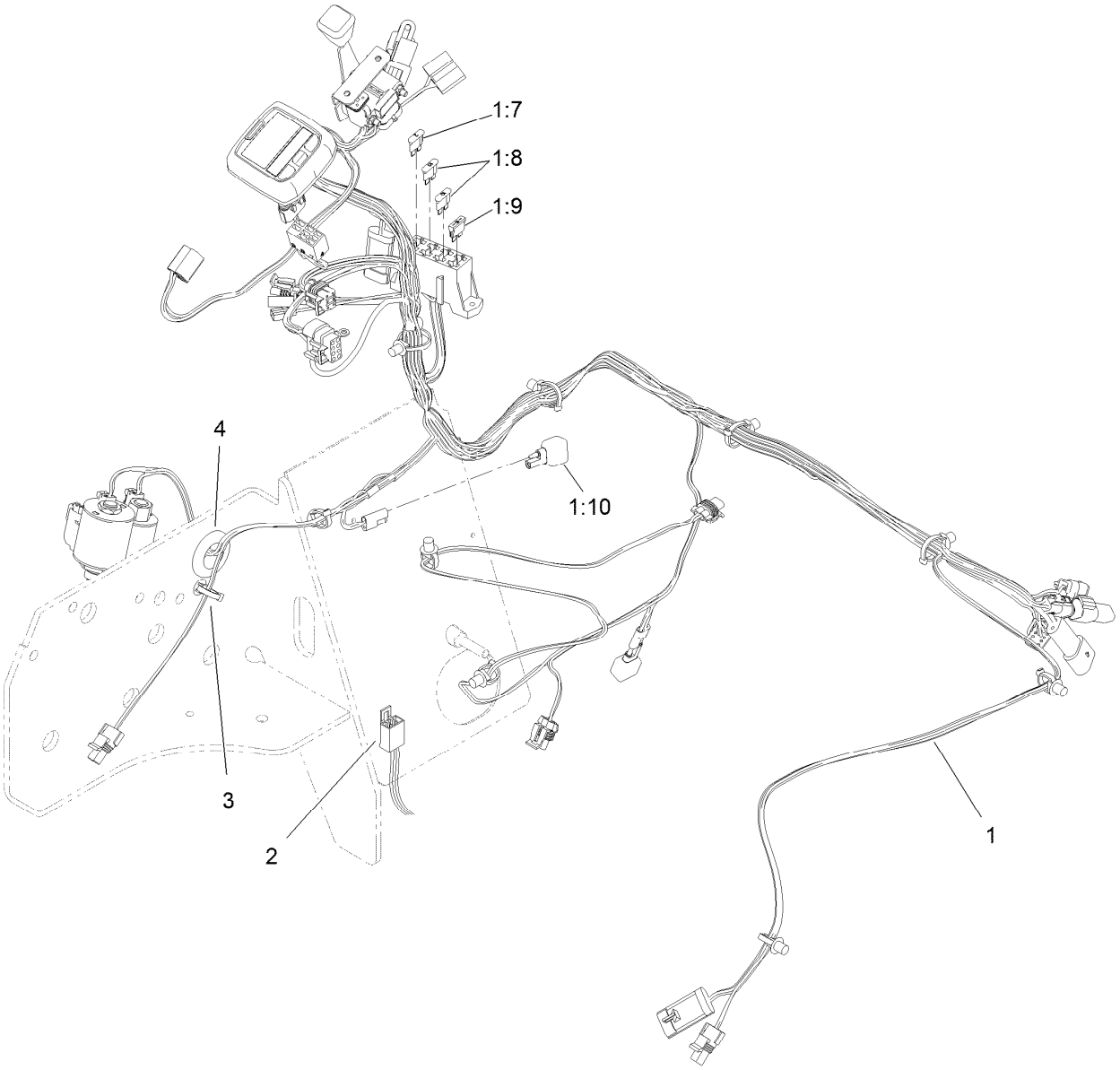

Main Wire Harness Assembly

Ref.	*Part Number*	*Qty.*	*Description*
1	119-4370	1	Harness-Wire, Main
1:7	94-6710	1	Fuse-2 Amp
1:8	218-578	2	Fuse-Blade, 10 Amp
1:9	109355	1	Fuse-Blade, 15 Amp
1:10	100-4918	2	Diode-Over Molded
2	108-8657	1	Harness-Wire, Seat
3	3290-378	3	Tie-Cable
4	237-165	1	Grommet

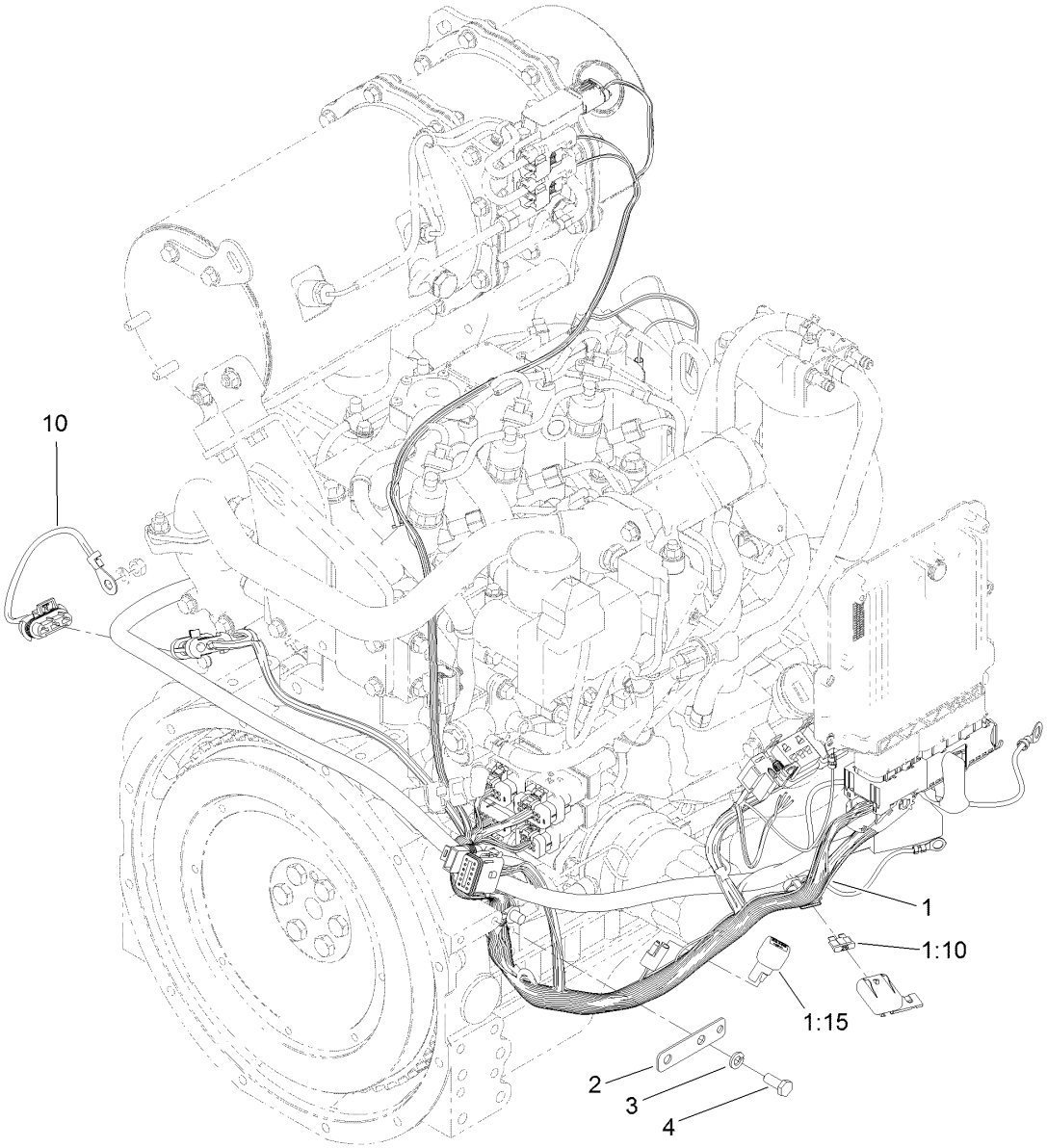

Engine Harness Assembly

Ref.	Part Number	Qty.	Description
1	119-4371	1	Harness-Wire, Yanmar
1:10	109102	1	Fuse-Blade, 25 Amp
1:15	100-4918	3	Diode-Over Molded
2	121-5636	1	Tab-Harness
3	3253-4	2	Washer-Lock
4	33114-020	2	Screw-HH
10	99-3441	1	Harness-Wire, Fusible Link

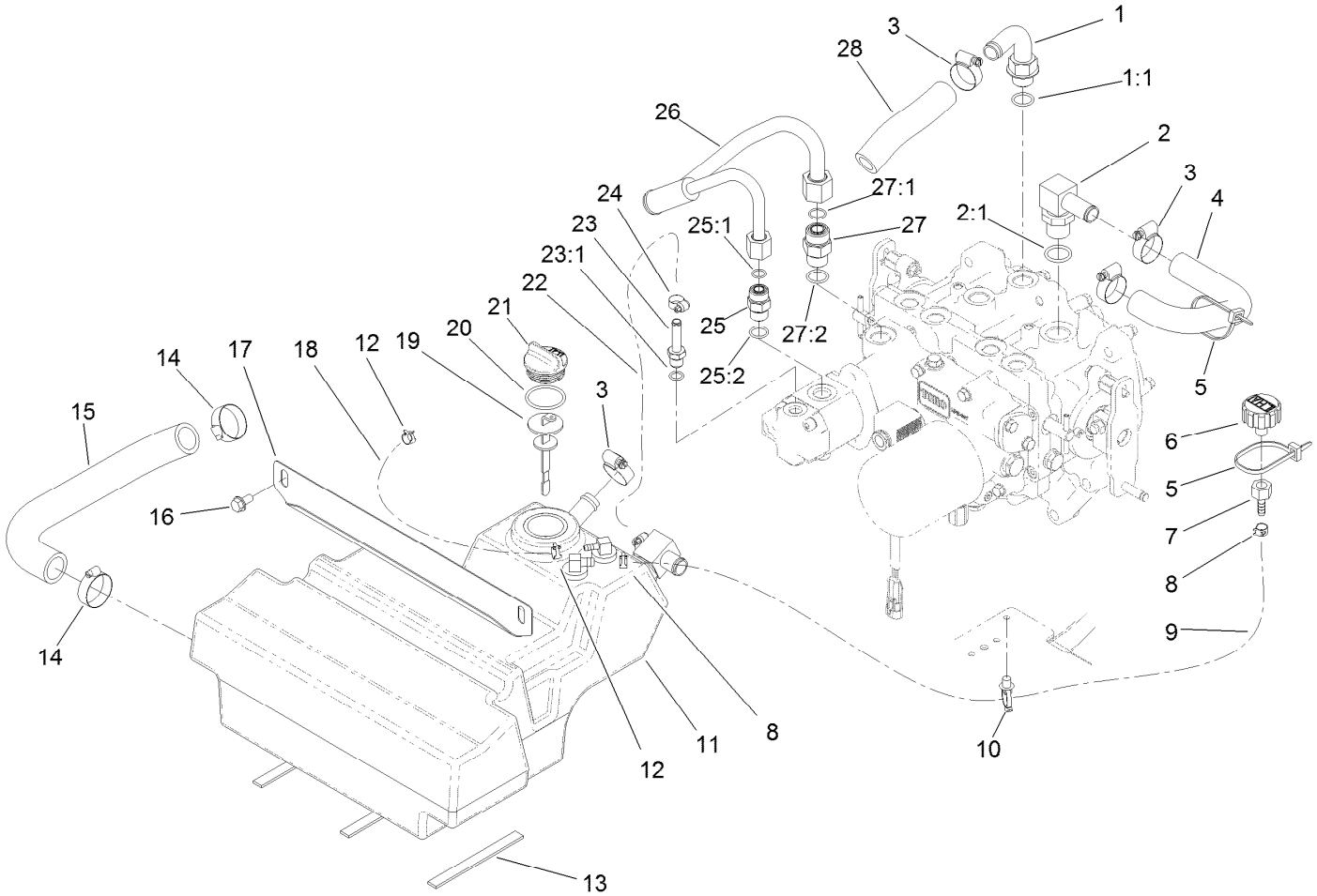

Hydraulic Reservoir Assembly

Ref.	Part Number	Qty.	Description
1	110-5522	1	Fitting-Elbow, 90
1:1	237-80	1	O-Ring
2	353-987	1	Fitting-HYD, 90 DEG (Barbed)
2:1	237-81	1	O-Ring
3	2412-129	4	Clamp-Hose
4	110-5524	1	Hose-Return
5	3290-379	2	Tie-Cable
6	68-6150	1	Breather
7	354-95	1	Fitting-Straight
8	92-2379	2	Clamp-Hose
9	110-9662	1	Hose-Fuel
10	32180-030	1	Clip-Tie
11	110-8237	1	HYD Reservoir ASM
12	2412-98	2	Clamp-Hose
13	120-0017	3	Strip-Foam
14	2412-34	2	Clamp-Hose
15	110-5526	1	Hose-Suction
16	32144-14	2	Screw-HWHTF
17	110-5529-03	1	Support-Reservoir
18	109-0299	1	Hose-Fuel
19	112-6365	1	Dipstick
20	94-8166	1	O-Ring
21	93-7498	1	Plug-Plastic
22	94-5625	1	Hose-Overflow, Radiator
23	353-979	1	Fitting-Straight
23:1	237-42	1	O-Ring
24	2412-108	2	Clamp-Worm
25	340-4	1	Fitting-HYD, Straight
25:1	237-30	1	O-Ring
25:2	237-79	1	O-Ring
26	110-5532	1	Tube
27	340-7	1	Adapter
27:1	237-65	1	O-Ring
27:2	237-80	1	O-Ring
28	112-1680	1	Hose-HYD

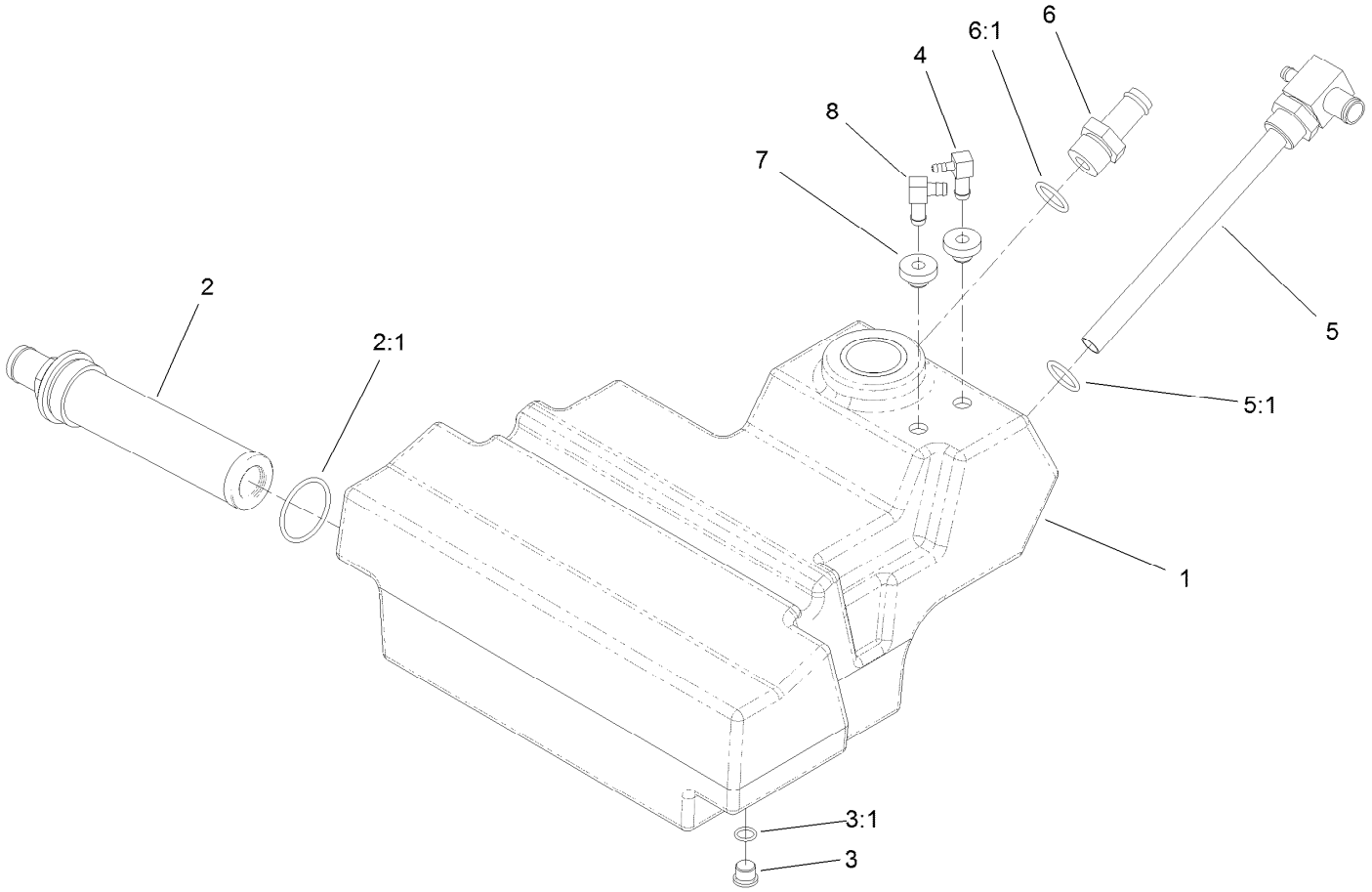

Hydraulic Reservoir Assembly No. 110-8237

Ref.	*Part Number*	*Qty.*	*Description*
1	108-5200	1	Reservoir-HYD
2	104-7546	1	Tank Strainer ASM
2:1	340-136	1	O-Ring
3	353-989	1	Plug-Hex, Hollow
3:1	237-42	1	O-Ring
4	104-5228	1	Fitting-Elbow, 90 DEG
5	108-9894	1	Fitting-Elbow, Special
5:1	237-81	1	O-Ring
6	354-73	1	Fitting-Straight
6:1	237-81	1	O-Ring
7	46-6560	2	Bushing
8	46-6550	1	Fitting-Elbow, 90 DEG

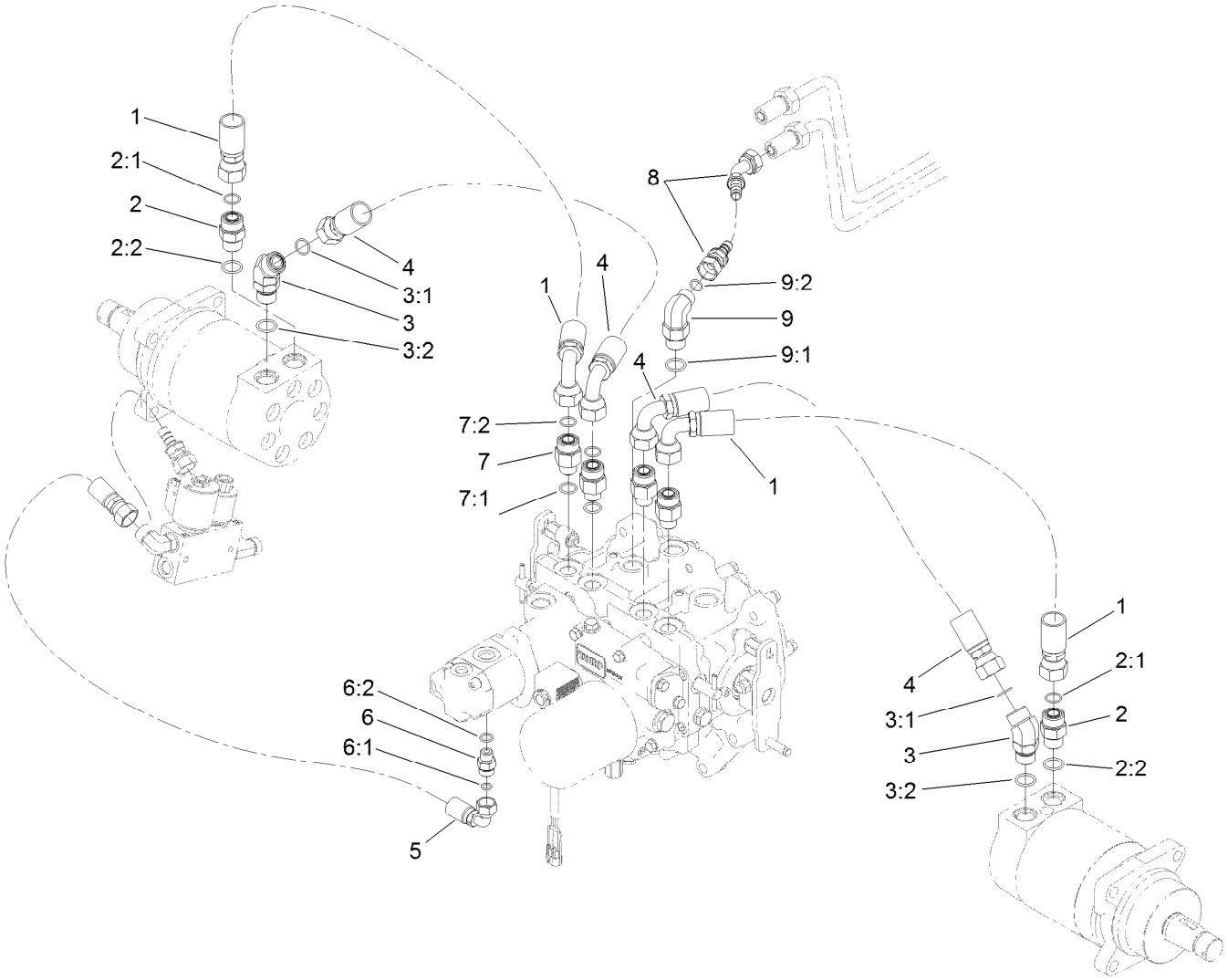

Hydraulic Hose Routing Assembly

Ref.	Part Number	Qty.	Description
1	112-1683	2	Hose
2	340-7	2	Adapter
2:1	237-65	1	O-Ring
2:2	237-80	1	O-Ring
3	340-14	2	Fitting-HYD, 45 DEG
3:1	237-65	1	O-Ring
3:2	237-80	1	O-Ring
4	110-5518	2	Hose
5	127-4910	1	Hose-HYD
6	340-2	1	Fitting-HYD, Straight

Ref.	Part Number	Qty.	Description
6:1	237-22	1	O-Ring
6:2	237-42	1	O-Ring
7	340-155	4	Fitting-HYD, Straight
7:1	237-79	1	O-Ring
7:2	237-151	1	O-Ring
8	121-3372	1	Hose-HYD
9	340-105	1	Fitting-HYD, 90 DEG
9:1	237-80	1	O-Ring
9:2	237-30	1	O-Ring

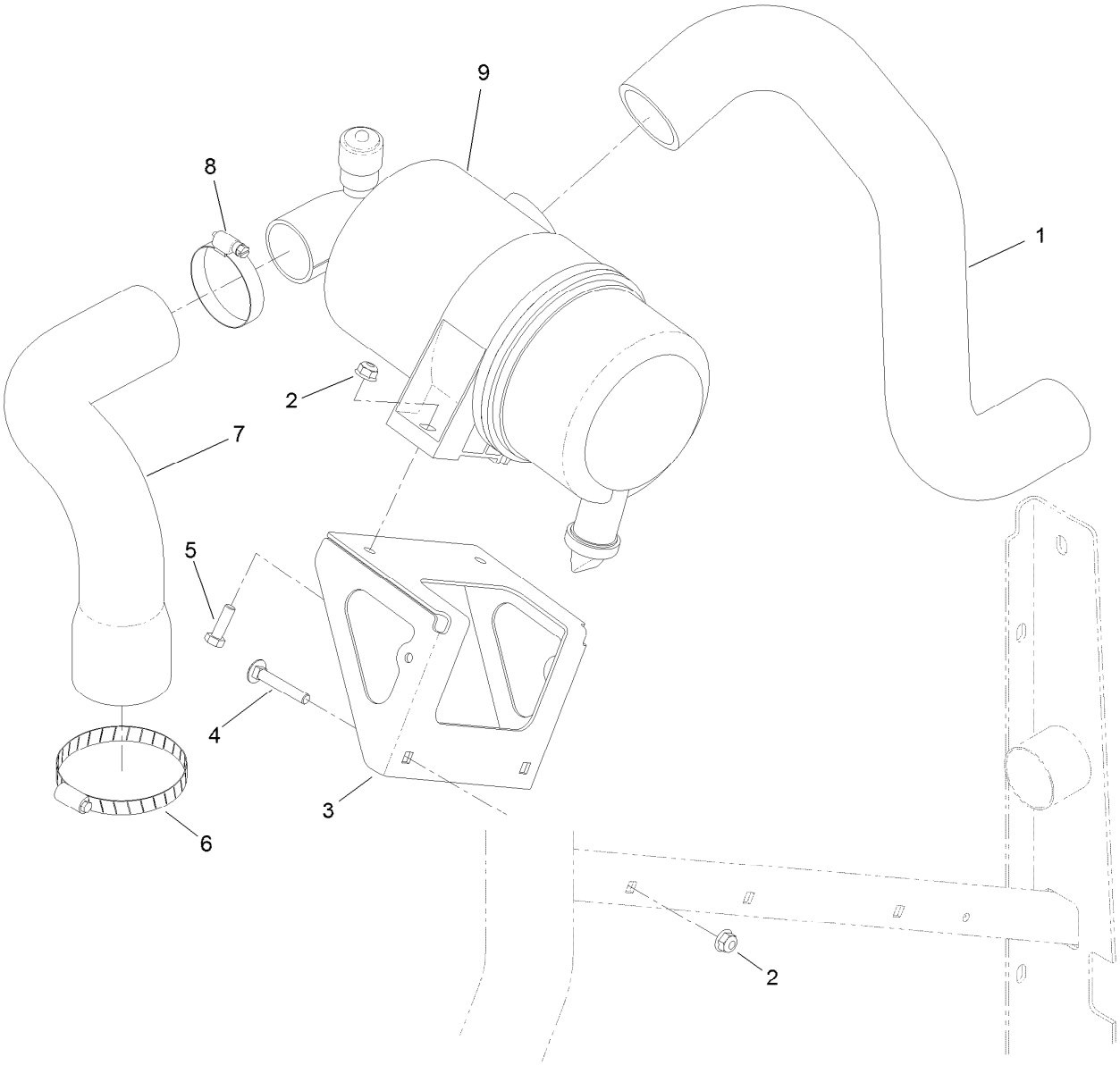

Air Cleaner Assembly

Ref.	Part Number	Qty.	Description
1	120-9177	1	Hose-Air
2	104-8300	4	Nut-Flange, NI
3	120-9198-03	1	Bracket-Air Cleaner
4	3230-6	2	Screw-CARR
5	322-5	2	Screw-HH
6	2412-125	1	Clamp-Hose
7	120-9199	1	Hose-Air
8	2412-130	1	Clamp-Hose
9	104-3428	1	Air Cleaner ASM

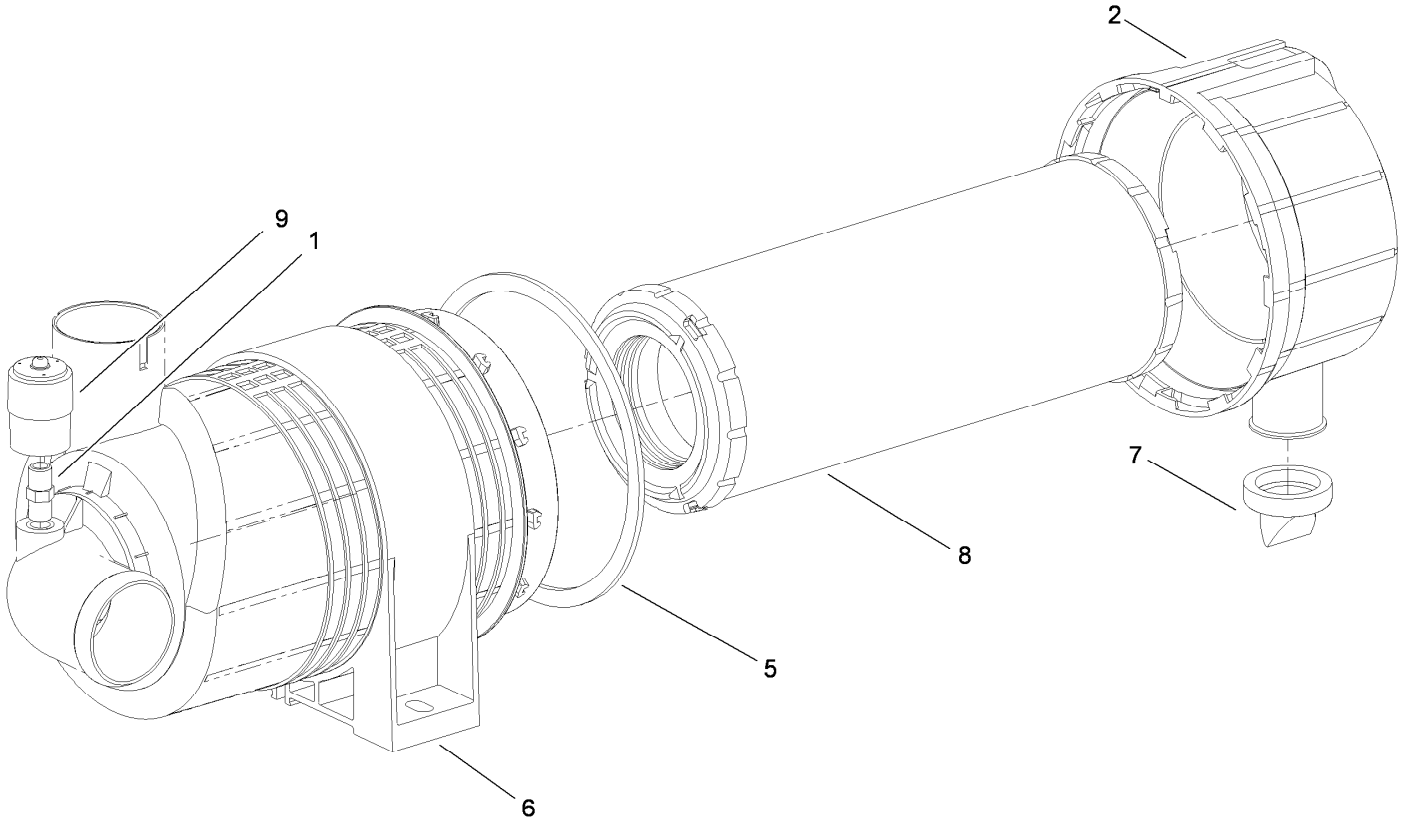

Air Cleaner Assembly No. 104-3428

Ref.	*Part Number*	*Qty.*	*Description*
1	105-4292	1	Nipple-Pipe
2	104-0497	1	Cover
5	104-4897	1	Gasket
6	98-4525	1	Bracket-Cleaner, Air
7	104-0498	1	Valve-Vacuator
8	108-3810	1	Filter-Air
9	93-9164	1	Indicator-Mini

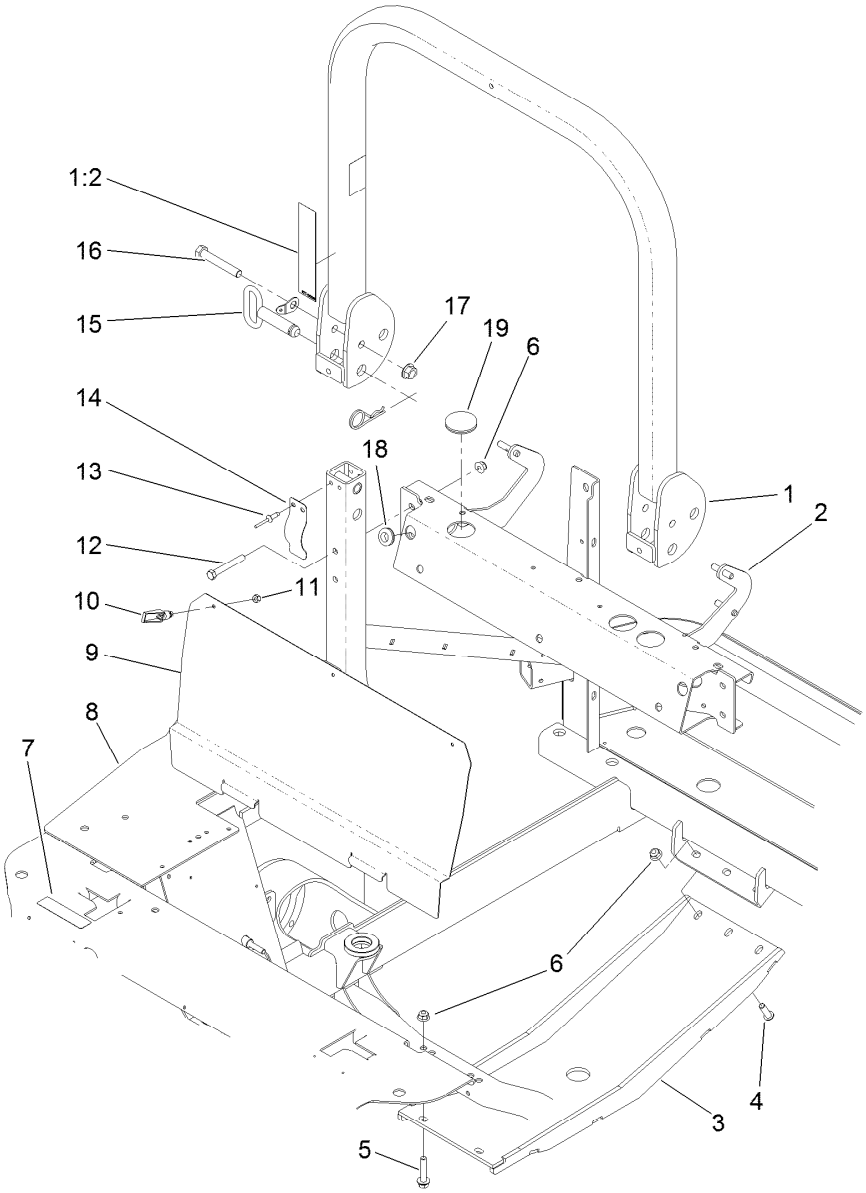

Frame and Upper-ROPS Assembly

Ref.	Part Number	Qty.	Description
1	110-9770	1	Upper ROPS ASM
1:2	107-3069	1	Decal-Warning, Folding ROPS
2	130-5995-03	1	Crossmember ASM
3	125-2660-03	1	Skid
4	3274-63	3	Screw-HSBH
5	3274-107	2	Screw-HSBH
6	104-8301	9	Nut-Flange, NI
7	117-2718	1	Decal-Arrester, Spark
8	120-0060-03	1	Frame-Rear
9	121-3381-03	1	Panel-Rear

Ref.	Part Number	Qty.	Description
10	74-5950	3	Latch-Swell
11	1-804254	3	Nut-Lock, HH
12	323-13	4	Screw-HH
13	3290-412	4	Rivet
14	110-5696	2	Spring-Leaf
15	103-4553	2	Pin-Fold, ROPS
16	112-7264	2	Screw-HH
17	32128-23	2	Nut-HF
18	105-5761	3	Grommet
19	237-124	2	Grommet

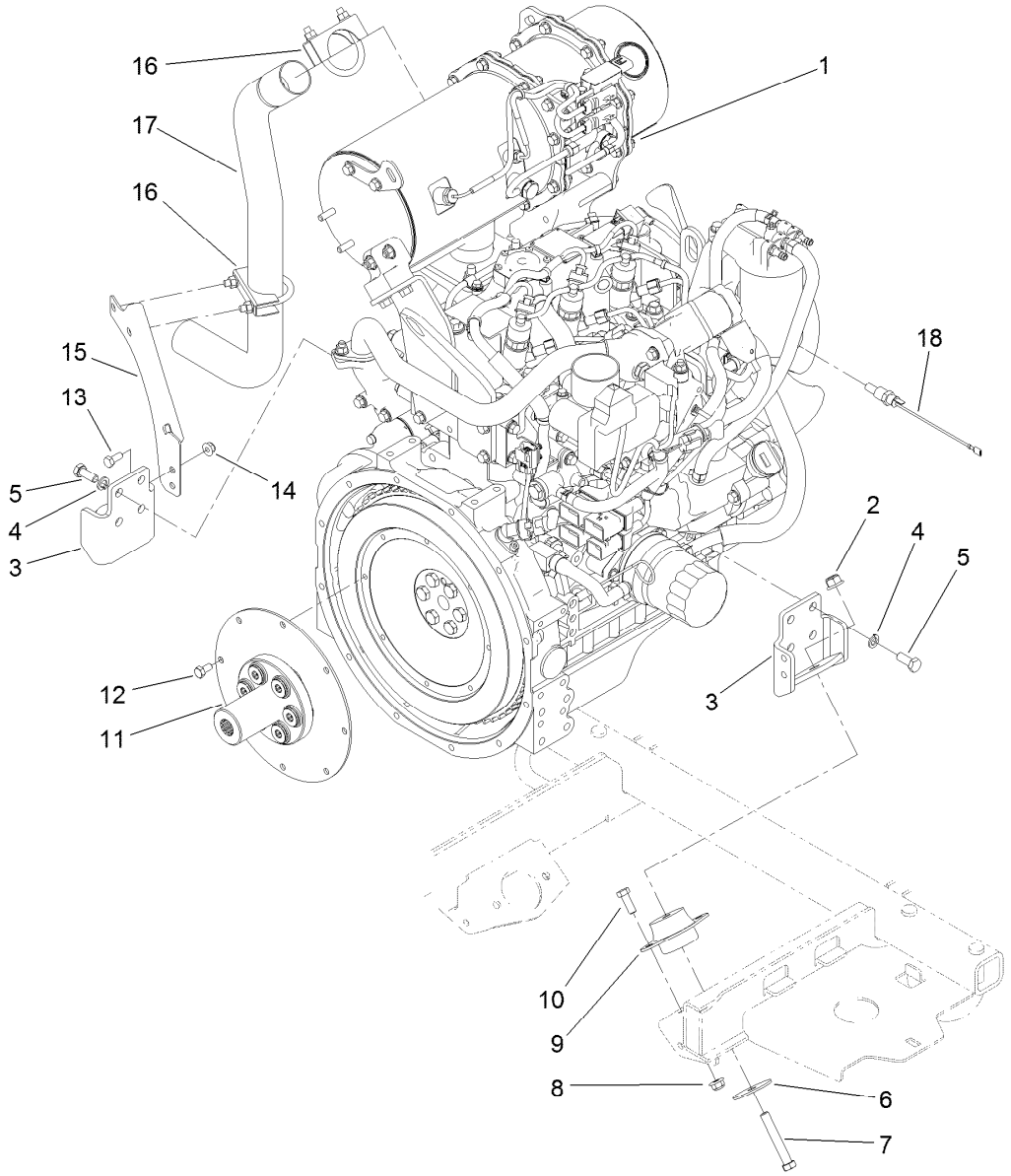

Engine Assembly

Ref.	Part Number	Qty.	Description
1	120-9160	1	Engine-Yanmar, Diesel
2	114-8417	2	Nut-HF, NI
3	120-9180-03	2	Mount-Motor, Upper
4	48-9590	8	Washer-Lock
5	33115-025	8	Screw-HH
6	87-5100	2	Washer-Snubbing
7	324-11	2	Screw-HH
8	104-8301	4	Nut-Flange, NI
9	53-9681	2	Mount-Engine

Ref.	Part Number	Qty.	Description
10	323-6	4	Screw-HH
11	120-9131	1	Coupling-Flywheel
12	99-5132	8	Bolt
13	104-8300	2	Nut-Flange, NI
14	322-3	2	Screw-HH
15	127-6450-03	1	Support-Exhaust
16	18-2130	2	Clamp
17	120-9137	1	Tube-Exhaust
18	112-6347	1	Switch-Temp, Dual

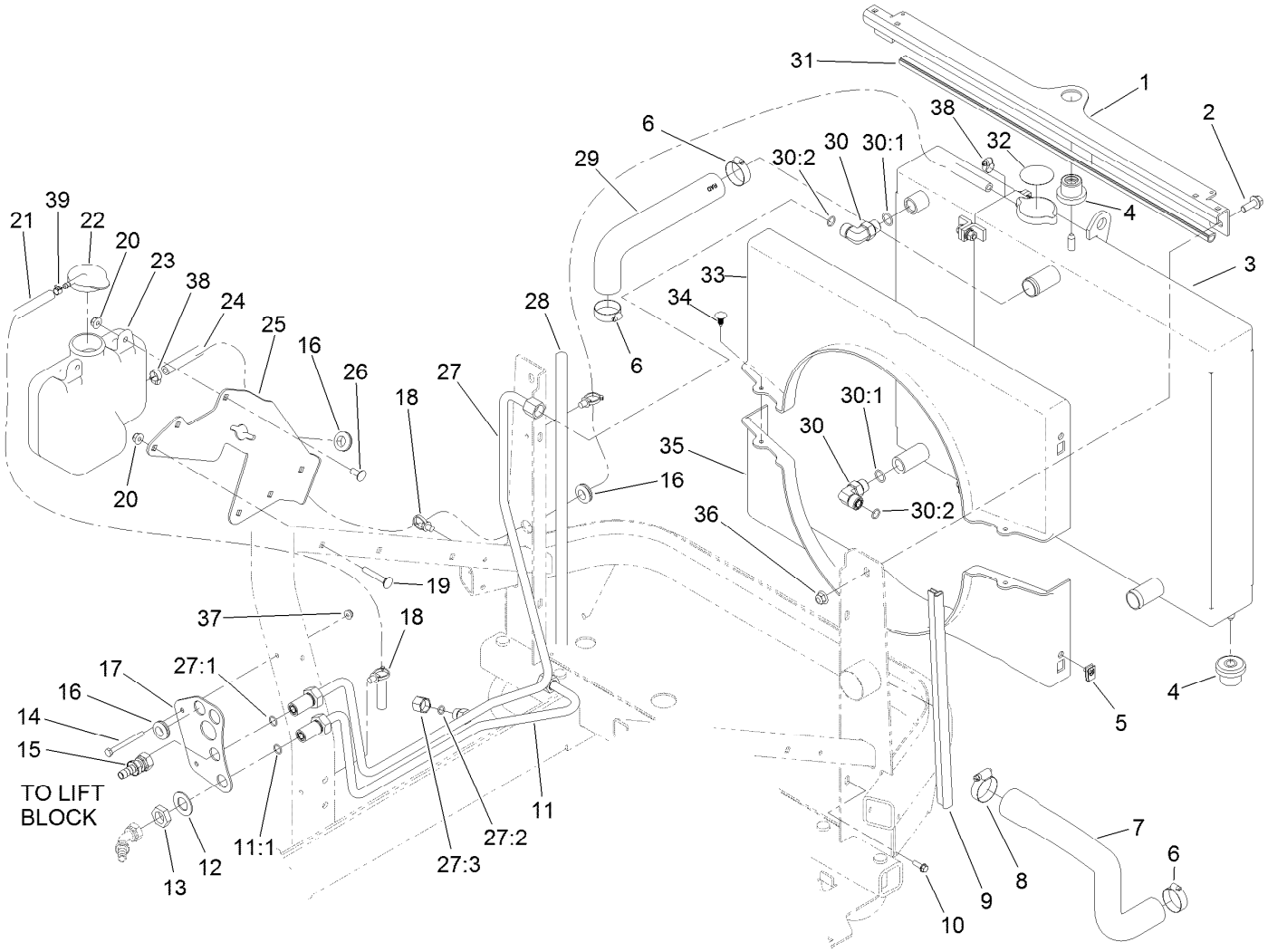

Radiator Assembly

Ref.	Part Number	Qty.	Description
1	120-0068-03	1	Bracket-Cooling, Top
2	3234-42	2	Screw-HHF
3	121-3330	1	Cooling ASM
4	119-1422	3	Mount-Isolator
5	107069	4	Clip
6	2412-34	3	Clamp-Hose
7	121-3322	1	Hose-Radiator, Lower
8	2412-3	1	Clamp-Hose
9	120-9146	2	Seal-Bulb
10	32105-15	4	Screw-HWH
11	121-3324	1	HYD Tube ASM
11:1	237-30	1	O-Ring
12	69-8930	2	Washer
13	340-127	2	Nut-Bulkhead
14	321-14	2	Screw-HH
15	121-3373	1	Hose-HYD
16	237-124	4	Grommet
17	121-3318	1	Bracket-Bulkhead
18	32180-030	3	Clip-Tie
19	3230-6	2	Screw-CARR
20	104-8300	4	Nut-Flange, NI

Ref.	Part Number	Qty.	Description
21	110-8255	1	Hose-Fuel
22	1-643164	1	Cap-Tank, Overflow
23	125-2651	1	Bottle-Overflow
24	110-3258	1	Hose-Fuel
25	125-2656-03	1	Bracket-Bottle
26	3230-23	2	Screw-CARR
27	121-3323	1	HYD Tube ASM
27:1	237-30	1	O-Ring
27:2	237-22	1	O-Ring
27:3	340-117	1	Cap
28	119-1426	2	Seal-Bulb
29	121-3321	1	Hose-Radiator, Upper
30	340-98	2	Fitting-HYD, 90 DEG
30:1	237-79	1	O-Ring
30:2	237-30	1	O-Ring
31	119-1427	2	Seal-Bulb
32	117-3276	1	Decal-Danger
33	121-3312	1	Shroud-Top
34	117-2382	2	Plug-Plastic
35	121-3311	1	Shroud-Bottom
36	104-8301	2	Nut-Flange, NI

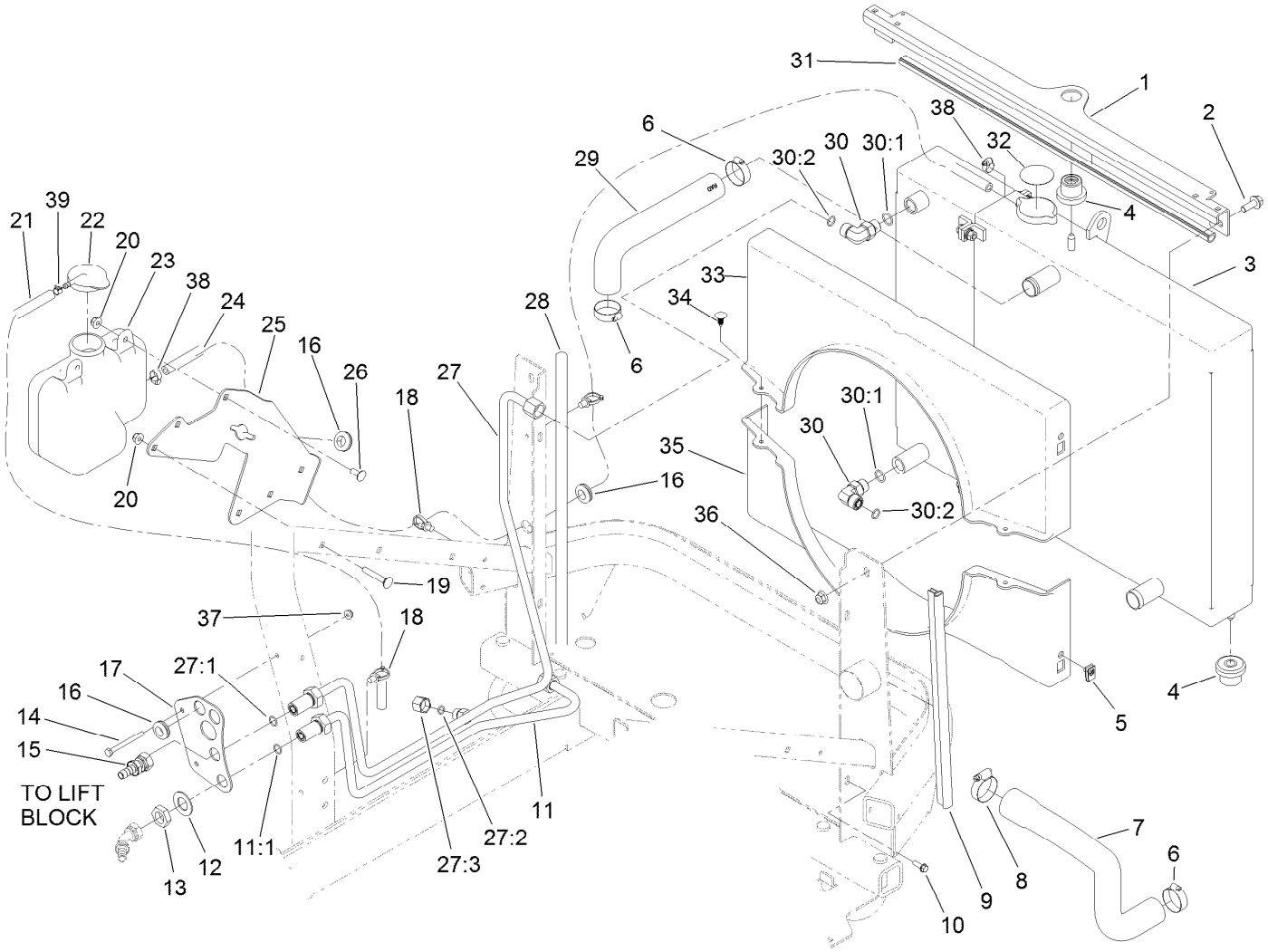

Radiator Assembly (continued)

Ref.	Part Number	Qty.	Description
37	104-7201	2	Nut-Flange, NI

Ref.	Part Number	Qty.	Description
38	2412-108	1	Clamp-Worm
39	2412-80	1	Clamp-Hose

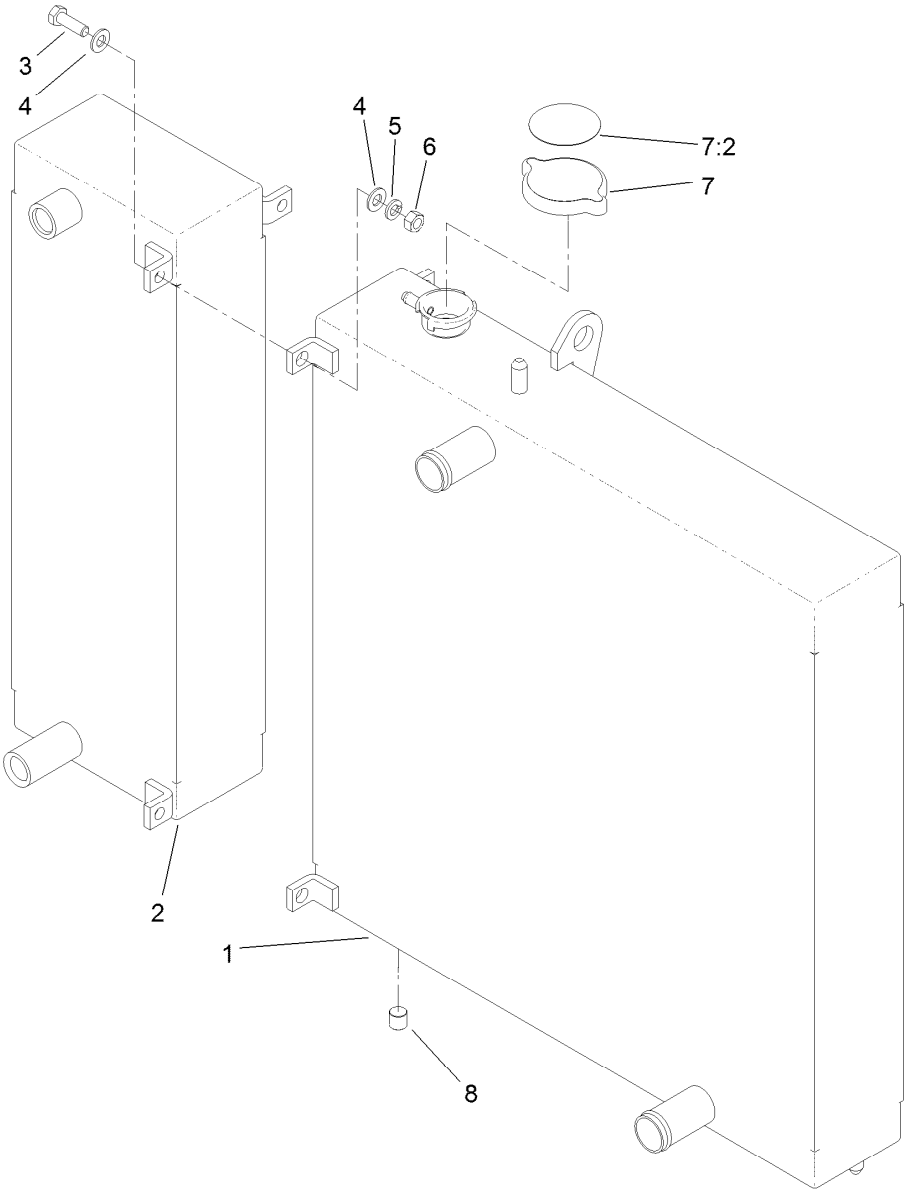

Cooling Assembly No. 121-3330

Ref.	*Part Number*	*Qty.*	*Description*
1	121-3328	1	Radiator
2	121-3329	1	Oil Cooler
3	322-5	3	Screw-HH
4	3256-23	6	Washer-Flat
5	3253-4	3	Washer-Lock
6	3217-6	3	Nut-Hex
7	119-1430	1	Radiator Cap ASM
7:2	117-3276	1	Decal-Danger
8	99-8551	1	Plug-Pipe

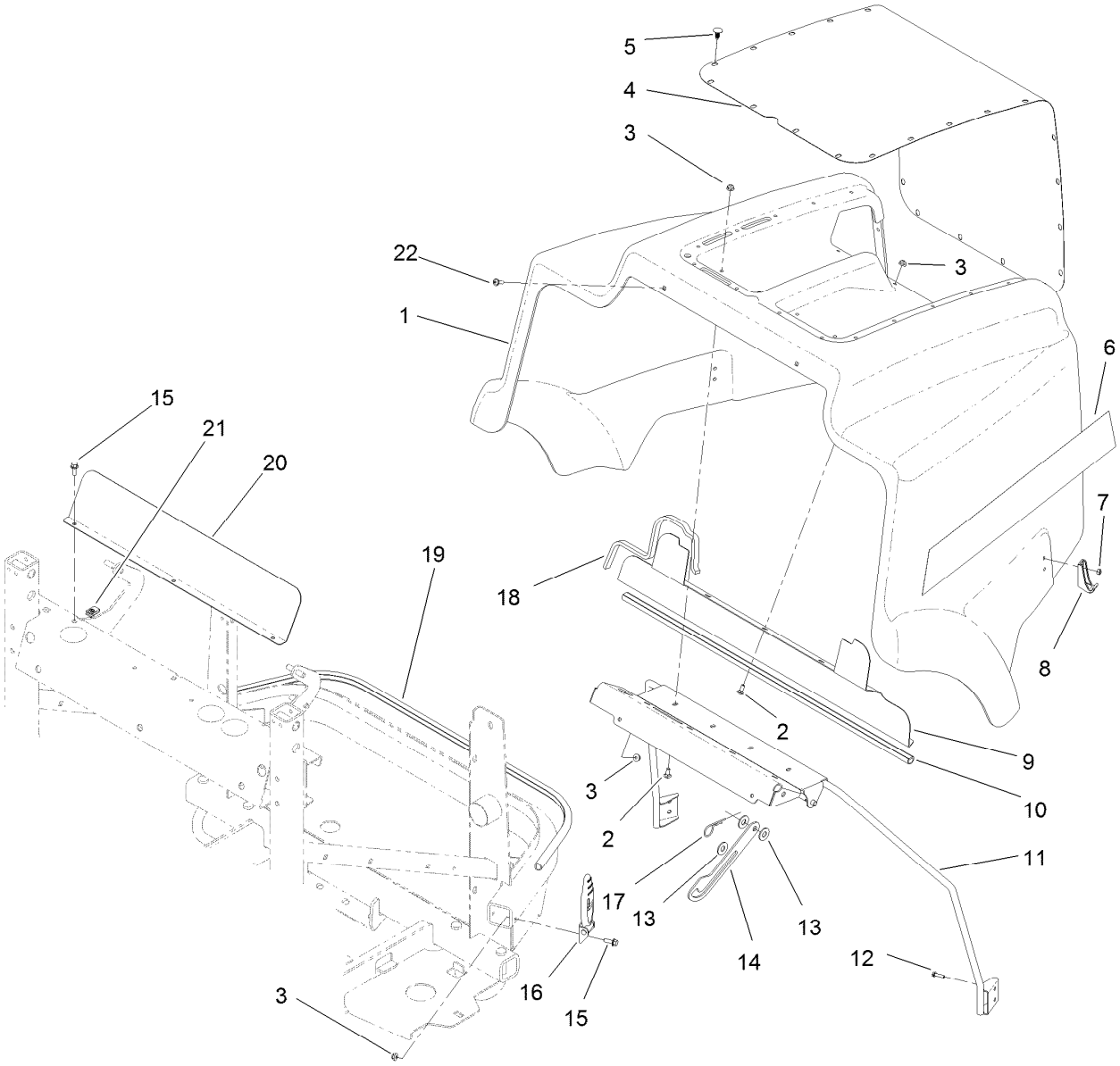

Hood Assembly

Ref.	Part Number	Qty.	Description
1	125-2709	1	Hood
2	3229-11	7	Screw-CARR
3	104-7201	11	Nut-Flange, NI
4	120-9134-03	1	Screen-Intake
5	117-2382	26	Plug-Plastic
6	110-5545	2	Decal-Hood
7	3296-2	4	Nut-Lock, NI
8	103-2897	2	Latch-Catch
9	120-9121-03	1	Plate-Seal
10	120-9147	1	Seal-Bulb
11	120-9126-03	1	Support-Hood

Ref.	Part Number	Qty.	Description
12	3274-39	4	Screw-HSBH
13	3256-4	3	Washer-Flat
14	120-9129	1	Prop-Hood
15	3234-4	5	Screw-HHF
16	103-2898	2	Latch-Rubber
17	3290-255	2	Pin-Cotter, Hair
18	121-3335	2	Seal-Foam
19	120-9161	1	Seal-Bulb
20	120-9139-03	1	Shield-Air
21	107069	3	Clip
22	92-3911	2	Screw-HSBH

Cylinder Block Assembly

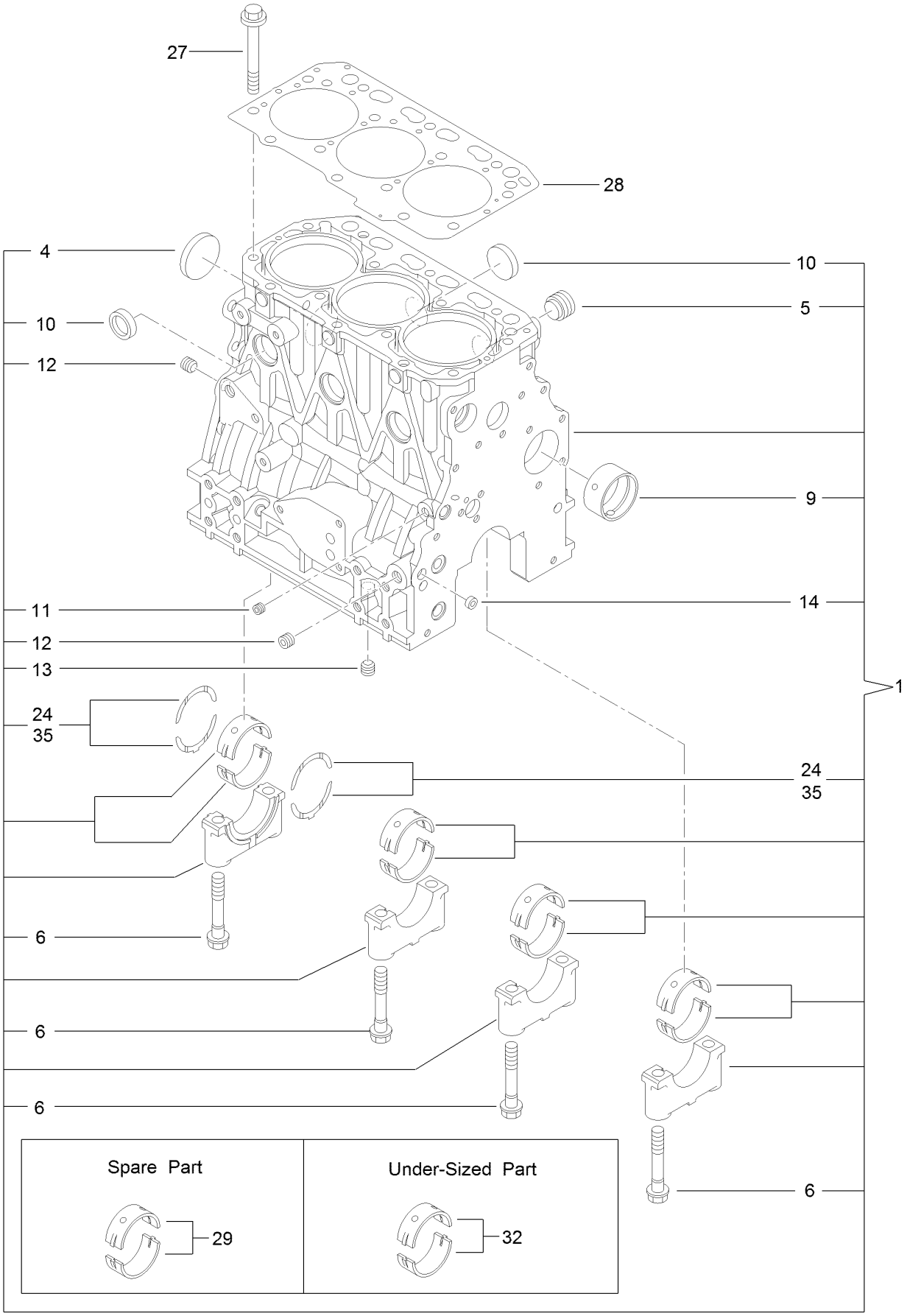

Cylinder Block Assembly (continued)

Ref.	Part Number	Qty.	Description
1	127-4717	1	Cylinder Block ASM
4	125-6980	1	Plug
5	125-7170	1	Plug
6	125-7007	8	Bolt
9	125-7108	1	Bushing
10	125-7239	6	Plug
11	125-6969	1	Plug
12	125-6973	2	Plug
13	125-6973	1	Plug
14	125-7237	1	Plug
24	125-7010	2	Metal-Thrust
27	125-7006	14	Bolt
28	127-4716	1	Head Gasket ASM
29	125-6981	4	Metal-Main
32	125-7009	4	Metal-Main (0.25)
35	125-7011	1	Metal-Thrust (0.25)

Gear Housing Assembly

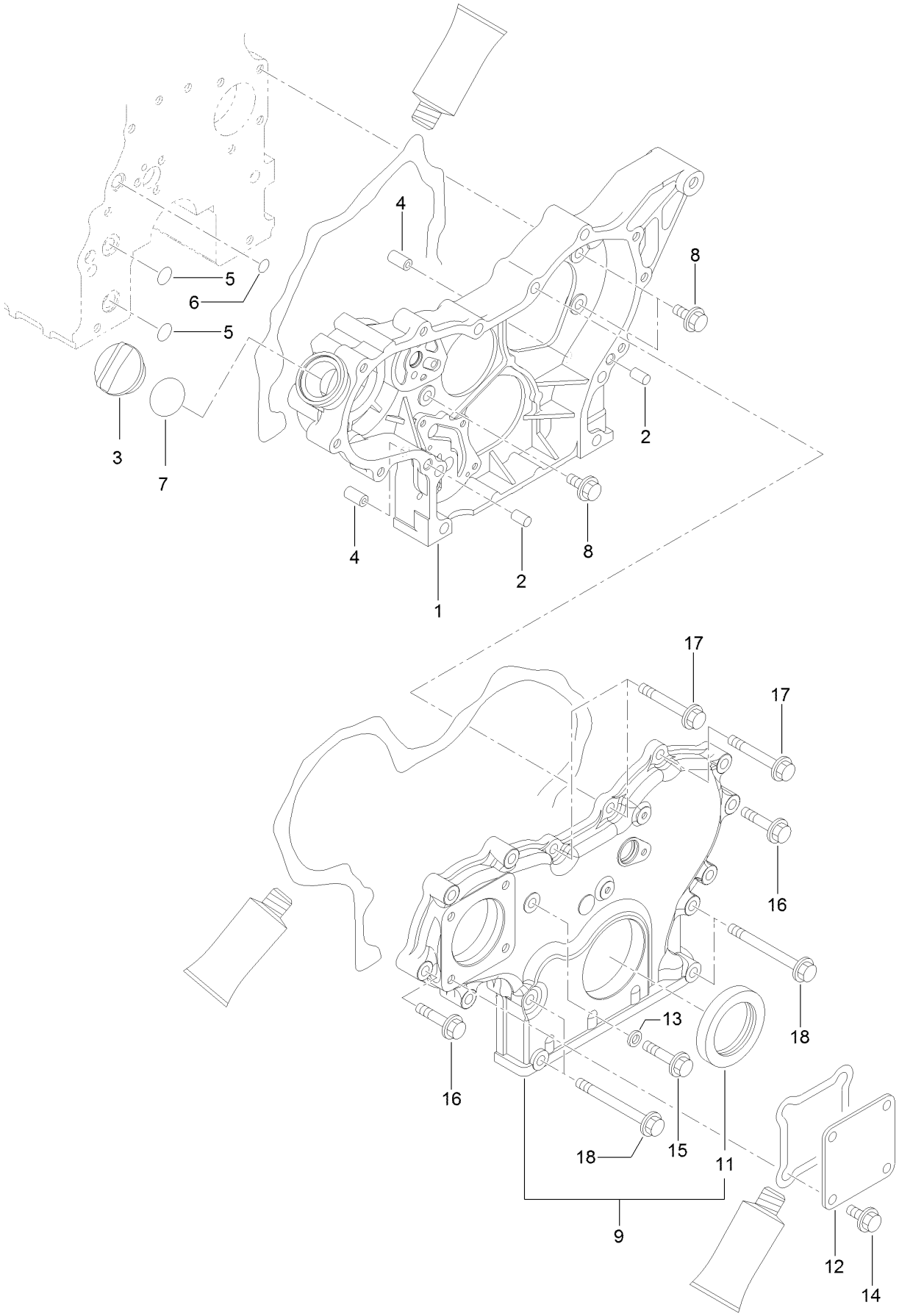

Gear Housing Assembly (continued)

Ref.	Part Number	Qty.	Description
1	127-3023	1	Case-Gear
2	125-6995	2	Pin
3	125-6972	1	Cover
4	125-7107	2	Pipe
5	125-6909	2	O-Ring
6	127-2973	1	O-Ring
7	125-7197	1	O-Ring
8	100-6928	3	Bolt
9	127-3024	1	Gearcase Cover ASM

Ref.	Part Number	Qty.	Description
11	125-6944	1	Seal-Oil
12	125-6977	1	Cover
13	125-7174	1	Washer-Seal
14	100-6928	4	Bolt
15	125-7217	1	Bolt
16	125-7218	7	Bolt
17	125-7222	3	Bolt
18	125-7224	4	Bolt

Cylinder Head and Cover Assembly

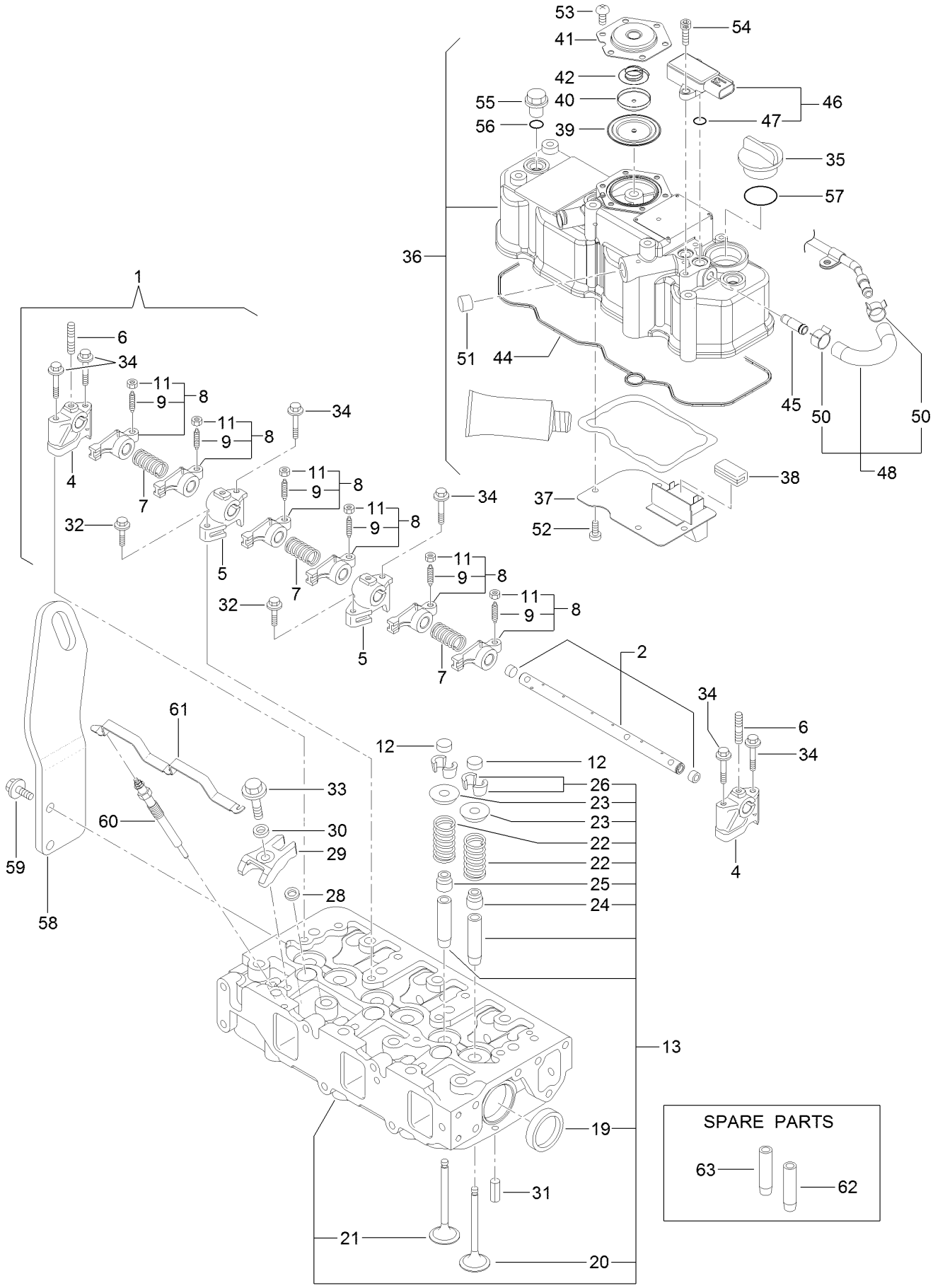

Cylinder Head and Cover Assembly (continued)

Ref.	Part Number	Qty.	Description
1	127-3757	1	Shaft ASM
2	127-3758	1	Shaft
4	127-2974	2	Support
5	127-2975	2	Support
6	127-3759	3	Stud
7	127-2995	3	Spring
8	127-2989	6	Arm-Rocker
9	125-7013	6	Screw
11	125-7014	6	Nut
12	127-2996	6	Cap
13	127-4720	1	Cylinder Head ASM
19	125-7240	2	Plug
20	127-2990	3	Valve
21	127-4710	3	Valve
22	127-3012	6	Spring
23	127-3013	6	Retainer
24	127-2986	3	Seal-Stem, Valve
25	127-3027	3	Seal-Stem, Valve
26	127-3186	6	Pin-Cotter
28	127-3021	3	Gasket-Injector
29	127-3028	3	Retainer-Injector
30	127-2980	3	Washer
31	125-7184	2	Pin-Spring
32	125-7215	2	Bolt
33	125-7217	3	Bolt
34	125-7220	6	Bolt
35	125-6972	1	Cover

Ref.	Part Number	Qty.	Description
36	127-4719	1	Cylinder Head Cover ASM
37	127-2988	1	Plate
38	125-7012	1	Baffle
39	125-6959	1	Diaphragm
40	125-6960	1	Plate
41	125-6961	1	Plate
42	125-6962	1	Spring
44	127-3856	1	Gasket-Head, Cylinder
45	127-3026	1	Joint
46	127-3029	1	Sensor-Pressure
47	127-3032	2	O-Ring
48	127-3040	1	Hose ASM
50	127-3041	2	Clip-Hose
51	125-6913	1	Plug
52	125-7186	4	Screw
53	125-7186	6	Screw
54	127-3184	2	Bolt
55	125-6974	3	Knob
56	93-0418	3	O-Ring
57	125-7197	1	O-Ring
58	127-4718	1	Lifter-Engine
59	100-6928	2	Bolt
60	127-2991	3	Plug
61	127-3768	1	Connector-Plug, Glow
62	127-2979	3	Guide
63	127-2997	3	Guide

Suction Manifold Assembly

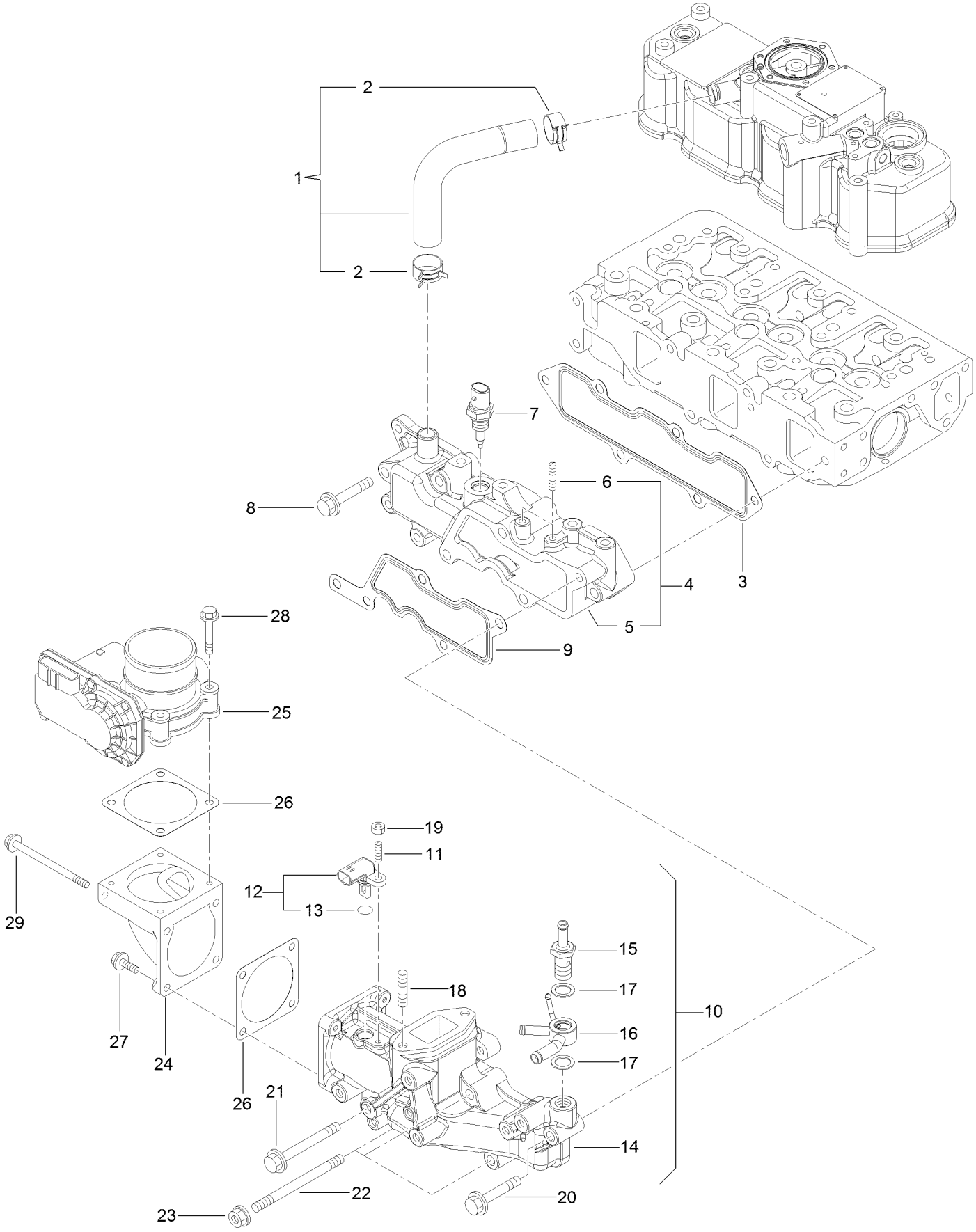

Suction Manifold Assembly (continued)

Ref.	Part Number	Qty.	Description
1	127-4704	1	Pipe
2	125-7040	2	Clip
3	127-3857	1	Gasket-Manifold, Intake
4	127-4722	1	Intake Manifold ASM
5	127-4721	1	Manifold-Intake
6	127-3180	2	Stud
7	127-3031	1	Sensor-Temp, Air
8	125-7220	3	Bolt
9	127-3034	1	Gasket-Collector
10	127-4725	1	Intake Collector ASM
11	127-4701	1	Stud
12	127-3030	1	Sensor-Temp, Air
13	127-3033	1	O-Ring
14	127-4724	1	Collector-Intake
15	127-3080	1	Joint-Hose
16	127-3081	1	Joint-Hose
17	127-3166	2	Washer-Seal
18	127-4774	2	Stud
19	127-4775	1	Nut
20	125-7220	1	Bolt
21	127-3178	1	Bolt
22	127-3182	3	Stud
23	125-7229	3	Nut
24	127-3035	1	Bend-Inlet
25	127-3036	1	Body-Throttle
26	127-3037	2	Gasket-Throttle
27	125-7209	2	Bolt
28	125-7211	4	Bolt
29	127-3177	2	Bolt

Exhaust Manifold Assembly

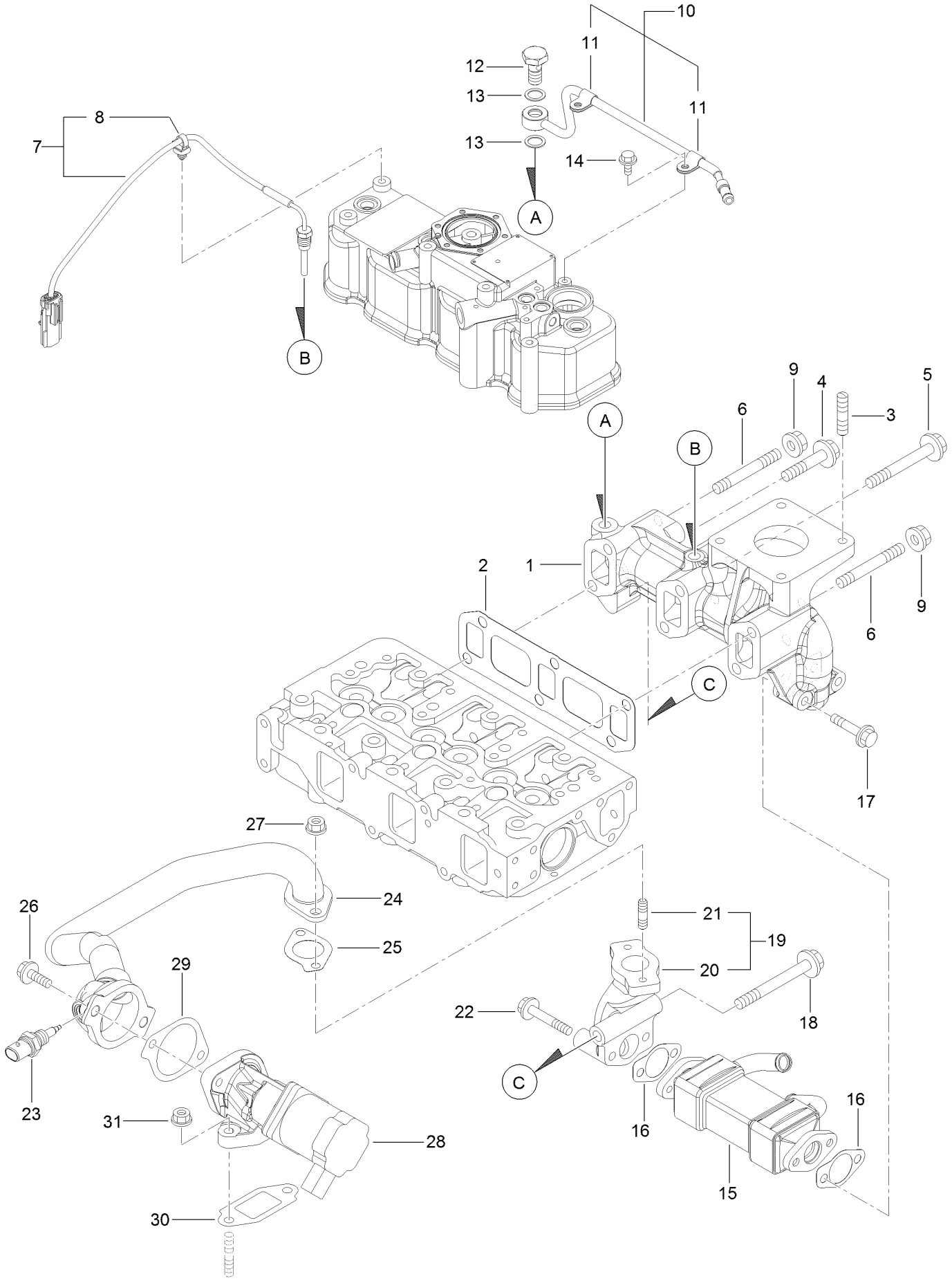

Exhaust Manifold Assembly (continued)

Ref.	Part Number	Qty.	Description
1	127-4726	1	Manifold-Exhaust
2	127-3775	1	Gasket-Manifold, Exhaust
3	127-2984	4	Stud
4	127-3094	1	Bolt
5	127-3044	3	Bolt-M10
6	127-4756	2	Stud
7	127-4729	1	Sensor-Temp, Exhaust
8	127-3087	1	Band-Clip
9	125-7230	2	Nut
10	127-3038	1	Exhaust Pipe ASM
11	127-3173	2	Clamp
12	127-3039	1	Bolt-Joint, Pipe
13	127-3174	2	Gasket
14	125-7206	2	Bolt
15	127-3042	1	Cooler-E G R
16	127-3043	2	Gasket-Cooler, E G R
17	127-2976	2	Bolt
18	127-3022	1	Bolt-Flange
19	127-3048	1	E G R Pipe ASM
20	127-3049	1	Pipe-Out, E G R
21	125-7043	2	Stud
22	125-7220	2	Bolt
23	127-3047	1	Sensor-Gas Temp, E G R
24	127-3780	1	E G R Pipe ASM
25	127-3016	1	Gasket
26	125-7215	2	Bolt
27	125-7229	2	Nut
28	127-3781	1	Valve-E G R
29	127-3050	1	Gasket-Intake Valve, E G R
30	127-3051	1	Gasket-Out Valve, E G R
31	125-7229	2	Nut

Diesel Particulate Filter Assembly

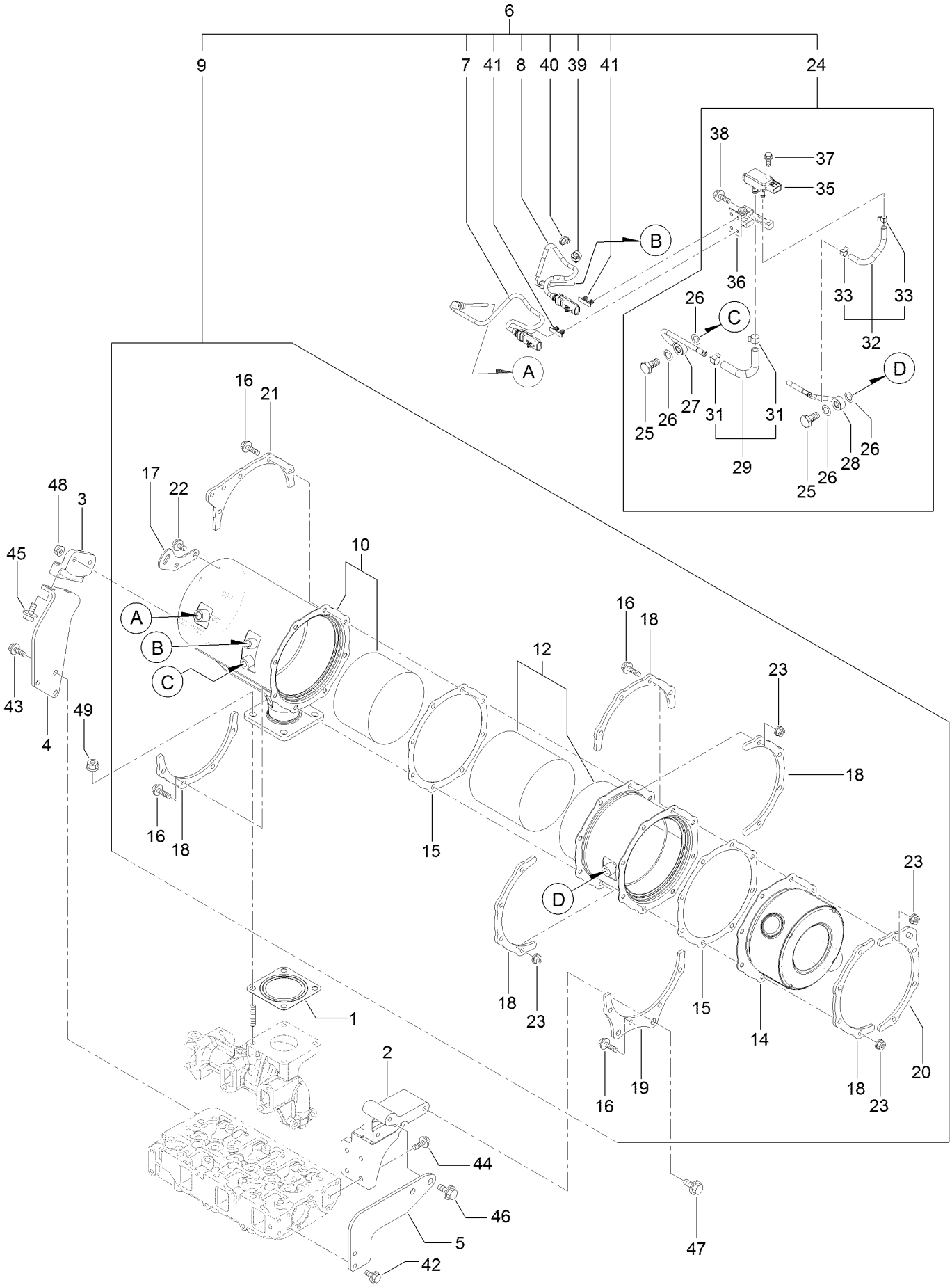

Diesel Particulate Filter Assembly (continued)

Ref.	Part Number	Qty.	Description
1	127-2987	1	Gasket
2	127-4738	1	Stay-D P F
3	127-4739	1	Stay-D P F
4	127-4740	1	Stay-D P F
5	127-4741	1	Stay-D P F
6	127-4760	1	D P F Unit
7	127-4764	1	Sensor-Temp, Exhaust
8	127-4765	1	Sensor-Temp, Exhaust
9	127-4759	1	D P F ASM
10	127-4732	1	Case-D O C
12	127-4734	1	Case-Filter, Soot
14	127-3786	1	Silencer-D P F
15	127-3859	2	Gasket-D P F
16	127-3055	16	Bolt
17	127-3788	1	Lifter-D P F
18	127-3789	5	Stiffener-D P F, A
19	127-4735	1	Stiffener-D P F, B
20	127-3792	1	Stiffener-D P F, C
21	127-4736	1	Stiffener-D P F, C
22	125-7213	2	Bolt
23	125-7229	16	Nut
24	127-4743	1	Pressure Sensor Unit
25	127-3039	2	Bolt-Joint, Pipe
26	127-3056	4	Gasket-Sensor
27	127-4744	1	Sensor Pipe ASM
28	127-4745	1	Sensor Pipe ASM
29	127-4747	1	Exhaust Hose ASM
31	127-3057	2	Clip-Hose
32	127-4748	1	Exhaust Hose ASM
33	127-3058	2	Clip-Hose
35	127-3060	1	Sensor-Pressure
36	127-4750	1	Bracket-Sensor
37	125-7208	2	Bolt
38	125-7595	2	Bolt
39	127-3087	1	Band-Clip
40	127-3124	1	Band
41	127-3088	2	Clip-Connnector
42	100-6928	2	Bolt
43	100-6928	3	Bolt
44	125-7594	4	Bolt
45	127-4773	2	Bolt
46	127-4773	2	Bolt
47	127-4773	2	Bolt
48	125-7229	2	Nut
49	125-7230	4	Nut

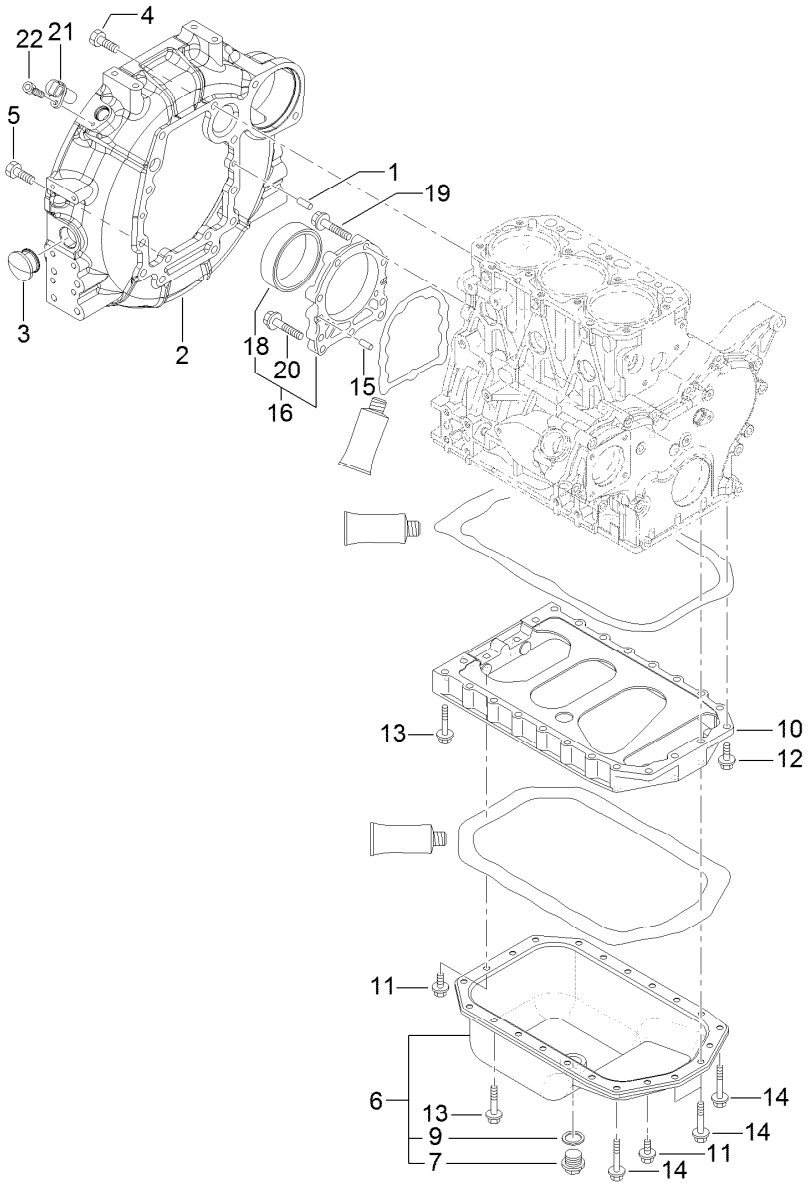

Flywheel Housing and Oil Sump Assembly

Ref.	Part Number	Qty.	Description
1	125-6995	2	Pin
2	127-4758	1	Housing-Flywheel
3	125-6910	1	Cap
4	125-7226	6	Bolt
5	125-7227	4	Bolt
6	127-4711	1	Oil Pan ASM
7	125-6912	1	Plug
9	125-7177	1	Washer-Seal
10	127-3756	1	Spacer
11	100-6928	4	Bolt

Ref.	Part Number	Qty.	Description
12	125-7215	2	Bolt
13	125-7219	16	Bolt
14	125-7220	4	Bolt
15	125-6995	2	Pin
16	125-6996	1	Case ASM
18	125-7106	1	Seal-Oil
19	125-7045	6	Bolt
20	125-7217	3	Bolt
21	127-3062	1	Sensor-Flywheel
22	127-3184	1	Bolt

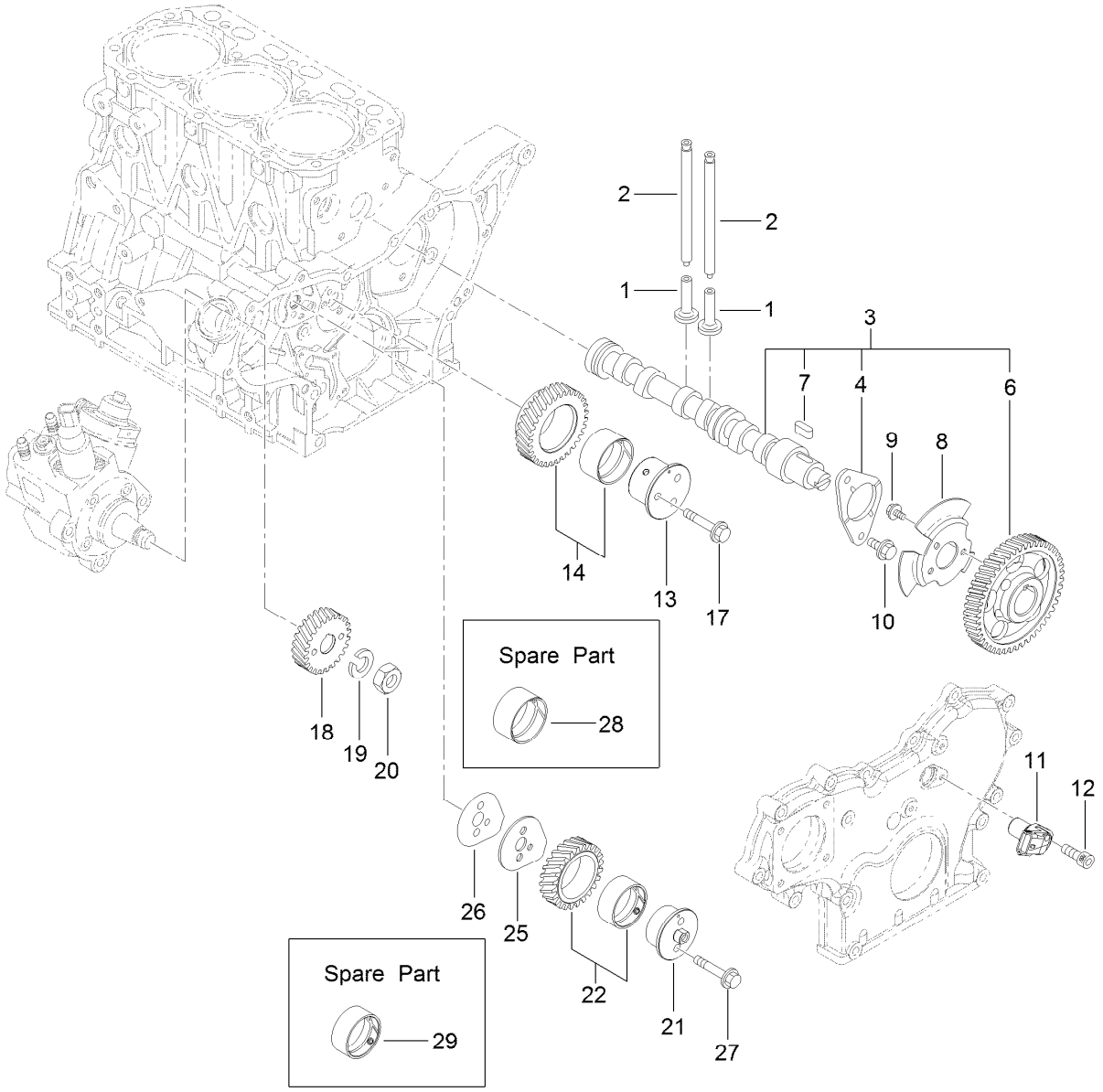

Camshaft and Driving Gear Assembly

Ref.	Part Number	Qty.	Description
1	125-7016	6	Tappet
2	125-7017	6	Rod-Push
3	127-3797	1	Camshaft ASM
4	125-7008	1	Metal-Thrust
6	127-3052	1	Gear-Camshaft
7	125-7185	1	Key
8	127-3053	1	Pulser-Camshaft
9	125-7205	3	Bolt
10	125-7213	2	Bolt
11	127-3054	1	Sensor-Rev, Gear
12	127-3184	1	Bolt
13	127-3063	1	Shaft-Idle, Gear A

Ref.	Part Number	Qty.	Description
14	127-3066	1	Idle Gear A ASM
17	125-7219	3	Bolt
18	127-3070	1	Gear-Pump, Supply
19	127-3167	1	Washer-Spring
20	127-3185	1	Nut
21	127-3064	1	Shaft-Idle, Gear B
22	127-3067	1	Idle Gear B ASM
25	127-3068	1	Plate-Idle, Shaft
26	127-3069	1	Gasket-Idle, Shaft B
27	125-7218	2	Bolt
28	125-6927	1	Bushing
29	127-3065	1	Bushing

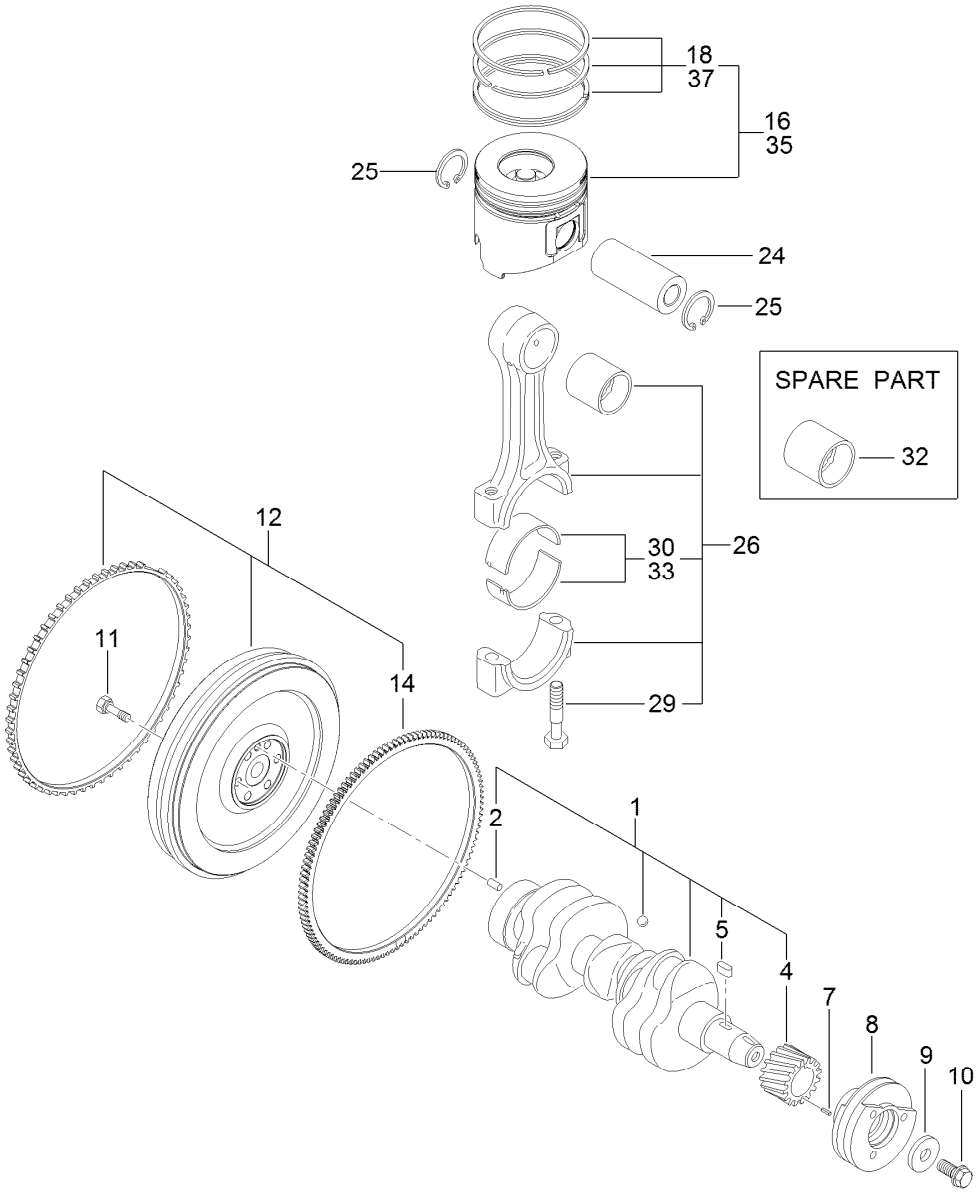

Crankshaft and Piston Assembly

Ref.	Part Number	Qty.	Description
1	127-3800	1	Crankshaft ASM
2	125-6995	1	Pin
4	125-6937	1	Gear
5	125-7185	1	Key
7	125-7182	1	Pin-Spring
8	127-3801	1	Pulley-V
9	125-7109	1	Washer
10	125-6956	1	Bolt
11	125-6951	6	Bolt
12	127-4761	1	Flywheel ASM
14	127-4703	1	Gear

Ref.	Part Number	Qty.	Description
16	127-4766	3	Piston ASM
18	127-4751	3	Piston Ring ASM
24	125-7030	3	Pin
25	125-7180	6	Ring
26	125-7242	3	Connecting Rod ASM
29	125-6955	6	Bolt
30	125-7018	3	Pin-Crank
32	125-6997	3	Pin-Piston
33	125-7019	3	Pin-Crank (.25)
35	127-4767	3	Piston ASM (0.25 O S)
37	127-4752	3	Ring Set (0.25 O S)

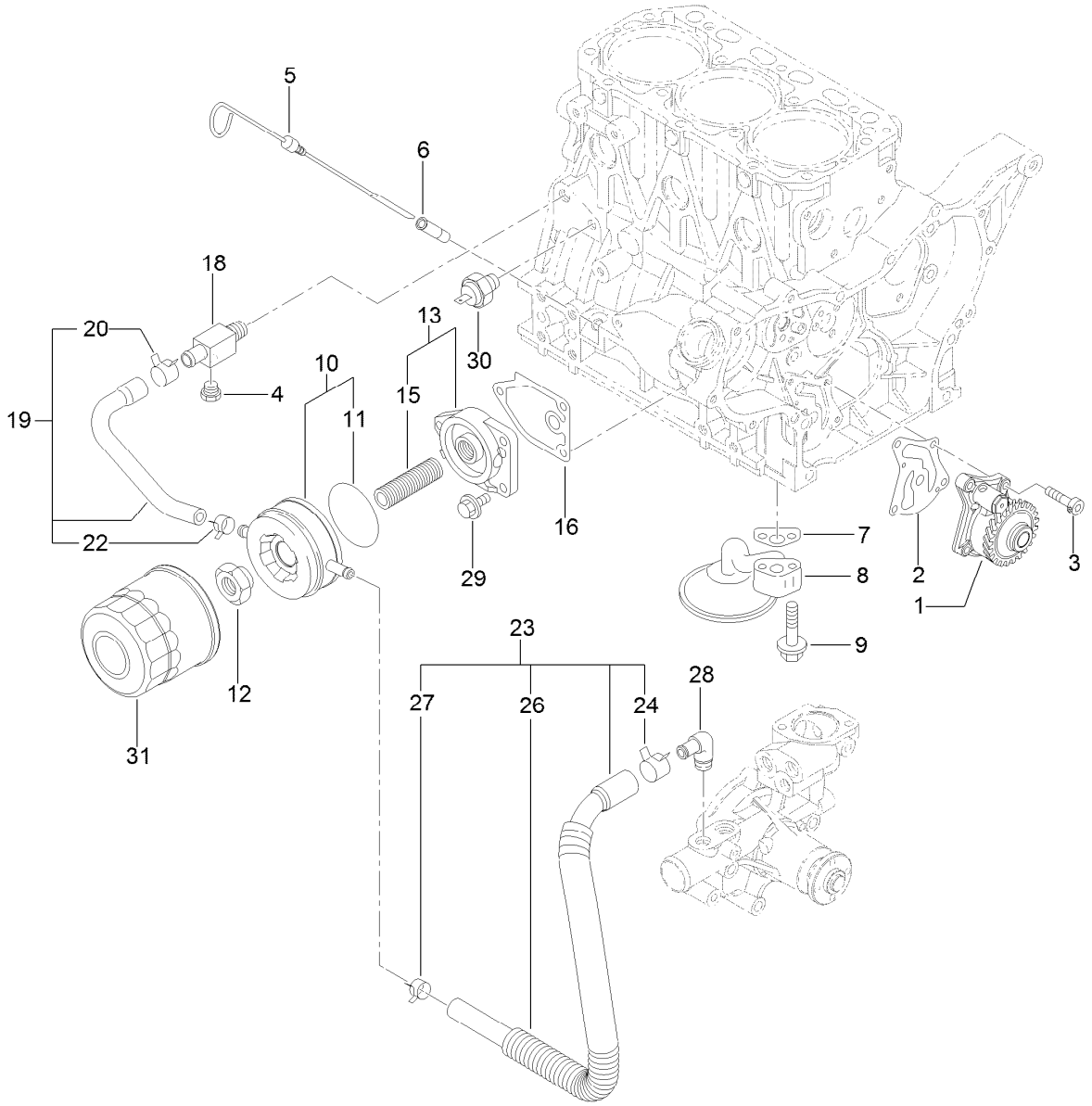

Lubrication and Oil System Assembly

Ref.	Part Number	Qty.	Description
1	127-4753	1	Oil Pump ASM
2	127-3004	1	Gasket
3	125-7232	4	Bolt
4	125-7171	1	Plug
5	125-6987	1	Dipstick
6	125-6954	1	Guide
7	125-7022	1	Gasket
8	127-3803	1	Pipe ASM
9	125-7217	2	Bolt
10	125-7074	1	Cooler ASM
11	125-7075	1	O-Ring
12	125-7041	1	Nut-Cooler, Oil
13	125-6989	1	Bracket ASM
15	125-7042	1	Stud

Ref.	Part Number	Qty.	Description
16	125-7024	1	Gasket
18	125-6990	1	Joint
19	125-7078	1	Pipe ASM
20	125-7162	1	Clip
22	125-7191	1	Clamp-Hose
23	127-3804	1	Pipe ASM
24	125-7162	1	Clip
26	127-3805	1	Tube
27	125-7191	1	Clamp-Hose
28	125-7001	1	Elbow
29	125-7595	3	Bolt
30	125-6918	1	Switch-Oil
31	125-7025	1	Filter

Cooling Water System Assembly

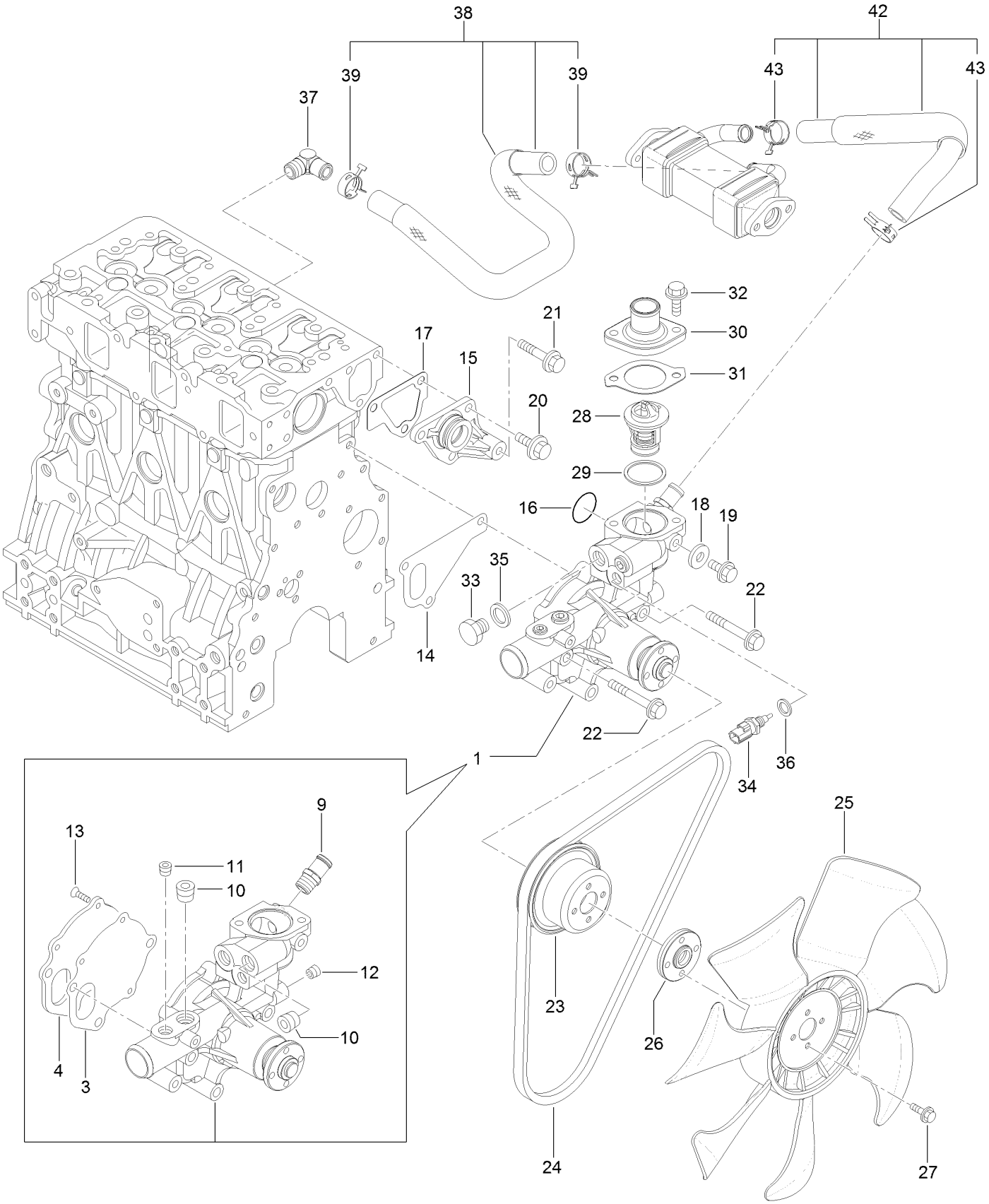

Cooling Water System Assembly (continued)

Ref.	Part Number	Qty.	Description
1	127-3071	1	Water Pump ASM
3	125-6998	1	Gasket
4	125-6999	1	Plate
9	127-3017	1	Joint
10	125-7123	2	Plug
11	127-3175	1	Plug
12	125-7195	1	Plug
13	125-7234	3	Screw
14	125-7047	1	Gasket
15	125-6986	1	Joint
16	125-7048	1	O-Ring
17	125-6978	1	Gasket
18	125-7192	1	Gasket
19	93-0362	1	Bolt
20	100-6928	3	Bolt
21	125-7219	1	Bolt
22	125-7222	3	Bolt
23	127-4712	1	V-Pulley
24	127-4771	1	V-Belt
25	127-4702	1	Fan
26	127-3810	1	Spacer
27	125-7209	4	Bolt
28	125-7029	1	Thermostat
29	125-7026	1	Gasket
30	125-7034	1	Cover
31	125-7110	1	Gasket
32	125-7594	2	Bolt
33	125-6953	1	Plug
34	125-7124	1	Sensor
35	125-6979	1	Gasket
36	125-7176	1	Washer-Seal
37	127-4705	1	Elbow
38	127-4757	1	E G R-C Pipe ASM
39	127-3020	2	Clamp-Hose
42	127-3811	1	CW Pipe ASM
43	127-3020	2	Clamp-Hose

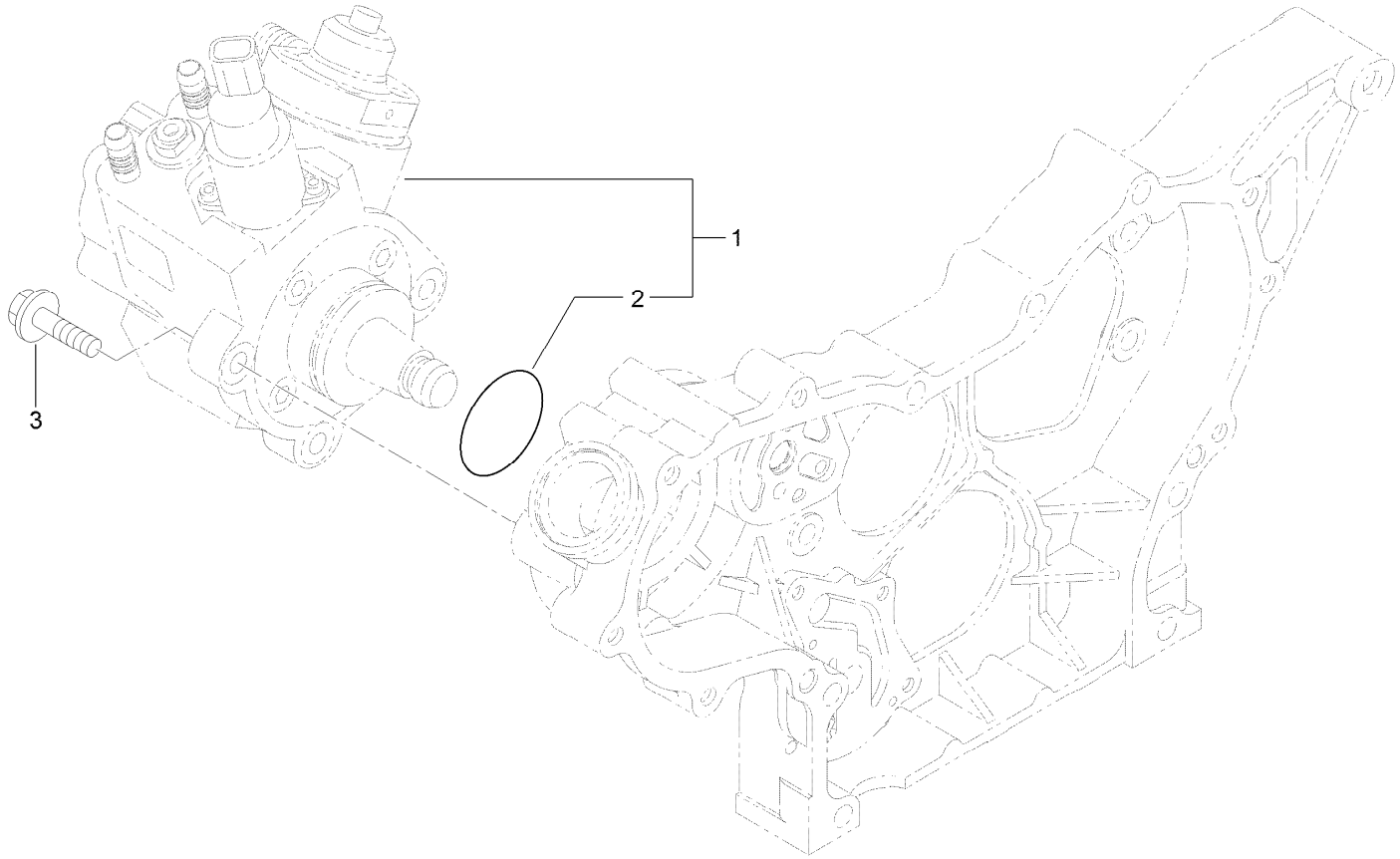

Fuel System Assembly

Ref.	*Part Number*	*Qty.*	*Description*
1	127-3073	1	Fuel Pump ASM
2	127-3074	1	O Ring-Pump, Fuel
3	125-7216	3	Bolt

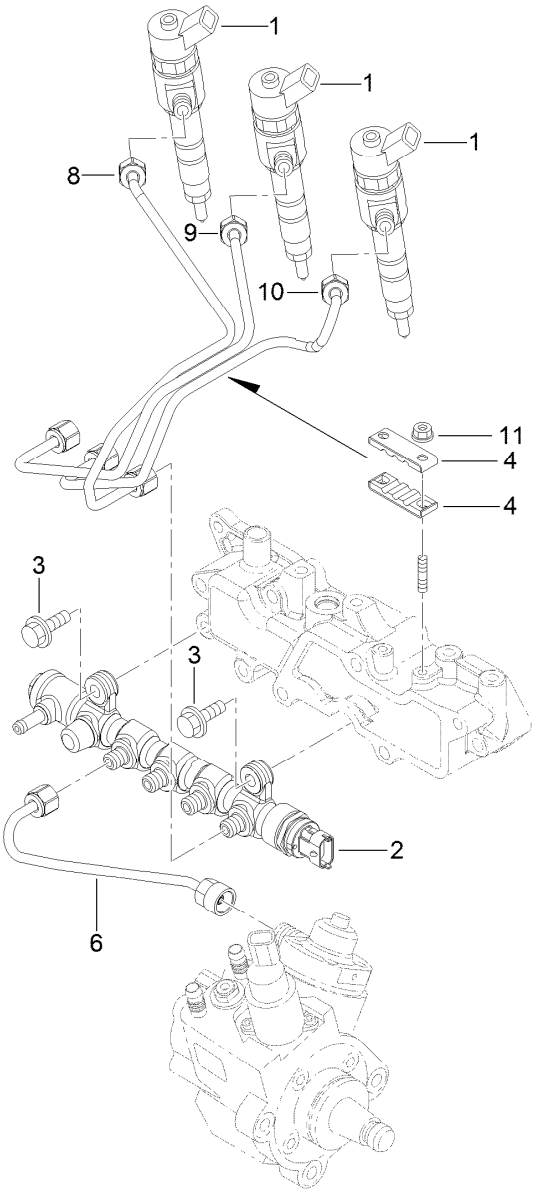

Fuel Injection Valve Assembly

Ref.	*Part Number*	*Qty.*	*Description*
1	127-4754	3	Injector ASM
2	127-3812	1	Rail ASM
3	125-7215	2	Bolt
4	127-3813	2	Retainer
6	127-3082	1	Rail In Pipe ASM
8	127-3814	1	Injection Pipe ASM
9	127-3083	1	Injection Pipe ASM
10	127-3084	1	Injection Pipe ASM
11	125-7231	2	Nut

Starting Motor Assembly

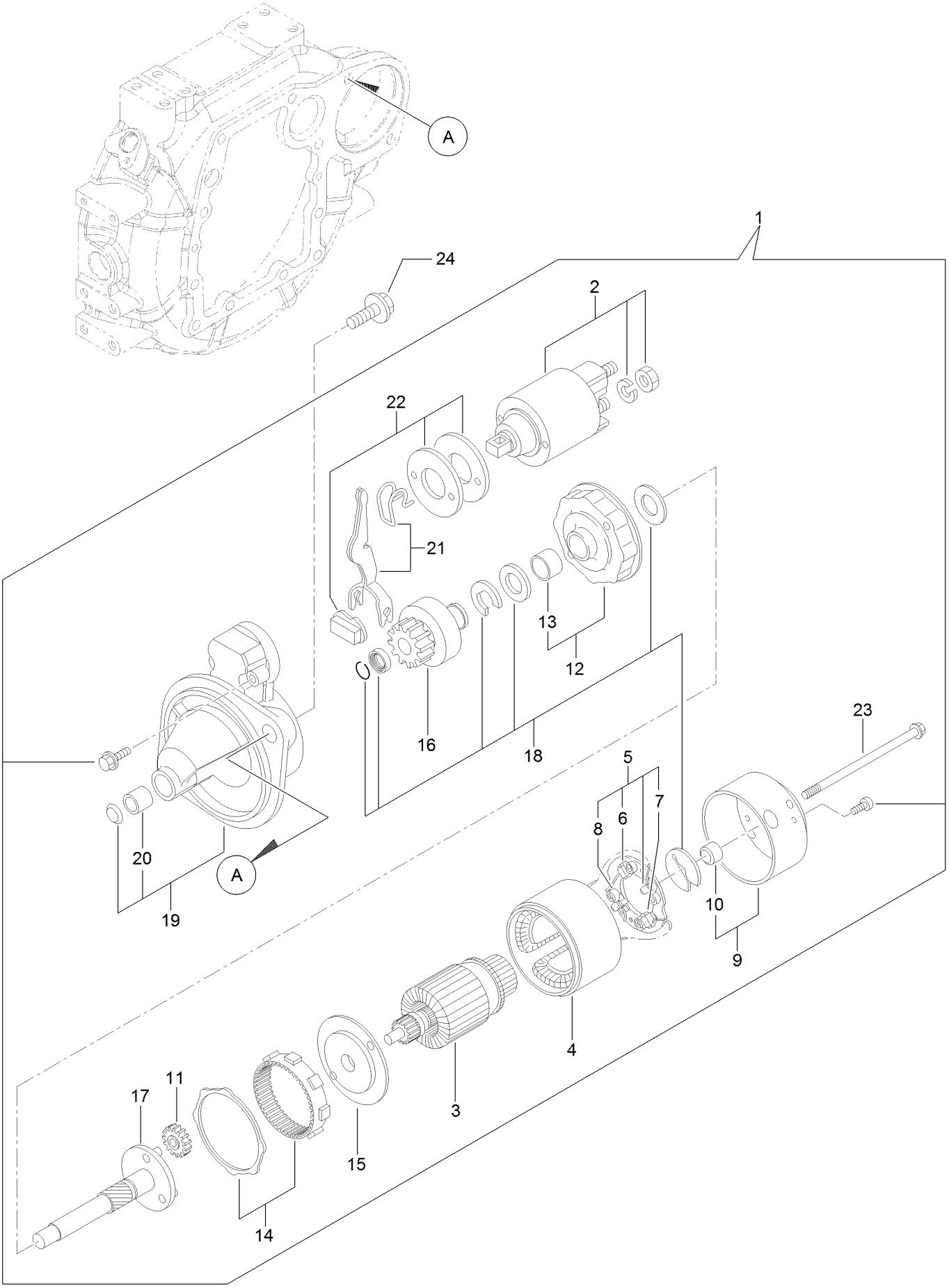

Starting Motor Assembly (continued)

Ref.	Part Number	Qty.	Description
1	127-3818	1	Starter ASM
2	127-3819	1	Switch ASM
3	127-3820	1	Armature ASM
4	127-3821	1	Yoke ASM
5	127-3822	1	Brush Holder ASM
6	127-3823	2	Brush
7	127-3824	1	Brush Set
8	127-3825	4	Spring
9	127-3826	1	Cover ASM
10	127-3827	1	Metal
11	127-3828	3	Gear
12	127-3829	1	Bracket
13	127-3830	1	Bracket
14	127-3831	1	Gear
15	127-3832	1	Bracket
16	127-3833	1	Pinion ASM
17	127-3834	1	Shaft
18	127-3835	1	Washer Set
19	127-3836	1	Case ASM
20	127-3837	1	Metal-Starter
21	127-3838	1	Lever Set
22	127-3839	1	Dust Cover ASM
23	127-3840	2	Bolt-Through
24	125-7225	2	Bolt

Generator Assembly

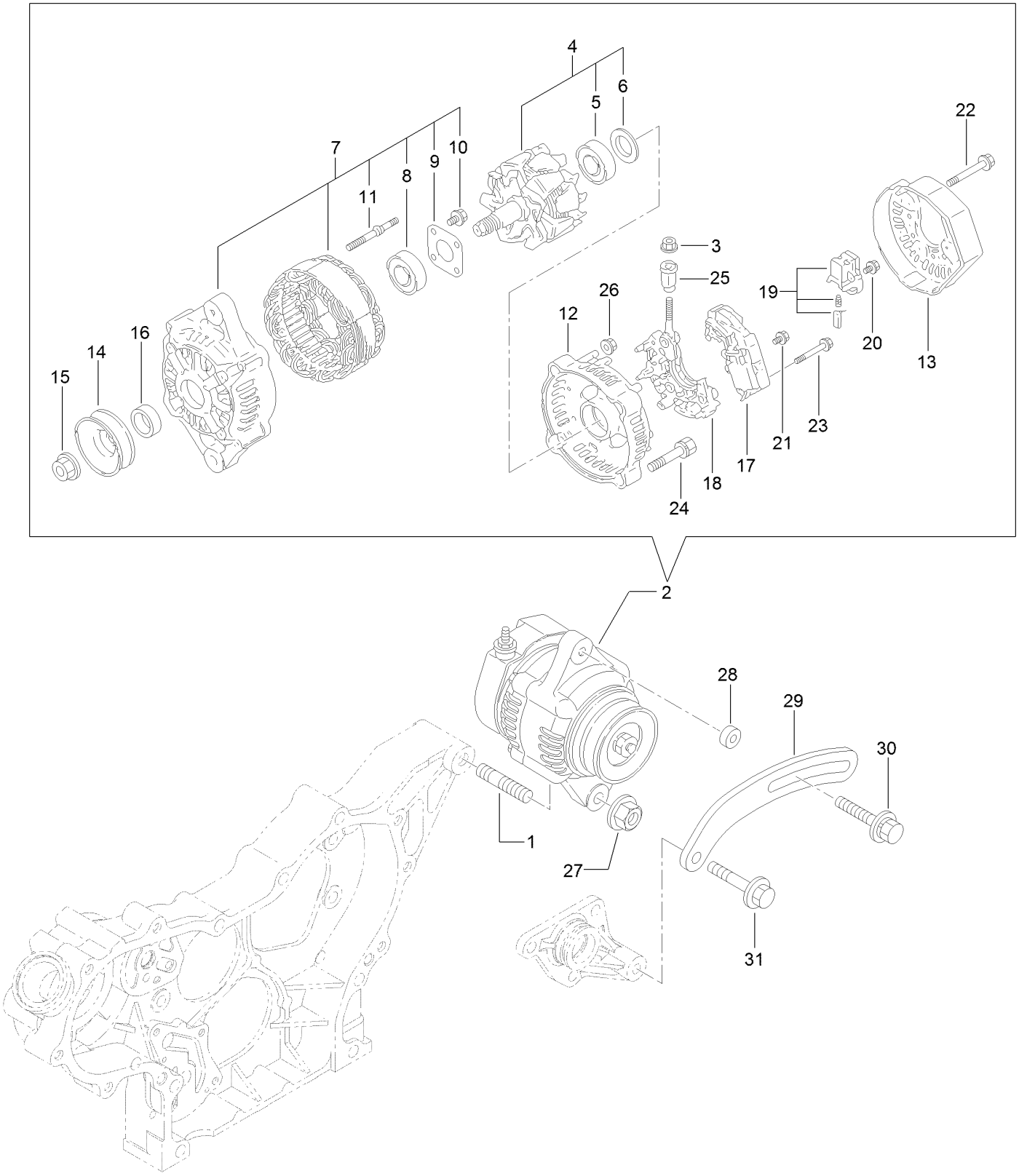

Generator Assembly (continued)

Ref.	Part Number	Qty.	Description
1	127-3011	1	Stud
2	127-3841	1	Generator
3	127-3190	1	Nut
4	127-3843	1	Rotor ASM
5	127-2983	1	Bearing-Ball
6	127-2962	1	Cover
7	127-3844	1	Frame ASM
8	127-2958	1	Bearing-Ball
9	127-2959	1	Plate-Retainer
10	127-2960	4	Screw
11	127-2961	2	Stud
12	127-3845	1	Frame
13	127-3846	1	Cover
14	127-2954	1	Pulley
15	127-2955	1	Nut
16	127-2957	1	Collar
17	127-3847	1	Regulator ASM
18	127-3848	1	Holder
19	127-2993	1	Holder
20	127-2965	6	Screw
21	127-2966	1	Screw
22	127-2967	3	Bolt
23	127-2968	2	Screw
24	127-2969	2	Bolt
25	127-2970	1	Bushing-Insulation
26	127-2971	2	Nut
27	125-7230	1	Nut
28	125-6947	1	Spacer
29	127-2977	1	Adjuster
30	125-7134	1	Bolt
31	125-7219	1	Bolt

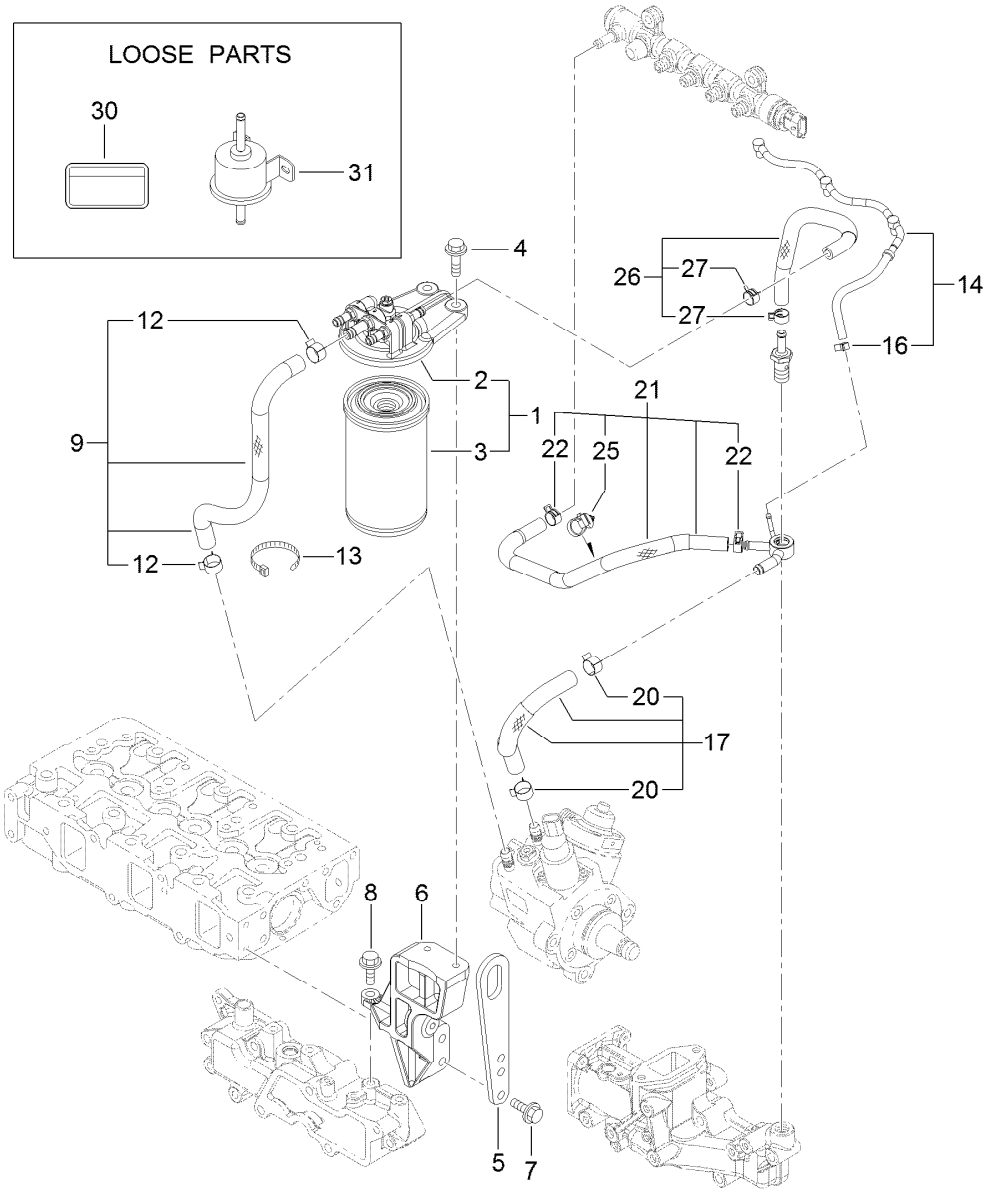

Fuel Line Assembly

Ref.	Part Number	Qty.	Description
1	127-3075	1	Filter ASM
2	127-3076	1	Bracket ASM
3	125-8752	1	Filter-Fuel
4	125-7216	2	Bolt
5	125-7111	1	Lifter
6	127-3815	1	Filter Bracket ASM
7	125-7215	2	Bolt
8	125-7215	1	Bolt
9	127-3077	1	Fuel Pipe ASM
12	125-7191	2	Clamp-Hose
13	127-2981	1	Band

Ref.	Part Number	Qty.	Description
14	127-3816	1	Fuel/Oil Return Pipe ASM
16	127-3172	1	Clamp-Hose
17	127-3078	1	Fuel Pipe ASM
20	125-7191	2	Clamp-Hose
21	127-3817	1	Fuel Pipe ASM
22	127-2950	2	Clip
25	127-3087	1	Band-Clip
26	127-3079	1	Fuel Pipe ASM
27	127-2950	2	Clip
30	125-6900	1	Label-Caution, Fuel Oil
31	127-3008	1	Pump-Feed, Fuel

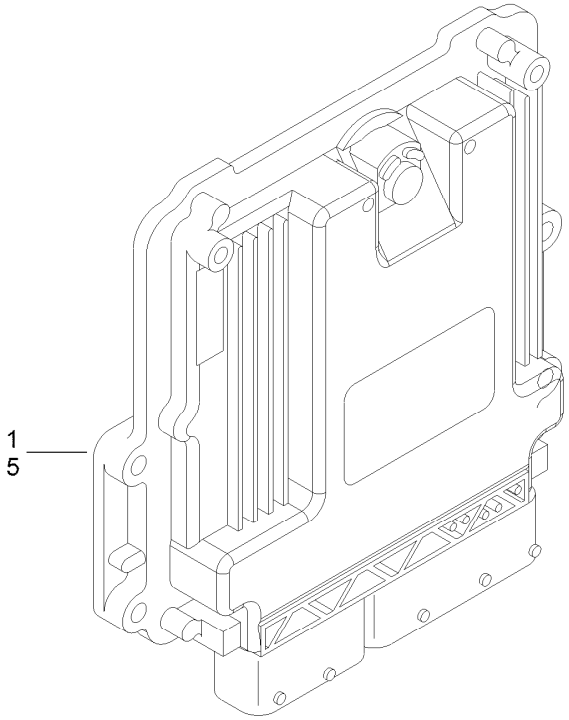

Electronic Control Unit Assembly

Ref.	Part Number	Qty.	Description
1	127-4763	1	E C U ASM
5	127-3085	1	E C U ASM

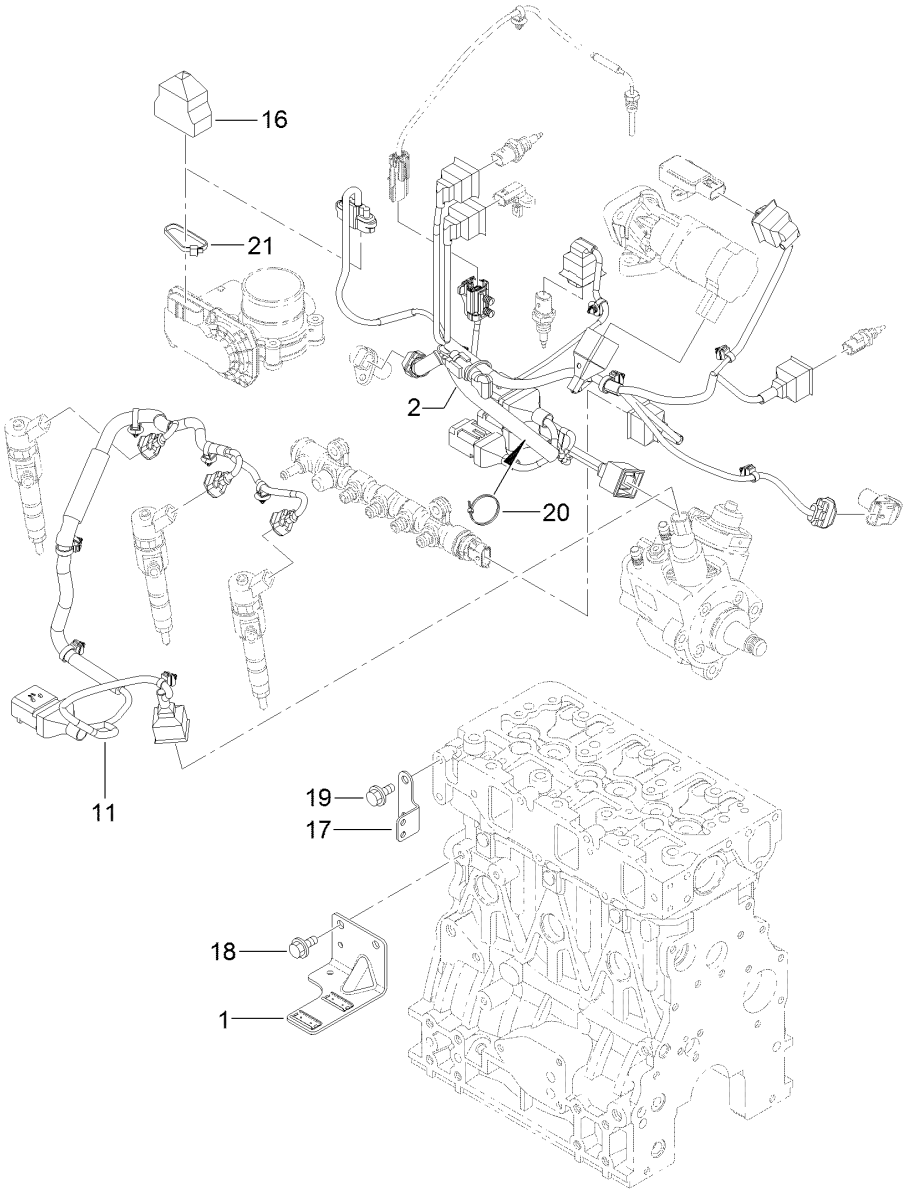

Electric Parts Assembly

Ref.	*Part Number*	*Qty.*	*Description*
1	127-3086	1	Bracket-Connector
2	127-4755	1	Harness
11	127-3851	1	Harness
16	127-3089	1	Boot-Type, Cap
17	127-3090	1	Bracket-Harness
18	93-0362	2	Bolt
19	93-0362	2	Bolt
20	127-3187	1	Band
21	127-3188	1	Band

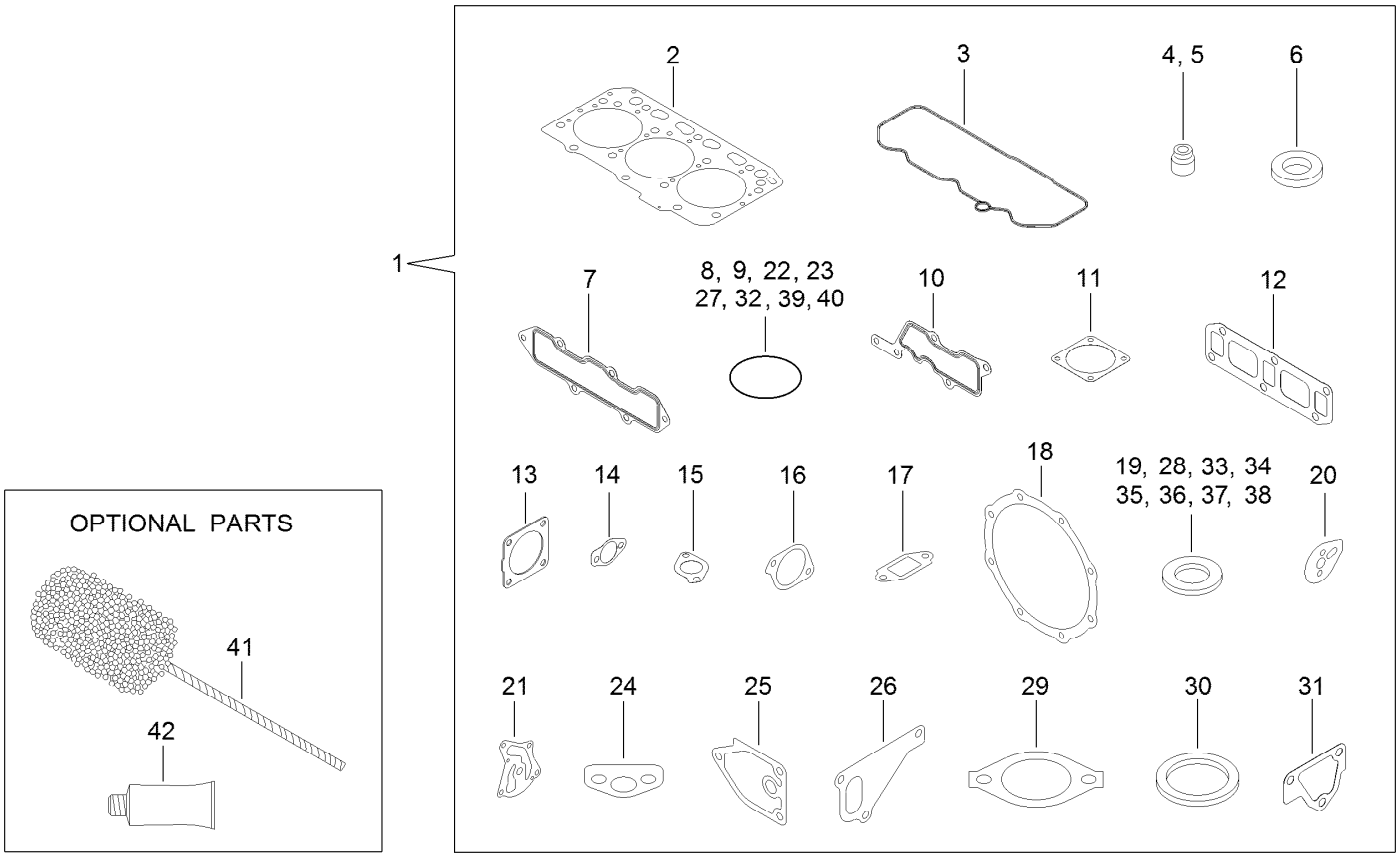

Gasket Set

Ref.	Part Number	Qty.	Description
1	127-4776	1	Gasket Kit
2	127-4716	1	Head Gasket ASM
3	127-3856	1	Gasket-Head, Cylinder
4	127-2986	3	Seal-Stem, Valve
5	127-3027	3	Seal-Stem, Valve
6	127-3021	3	Gasket-Injector
7	127-3857	1	Gasket-Manifold, Intake
8	127-3032	2	O-Ring
9	127-3033	1	O-Ring
10	127-3034	1	Gasket-Collector
11	127-3037	2	Gasket-Throttle
12	127-3775	1	Gasket-Manifold, Exhaust
13	127-2987	1	Gasket
14	127-3043	2	Gasket-Cooler, E G R
15	127-3016	1	Gasket
16	127-3050	1	Gasket-Intake Valve, E G R
17	127-3051	1	Gasket-Out Valve, E G R
18	127-3859	2	Gasket-D P F
19	127-3056	4	Gasket-Sensor
20	127-3069	1	Gasket-Idle, Shaft B
21	127-3004	1	Gasket

Ref.	Part Number	Qty.	Description
22	125-6909	2	O-Ring
23	127-2973	1	O-Ring
24	125-7022	1	Gasket
25	125-7024	1	Gasket
26	125-7047	1	Gasket
27	125-7048	1	O-Ring
28	125-6979	1	Gasket
29	125-7110	1	Gasket
30	125-7026	1	Gasket
31	125-6978	1	Gasket
32	127-3074	1	O Ring-Pump, Fuel
33	125-7174	1	Washer-Seal
34	125-7176	1	Washer-Seal
35	127-3166	2	Washer-Seal
36	125-7177	1	Washer-Seal
37	125-7192	1	Gasket
38	127-3174	2	Gasket
39	93-0418	3	O-Ring
40	125-7197	2	O-Ring
41	127-3000	1	Hone
42	125-7248	1	Gasket-Liquid

Attachments and Accessories

For 30695 Groundsmaster 7210 Series Traction Unit

Product Name	Model/Part
Auxiliary Hydraulic Power Kit	30380
Auxiliary Power Unit	30382
Debris Blower	30393
Tooth Rake	08751
Finish Grader	08754
Drag Mat Carrier System	08756
Steel Drag Mat	08757
Coco Drag Mat	08758
42-pound Weight, For Kit 114-4090	114-4096
Premium Transmission/Hydraulic Tractor Fluid (55 Gallon Drum)	108-1183
Premium Transmission/Hydraulic Tractor Fluid (5 Gallon Pail)	108-1184
Universal Sunshade	30349
Premium Engine Oil 15w40 (5 Gallon Pail)	121-6395
Premium Engine Oil 15w40 (55 Gallon Drum)	121-6394
Green Diesel Cap	107-2172
Yellow Hydraulic Cap	107-1576
5in Air Cleaner Safety Element	114-4057
Overflow Tank Kit	117-5570
Brake Service Kit	120-0015
Jack-Stand Kit	30483
Fender Kit	117-9170
Polar Trac Cab	30474
V-Plow Mounting Kit	30378
Polar Trac Kit	30675
48in V-Plow	30750
MVP Filter Kit	30261
Gasket-Cover, Housing	30810
Hitch Kit, Groundsmaster 7210 Series Traction Unit with Yanmar Engine	130-8718
Wheel and Tire ASM (Semi Pneumatic)	110-6406
Weight Mount Bracket Kit	114-4090
Weight Bracket Kit	125-2670
Tire-Lug (24 X 12 - 12)	103-6771
Slow Moving Vehicle Kit	114-4050
North American Road Light Kit	30374
Recycler Kit, 60in Side Discharge Deck	30348
CE Kit, Grass Collection System	117-9249
60in Side Discharge Mower	30456
Baffle, Blower Housing	30658
Blade-Belt Kit	105-7270
62in Rear Discharge Completion Kit	30463
62in Guardian Recycler Completion Kit	30306
62in Rotary Mower	30457
62in CE Mower Cover Kit	30683
Blade-Belt Kit, 72in Guardian Only	105-7271
72in Rear Discharge Completion Kit	30466
72in Guardian Recycler Completion Kit	30304

Attachments and Accessories (continued)

72in Guardian Fine Recycler Completion Kit 30346
72in Base Deck..... 30353
72in Guardian and Rear Discharge CE Mower Cover Kit 30685
Leaf Mulching Kit 108-5273
Recycler Kit, 72in Side Discharge Deck..... 30347
Striping Kit 105-7273
72in Side Discharge Deck..... 30481
72in Side Discharge Mower (CE)..... 30354
CE Kit, 72in Side Deck With French Guards 30679
100in Rear Discharge Deck 31101
Adapter Kit for 100in Rear Discharge Deck.....31104
Leaf Mulching Kit for 100in Rear Discharge Deck 31105
100in CE Mower Cover Kit..... 30687

TORO®

Count on it.