Form No. 3397-146 Rev A

TORO®

Count on it.

Parts Catalog

# Groundsmaster® 7200 Series

## Traction Unit

**Model No. 30495—Serial No. 315000501 and Up**

Register at www.Toro.com.
Original Instructions (EN)

CE

*3397-146* A

# Ordering Replacement Parts

To order replacement parts, please supply the part number, the quantity, and the description of each part desired.

**Understanding Reference Numbers**

Each identified part in an illustration has a reference number. The reference number for a part also appears in the parts list, along with other information about the part.

This catalog uses two special reference number formats, one to indicate parts in a service assembly and another to indicate the quantity of a given part in an illustration.

**Service Assembly Reference Numbers**

Parts in service assemblies have reference numbers in the form a:b. The a represents the reference number of the entire service assembly and the b represents a sequential number unique to each part within the service assembly.

For example, a wheel assembly might be identified by reference number 6, the tire by 6:1, the valve by 6:2, and the wheel by 6:3. When you order the assembly identified by reference number 6, you receive all parts identified by reference numbers 6:1,6:2, and 6:3. However, you may also order any part individually. Reference numbers of this type appear in illustration and in parts lists.

**Reference Numbers Indicating Quantity**

In an illustration, if a reference number indicates more than one part, the reference number has the form nX y. The n represents the quantity of the part, the X is the multiplication symbol, and the y represents the reference number.

For example, in an illustration, the reference number 2X 37 means that two of the parts identified by reference number 37 are indicated.

# List of Abbreviations

**AR:** as required

**ASM:** assembly

**BBC:** blade brake control

**BHTF:** button head thread forming

**CARR:** carriage

**CCW:** counter clockwise

**CW:** clockwise

**DEG:** degrees

**DPA:** Dual Point Adjustment

**ECM:** electronic control module

**EXT:** external

**FH:** flat head

**GA:** gauge

**HD:** heavy-duty

**HF:** hex flange

**HH:** hex head

**HHF:** hex head flange

**HHFTF:** hex head flange thread forming

**HJ:** hex jam

**HLH:** hex lag head

**HOC:** height-of-cut

**HP:** high pressure

**HSBH:** hex socket button head

**HSFH:** hex socket flat head

**HSH:** hex socket head

**HWH:** hex washer head

**HWHTF:** hex washer head thread forming

**HYD:** hydraulic

**LH:** left hand

**LP:** low pressure

**LPG:** Liquefied Petroleum Gas

**NI:** nylon insert

**NPTF:** national pipe thread fine

**PFH:** phillips flat head

**PPH:** phillips pan head

**PPHTF:** phillips pan head thread forming

**PRH:** phillips round head

**PTH:** phillips truss head

**PTO:** power-take-off

**RH:** right hand

**ROPS:** roll-over protection system

**RRB:** rear roller brush

**SFH:** slotted fillister head

**SHH:** slotted hex head

**SHWH:** slotted hex washer head

**SPH:** slotted pan head

**SQH:** square head

**SRH:** slotted round head

**STD:** standard

**TAP:** self tapping

**TTH:** torx truss head

# Contents

Rear Frame Assembly . . . 5
Engine Assembly . . . 6
Transmission and Gear Pump Assembly . . . 7
Charge Pump Housing Assembly Transmission Assembly No. 131-5510 . . . 8
Center Section Assembly Transmission Assembly No. 131-5510 . . . 10
Gear Case and Clutch Assembly Transmission Assembly No. 131-5510 . . . 12
Driveshaft Assembly No. 110-3575 . . . 14
Hydraulic Gear Pump Assembly No. 112-9542 . . . 15
Rear Drive Assembly . . . 16
Hydraulic Motor Assembly No. 108-5155 . . . 17
Hydraulic Motor Assembly No. 108-5230 . . . 18
LH Brake Caliper Assembly No. 120-0013 . . . 19
RH Brake Caliper Assembly No. 120-0014 . . . 20
Brake Handle Assembly . . . 21
Radiator and Oil Cooler Assembly . . . 22
Traction Control Assembly . . . 23
Link Assembly No. 112-5099 . . . 24
RH Lever Assembly No. 125-2687 . . . 25
Control Panel Assembly . . . 26
Left-Hand and Right-Hand Fuel Tank Assembly . . . 27
LH Fuel Tank Assembly No. 110-8230 . . . 28
RH Fuel Tank Assembly No. 110-8236 . . . 29
Fuel Filter / Separator Assembly . . . 30
Hood and Screen Assembly . . . 31
Seat and Seat Plate Assembly . . . 32
Seat Assembly No. 107-2286 . . . 33
Floorplate and Carrier Frame Assembly . . . 34
Carrier Frame Assembly No. 121-3356 . . . 35
Lift Valve and Cylinder Assembly . . . 36
Valve Assembly No. 131-1934 . . . 37
Hydraulic Cylinder Assembly No. 110-9834 . . . 38
Caster Wheel Assembly . . . 39
Caster Wheel Assembly No. 108-9954 . . . 40
Deck Lift Assembly . . . 41
Electrical Assembly . . . 42
Transmission and Oil Cooler Hydraulic Assembly . . . 43
Hydraulic Reservoir Assembly . . . 44
Hydraulic Reservoir Assembly No. 110-8237 . . . 45
Air Cleaner and Hose Assembly . . . 46
Air Cleaner Assembly No. 104-3428 . . . 47
Crankcase Assembly . . . 48
Oil Pan and Dipstick Assembly . . . 49
Cylinder Head Assembly . . . 50
Gear Case and Oil Filter Cartridge Assembly . . . 51
Cylinder Head Cover Assembly . . . 52
Main Bearing Case Assembly . . . 53
Camshaft and Idle Gear Shaft Assembly . . . 54
Piston and Crankshaft Assembly . . . 55
Fuel Camshaft and Governor Shaft Assembly . . . 56
Idle Apparatus Assembly . . . 57
Injection Pump Assembly . . . 58
Governor Assembly . . . 59
Speed Control Plate Assembly . . . 60
Nozzle Holder and Glow Plug Assembly . . . 61

**© 2015—The Toro® Company**
**8111 Lyndale Avenue South**
**Bloomington, MN 55420**



**Contact us at www.Toro.com.**
**Printed in the USA.**
**All Rights Reserved**

# Contents (continued)

Nozzle Holder Assembly . . . 62
Alternator, Pulley and Fan Assembly . . . 63
Alternator Components Assembly . . . 64
Starter and Flywheel Assembly . . . 65
Starter Component Assembly . . . 66
Water Flange and Thermostat Assembly . . . 67
Water Pump Assembly . . . 68
Valve and Rocker Arm Assembly . . . 69
Inlet and Exhaust Manifold Assembly . . . 70
Miscellaneous Engine Parts . . . 71
Upper Engine Gasket Kit . . . 72
Lower Engine Gasket Kit . . . 73
Attachments and Accessories . . . 74

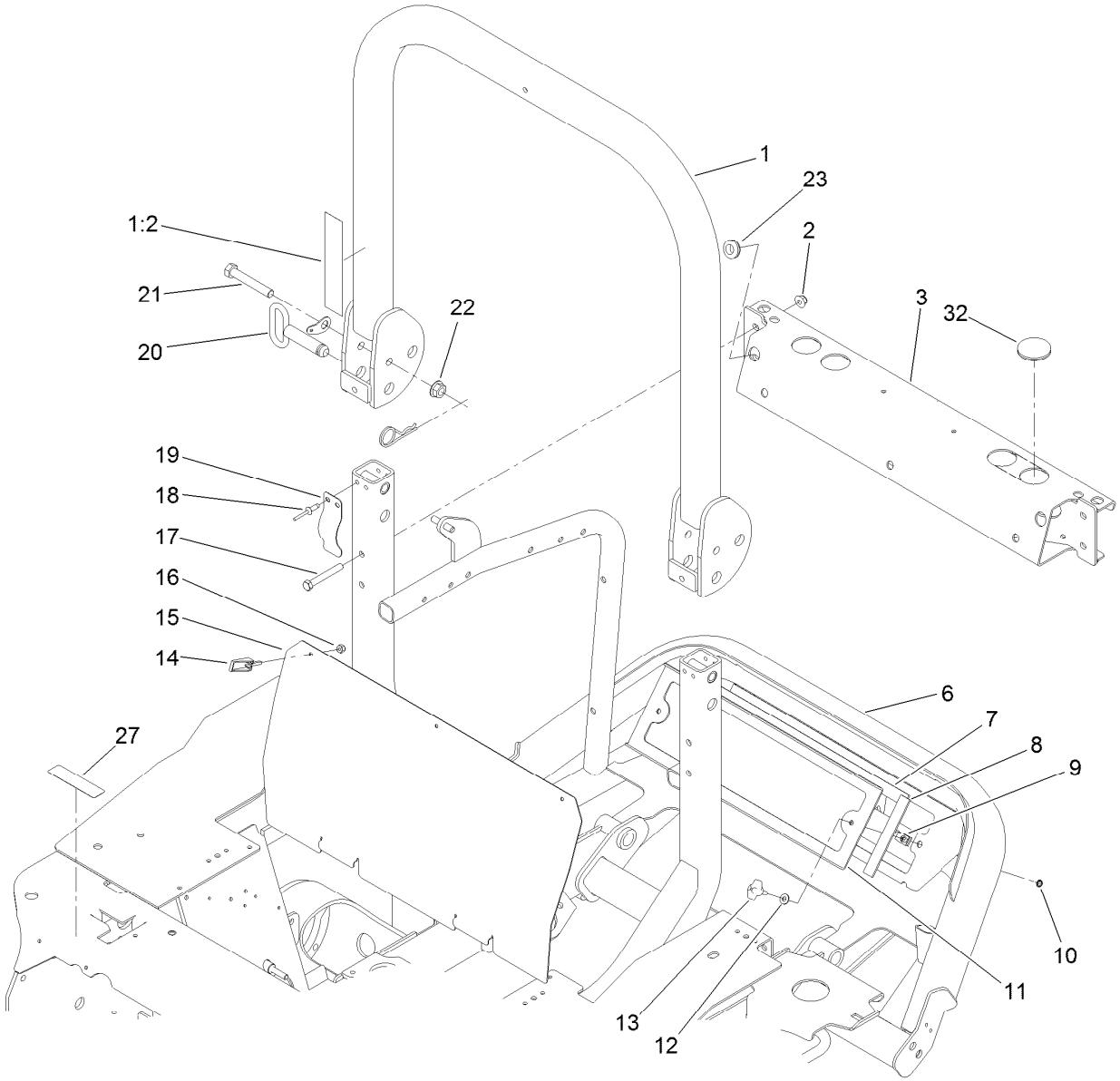


# Rear Frame Assembly

| Ref. | Part Number | Qty. | Description |
|---|---|---|---|
| 1 | 110-9770 | 1 | Upper ROPS ASM |
| 1:2 | 107-3069 | 1 | Decal-Warning, Folding ROPS |
| 2 | 104-8301 | 4 | Nut-Flange, NI |
| 3 | 130-5996-03 | 1 | Crossmember ASM |
| 6 | 125-2714-03 | 1 | Frame-Rear |
| 7 | 120-0019 | 2 | Strip-Foam |
| 8 | 120-0017 | 2 | Strip-Foam |
| 9 | 107069 | 2 | Clip |
| 10 | 32151-106 | 2 | Ring-Retaining |
| 11 | 112-6384-03 | 1 | Screen |
| 12 | 3256-22 | 2 | Washer-Flat |
| 13 | 98-8332 | 2 | Knob |

| Ref. | Part Number | Qty. | Description |
|---|---|---|---|
| 14 | 74-5950 | 3 | Latch-Swell |
| 15 | 125-2718-03 | 1 | Panel-Rear |
| 16 | 1-804254 | 3 | Nut-Lock, HH |
| 17 | 323-13 | 4 | Screw-HH |
| 18 | 3290-412 | 4 | Rivet |
| 19 | 110-5696 | 2 | Spring-Leaf |
| 20 | 103-4553 | 2 | Pin-Fold, ROPS |
| 21 | 112-7264 | 2 | Screw-HH |
| 22 | 32128-23 | 2 | Nut-HF |
| 23 | 237-124 | 2 | Grommet |
| 27 | 117-2718 | 1 | Decal-Arrester, Spark |
| 32 | 105-5761 | 4 | Grommet |

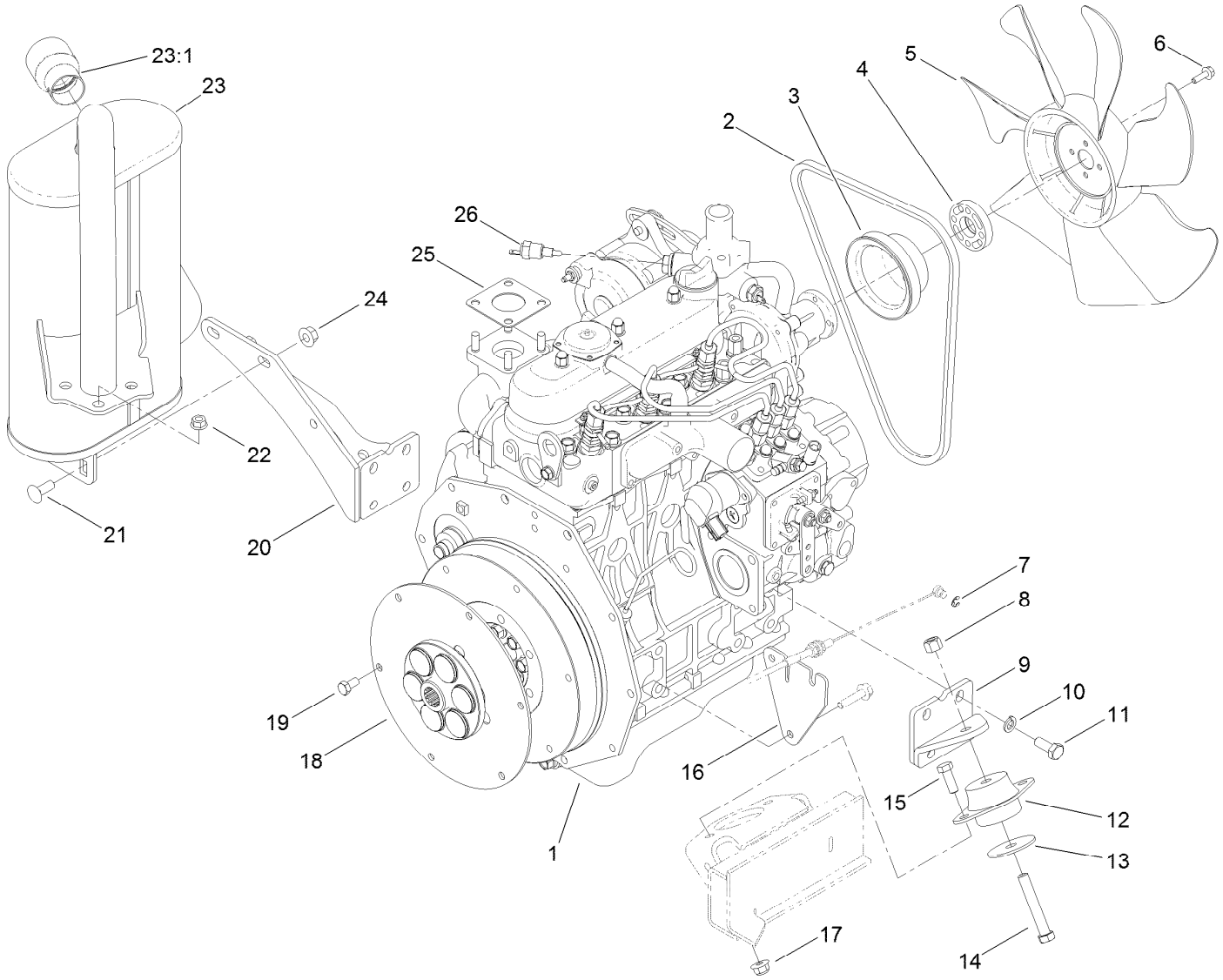


# Engine Assembly

| Ref. | Part Number | Qty. | Description |
|---|---|---|---|
| 1 | 127-9661 | 1 | Engine-Kubota, D1105 Dsl |
| 2 | 98-9676 | 1 | V-Belt |
| 3 | 98-9584 | 1 | Pulley-Fan |
| 4 | 108-2872 | 1 | Collar-Fan |
| 5 | 104-4246 | 1 | Fan-Engine |
| 6 | 33103-020 | 4 | Screw-HHF |
| 7 | 701197 | 1 | E-Ring |
| 8 | 3296-48 | 2 | Nut-Lock, NI |
| 9 | 105-7235-03 | 1 | Mount-Rear |
| 10 | 48-9590 | 8 | Washer-Lock |
| 11 | 43-0090 | 8 | Screw-HH |
| 12 | 53-9681 | 2 | Mount-Engine |
| 13 | 87-5100 | 2 | Washer-Snubbing |
| 14 | 324-11 | 2 | Screw-HH |

| Ref. | Part Number | Qty. | Description |
|---|---|---|---|
| 15 | 323-6 | 4 | Screw-HH |
| 16 | 114-4060 | 1 | Bracket-Throttle |
| 17 | 104-8301 | 4 | Nut-Flange, NI |
| 18 | 110-9729 | 1 | Coupling-Flywheel |
| 19 | 99-5132 | 6 | Bolt |
| 20 | 108-9926-03 | 1 | Bracket-Muffler |
| 21 | 3231-22 | 2 | Screw-CARR |
| 22 | 33004-00 | 4 | Nut-HF |
| 23 | 105-7230 | 1 | Muffler |
| 23:1 | 112-1688 | 1 | Spark Arrestor Kit |
| 24 | 32128-29 | 2 | Nut-Lock, Flange |
| 25 | 99-8343 | 1 | Gasket-Muffler |
| 26 | 98-9719 | 1 | Thermoswitch |

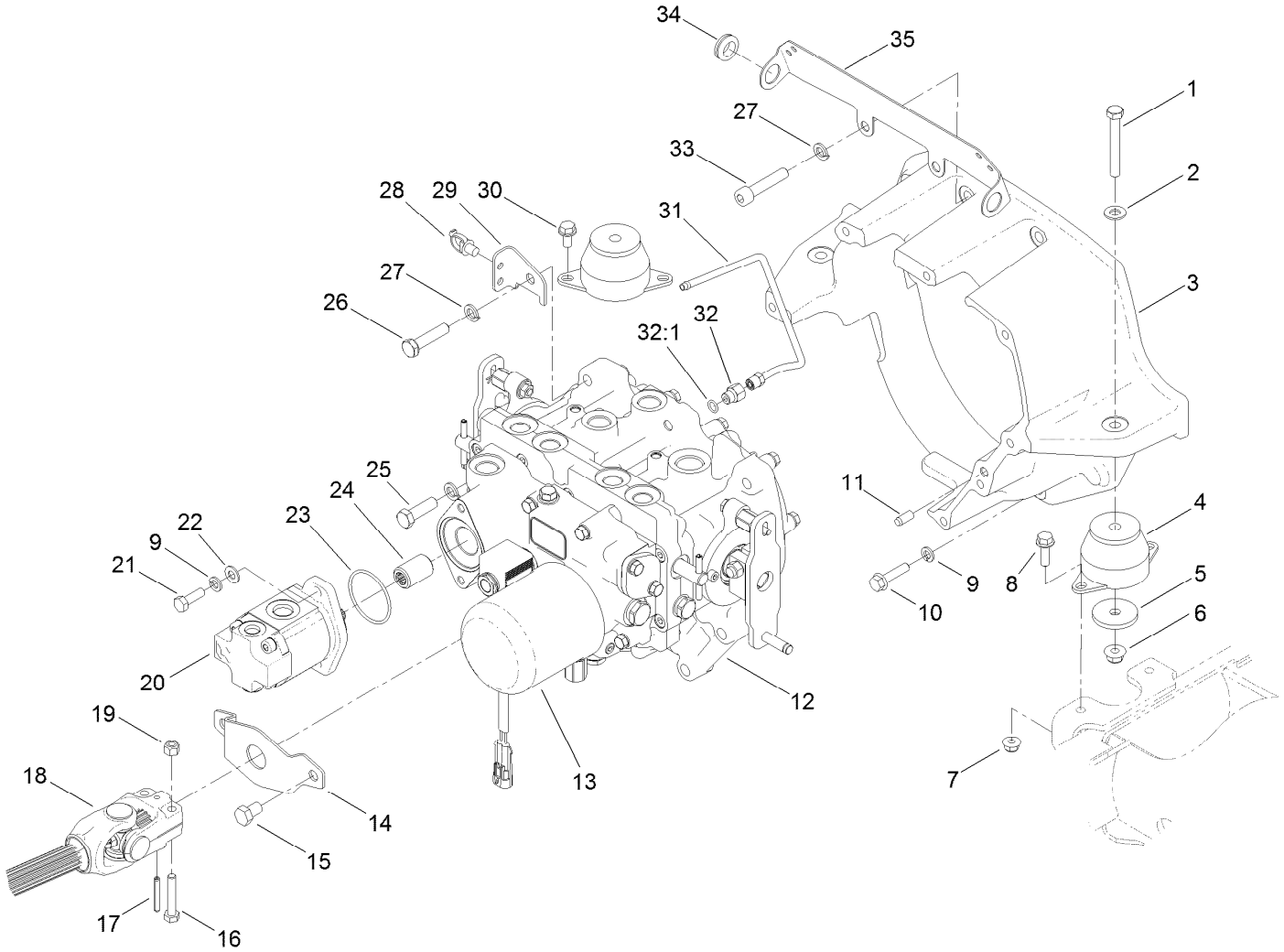


# Transmission and Gear Pump Assembly

| Ref. | Part Number | Qty. | Description |
|---|---|---|---|
| 1 | 323-13 | 2 | Screw-HH |
| 2 | 3256-24 | 2 | Washer-Flat |
| 3 | 108-5193 | 1 | Housing-Flywheel |
| 4 | 107-2289 | 2 | Mount-Motor |
| 5 | 80-8560 | 2 | Washer-Hardened |
| 6 | 104-8301 | 2 | Nut-Flange, NI |
| 7 | 104-8300 | 2 | Nut-Flange, NI |
| 8 | 3234-17 | 2 | Screw-HHF |
| 9 | 3253-4 | 10 | Washer-Lock |
| 10 | 33104-035 | 8 | Screw-HHF |
| 11 | 87-1910 | 4 | Pin-Dowel |
| 12 | 131-5510 | 1 | Transmisson ASM |
| 13 | 108-5194 | 1 | Filter-Oil, HYD |
| 14 | 114-4088 | 1 | Shield-Seal |
| 15 | 33115-016 | 2 | Screw-HH |
| 16 | 322-9 | 4 | Screw-HH |
| 17 | 32121-34 | 2 | Pin-Roll |
| 18 | 110-3575 | 1 | Driveshaft ASM |

| Ref. | Part Number | Qty. | Description |
|---|---|---|---|
| 19 | 3296-29 | 4 | Nut-Lock, NI |
| 20 | 112-9542 | 1 | HYD Gear Pump ASM |
| 21 | 33114-025 | 2 | Screw-HH |
| 22 | 3256-23 | 2 | Washer-Flat |
| 23 | 108-9919 | 1 | O-Ring |
| 24 | 108-9920 | 1 | Coupler-Spline |
| 25 | 33115-035 | 1 | Screw-HH |
| 26 | 33115-045 | 6 | Screw-HH |
| 27 | 48-9590 | 9 | Washer-Lock |
| 28 | 32180-030 | 1 | Clip-Tie |
| 29 | 120-0239 | 1 | Support-Tube |
| 30 | 32144-14 | 2 | Screw-HWHTF |
| 31 | 110-5537 | 1 | Tube |
| 32 | 110-5536 | 1 | Fitting-HYD, Adapter |
| 32:1 | 237-78 | 1 | O-Ring |
| 33 | 3274-106 | 2 | Screw-HSH |
| 34 | 99-3481 | 2 | Grommet |
| 35 | 125-2716-03 | 1 | Bracket-Wire |

# Charge Pump Housing Assembly
# Transmission Assembly No. 131-5510

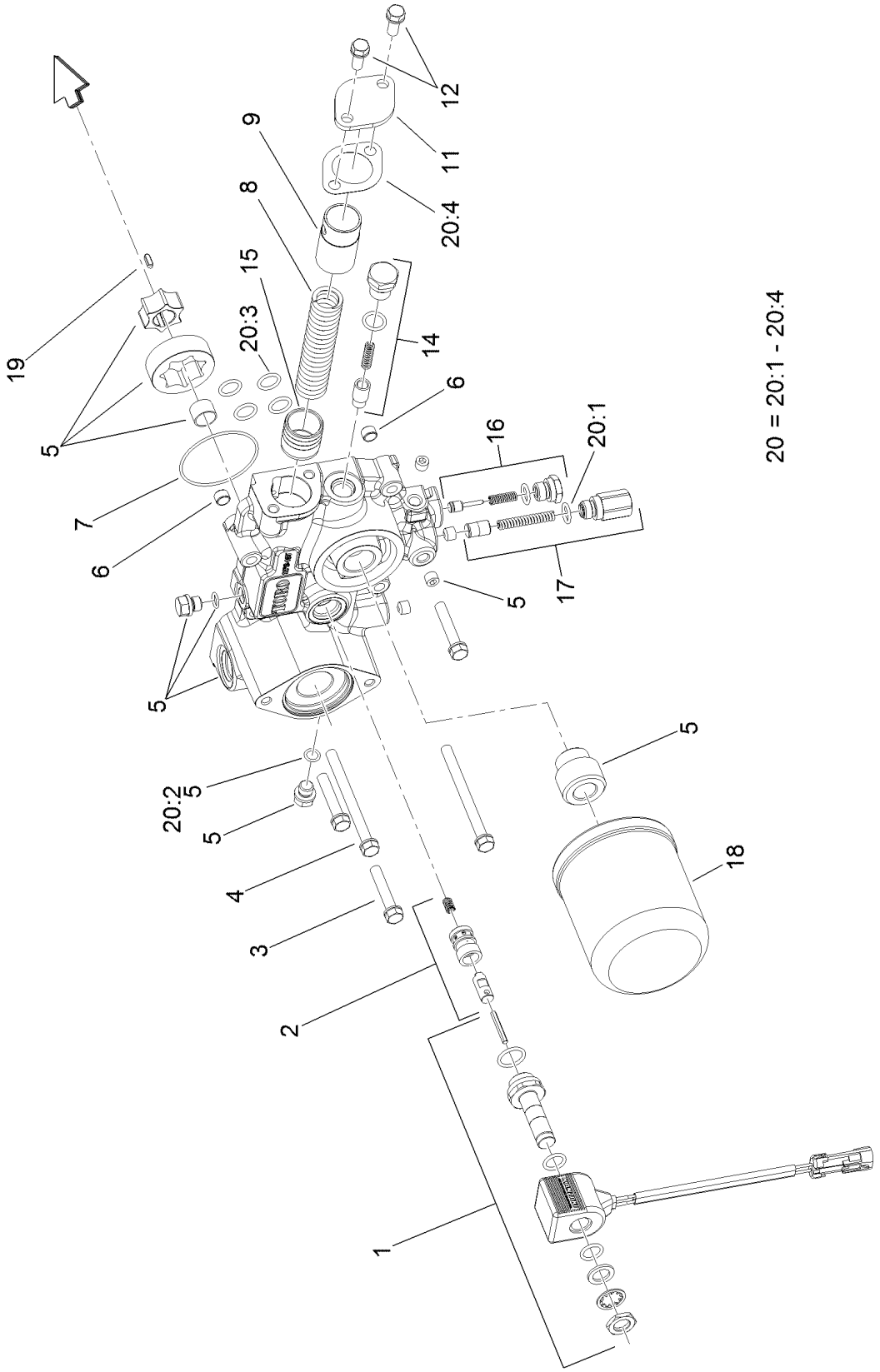

# Charge Pump Housing Assembly
# Transmission Assembly No. 131-5510 (continued)

| Ref. | Part Number | Qty. | Description |
|---|---|---|---|
| 1 | 107-0851 | 1 | Solenoid ASM |
| 2 | 107-0850 | 1 | Solenoid Valve ASM |
| 3 | 107-0863 | 3 | Bolt |
| 4 | 107-0864 | 2 | Bolt |
| 5 | 107-0840 | 1 | Pump Body ASM |
| 6 | 107-0848 | 2 | Pin |
| 7 | 107-0856 | 1 | O-Ring |
| 8 | 107-0845 | 1 | Spring |
| 9 | 107-0844 | 1 | Collar |
| 11 | 107-0846 | 1 | Cover |
| 12 | 93-0457 | 2 | Bolt And Washer ASM |

| Ref. | Part Number | Qty. | Description |
|---|---|---|---|
| 14 | 107-0843 | 1 | Filter Bypass Valve ASM |
| 15 | 107-0818 | 1 | Piston |
| 16 | 107-0842 | 1 | Charge Relief Valve ASM |
| 17 | 107-0841 | 1 | Pressure Valve ASM |
| 18 | 108-5194 | 1 | Filter-Oil, HYD |
| 19 | 107-0865 | 1 | Key |
| 20 | 107-0855 | 1 | Charge Pump Seal Kit |
| 20:1 | 93-0418 | 2 | O-Ring |
| 20:2 | 107-0817 | 2 | O Ring-Plug |
| 20:3 | 104-3298 | 6 | Packing |
| 20:4 | 107-0847 | 1 | Gasket |

# Center Section Assembly
# Transmission Assembly No. 131-5510

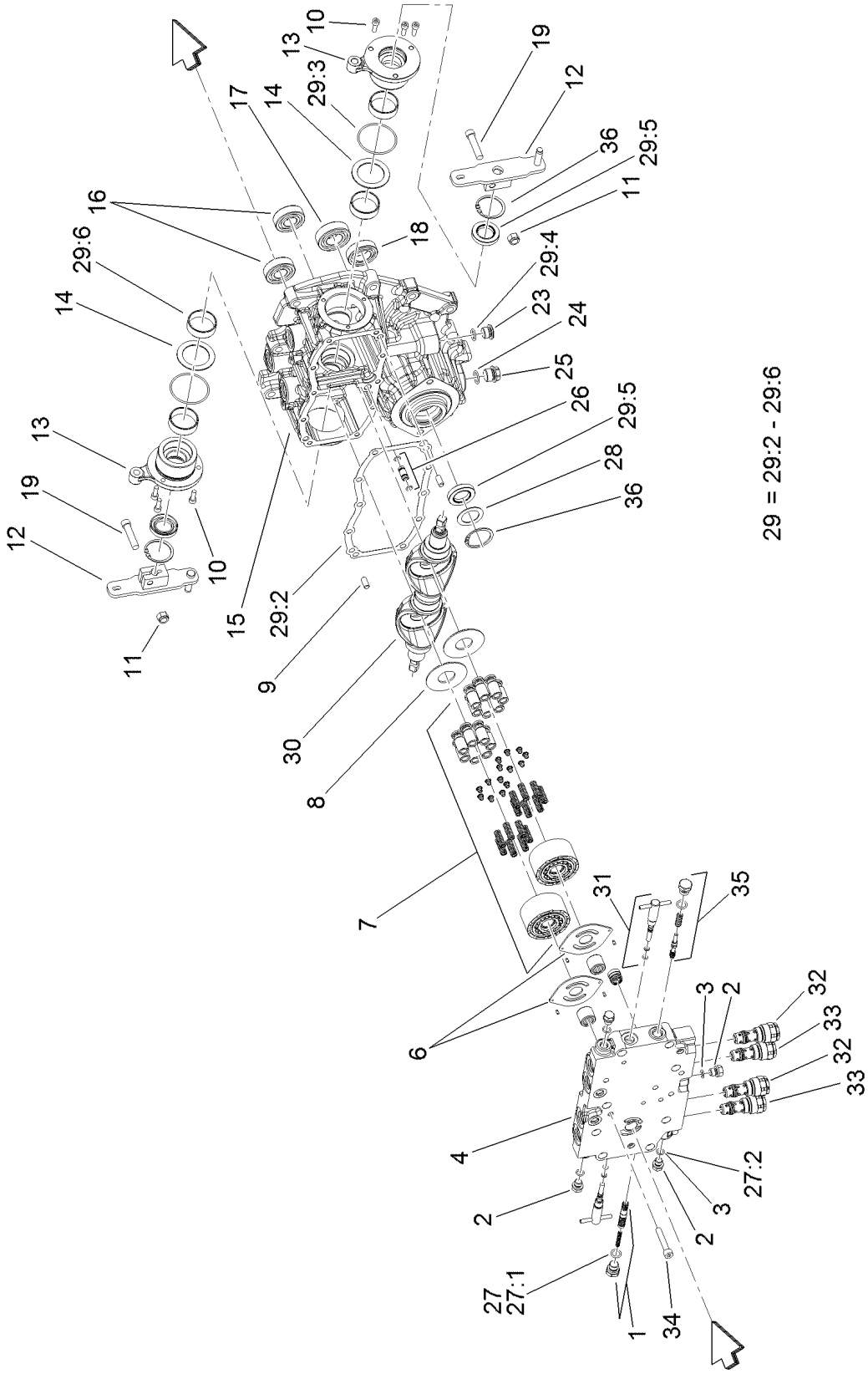

# Center Section Assembly
# Transmission Assembly No. 131-5510 (continued)

| Ref. | Part Number | Qty. | Description |
|---|---|---|---|
| 1 | 107-0807 | 1 | Valve-Flushing, RH |
| 2 | 107-0857 | 6 | Plug |
| 3 | 107-0817 | 6 | O Ring-Plug |
| 4 | 121-3377 | 1 | Center Case, Complete |
| 6 | 107-0805 | 2 | Plate-Valve |
| 7 | 107-0824 | 2 | Cylinder Block ASM |
| 8 | 107-0830 | 2 | Plate-Thrust |
| 9 | 92-0765 | 4 | Pin-Parallel |
| 10 | 107-0859 | 6 | Bolt |
| 11 | 120-6681 | 2 | U-Nut |
| 12 | 120-6680 | 2 | Arm-Control |
| 13 | 107-0832 | 2 | Side Cover ASM |
| 14 | 107-0829 | 2 | Washer |
| 15 | 120-5151 | 1 | Pump Housing ASM |
| 16 | 107-0826 | 2 | Bearing |
| 17 | 107-0821 | 1 | Bearing |
| 18 | 107-0838 | 1 | Bearing |
| 19 | 120-6682 | 2 | Bolt |
| 23 | 107-0861 | 1 | Plug-NPTF |
| 24 | 237-79 | 1 | O-Ring |
| 25 | 107-0867 | 1 | Plug |
| 26 | 107-0812 | 1 | Pipe |
| 27 | 107-0852 | 1 | Center Case Seal Kit |
| 27:1 | 93-0418 | 2 | O-Ring |
| 27:2 | 107-0817 | 6 | O Ring-Plug |
| 28 | 107-0813 | 1 | Spacer |
| 29 | 107-0853 | 1 | Pump Housing Seal Kit |
| 29:2 | 107-0810 | 1 | Gasket-Case, Center |
| 29:3 | 107-0817 | 2 | O Ring-Plug |
| 29:4 | 104-3298 | 1 | Packing |
| 29:5 | 107-0814 | 3 | Seal |
| 29:6 | 107-0825 | 4 | Ring-Seal |
| 30 | 120-6679 | 2 | Plate-Swash |
| 31 | 107-0808 | 2 | Valve-Bypass |
| 32 | 107-0804 | 2 | Valve-Rear |
| 33 | 107-0803 | 2 | Valve-Front |
| 34 | 107-0863 | 8 | Bolt |
| 35 | 107-0806 | 1 | Valve-Flushing, LH |
| 36 | 92-0757 | 2 | Ring-Snap |

# Gear Case and Clutch Assembly
# Transmission Assembly No. 131-5510

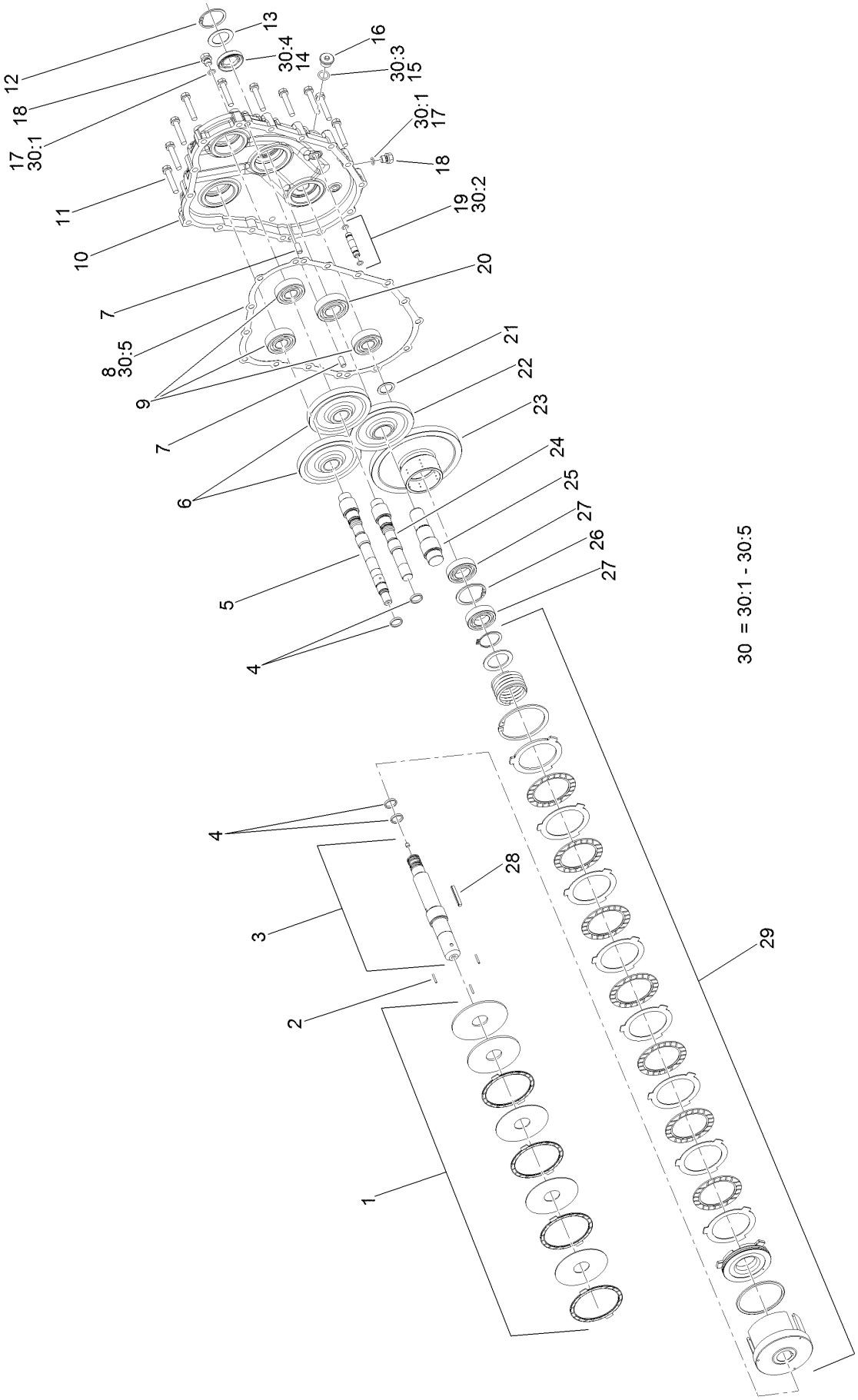

# Gear Case and Clutch Assembly
# Transmission Assembly No. 131-5510 (continued)

| Ref. | Part Number | Qty. | Description |
|---|---|---|---|
| 1 | 107-0839 | 1 | PTO Brake ASM |
| 2 | 107-0837 | 3 | Rod-Push |
| 3 | 107-0833 | 1 | PTO Shaft ASM |
| 4 | 107-0825 | 2 | Ring-Seal |
| 5 | 107-0827 | 1 | Shaft-Pump |
| 6 | 107-0823 | 2 | Gear-Pump |
| 7 | 92-0765 | 4 | Pin-Parallel |
| 8 | 107-0816 | 1 | Gasket-Housing, Gear |
| 9 | 107-0826 | 4 | Bearing |
| 10 | 120-5152 | 1 | Housing-Case, Gear |
| 11 | 107-0863 | 13 | Bolt |
| 12 | 92-0757 | 1 | Ring-Snap |
| 13 | 107-0813 | 1 | Spacer |
| 14 | 107-0814 | 1 | Seal |
| 15 | 104-3298 | 1 | Packing |
| 16 | 107-0861 | 1 | Plug-NPTF |
| 17 | 107-0817 | 6 | O Ring-Plug |
| 18 | 107-0857 | 6 | Plug |
| 19 | 107-0811 | 1 | Pipe |
| 20 | 107-0821 | 2 | Bearing |
| 21 | 107-0836 | 1 | Spacer |
| 22 | 107-0820 | 1 | Gear-Input |
| 23 | 107-0834 | 1 | Gear-PTO |
| 24 | 107-0822 | 1 | Shaft-Pump |
| 25 | 107-0819 | 1 | Shaft-Input |
| 26 | 92-0758 | 1 | Ring-Snap |
| 27 | 107-0838 | 3 | Bearing |
| 28 | 107-0866 | 1 | Key |
| 29 | 107-0835 | 1 | Clutch Cylinder ASM |
| 30 | 107-0854 | 1 | Gear Housing Seal Kit |
| 30:1 | 107-0817 | 2 | O Ring-Plug |
| 30:2 | | 2 | O-Ring ● |
| 30:3 | 104-3298 | 1 | Packing |
| 30:4 | 107-0814 | 1 | Seal |
| 30:5 | 107-0816 | 1 | Gasket-Housing, Gear |

● Not serviced separately

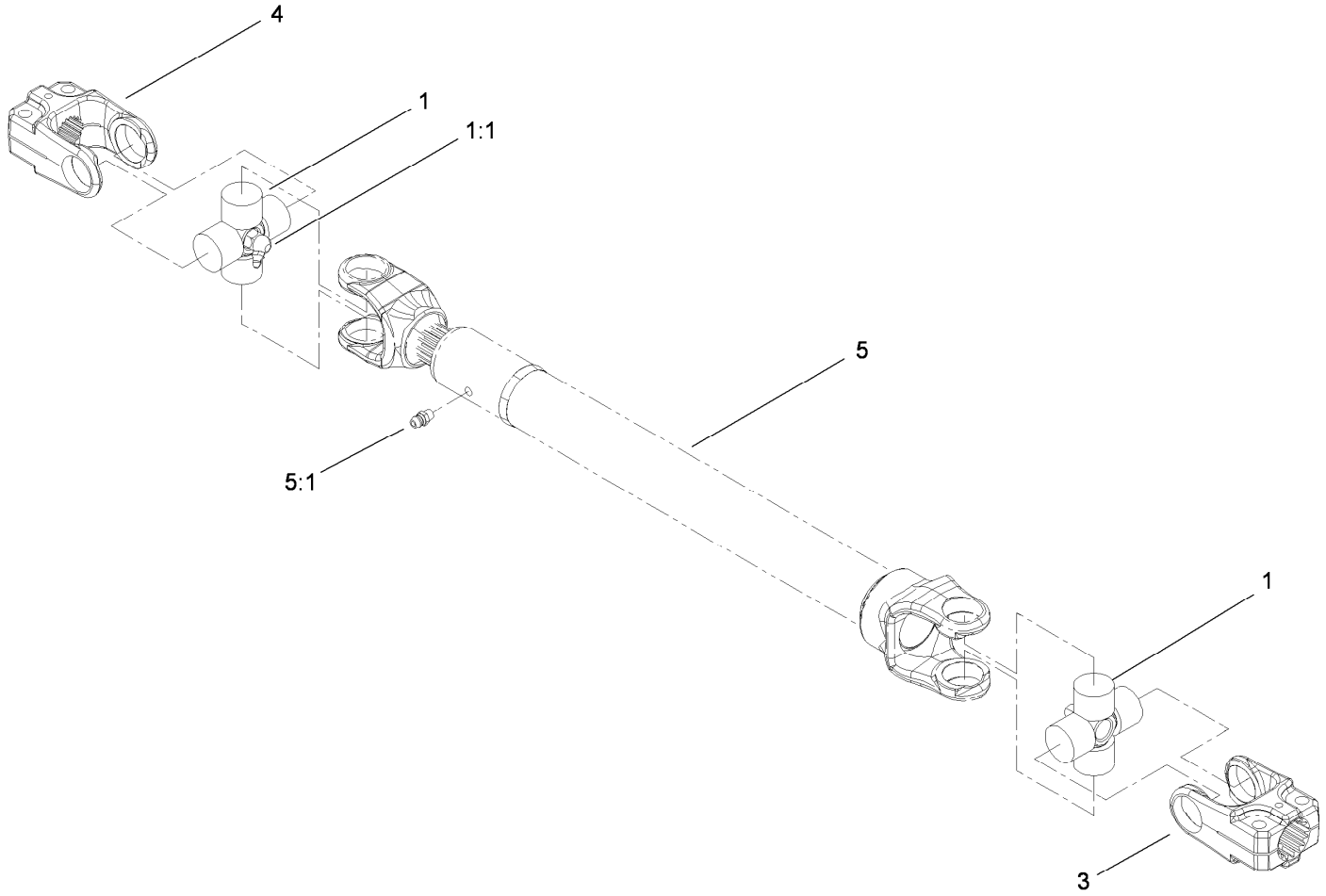


# Driveshaft Assembly No. 110-3575

| *Ref.* | *Part Number* | *Qty.* | *Description* |
|---|---|---|---|
| 1 | 112-1687 | 2 | Cross And Bearing Kit |
| 1:1 | 62-3820 | 1 | Fitting-Grease |
| 3 | 54-9040 | 1 | Yoke-End |
| 4 | 54-9090 | 1 | Yoke-End |
| 5 | | 1 | Tube-Yoke, Slip ● |
| 5:1 | 302-22 | 1 | Fitting-Grease |

● Not serviced separately

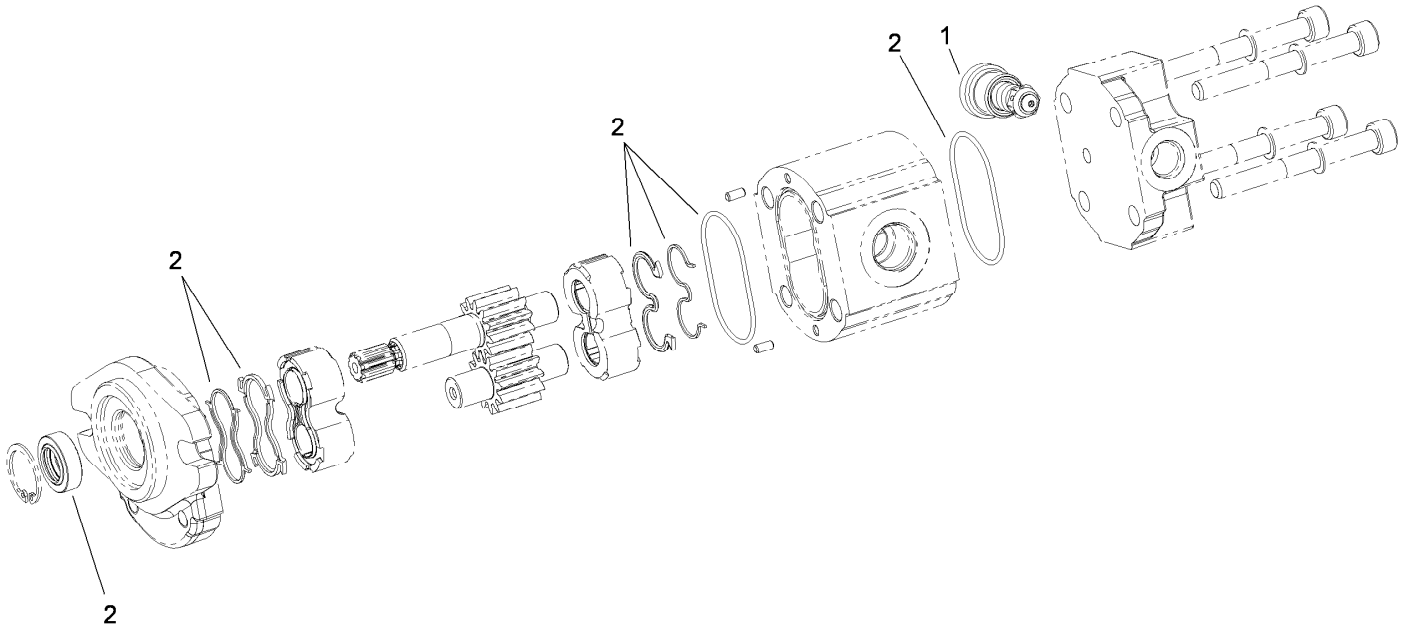


# Hydraulic Gear Pump Assembly No. 112-9542

| *Ref.* | *Part Number* | *Qty.* | *Description* |
|---|---|---|---|
| 1 | 112-0198 | 1 | Valve |
| 2 | 112-0199 | 1 | Seal Kit |

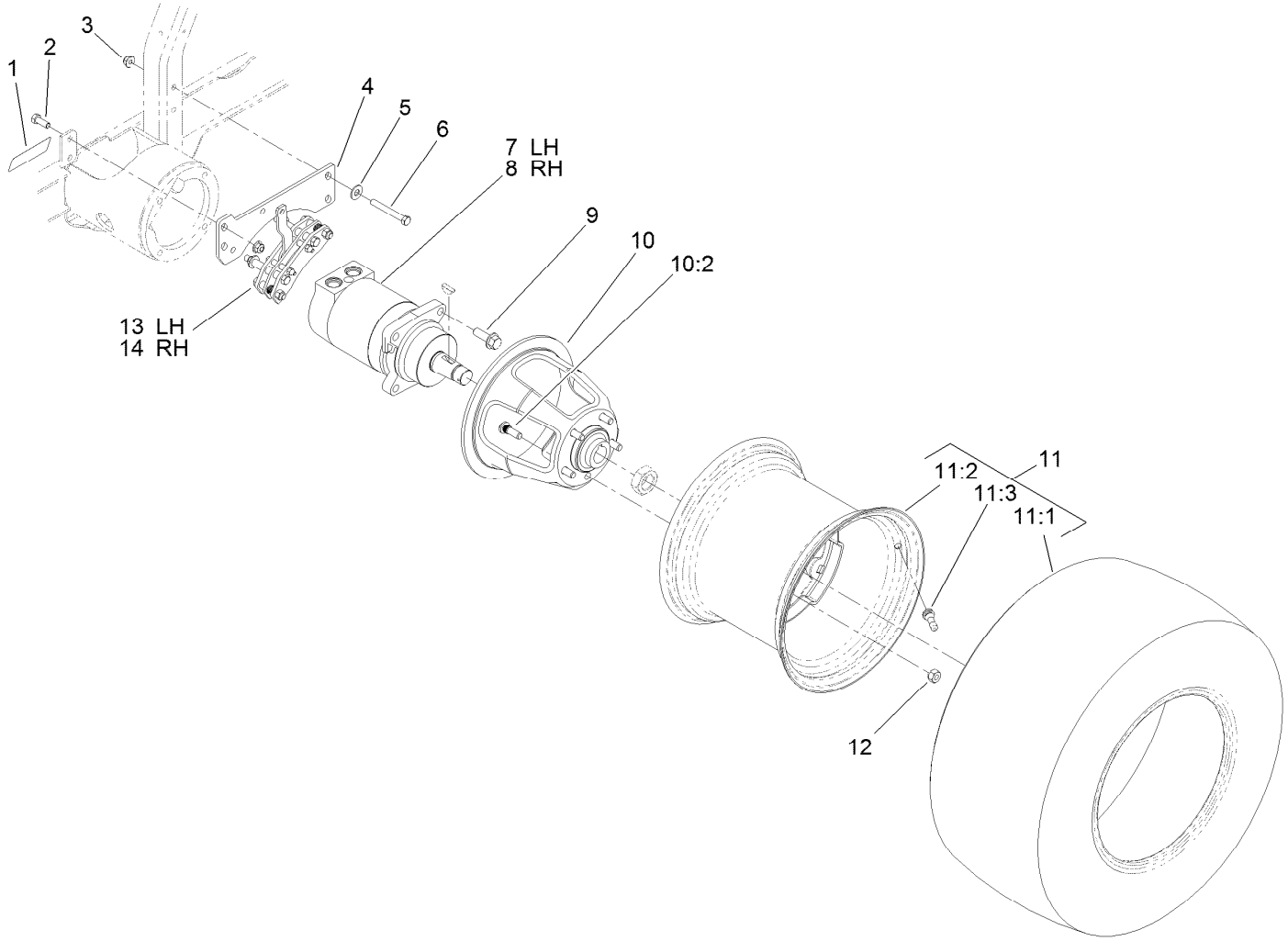


# Rear Drive Assembly

| Ref. | Part Number | Qty. | Description |
|---|---|---|---|
| 1 | 106-9206 | 2 | Decal-Torque, Wheel |
| 2 | 323-6 | 4 | Screw-HH |
| 3 | 104-8301 | 8 | Nut-Flange, NI |
| 4 | 112-9550-03 | 2 | Bracket-Brake |
| 5 | 3256-4 | 4 | Washer-Flat |
| 6 | 323-14 | 4 | Screw-HH |
| 7 | 108-5155 | 1 | LH HYD Motor ASM |
| 8 | 108-5230 | 1 | RH HYD Motor ASM |
| 9 | 100-6116 | 8 | Screw-HHF |

| Ref. | Part Number | Qty. | Description |
|---|---|---|---|
| 10 | 110-5535 | 2 | Wheel Hub ASM |
| 10:2 | 87-8730 | 5 | Stud |
| 11 | 106-7864 | 2 | Tire And Wheel ASM |
| 11:1 | 106-7868 | 1 | Tire |
| 11:2 | 87-6750 | 1 | Wheel |
| 11:3 | 232-27 | 1 | Stem-Valve |
| 12 | 23-7270 | 10 | Nut-Wheel |
| 13 | 120-0013 | 1 | LH Brake Caliper ASM |
| 14 | 120-0014 | 1 | RH Brake Caliper ASM |

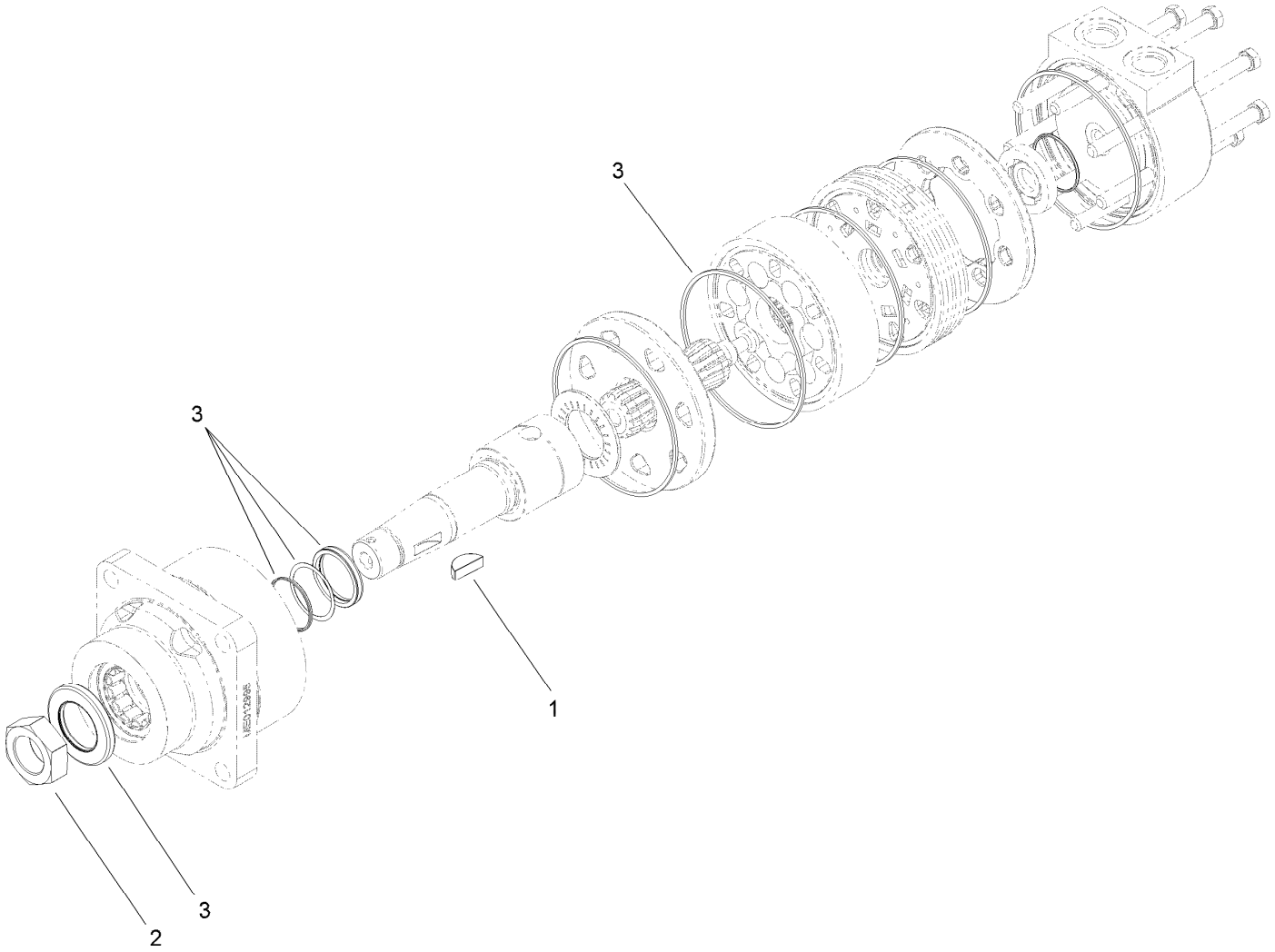


# Hydraulic Motor Assembly No. 108-5155

| *Ref.* | *Part Number* | *Qty.* | *Description* |
|---|---|---|---|
| 1 | 3257-42 | 1 | Key-Woodruff |
| 2 | 107-9319 | 1 | Nut-Hex |
| 3 | 112-8405 | 1 | Seal Kit |

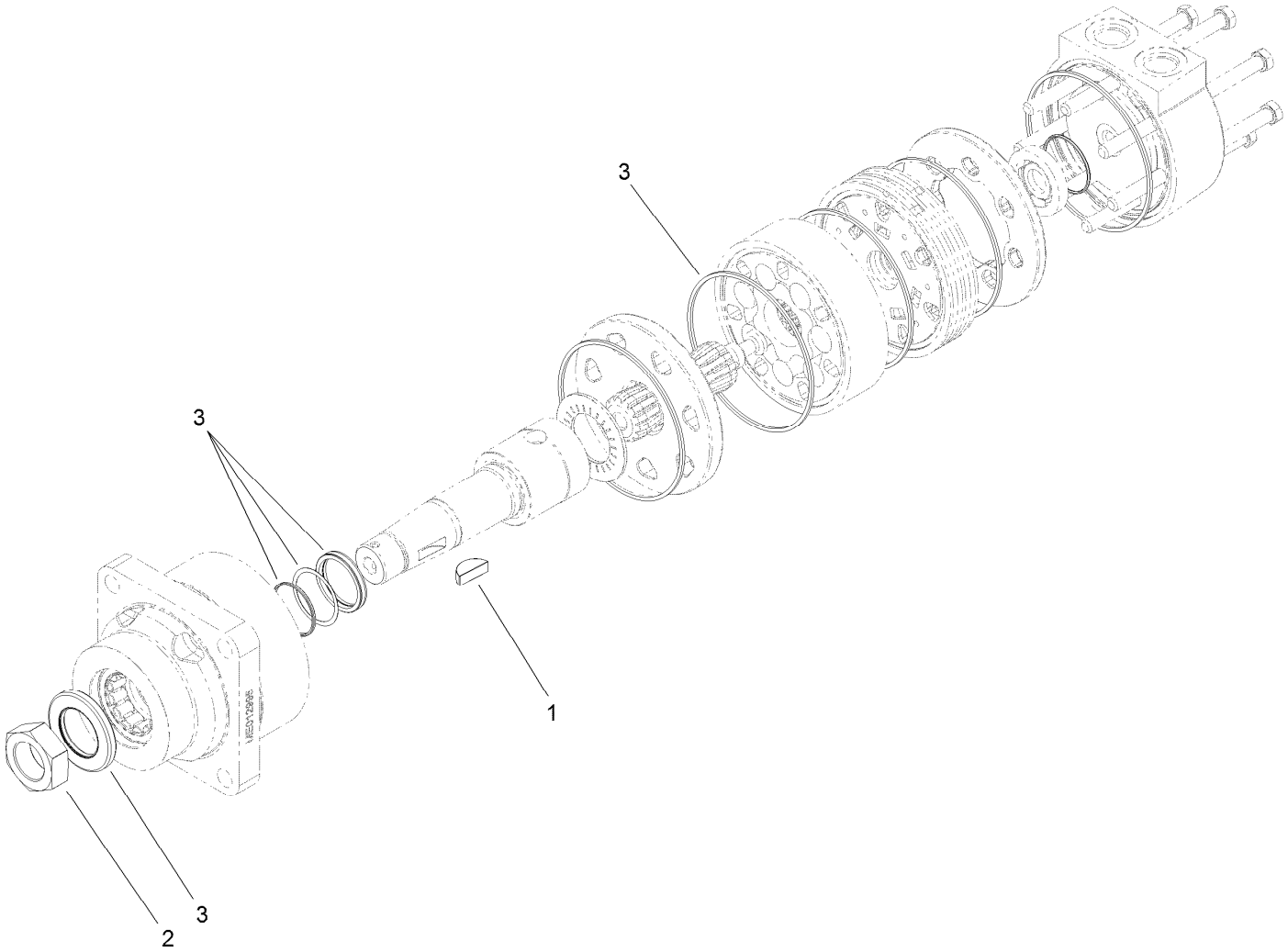


# Hydraulic Motor Assembly No. 108-5230

| *Ref.* | *Part Number* | *Qty.* | *Description* |
|---|---|---|---|
| 1 | 3257-42 | 1 | Key-Woodruff |
| 2 | 107-9319 | 1 | Nut-Hex |
| 3 | 112-8405 | 1 | Seal Kit |

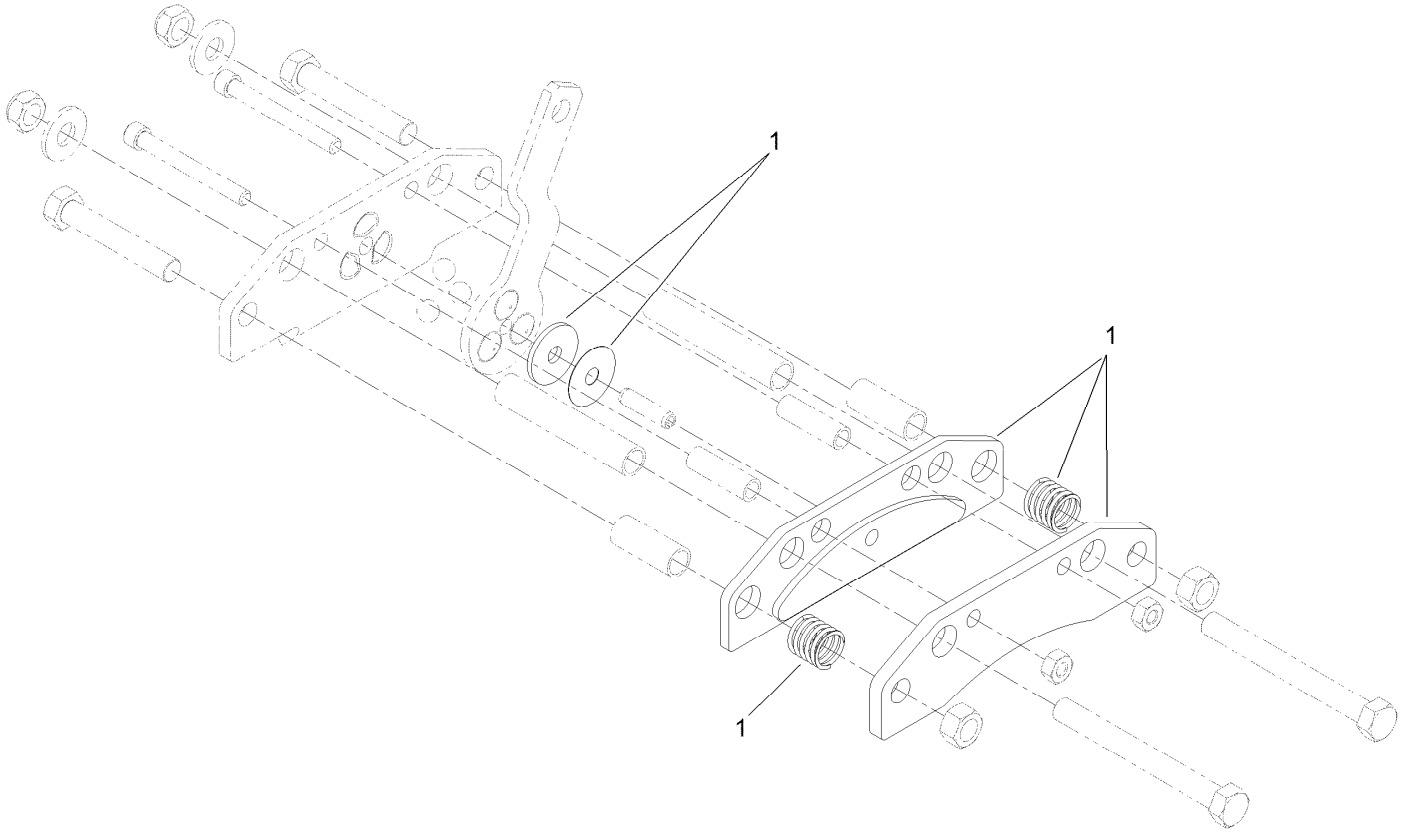


# LH Brake Caliper Assembly No. 120-0013

| *Ref.* | *Part Number* | *Qty.* | *Description* |
|---|---|---|---|
| 1 | 120-0015 | 1 | Replacement Brake Pad Service Kit |

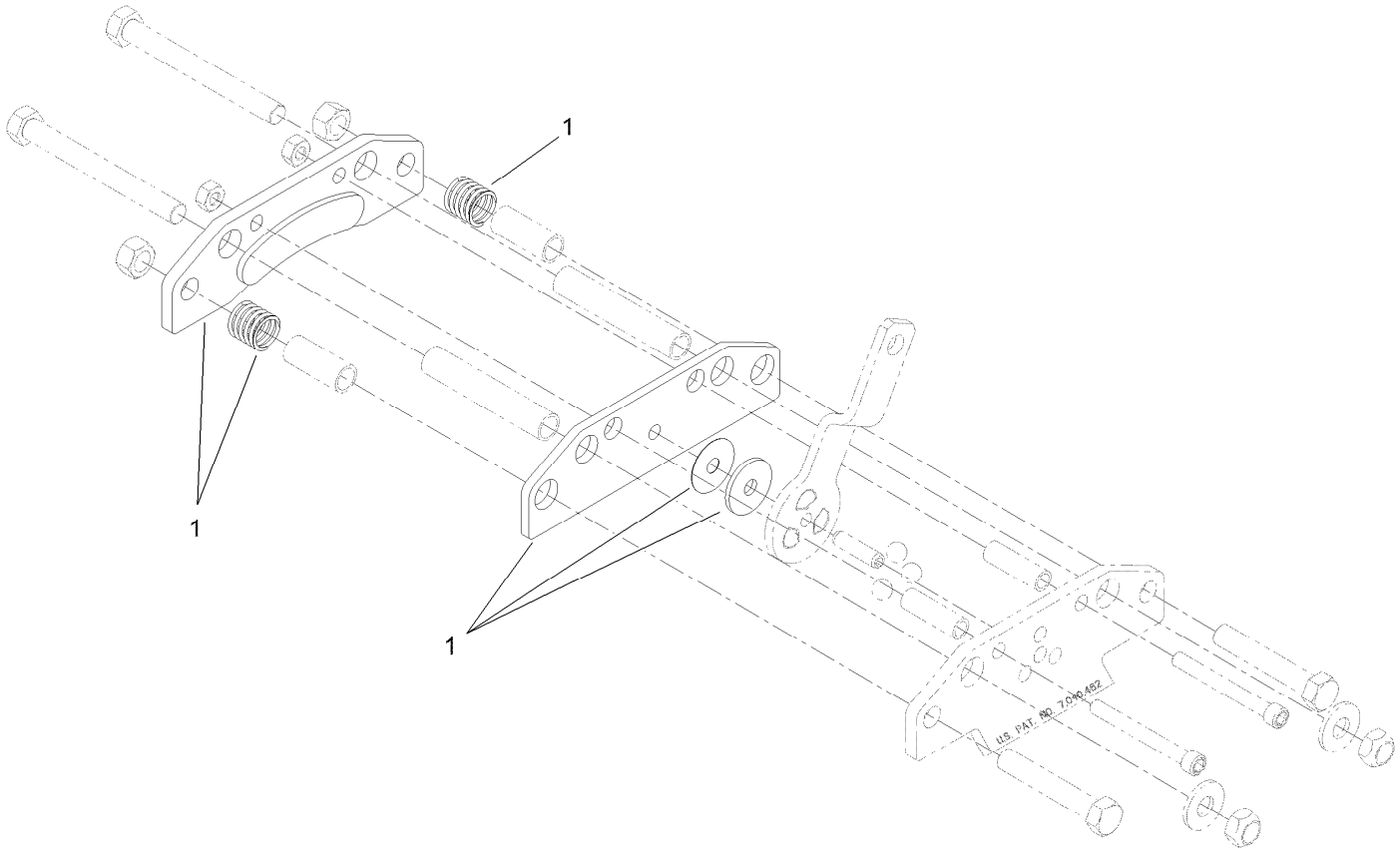


# RH Brake Caliper Assembly No. 120-0014

| *Ref.* | *Part Number* | *Qty.* | *Description* |
|---|---|---|---|
| 1 | 120-0015 | 1 | Replacement Brake Pad Service Kit |

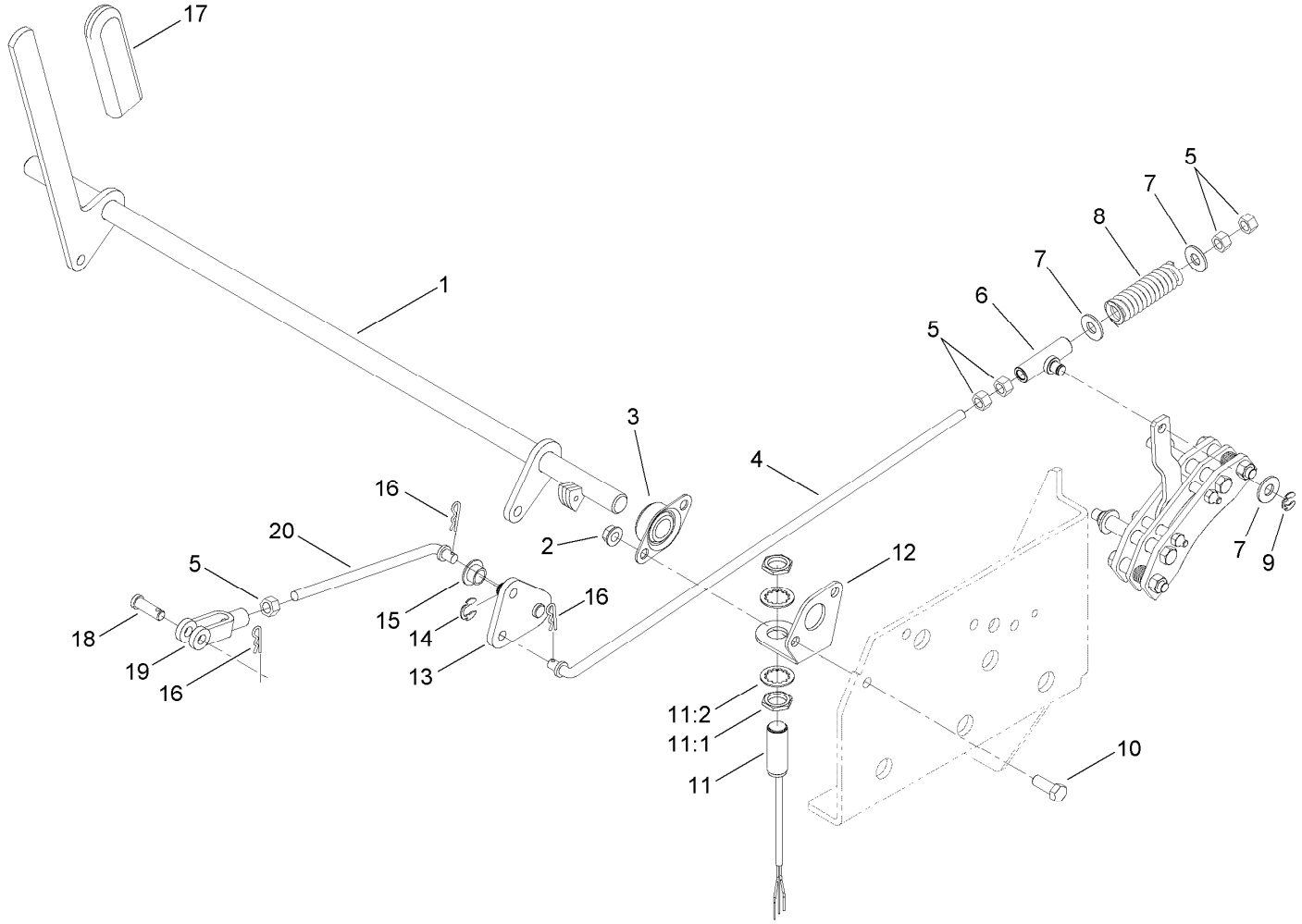


# Brake Handle Assembly

| Ref. | Part Number | Qty. | Description |
|---|---|---|---|
| 1 | 117-5582-03 | 1 | Handle-Brake |
| 2 | 3290-357 | 4 | Nut-HHF, Whiz |
| 3 | 1-633102 | 2 | Bearing-Flange, Side |
| 4 | 120-0009 | 2 | Rod-Brake |
| 5 | 3219-3 | 10 | Nut-Hex |
| 6 | 112-1676 | 2 | Swivel |
| 7 | 3256-4 | 6 | Washer-Flat |
| 8 | 109-2230 | 2 | Spring-Compression |
| 9 | 32151-47 | 2 | Ring-Retaining |
| 10 | 323-6 | 4 | Screw-HH |
| 11 | 115-5300 | 1 | Proximity Switch ASM |

| Ref. | Part Number | Qty. | Description |
|---|---|---|---|
| 11:1 | 117-3207 | 2 | Nut-Hex |
| 11:2 | 117-3208 | 2 | Washer-Lock, Internal Tooth |
| 12 | 117-5572 | 1 | Bracket-Switch |
| 13 | 120-0022 | 2 | Pivot-Brake |
| 14 | 32151-68 | 2 | Ring-Retaining |
| 15 | 1-513140 | 4 | Bearing-Control |
| 16 | 3290-307 | 6 | Pin-Cotter |
| 17 | 1-633268 | 1 | Grip-Lever |
| 18 | 1-808285 | 2 | Pin-Clevis |
| 19 | 1-633131 | 2 | Yoke-Linkage, Brake |
| 20 | 120-0023 | 2 | Rod-Brake |

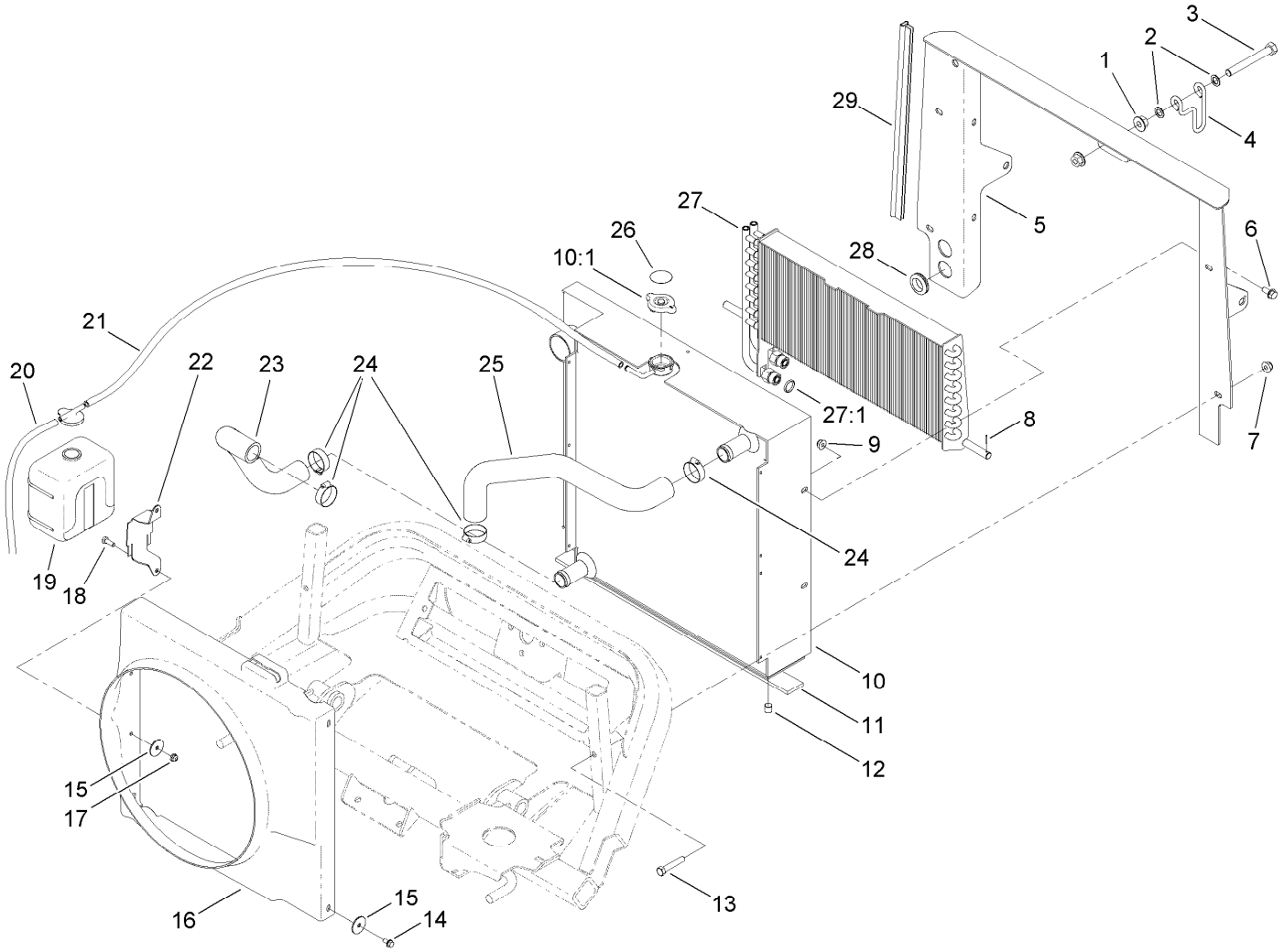


# Radiator and Oil Cooler Assembly

| Ref. | Part Number | Qty. | Description |
|---|---|---|---|
| 1 | 32128-49 | 2 | Nut-HHF |
| 2 | 41-8440 | 2 | Washer |
| 3 | 325-17 | 1 | Screw-HH |
| 4 | 104-5429 | 1 | Clamp-Form, Wire |
| 5 | 110-8277-03 | 1 | Frame-Radiator |
| 6 | 3234-5 | 4 | Screw-HHF |
| 7 | 104-8301 | 4 | Nut-Flange, NI |
| 8 | 32121-107 | 1 | Pin-Roll, Slotted |
| 9 | 104-8300 | 4 | Nut-Flange, NI |
| 10 | 117-5135 | 1 | Radiator |
| 10:1 | 121-3518 | 1 | Cap-Radiator |
| 11 | 108-9935 | 1 | Strip-Foam |
| 12 | 99-8551 | 1 | Plug-Pipe |
| 13 | 323-10 | 4 | Screw-HH |
| 14 | 32104-116 | 4 | Screw-HF |
| 15 | 3256-55 | 6 | Washer-Flat |

| Ref. | Part Number | Qty. | Description |
|---|---|---|---|
| 16 | 117-9232 | 1 | Shroud-Fan |
| 17 | 104-7201 | 2 | Nut-Flange, NI |
| 18 | 321-4 | 2 | Screw-HH |
| 19 | 108-0638 | 1 | Bottle-Overflow |
| 20 | 108-3284 | 1 | Hose-Fuel |
| 21 | 109-0274 | 1 | Hose-Fuel |
| 22 | 108-9930-03 | 1 | Bracket-Bottle |
| 23 | 105-7283 | 1 | Hose-Radiator, Lower |
| 24 | 2412-34 | 4 | Clamp-Hose |
| 25 | 105-7282 | 1 | Hose-Radiator, Upper |
| 26 | 106-6755 | 1 | Decal-Cap, Radiator |
| 27 | 112-1684 | 1 | Cooler-Oil |
| 27:1 | 237-30 | 2 | O-Ring |
| 28 | 240-5 | 2 | Grommet |
| 29 | 107-2269 | 2 | Seal-Bulb |

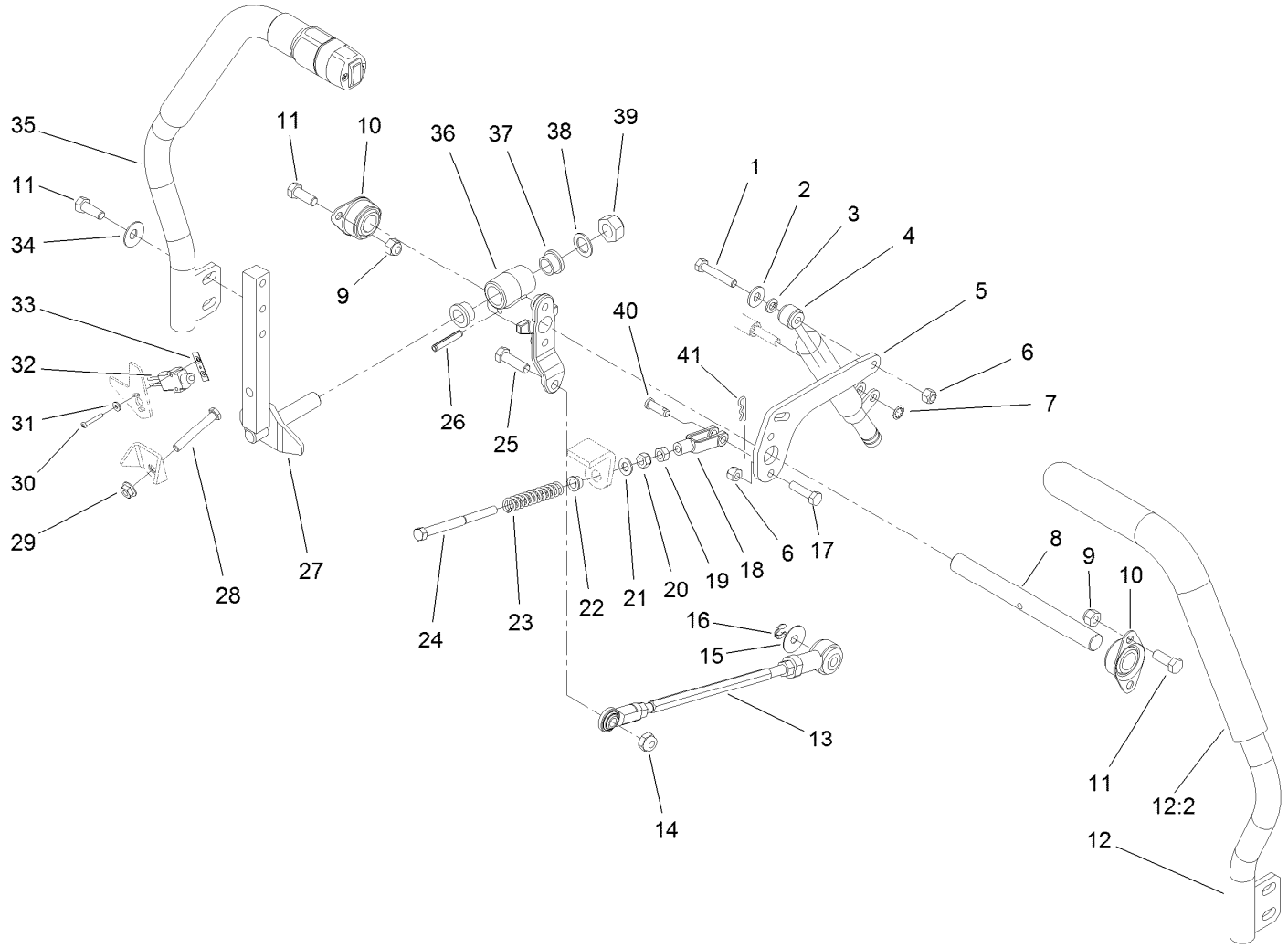


# Traction Control Assembly

| Ref. | Part Number | Qty. | Description |
|---|---|---|---|
| 1 | 322-9 | 2 | Screw-HH |
| 2 | 3256-3 | 2 | Washer-Flat |
| 3 | 3253-4 | 4 | Washer-Lock |
| 4 | 105-7280 | 2 | Damper |
| 5 | 108-9829-03 | 2 | Lever-Damper |
| 6 | 3296-29 | 6 | Nut-Lock, NI |
| 7 | 32151-72 | 2 | Ring-Retaining |
| 8 | 108-9830 | 2 | Shaft-Pivot |
| 9 | 3296-39 | 8 | Nut-Lock, NI |
| 10 | 1-633102 | 4 | Bearing-Flange, Side |
| 11 | 323-6 | 12 | Screw-HH |
| 12 | 125-2688 | 1 | LH Lever ASM |
| 12:2 | 125-2704 | 1 | Grip-Foam |
| 13 | 112-5099 | 2 | Link ASM |
| 14 | 3296-44 | 2 | Nut-Lock, NI |
| 15 | 105-6814 | 2 | Washer-Plain |
| 16 | 32151-47 | 2 | Ring-Retaining |
| 17 | 322-6 | 4 | Screw-HH |
| 18 | 1-303105 | 2 | Yoke-Adjustable |
| 19 | 3219-2 | 2 | Nut-Hex |
| 20 | 3296-4 | 2 | Nut-Lock |

| Ref. | Part Number | Qty. | Description |
|---|---|---|---|
| 21 | 3256-23 | 2 | Washer-Flat |
| 22 | 1-603735 | 2 | Bushing-Flanged |
| 23 | 1-603807 | 2 | Spring-Return, Neutral |
| 24 | 1-603737 | 2 | Bolt-Return, Neutral |
| 25 | 323-7 | 2 | Screw-HH |
| 26 | 32121-15 | 2 | Pin-Roll |
| 27 | 108-9833-03 | 2 | Lever |
| 28 | 9114524 | 2 | Bolt-TAP, HH |
| 29 | 32128-26 | 2 | Nut-Flange |
| 30 | 3250-35 | 4 | Screw-PPH |
| 31 | 3256-53 | 4 | Washer-Flat |
| 32 | 99-3410 | 2 | Switch |
| 33 | 108-9824 | 2 | Nut-Switch |
| 34 | 3290-461 | 4 | Washer-Spring |
| 35 | 125-2687 | 1 | RH Lever ASM |
| 36 | 108-9831 | 2 | Hub-Control |
| 37 | 105-3455 | 4 | Bushing |
| 38 | 105-3481 | 4 | Washer-Thrust |
| 39 | 32152-6 | 2 | Nut-Lock, Cone |
| 40 | 283-1 | 2 | Pin-Clevis |
| 41 | 3290-307 | 2 | Pin-Cotter |

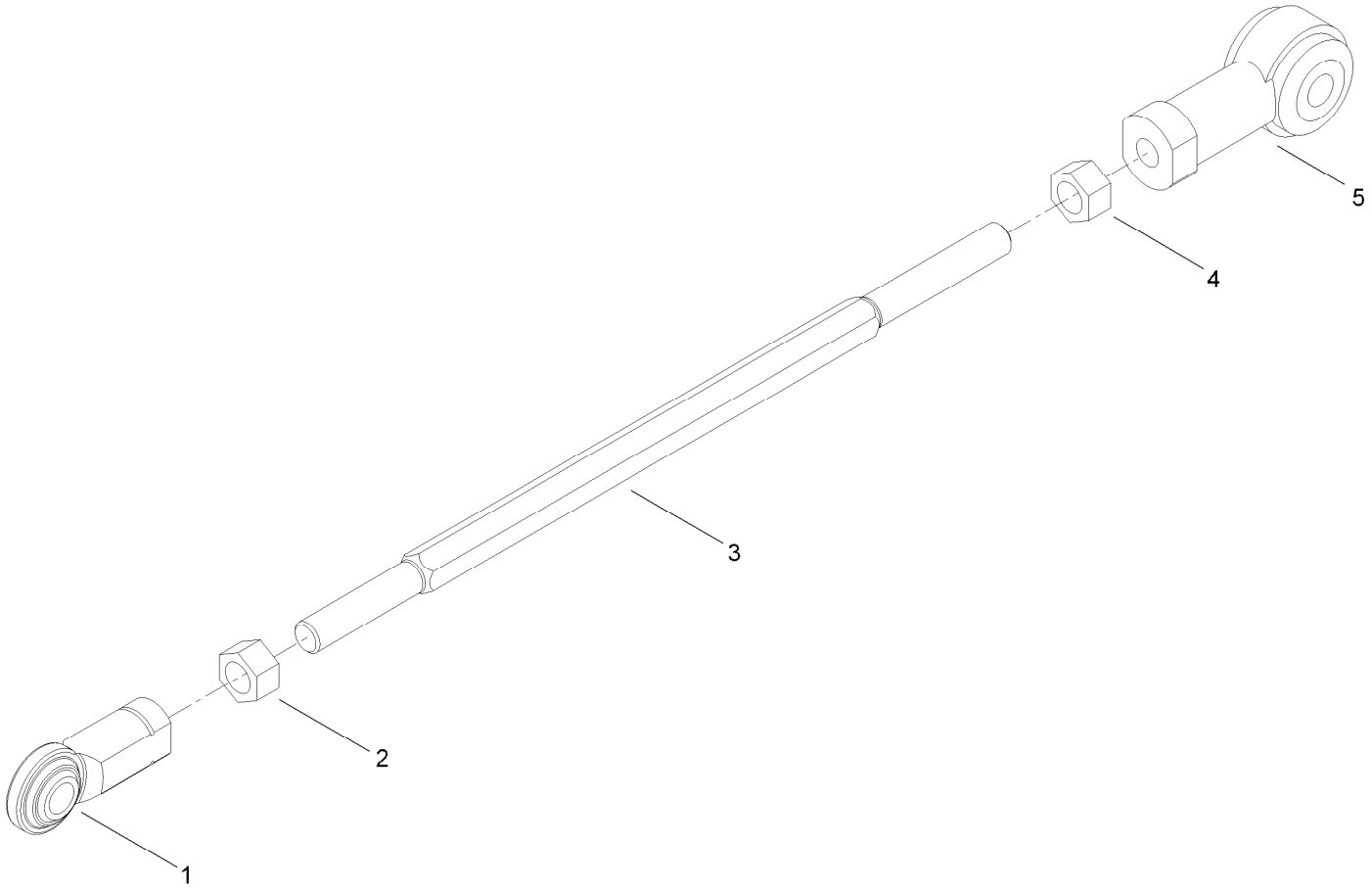


# Link Assembly No. 112-5099

| *Ref.* | *Part Number* | *Qty.* | *Description* |
|---|---|---|---|
| 1 | 103-1167 | 1 | Joint-Ball End, LH |
| 2 | 3219-20 | 1 | Nut-Hex, LH |
| 3 | 105-7239 | 1 | Rod-Threaded |
| 4 | 3219-3 | 1 | Nut-Hex |
| 5 | 105-7199 | 1 | Rod End-Isolated |

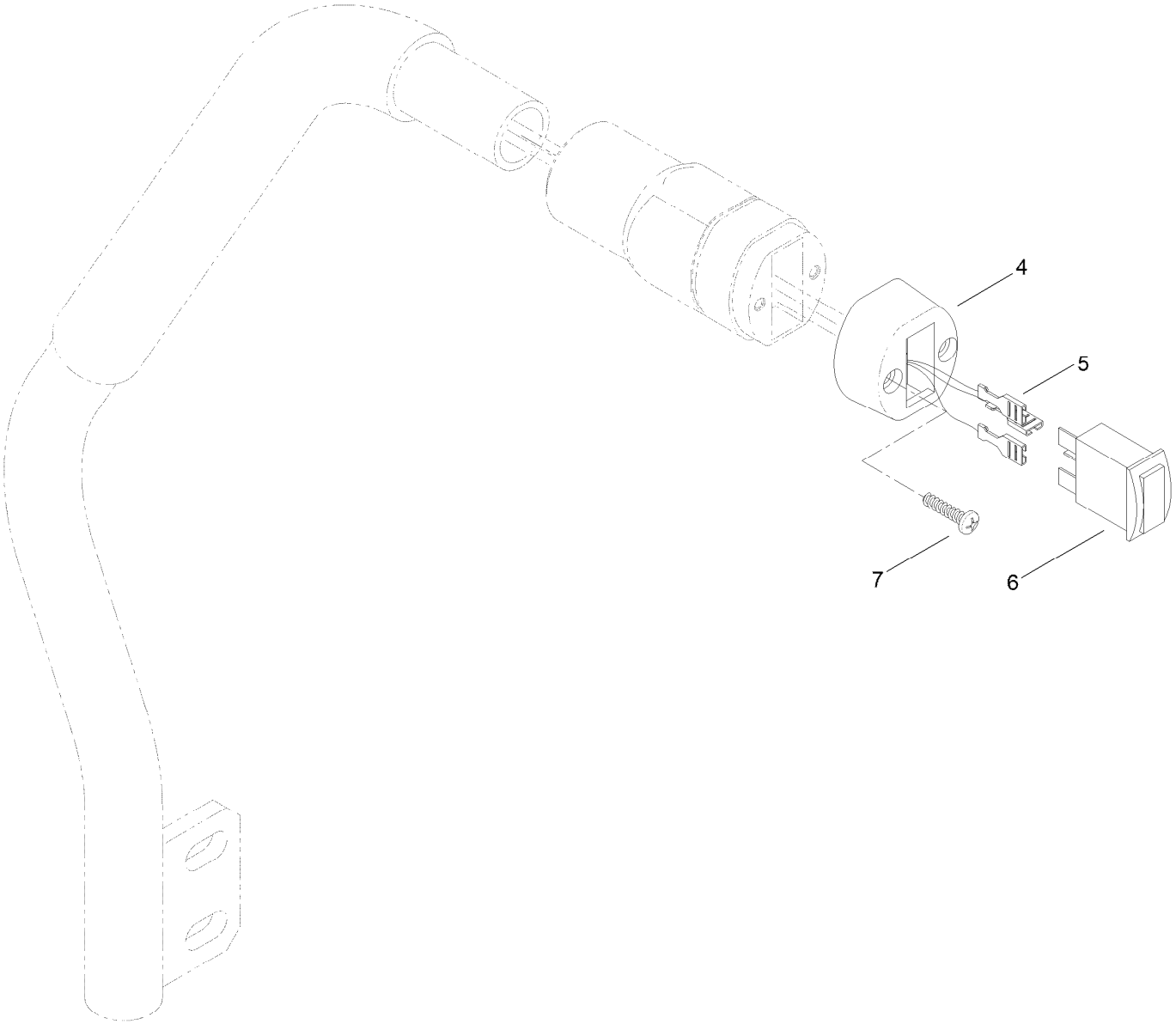


# RH Lever Assembly No. 125-2687

| *Ref.* | *Part Number* | *Qty.* | *Description* |
|---|---|---|---|
| 4 | 121-3399 | 1 | Cap-Switch |
| 5 | 119-4382 | 1 | Harness-Control Handle |
| 6 | 125-2702 | 1 | Switch, Spst (On)-Off-On |
| 7 | 94-4496 | 2 | Screw-PPH |

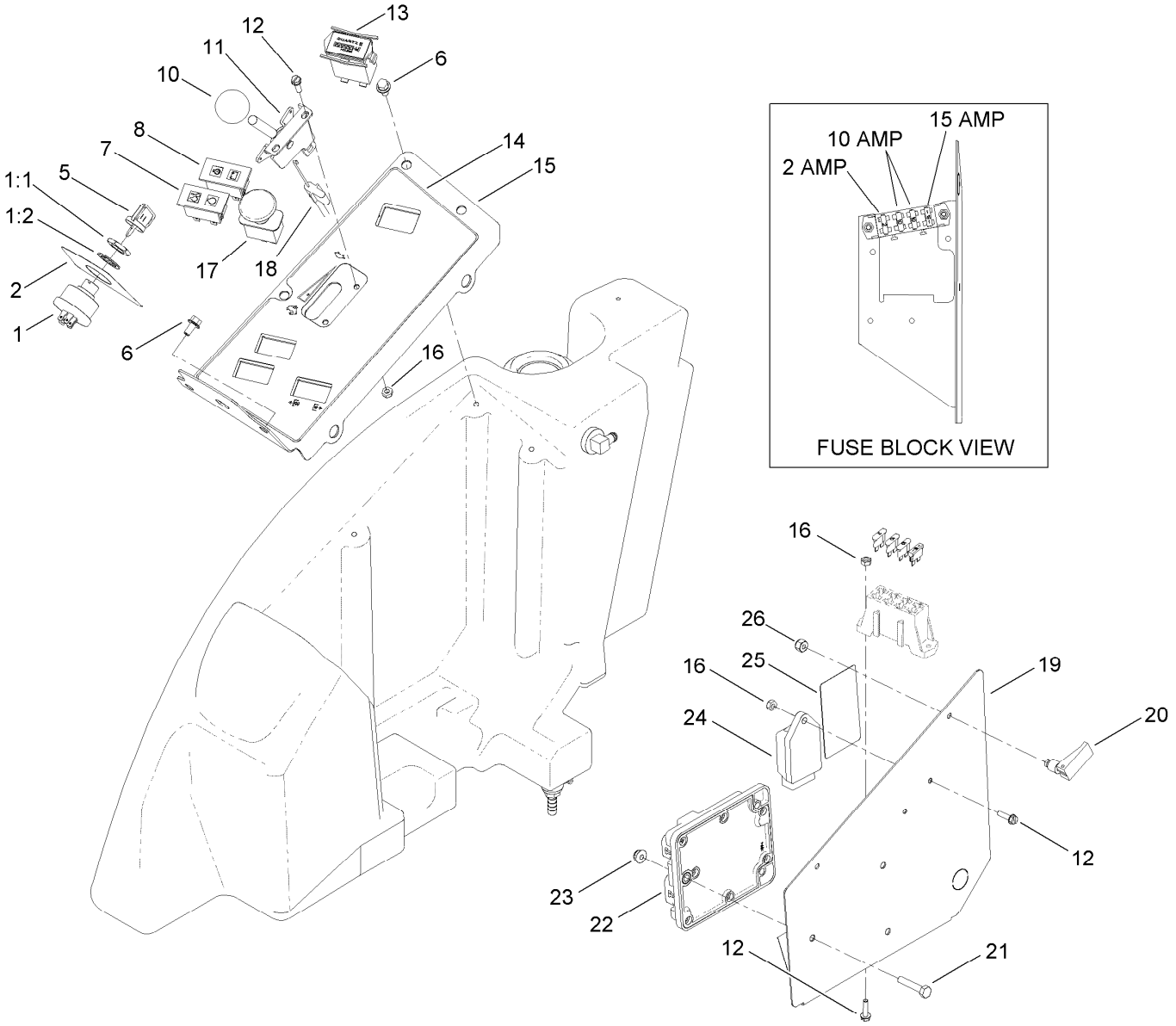


# Control Panel Assembly

| Ref. | Part Number | Qty. | Description |
|---|---|---|---|
| 1 | 104-2541 | 1 | Switch ASM |
| 1:1 | 218-461 | 1 | Nut-HH |
| 1:2 | 3254-5 | 1 | Washer-Tooth, Internal |
| 2 | 110-8254 | 1 | Decal-Start, Control Panel |
| 5 | 63-8360 | 2 | Key-Ignition |
| 6 | 3234-13 | 5 | Screw-HHF |
| 7 | 100-8071 | 1 | Lamp-Warning |
| 8 | 100-8070 | 1 | Lamp-Warning |
| 10 | 233-42 | 1 | Knob |
| 11 | 110-5547 | 1 | Lever-Control |
| 12 | 32105-13 | 5 | Screw-HWH |
| 13 | 1-513374 | 1 | Meter-Hour |
| 14 | 110-8253 | 1 | Decal-Panel, Control |

| Ref. | Part Number | Qty. | Description |
|---|---|---|---|
| 15 | 110-8256-03 | 1 | Panel-Control |
| 16 | 3296-2 | 5 | Nut-Lock, NI |
| 17 | 93-9999 | 1 | Switch-PTO |
| 18 | 110-5548 | 1 | Cable-Throttle |
| 19 | 110-8257-03 | 1 | Cover-Panel, Control |
| 20 | 74-5950 | 2 | Latch-Swell |
| 21 | 321-13 | 3 | Screw-HH |
| 22 | 106-9277 | 1 | Module-Control, Standard |
| 23 | 104-7201 | 3 | Nut-Flange, NI |
| 24 | 107-9097 | 1 | Controller-Glow |
| 25 | 110-9796 | 1 | Decal-Block, Fuse |
| 26 | 1-804254 | 2 | Nut-Lock, HH |

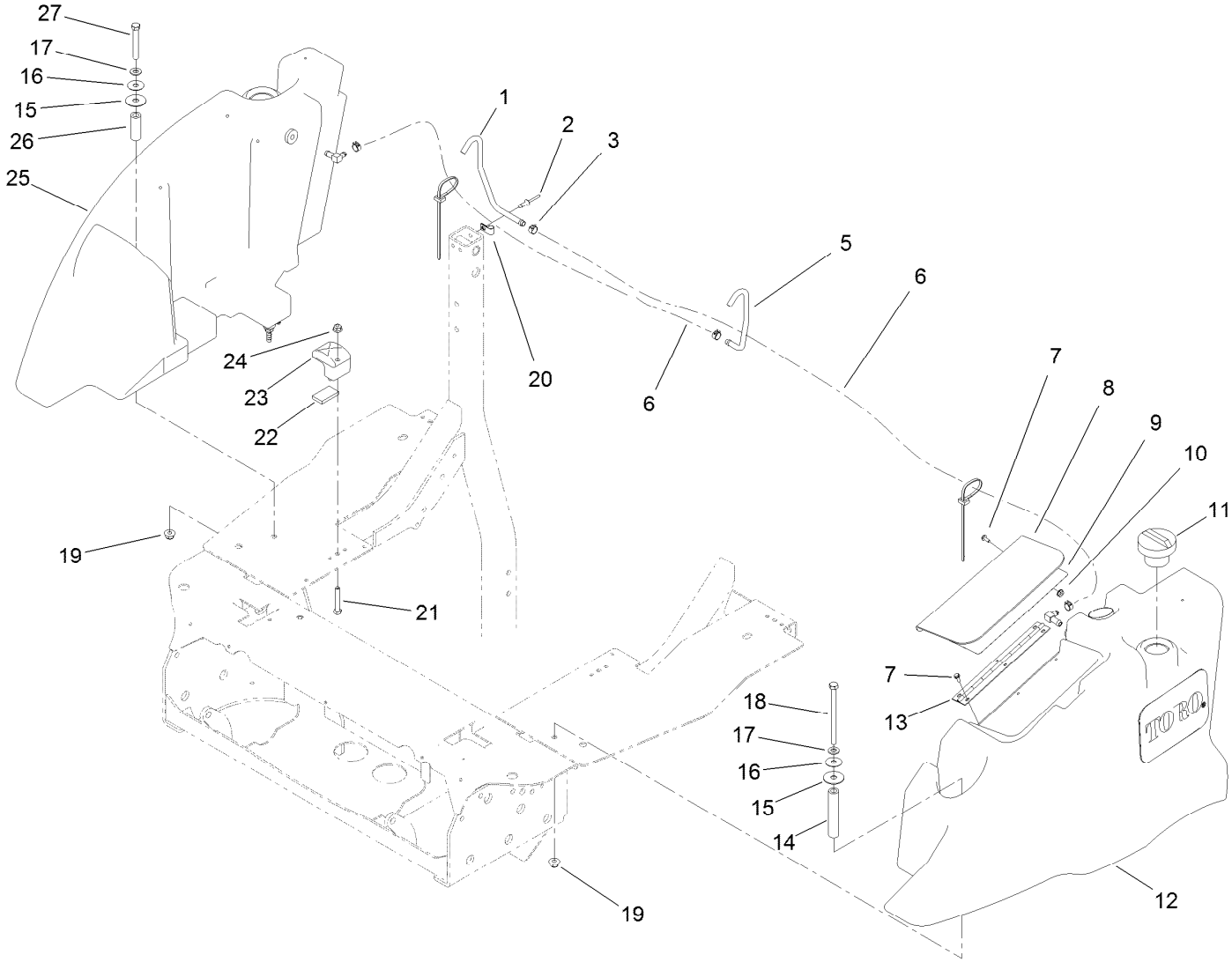


# Left-Hand and Right-Hand Fuel Tank Assembly

| Ref. | Part Number | Qty. | Description |
|---|---|---|---|
| 1 | 110-8260 | 1 | Tube-Vent, RH |
| 2 | 3290-412 | 2 | Rivet |
| 3 | 92-2379 | 4 | Clamp-Hose |
| 5 | 110-8261 | 1 | Tube-Vent, LH |
| 6 | 110-6186 | 2 | Hose-Fuel |
| 7 | 112-6349 | 6 | Screw-HWH |
| 8 | 110-5540-03 | 1 | Cover-Toolbox |
| 9 | 110-8252 | 1 | Decal-Instructions, Service |
| 10 | 32149-8 | 3 | Nut-Keps |
| 11 | 115-5305 | 2 | Cap-Fuel |
| 12 | 110-8230 | 1 | LH Fuel Tank ASM |
| 13 | 108-2024 | 1 | Hinge |
| 14 | 110-5539 | 1 | Spacer |
| 15 | 95-1905 | 2 | Washer-Rubber |
| 16 | 105-6814 | 2 | Washer-Plain |
| 17 | 3256-24 | 2 | Washer-Flat |
| 18 | 323-39 | 1 | Screw-HH |
| 19 | 104-8301 | 2 | Nut-Flange, NI |
| 20 | 2412-89 | 2 | Clamp-R |
| 21 | 322-10 | 4 | Screw-HH |
| 22 | 112-9561 | 4 | Pad-Foam |
| 23 | 107-4543 | 4 | Clamp |
| 24 | 104-8300 | 4 | Nut-Flange, NI |
| 25 | 110-8236 | 1 | RH Fuel Tank ASM |
| 26 | 92-1239 | 1 | Spacer-Support |
| 27 | 323-13 | 1 | Screw-HH |

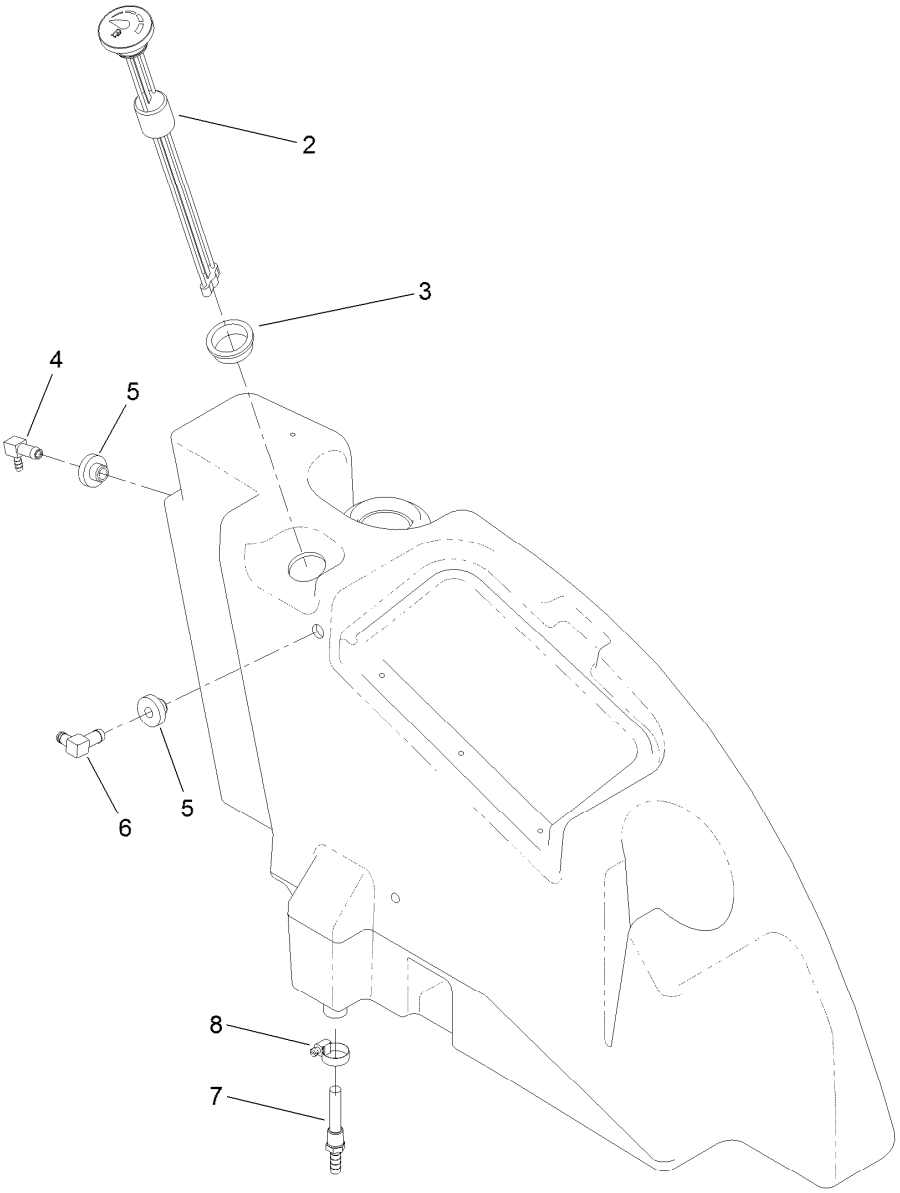


# LH Fuel Tank Assembly No. 110-8230

| *Ref.* | *Part Number* | *Qty.* | *Description* |
|---|---|---|---|
| 2 | 110-8262 | 1 | Gauge-Fuel |
| 3 | 95-8972 | 1 | Grommet |
| 4 | 104-5228 | 1 | Fitting-Elbow, 90 DEG |
| 5 | 46-6560 | 2 | Bushing |
| 6 | 1-643259 | 1 | Fitting-Elbow |
| 7 | 112-6374 | 1 | Fitting-Strainer |
| 8 | 2412-36 | 1 | Clamp-Hose |

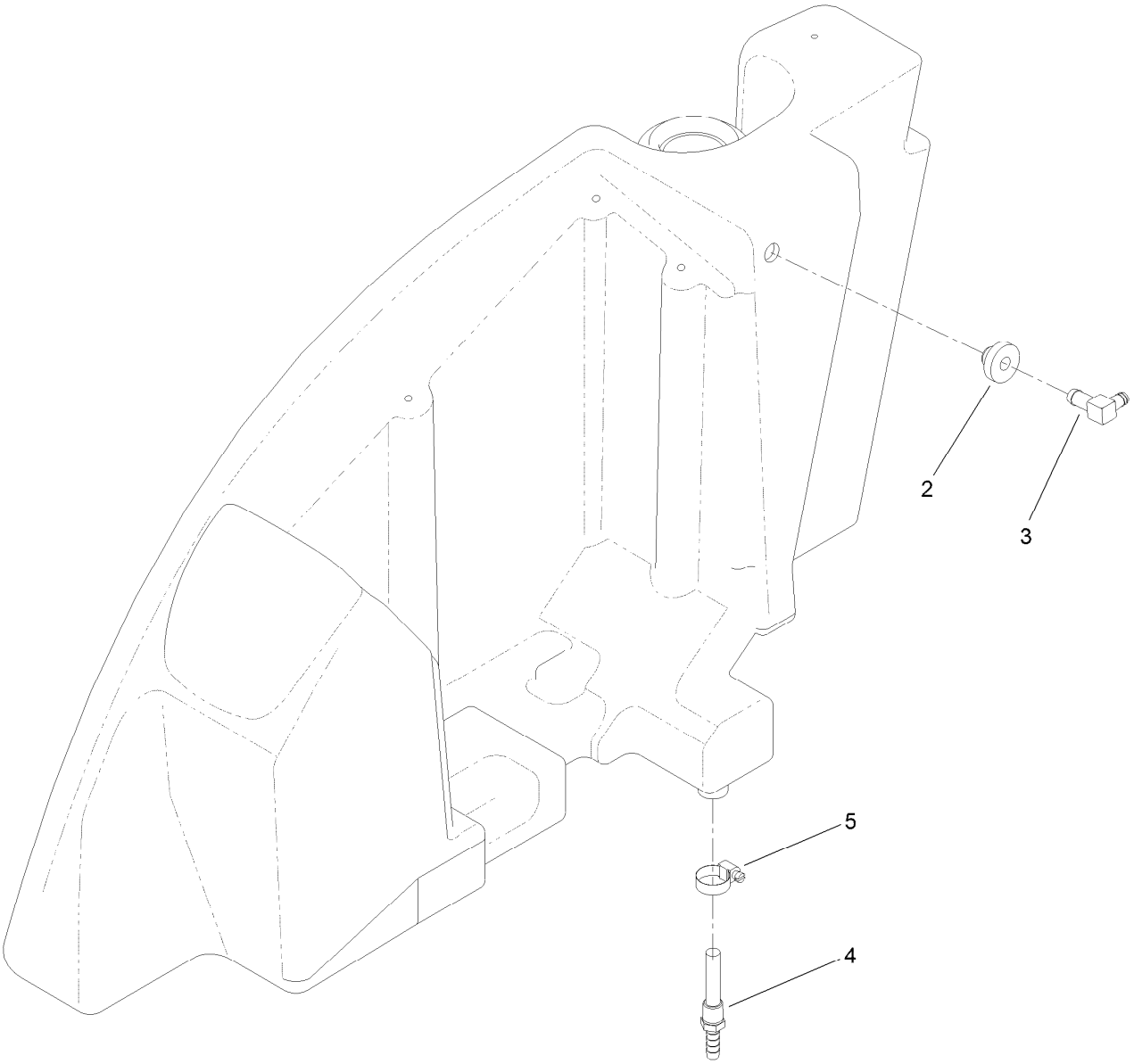


# RH Fuel Tank Assembly No. 110-8236

| Ref. | Part Number | Qty. | Description |
|---|---|---|---|
| 2 | 46-6560 | 1 | Bushing |
| 3 | 1-643259 | 1 | Fitting-Elbow |
| 4 | 112-6374 | 1 | Fitting-Strainer |
| 5 | 2412-36 | 1 | Clamp-Hose |

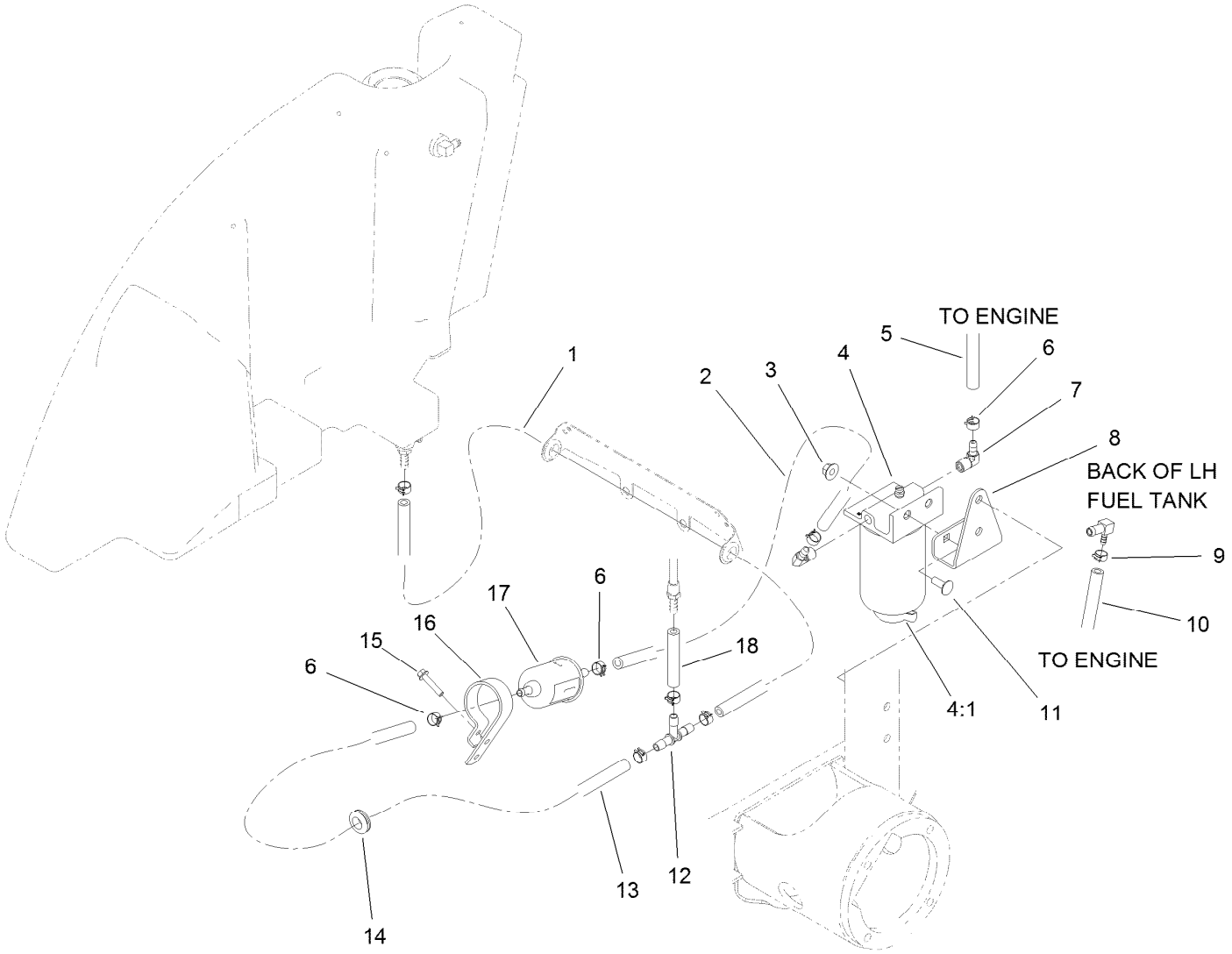


# Fuel Filter / Separator Assembly

| Ref. | Part Number | Qty. | Description |
|---|---|---|---|
| 1 | 110-6186 | 1 | Hose-Fuel |
| 2 | 110-8752 | 1 | Hose-Fuel |
| 3 | 32128-44 | 2 | Nut |
| 4 | 110-9044 | 1 | Separator Filter ASM |
| 4:1 | 110-9049 | 1 | Filter-Spin On |
| 5 | 110-4104 | 1 | Hose-Fuel |
| 6 | 92-2379 | 10 | Clamp-Hose |
| 7 | 353-781 | 2 | Fitting-Elbow |
| 8 | 114-4058-03 | 1 | Mount-Separator |
| 9 | 2412-80 | 2 | Clamp-Hose |

| Ref. | Part Number | Qty. | Description |
|---|---|---|---|
| 10 | 110-8255 | 1 | Hose-Fuel |
| 11 | 3230-10 | 2 | Screw-CARR |
| 12 | 354-107 | 1 | Fitting-HYD, Tee |
| 13 | 114-4028 | 1 | Hose-Fuel |
| 14 | 32180-030 | 1 | Clip-Tie |
| 15 | 32144-110 | 1 | Screw-HWH |
| 16 | 110-8817 | 1 | Bracket-Pump, Fuel |
| 17 | 110-8806 | 1 | Pump-Fuel |
| 18 | 112-6388 | 1 | Hose-Fuel |

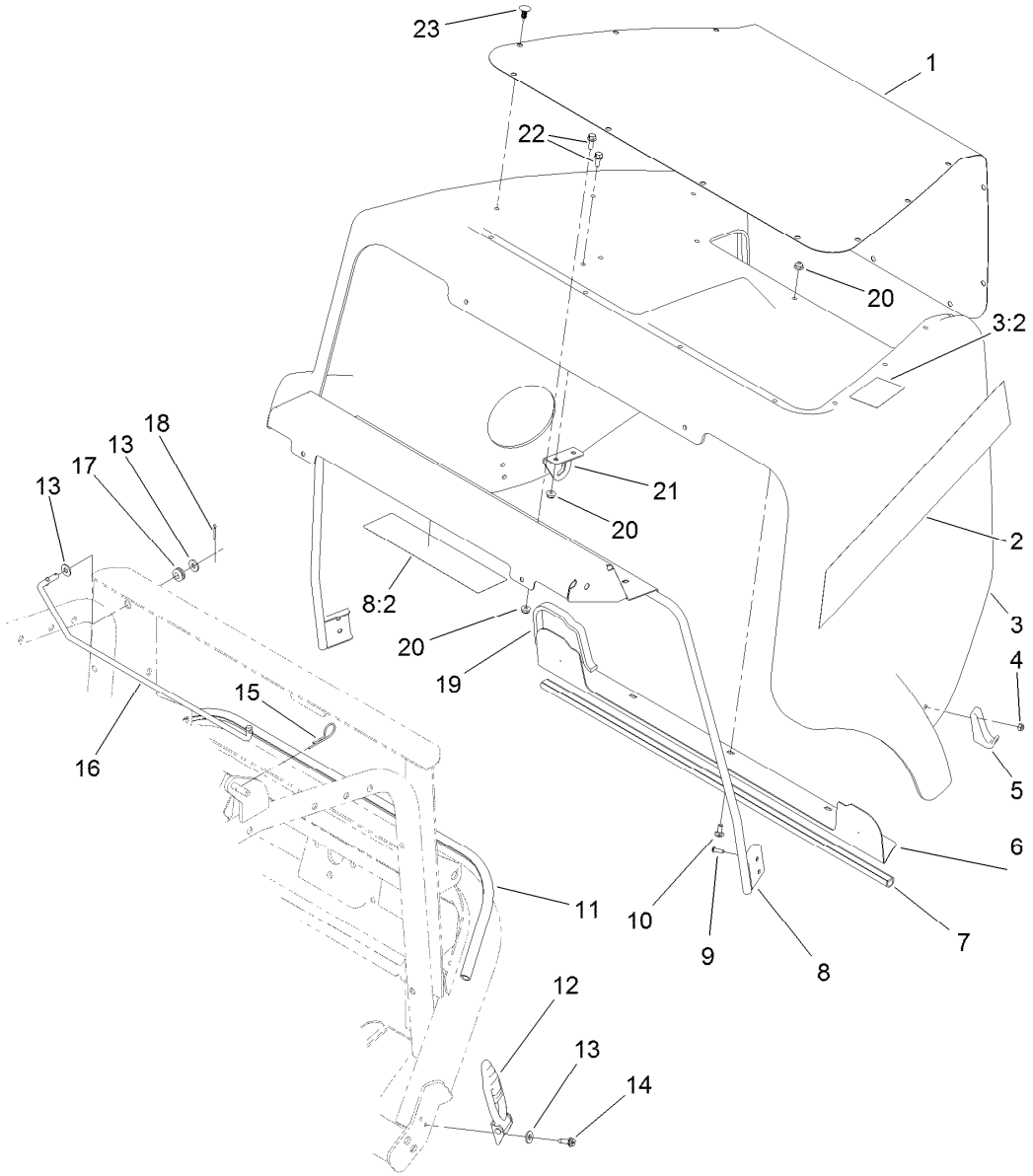


# Hood and Screen Assembly

| Ref. | Part Number | Qty. | Description |
|---|---|---|---|
| 1 | 115-1446-03 | 1 | Screen-Intake |
| 2 | 110-5544 | 2 | Decal-Hood |
| 3 | 112-6311 | 1 | Hood ASM |
| 3:2 | 106-6754 | 1 | Decal-Danger |
| 4 | 3296-2 | 4 | Nut-Lock, NI |
| 5 | 103-2897 | 2 | Latch-Catch |
| 6 | 110-8285-03 | 1 | Angle-Seal |
| 7 | 110-8287 | 1 | Bulb-Seal |
| 8 | 110-9795 | 1 | Support-Hood |
| 8:2 | 110-9781 | 1 | Decal-Danger |
| 9 | 3274-39 | 4 | Screw-HSBH |
| 10 | 3229-11 | 3 | Screw-CARR |
| 11 | 112-1694 | 1 | Seal-Bulb |

| Ref. | Part Number | Qty. | Description |
|---|---|---|---|
| 12 | 103-2898 | 2 | Latch-Rubber |
| 13 | 3256-2 | 4 | Washer-Flat |
| 14 | 32104-95 | 2 | Screw-HWH |
| 15 | 3290-255 | 1 | Pin-Cotter, Hair |
| 16 | 110-8291 | 1 | Rod-Prop, Hood |
| 17 | 237-136 | 1 | Grommet |
| 18 | 3272-6 | 1 | Pin-Cotter |
| 19 | 110-8288 | 2 | Seal-Foam |
| 20 | 104-7201 | 11 | Nut-Flange, NI |
| 21 | 108-9811 | 1 | Support-Rod, Prop |
| 22 | 3234-33 | 8 | Screw-HHF |
| 23 | 117-2382 | 17 | Plug-Plastic |

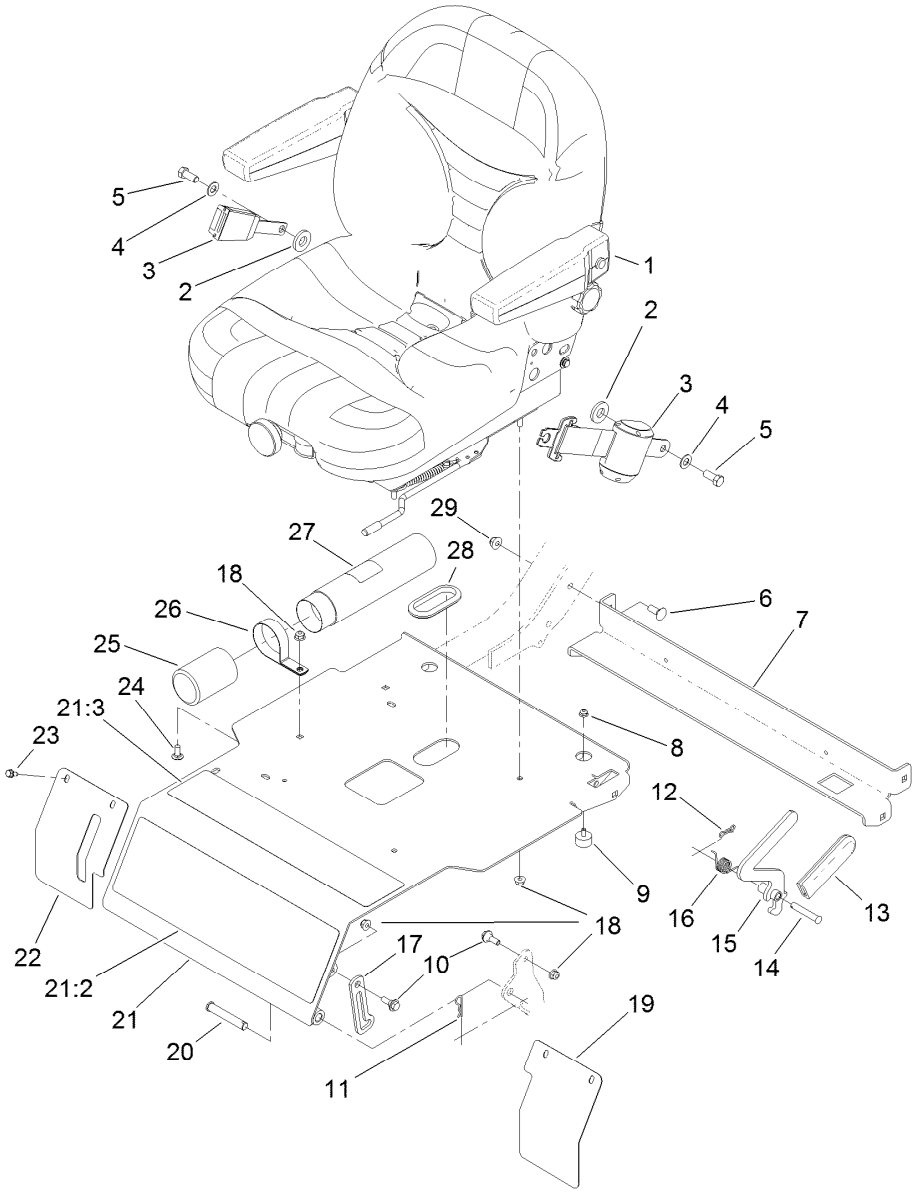


# Seat and Seat Plate Assembly

| Ref. | Part Number | Qty. | Description |
|---|---|---|---|
| 1 | 107-2286 | 1 | Seat |
| 2 | 99-7667 | 2 | Washer-Flat |
| 3 | 110-0413 | 1 | Seatbelt-Retractable |
| 4 | 3256-25 | 2 | Washer-Flat |
| 5 | 3212-4 | 2 | Screw-HH |
| 6 | 3231-2 | 4 | Bolt-CARR |
| 7 | 120-0095-03 | 1 | Support-Seat |
| 8 | 104-7201 | 2 | Nut-Flange, NI |
| 9 | 240-14 | 2 | Bumper-Rubber |
| 10 | 116-2670 | 2 | Screw-Shoulder |
| 11 | 3290-467 | 2 | Pin-Hair |
| 12 | 119-1415 | 1 | Pin-Cotter, Locking |
| 13 | 1-633268 | 1 | Grip-Lever |
| 14 | 86-2130 | 1 | Pin-Clevis |
| 15 | 121-3390-03 | 1 | Lever-Seat |
| 16 | 121-3386 | 1 | Spring-Torsion |

| Ref. | Part Number | Qty. | Description |
|---|---|---|---|
| 17 | 130-8754 | 1 | Prop-Seat |
| 18 | 104-8300 | 8 | Nut-Flange, NI |
| 19 | 130-8767-03 | 1 | Cover-LH |
| 20 | 283-55 | 2 | Pin-Clevis |
| 21 | 130-8749 | 1 | Seat Plate ASM |
| 21:2 | 120-9195 | 1 | Decal-Safety |
| 21:3 | 120-9196 | 1 | Decal-Console, Top (Ce) |
| 22 | 130-8768-03 | 1 | Cover-RH |
| 23 | 32144-10 | 4 | Screw-HWH |
| 24 | 3230-23 | 2 | Screw-CARR |
| 25 | 104-7048 | 1 | Cap-Housing |
| 26 | 2412-133 | 2 | R-Clamp |
| 27 | 104-7050 | 1 | Tube-Manual |
| 28 | 237-164 | 1 | Grommet |
| 29 | 104-8301 | 4 | Nut-Flange, NI |

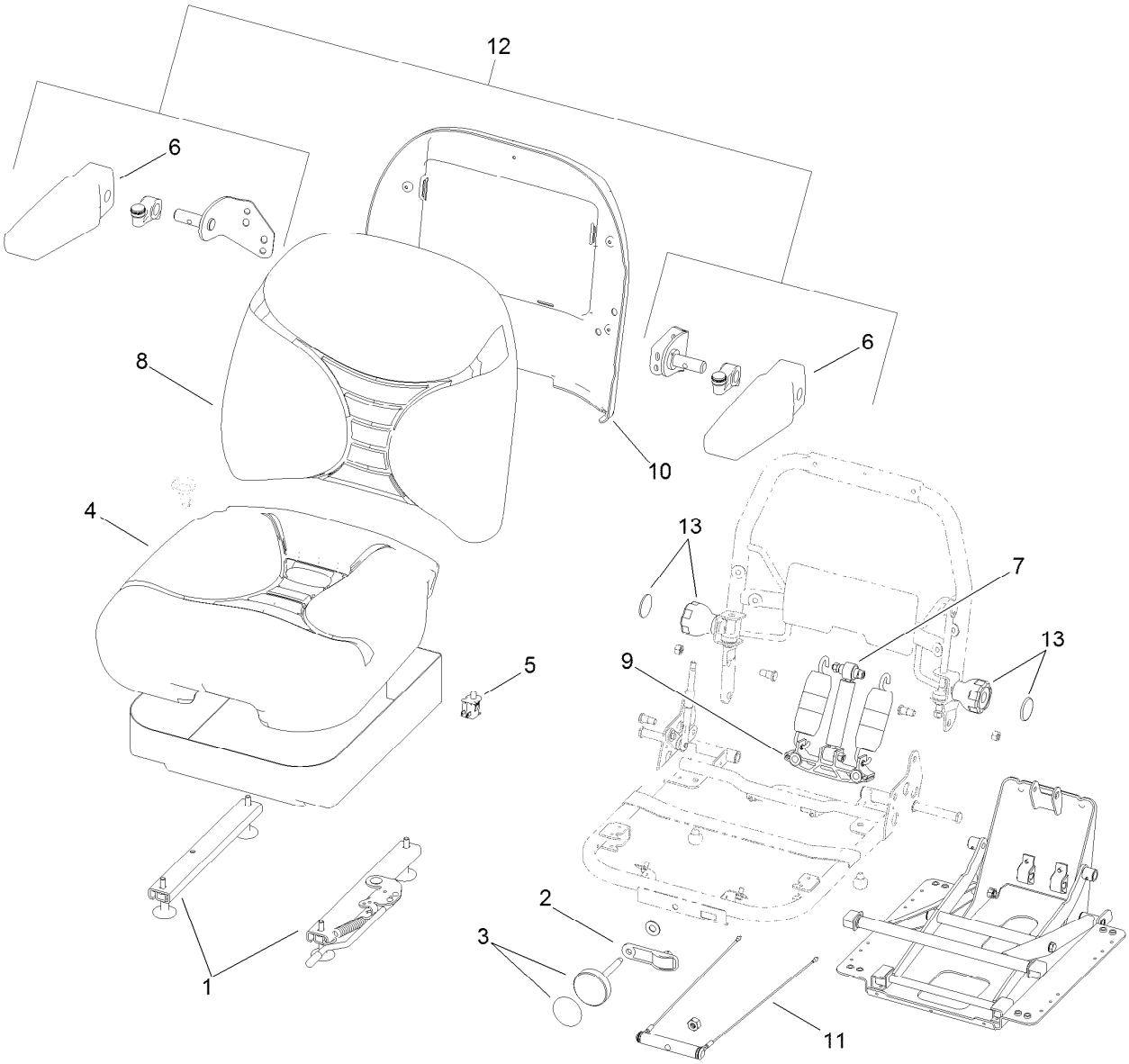


# Seat Assembly No. 107-2286

| Ref. | Part Number | Qty. | Description |
|---|---|---|---|
| 1 | 107-1880 | 1 | Seat Track Kit |
| 2 | 107-1885 | 1 | Weight Indicator Kit |
| 3 | 121-9431 | 1 | Knob Kit |
| 4 | 107-1883 | 1 | Bottom Cushion Kit |
| 5 | 82-2190 | 1 | Switch-Bail |
| 6 | 107-1887 | 2 | Pad-Armrest |
| 7 | 107-1884 | 1 | Shock Absorber Kit |
| 8 | 107-1882 | 1 | Back Cushion Kit |
| 9 | 109-3343 | 1 | Spring And Saddle Kit |
| 10 | 109-3344 | 1 | Back Panel Kit |
| 11 | 109-3345 | 1 | Weight Adjust Kit |
| 12 | 121-9415 | 1 | Armrest Kit |
| 13 | 121-9432 | 2 | Adjust Knob Kit |

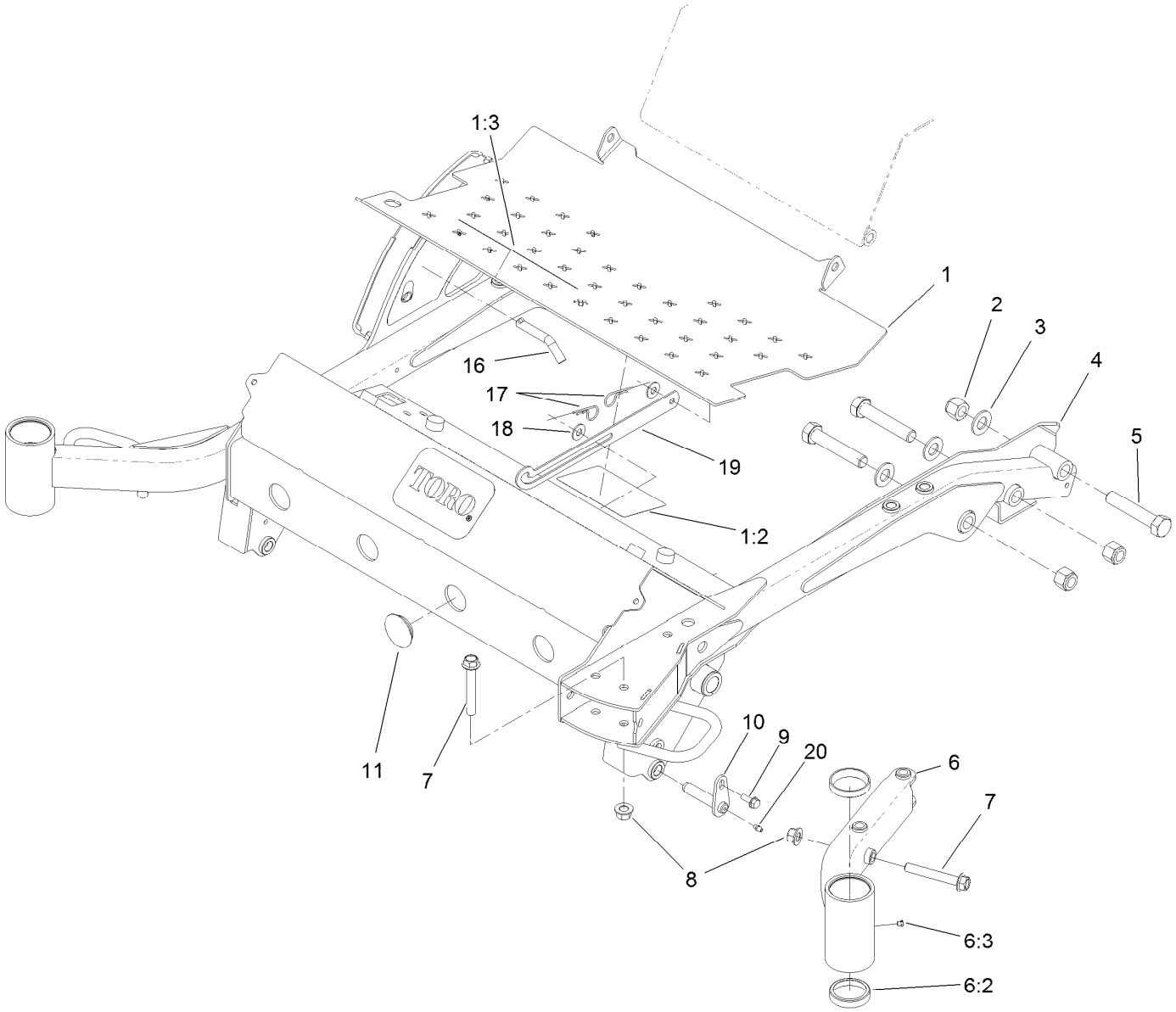


# Floorplate and Carrier Frame Assembly

| Ref. | Part Number | Qty. | Description |
|---|---|---|---|
| 1 | 120-9165 | 1 | Floorplate ASM |
| 1:2 | 112-1461 | 1 | Decal-Routing, Belt |
| 1:3 | 107-1866 | 1 | Decal-Danger, Slope |
| 2 | 3296-51 | 5 | Nut-Lock, NI |
| 3 | 92-5836 | 5 | Washer |
| 4 | 121-3356 | 1 | Carrier Frame ASM |
| 5 | 328-7 | 5 | Screw-HH |
| 6 | 121-3340 | 1 | Castor Arm ASM |
| 6:2 | 254-107 | 2 | Cup-Bearing, Tapered |
| 6:3 | 1-811010 | 1 | Plug |

| Ref. | Part Number | Qty. | Description |
|---|---|---|---|
| 7 | 114-8419 | 3 | Screw-HHF |
| 8 | 99-5107 | 3 | Nut-Lock |
| 9 | 32144-41 | 2 | Screw-Taptite |
| 10 | 112-1602 | 2 | Pin-Retainer |
| 11 | 121-3397 | 4 | Plug-Grommet |
| 16 | 112-9544 | 1 | Pin-HOC |
| 17 | 3290-255 | 2 | Pin-Cotter, Hair |
| 18 | 3256-4 | 2 | Washer-Flat |
| 19 | 121-3394-03 | 1 | Prop-Floor |
| 20 | 302-5 | 2 | Fitting-Grease |

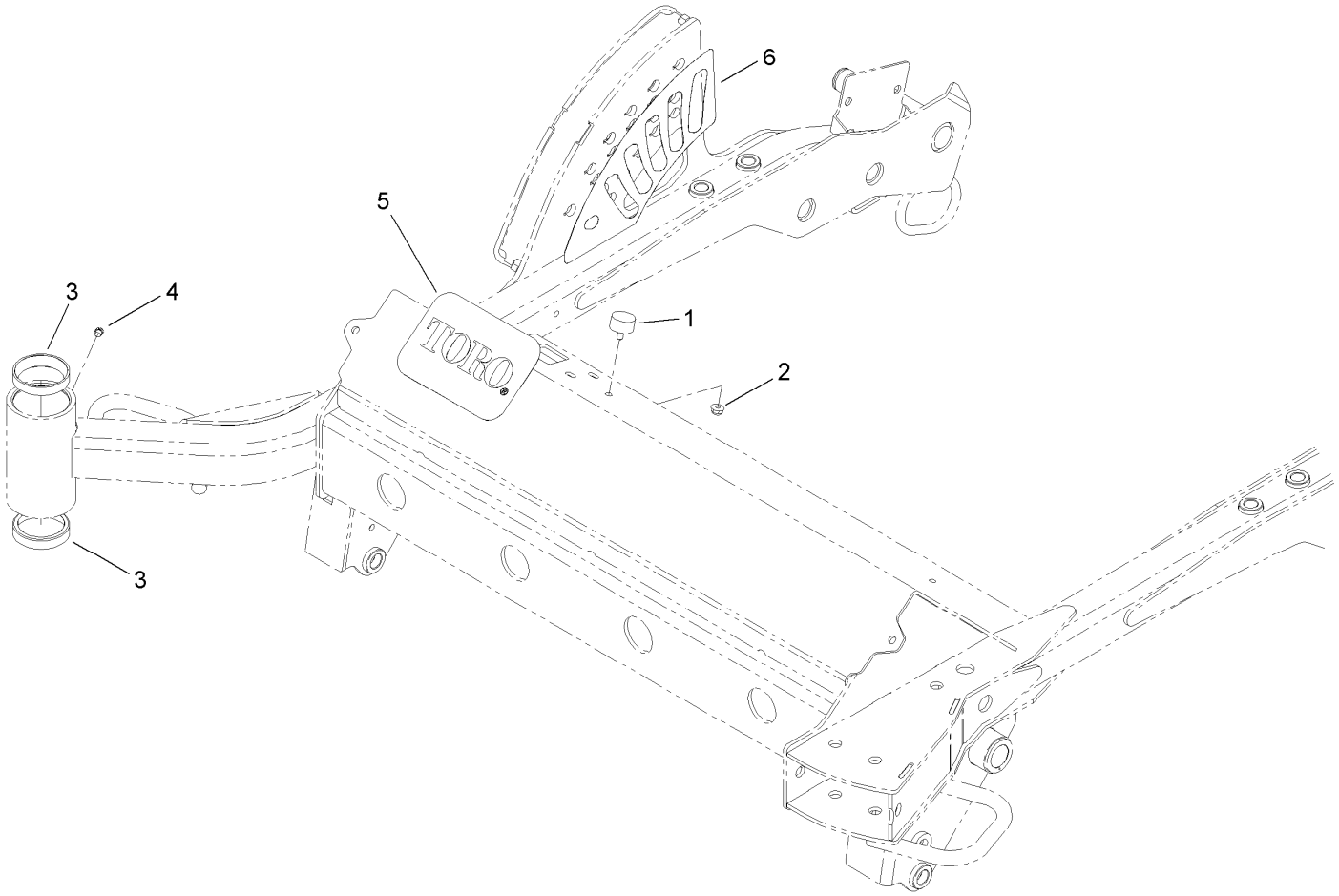


# Carrier Frame Assembly No. 121-3356

| *Ref.* | *Part Number* | *Qty.* | *Description* |
|---|---|---|---|
| 1 | 240-14 | 4 | Bumper-Rubber |
| 2 | 104-7201 | 4 | Nut-Flange, NI |
| 3 | 254-107 | 2 | Cup-Bearing, Tapered |
| 4 | 1-811010 | 1 | Plug |
| 5 | 99-4693 | 1 | Decal |
| 6 | 127-6519 | 1 | Decal-HOC |

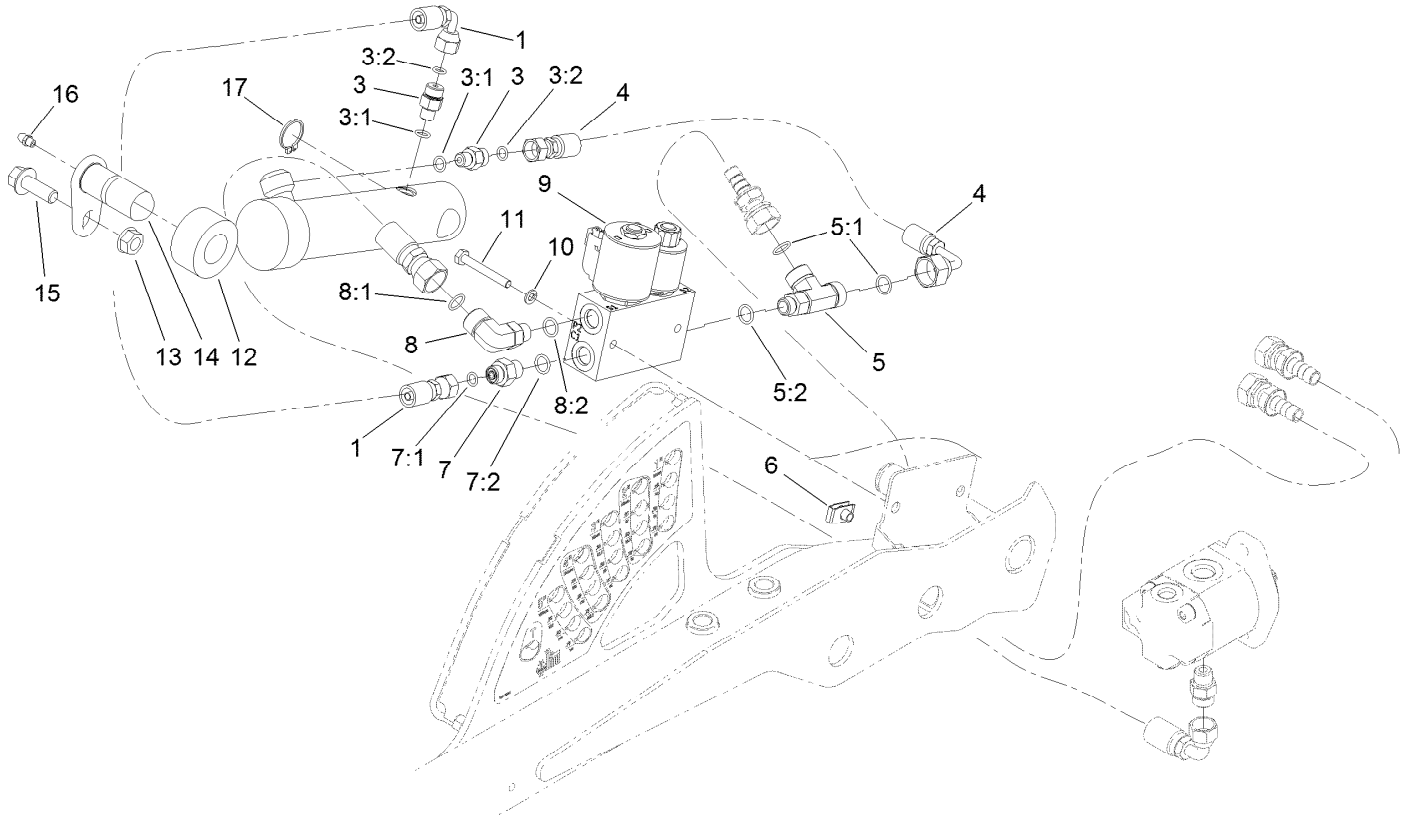


# Lift Valve and Cylinder Assembly

| Ref. | Part Number | Qty. | Description |
|---|---|---|---|
| 1 | 127-4908 | 1 | Hose-HYD |
| 3 | 340-92 | 2 | Fitting-HYD, Straight |
| 3:1 | 237-78 | 1 | O-Ring |
| 3:2 | 237-21 | 1 | O-Ring |
| 4 | 127-4909 | 1 | Hose-HYD |
| 5 | 110-0064 | 1 | Fitting-Tee |
| 5:1 | 237-30 | 2 | O-Ring |
| 5:2 | 237-42 | 1 | O-Ring |
| 6 | 107069 | 2 | Clip |
| 7 | 340-1 | 1 | Fitting-HYD, Straight |
| 7:1 | 237-21 | 1 | O-Ring |
| 7:2 | 237-42 | 1 | O-Ring |

| Ref. | Part Number | Qty. | Description |
|---|---|---|---|
| 8 | 340-99 | 1 | Fitting-HYD, 90 DEG |
| 8:1 | 237-30 | 1 | O-Ring |
| 8:2 | 237-42 | 1 | O-Ring |
| 9 | 131-1934 | 1 | Deck Lift Valve ASM |
| 10 | 3253-3 | 2 | Washer-Lock |
| 11 | 321-11 | 2 | Screw-HH |
| 12 | 110-9834 | 1 | HYD Cylinder ASM |
| 13 | 32128-37 | 1 | Nut-HF |
| 14 | 125-1910 | 1 | Pin-Pivot |
| 15 | 3234-15 | 1 | Screw-HHF |
| 16 | 302-5 | 1 | Fitting-Grease |
| 17 | 32151-36 | 1 | Ring-Retaining |

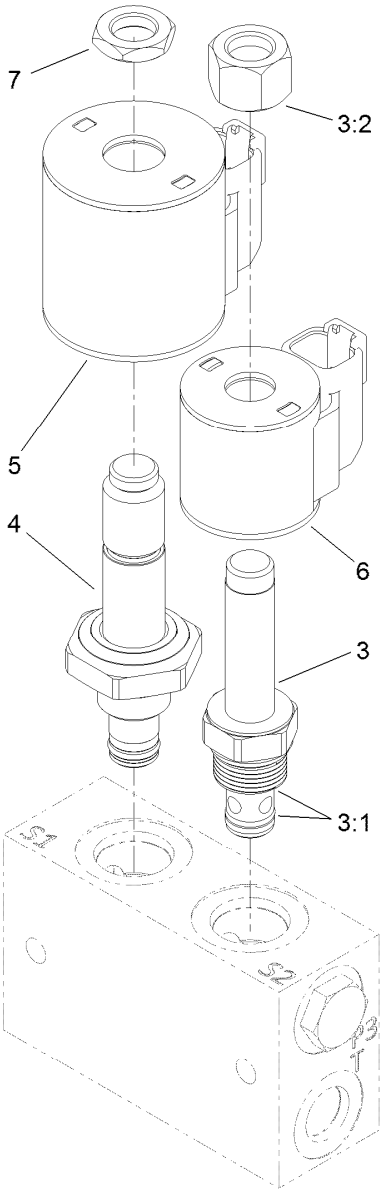


# Valve Assembly No. 131-1934

| Ref. | Part Number | Qty. | Description |
|---|---|---|---|
| 3 | 107-7517 | 1 | Valve-Solenoid |
| 3:1 | 105-9156 | 1 | Seal Kit |
| 3:2 | 107-7812 | 1 | Nut-Solenoid |
| 4 | 131-1935 | 1 | Valve-Solenoid |
| 5 | 115-3021 | 1 | Coil-12V |
| 6 | 119-8036 | 1 | E Coil-12 Vdc |
| 7 | 110-2634 | 1 | Nut-Coil |

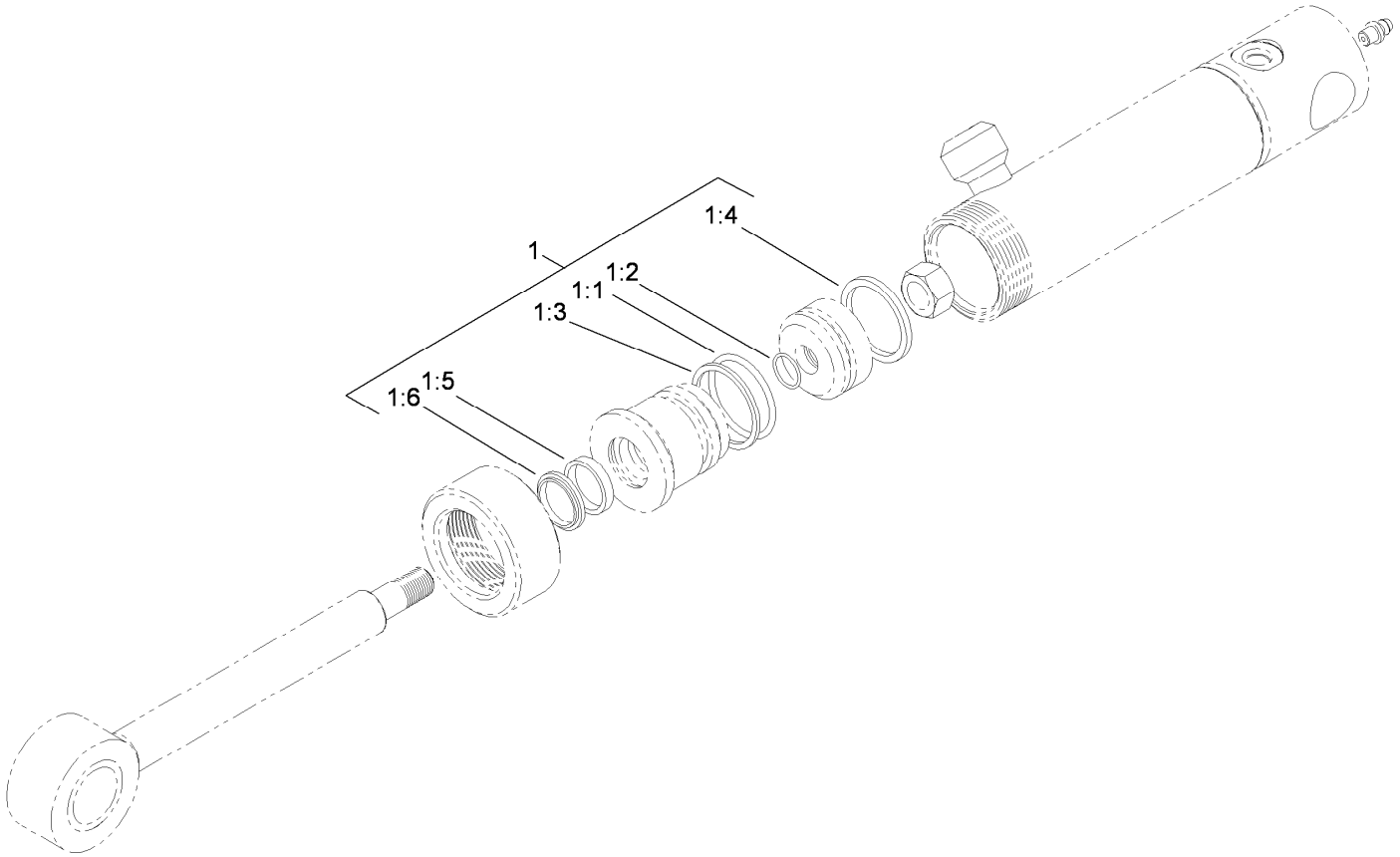


# Hydraulic Cylinder Assembly No. 110-9834

| *Ref.* | *Part Number* | *Qty.* | *Description* |
|---|---|---|---|
| 1 | 112-6353 | 1 | Seal Kit |
| 1:1 | | 1 | O-Ring ● |
| 1:2 | | 1 | O-Ring ● |
| 1:3 | | 1 | Backup ● |
| 1:4 | | 1 | Seal-Bp ● |
| 1:5 | | 1 | Seal-Rod ● |
| 1:6 | | 1 | Seal-Dust ● |

● Not serviced separately

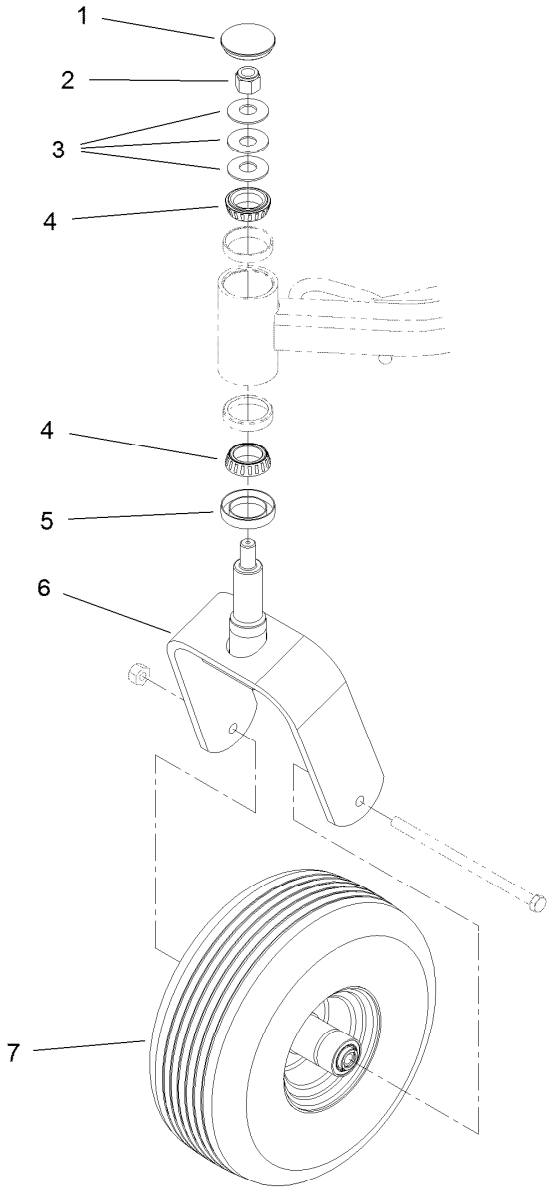


# Caster Wheel Assembly

| Ref. | Part Number | Qty. | Description |
|---|---|---|---|
| 1 | 108-9950 | 2 | Cap-Grease |
| 2 | 3296-51 | 2 | Nut-Lock, NI |
| 3 | 108-9957 | 6 | Washer-Belleville |
| 4 | 254-106 | 4 | Cone-Bearing, Tapered |
| 5 | 69-2980 | 2 | Seal |
| 6 | 108-9946-03 | 2 | Fork-Caster |
| 7 | 108-9954 | 2 | Caster Wheel ASM |

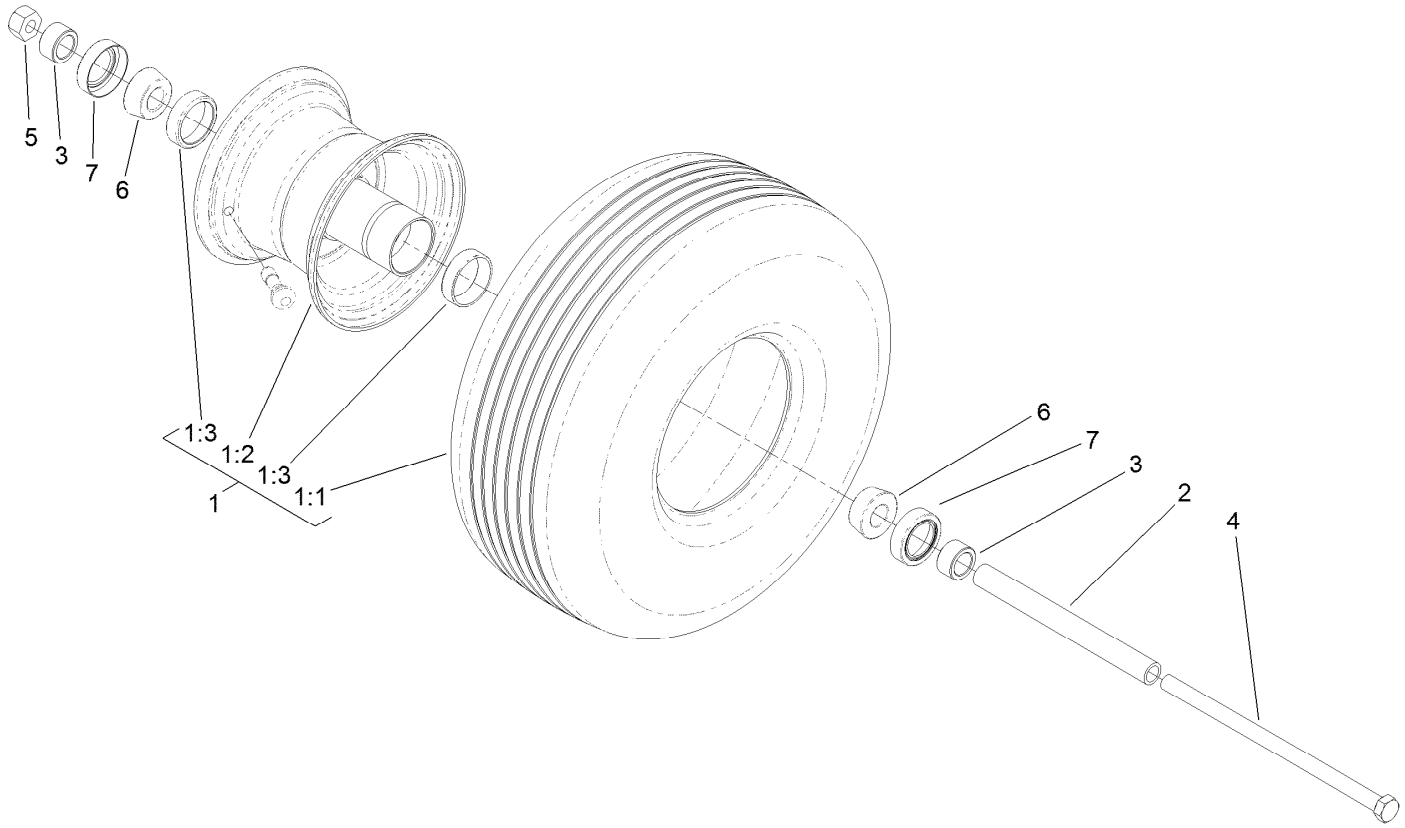


# Caster Wheel Assembly No. 108-9954

| *Ref.* | *Part Number* | *Qty.* | *Description* |
|---|---|---|---|
| 1 | 108-9956 | 1 | Tire And Wheel ASM |
| 1:1 | 108-9955 | 1 | Tire |
| 1:2 | 1-633987 | 1 | Wheel |
| 1:3 | 1-633584 | 2 | Bearing-Cup |
| 2 | 1-633959 | 1 | Spacer-Caster, Front |
| 3 | 1-633581 | 2 | Spacer-Bearing |
| 4 | 325-39 | 1 | Screw-HH |
| 5 | 3296-25 | 1 | Nut-Lock, NI |
| 6 | 1-633585 | 2 | Bearing-Cone, Taper |
| 7 | 1-633580 | 2 | Seal-Bearing |

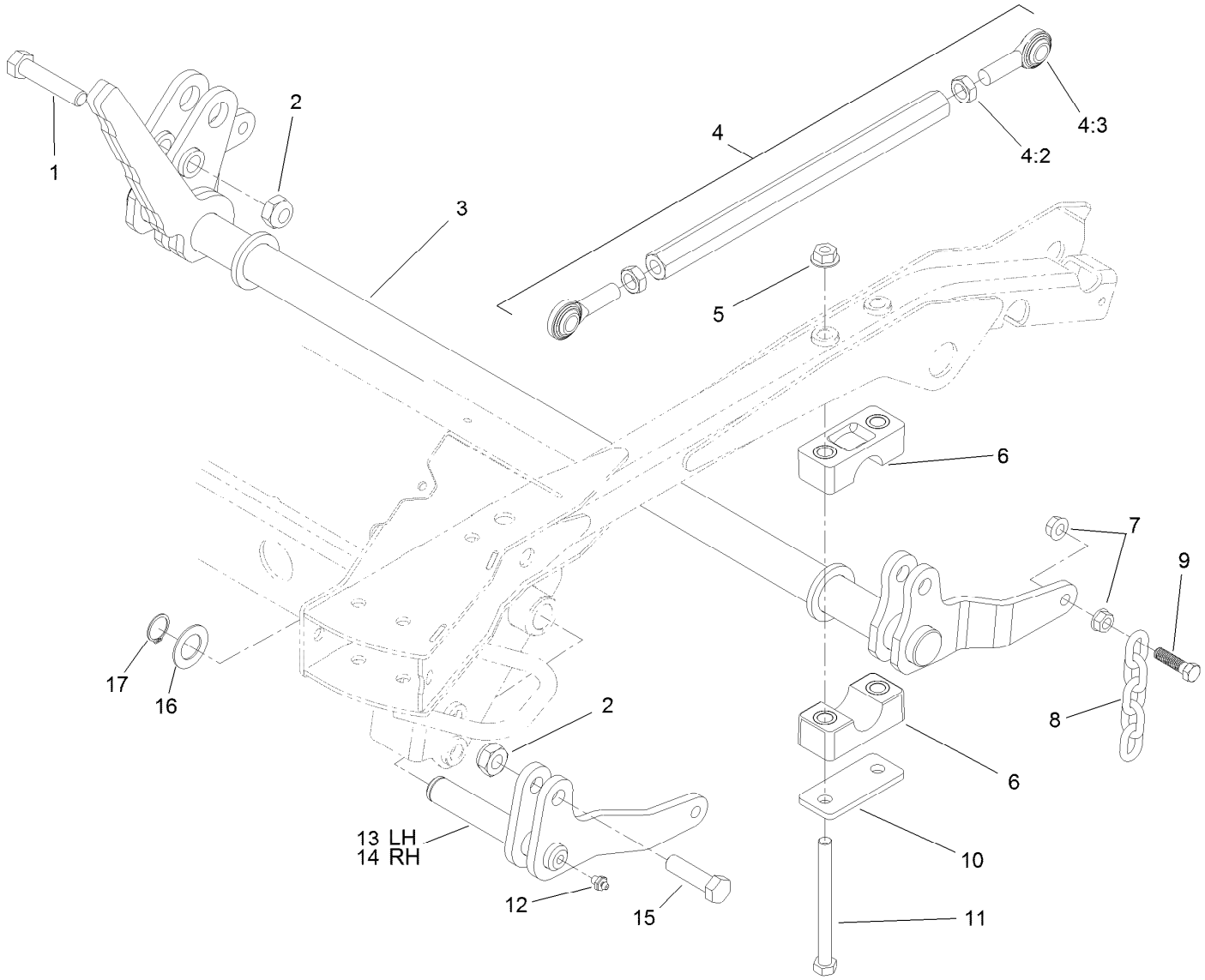


# Deck Lift Assembly

| Ref. | Part Number | Qty. | Description |
|---|---|---|---|
| 1 | 104-5895 | 1 | Screw-HH |
| 2 | 3296-61 | 4 | Nut-Lock |
| 3 | 117-9220-03 | 1 | Shaft-Lift |
| 4 | 114-4059 | 2 | Link ASM |
| 4:2 | 3220-6 | 2 | Nut-Jam |
| 4:3 | 1-633029 | 2 | Balljoint-Spherical |
| 5 | 32128-49 | 4 | Nut-HHF |
| 6 | 115-0491 | 4 | Cap-Bearing |
| 7 | 32128-37 | 8 | Nut-HF |
| 8 | 1-633447 | 4 | Chain-Lift, Deck |

| Ref. | Part Number | Qty. | Description |
|---|---|---|---|
| 9 | 103-1898 | 4 | Screw-HH |
| 10 | 117-2903 | 2 | Plate-Bearing |
| 11 | 325-22 | 4 | Screw-HH |
| 12 | 302-2 | 2 | Fitting-Grease |
| 13 | 110-9818-03 | 1 | Lift-LH |
| 14 | 110-9820-03 | 1 | Lift-RH |
| 15 | 327-22 | 3 | Screw-HH |
| 16 | 69-9010 | 2 | Washer |
| 17 | 32151-29 | 2 | Ring-Retaining |

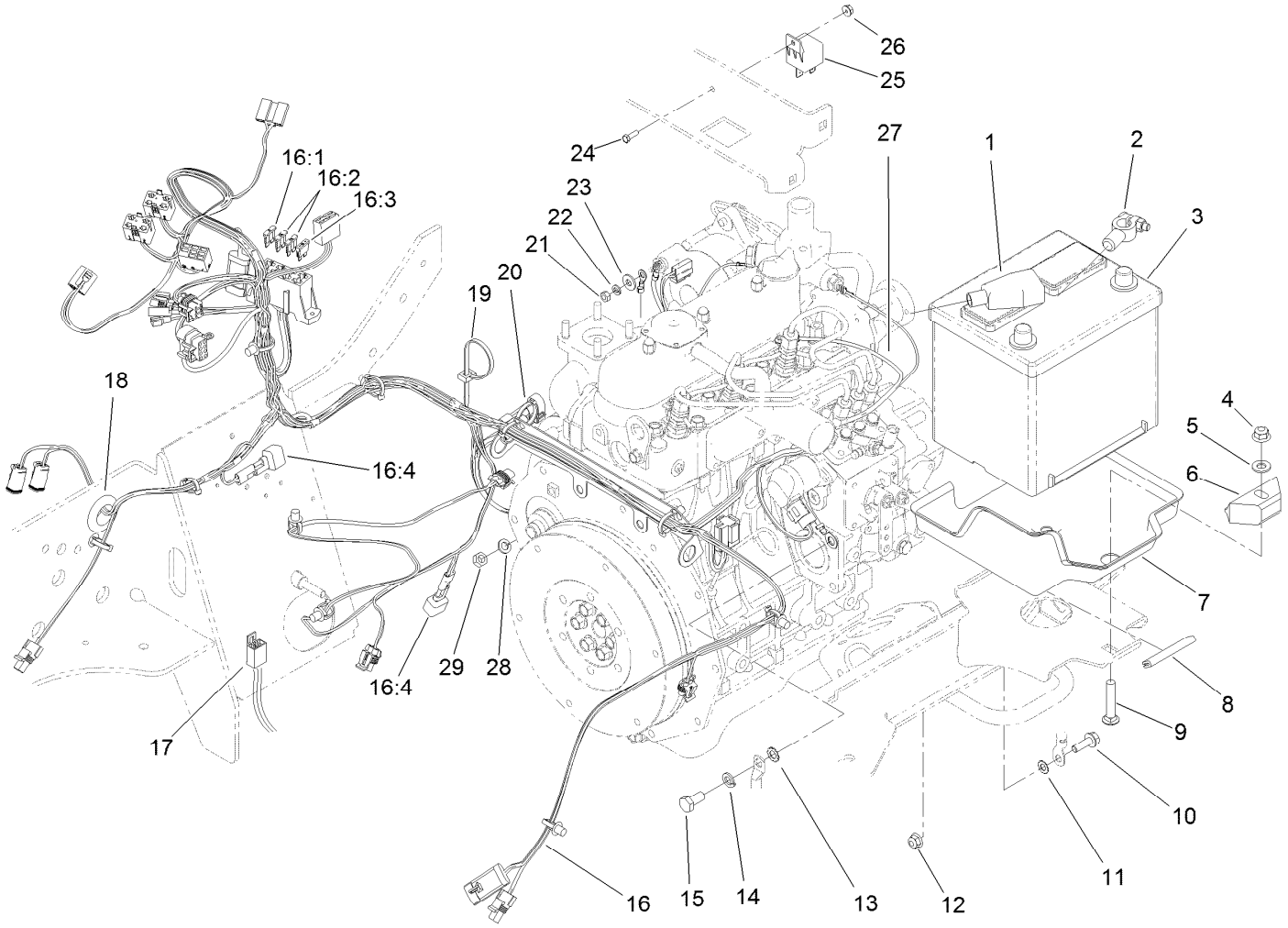


# Electrical Assembly

| Ref. | Part Number | Qty. | Description |
|---|---|---|---|
| 1 | 119-1796 | 1 | Cable-Battery, Positive |
| 2 | 105-0040 | 1 | Cable-Battery, Negative |
| 3 | 106-5187 | 1 | Battery-Dry |
| 4 | 104-8301 | 1 | Nut-Flange, NI |
| 5 | 3256-24 | 1 | Washer-Flat |
| 6 | 66-2490 | 1 | Retainer-Battery |
| 7 | 108-9928 | 1 | Tray-Battery |
| 8 | 110-8276 | 1 | Trim-Hold Down, Battery |
| 9 | 3231-6 | 1 | Screw-CARR |
| 10 | 3234-17 | 1 | Screw-HHF |
| 11 | 3255-8 | 1 | Washer-Lock |
| 12 | 104-8300 | 1 | Nut-Flange, NI |
| 13 | 3255-9 | 1 | Washer-Lock |
| 14 | 48-9590 | 1 | Washer-Lock |
| 15 | 63-7790 | 1 | Screw-Cap |
| 16 | 119-4380 | 1 | Harness-Wire, Main |
| 16:1 | 94-6710 | 1 | Fuse-2 Amp |
| 16:2 | 218-578 | 2 | Fuse-Blade, 10 Amp |
| 16:3 | 109355 | 1 | Fuse-Blade, 15 Amp |
| 16:4 | 100-4918 | 2 | Diode-Over Molded |
| 17 | 108-8657 | 1 | Harness-Wire, Seat |
| 18 | 237-165 | 1 | Grommet |
| 19 | 3290-378 | 2 | Tie-Cable |
| 20 | 32180-030 | 2 | Clip-Tie |
| 21 | 33013-00 | 1 | Nut-Hex |
| 22 | 43-5930 | 1 | Washer-Lock, Spring |
| 23 | 3256-2 | 1 | Washer-Flat |
| 24 | 3290-134 | 1 | Screw |
| 25 | 99-7435 | 1 | Relay-Power |
| 26 | 3290-148 | 1 | Nut-HF |
| 27 | 99-3441 | 1 | Harness-Wire, Fusible Link |
| 28 | 3253-4 | 1 | Washer-Lock |
| 29 | 33014-00 | 1 | Nut-Hex |

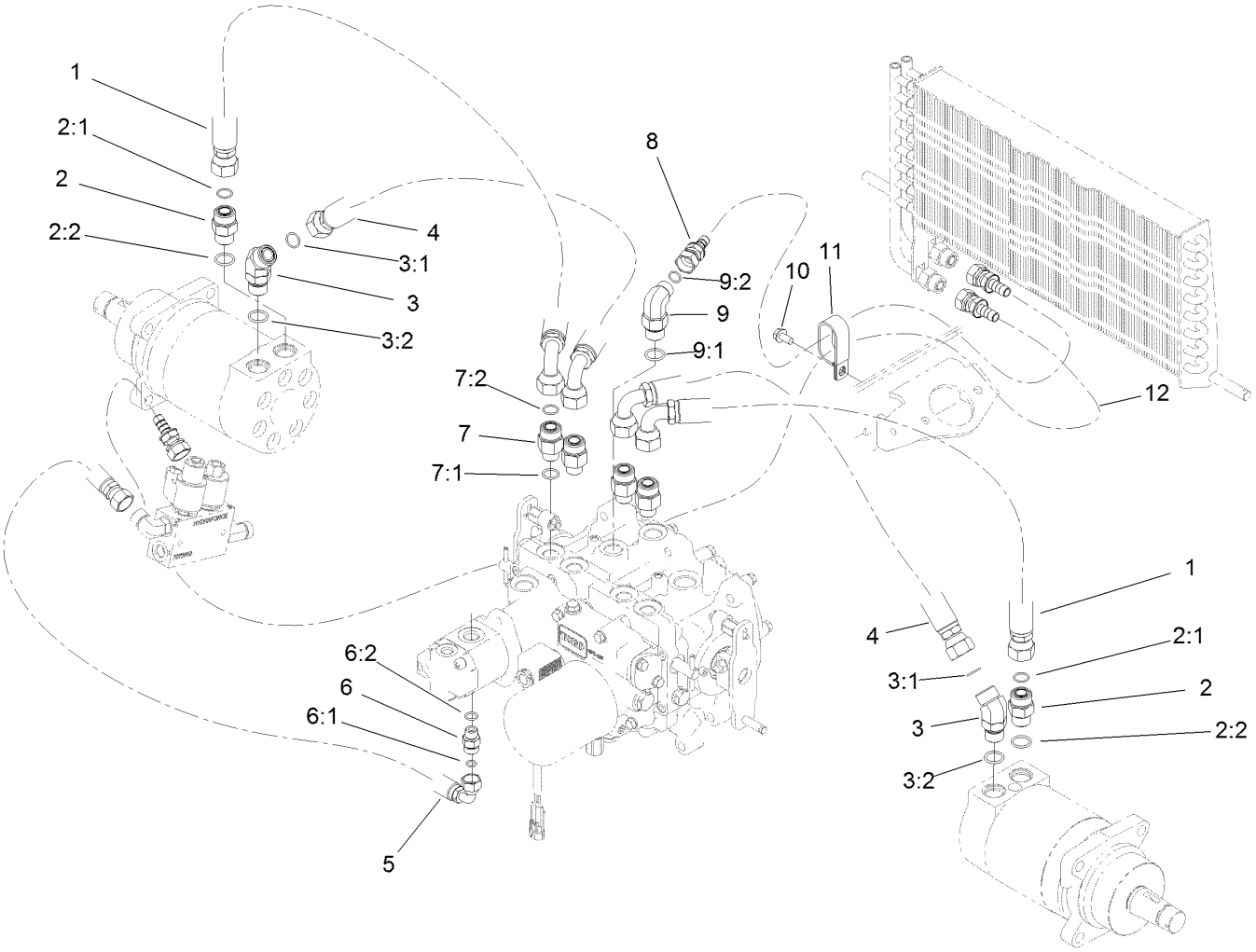


# Transmission and Oil Cooler Hydraulic Assembly

| Ref. | Part Number | Qty. | Description |
|---|---|---|---|
| 1 | 112-1683 | 2 | Hose |
| 2 | 340-7 | 2 | Adapter |
| 2:1 | 237-65 | 1 | O-Ring |
| 2:2 | 237-80 | 1 | O-Ring |
| 3 | 340-14 | 2 | Fitting-HYD, 45 DEG |
| 3:1 | 237-65 | 1 | O-Ring |
| 3:2 | 237-80 | 1 | O-Ring |
| 4 | 110-5518 | 2 | Hose |
| 5 | 127-4910 | 1 | Hose-HYD |
| 6 | 340-2 | 1 | Fitting-HYD, Straight |
| 6:1 | 237-22 | 1 | O-Ring |

| Ref. | Part Number | Qty. | Description |
|---|---|---|---|
| 6:2 | 237-42 | 1 | O-Ring |
| 7 | 340-155 | 4 | Fitting-HYD, Straight |
| 7:1 | 237-79 | 1 | O-Ring |
| 7:2 | 237-151 | 1 | O-Ring |
| 8 | 110-5542 | 1 | Hose-HYD |
| 9 | 340-105 | 1 | Fitting-HYD, 90 DEG |
| 9:1 | 237-80 | 1 | O-Ring |
| 9:2 | 237-30 | 1 | O-Ring |
| 10 | 32144-14 | 1 | Screw-HWHTF |
| 11 | 2412-137 | 1 | Clamp-R, Double |
| 12 | 110-5543 | 1 | Hose-HYD |

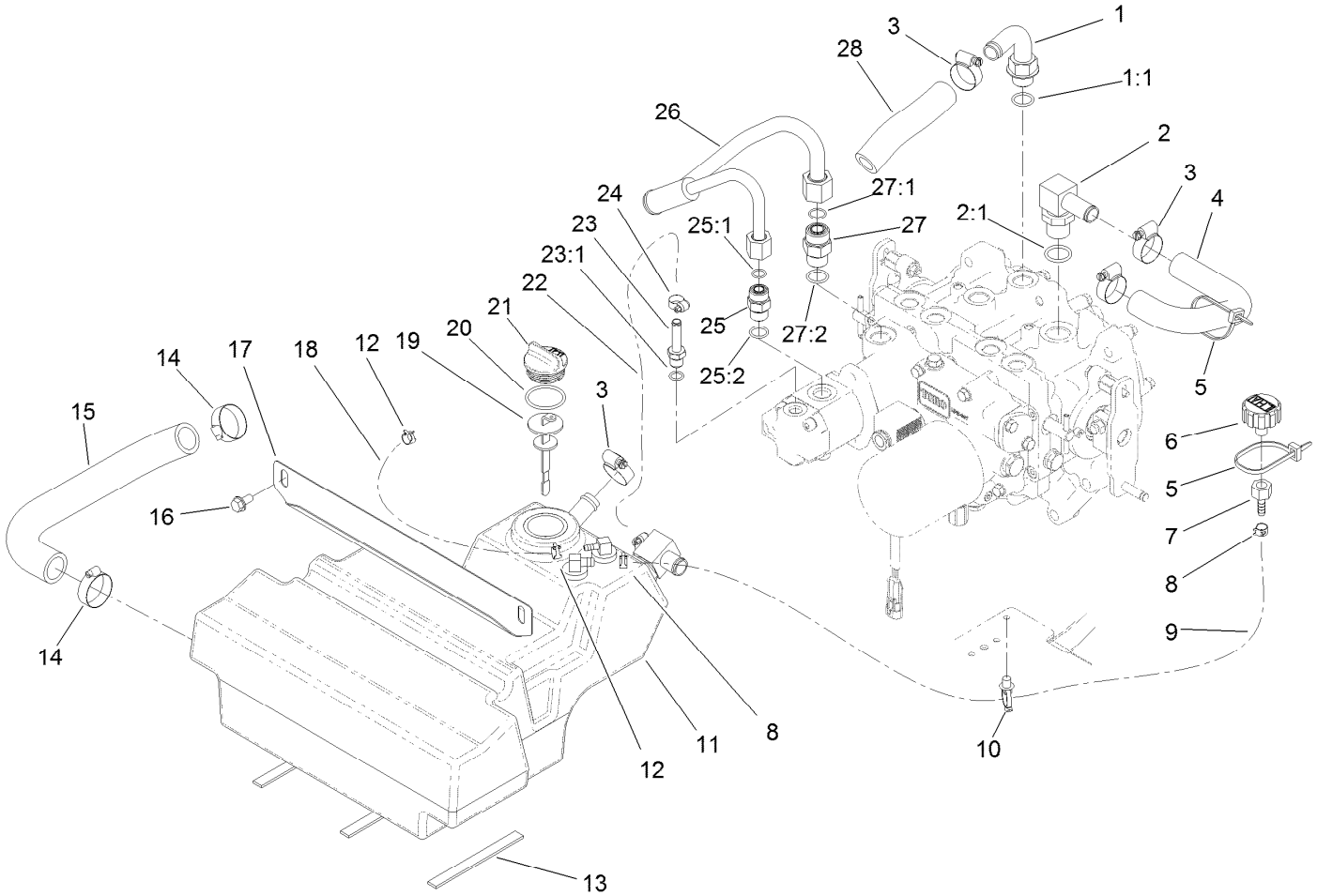


# Hydraulic Reservoir Assembly

| Ref. | Part Number | Qty. | Description |
|---|---|---|---|
| 1 | 110-5522 | 1 | Fitting-Elbow, 90 |
| 1:1 | 237-80 | 1 | O-Ring |
| 2 | 353-987 | 1 | Fitting-HYD, 90 DEG (Barbed) |
| 2:1 | 237-81 | 1 | O-Ring |
| 3 | 2412-129 | 4 | Clamp-Hose |
| 4 | 110-5524 | 1 | Hose-Return |
| 5 | 3290-379 | 2 | Tie-Cable |
| 6 | 68-6150 | 1 | Breather |
| 7 | 354-95 | 1 | Fitting-Straight |
| 8 | 92-2379 | 2 | Clamp-Hose |
| 9 | 110-9662 | 1 | Hose-Fuel |
| 10 | 32180-030 | 1 | Clip-Tie |
| 11 | 110-8237 | 1 | HYD Reservoir ASM |
| 12 | 2412-98 | 2 | Clamp-Hose |
| 13 | 120-0017 | 3 | Strip-Foam |
| 14 | 2412-34 | 2 | Clamp-Hose |
| 15 | 110-5526 | 1 | Hose-Suction |
| 16 | 32144-14 | 2 | Screw-HWHTF |
| 17 | 110-5529-03 | 1 | Support-Reservoir |
| 18 | 109-0299 | 1 | Hose-Fuel |
| 19 | 112-6365 | 1 | Dipstick |
| 20 | 94-8166 | 1 | O-Ring |
| 21 | 93-7498 | 1 | Plug-Plastic |
| 22 | 94-5625 | 1 | Hose-Overflow, Radiator |
| 23 | 353-979 | 1 | Fitting-Straight |
| 23:1 | 237-42 | 1 | O-Ring |
| 24 | 2412-108 | 2 | Clamp-Worm |
| 25 | 340-4 | 1 | Fitting-HYD, Straight |
| 25:1 | 237-30 | 1 | O-Ring |
| 25:2 | 237-79 | 1 | O-Ring |
| 26 | 110-5532 | 1 | Tube |
| 27 | 340-7 | 1 | Adapter |
| 27:1 | 237-65 | 1 | O-Ring |
| 27:2 | 237-80 | 1 | O-Ring |
| 28 | 112-1680 | 1 | Hose-HYD |

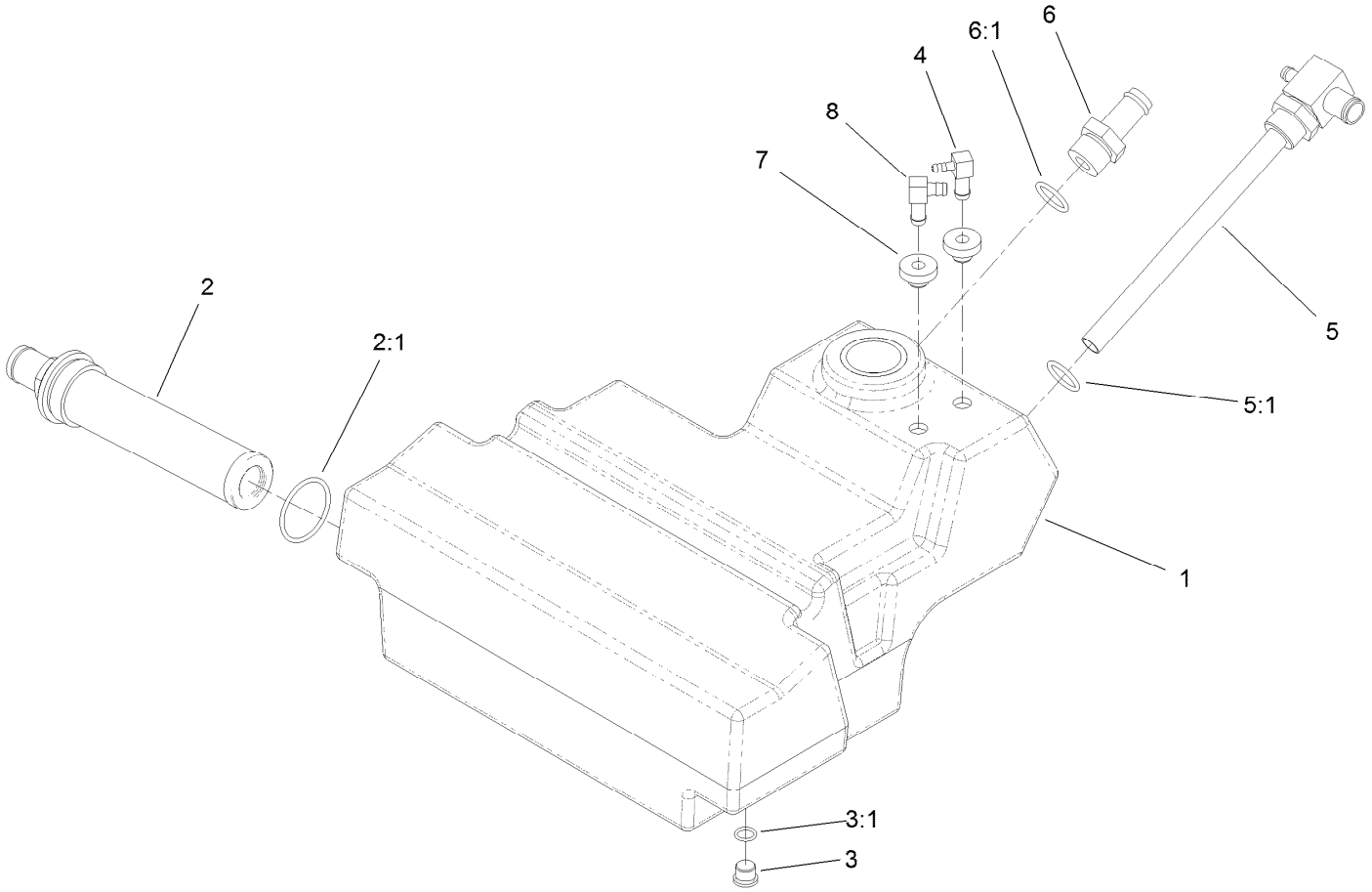


# Hydraulic Reservoir Assembly No. 110-8237

| *Ref.* | *Part Number* | *Qty.* | *Description* |
|---|---|---|---|
| 1 | 108-5200 | 1 | Reservoir-HYD |
| 2 | 104-7546 | 1 | Tank Strainer ASM |
| 2:1 | 340-136 | 1 | O-Ring |
| 3 | 353-989 | 1 | Plug-Hex, Hollow |
| 3:1 | 237-42 | 1 | O-Ring |
| 4 | 104-5228 | 1 | Fitting-Elbow, 90 DEG |
| 5 | 108-9894 | 1 | Fitting-Elbow, Special |
| 5:1 | 237-81 | 1 | O-Ring |
| 6 | 354-73 | 1 | Fitting-Straight |
| 6:1 | 237-81 | 1 | O-Ring |
| 7 | 46-6560 | 2 | Bushing |
| 8 | 46-6550 | 1 | Fitting-Elbow, 90 DEG |

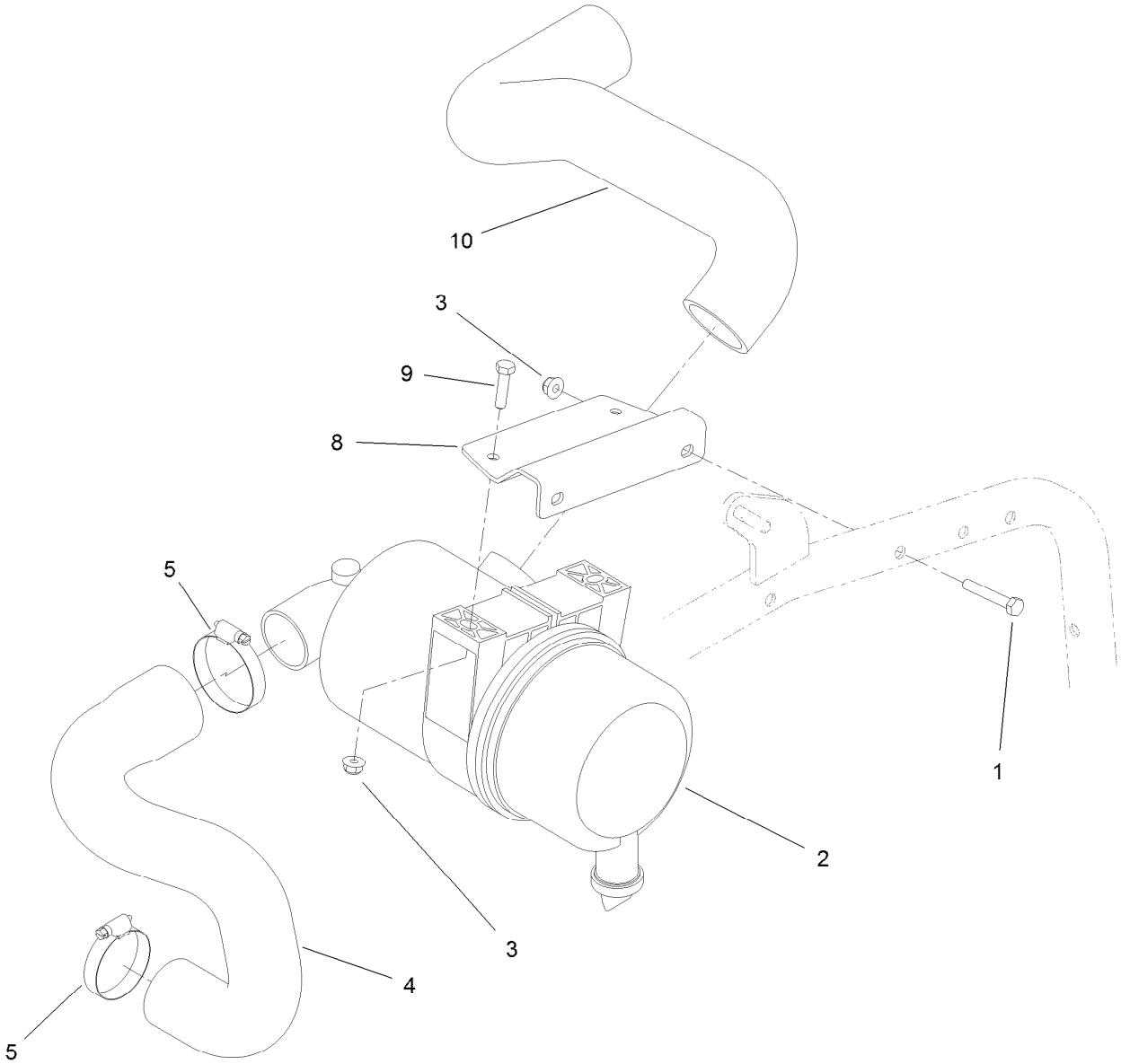


# Air Cleaner and Hose Assembly

| *Ref.* | *Part Number* | *Qty.* | *Description* |
|---|---|---|---|
| 1 | 322-10 | 2 | Screw-HH |
| 2 | 104-3428 | 1 | Air Cleaner ASM |
| 3 | 104-8300 | 4 | Nut-Flange, NI |
| 4 | 105-7236 | 1 | Hose-Inlet, Air |
| 5 | 2412-130 | 2 | Clamp-Hose |
| 8 | 108-9843-03 | 1 | Support-Cleaner, Air |
| 9 | 322-6 | 2 | Screw-HH |
| 10 | 105-7281 | 1 | Hose-Air Inlet, Upper |

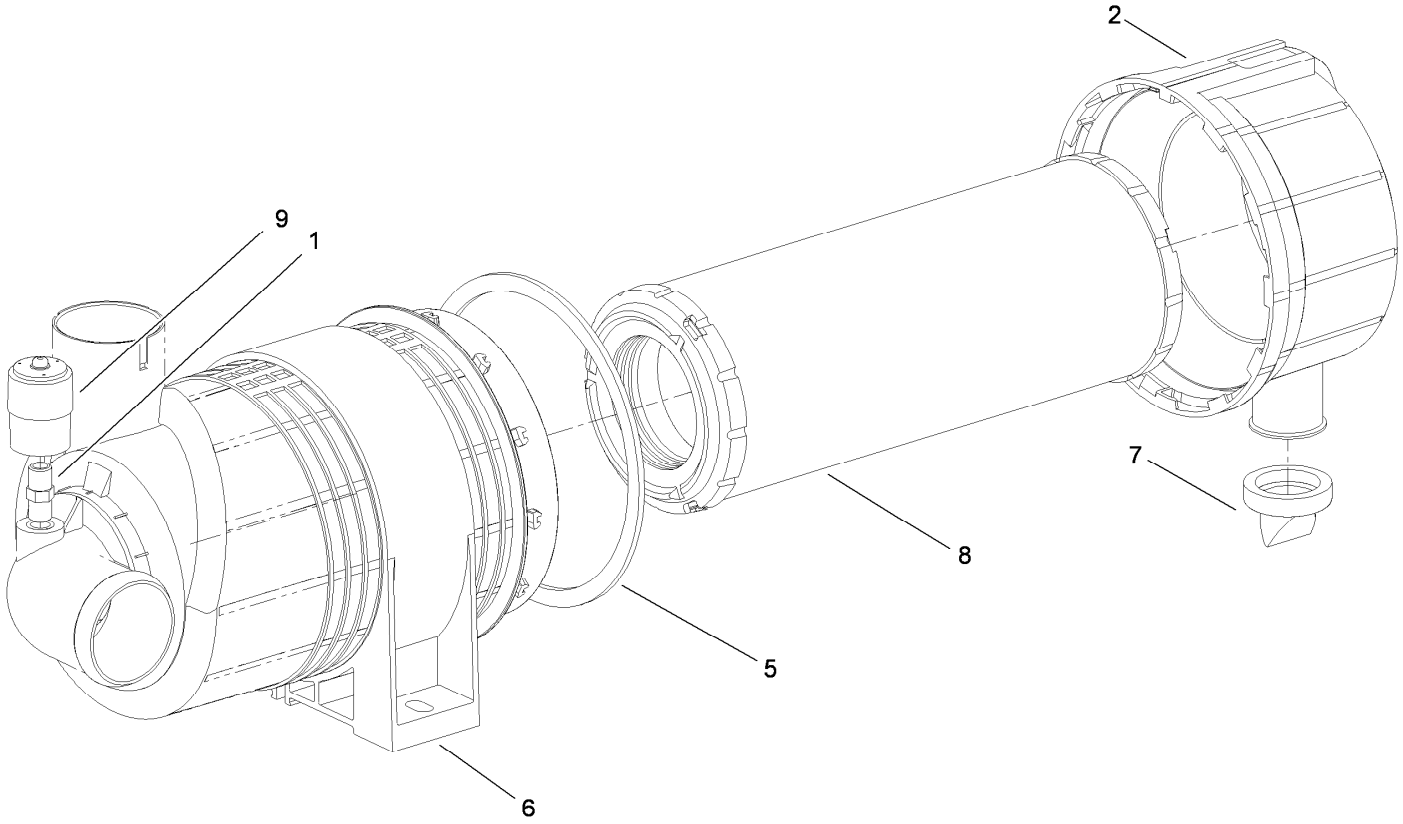


# Air Cleaner Assembly No. 104-3428

| *Ref.* | *Part Number* | *Qty.* | *Description* |
|---|---|---|---|
| 1 | 105-4292 | 1 | Nipple-Pipe |
| 2 | 104-0497 | 1 | Cover |
| 5 | 104-4897 | 1 | Gasket |
| 6 | 98-4525 | 1 | Bracket-Cleaner, Air |
| 7 | 104-0498 | 1 | Valve-Vacuator |
| 8 | 108-3810 | 1 | Filter-Air |
| 9 | 93-9164 | 1 | Indicator-Mini |

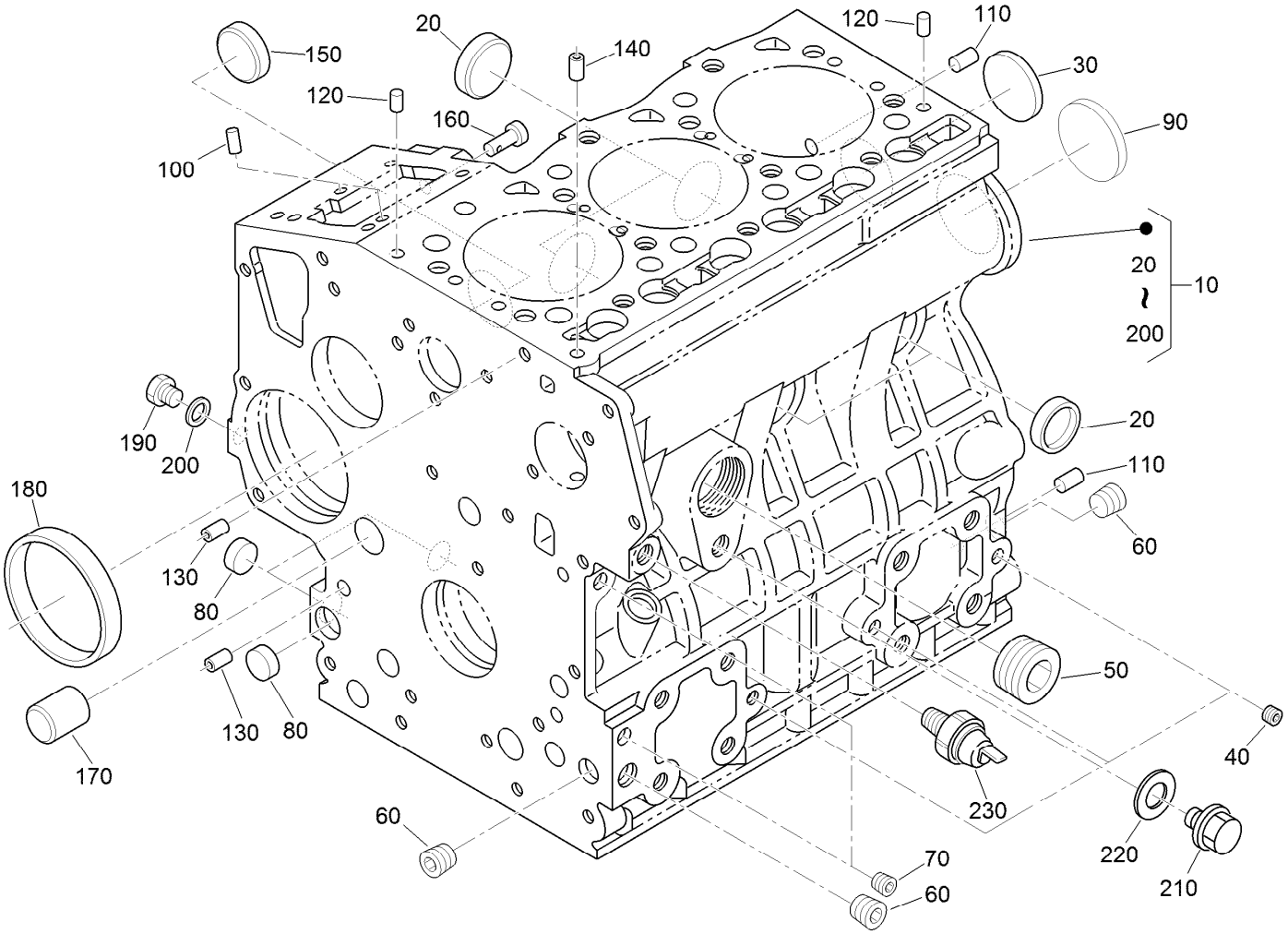


# Crankcase Assembly

| Ref. | Part Number | Qty. | Description |
|---|---|---|---|
| 10 | 115-3443 | 1 | Crankcase ASM |
| 20 | 98-9398 | 4 | Cap-Sealing |
| 30 | 98-7539 | 1 | Cap-Sealing |
| 40 | 98-9687 | 3 | Plug |
| 50 | 105-3779 | 1 | Plug |
| 60 | 98-9597 | 3 | Plug |
| 70 | 98-7487 | 2 | Plug |
| 80 | 98-9379 | 3 | Plug-Expansion |
| 90 | 98-9668 | 1 | Plug-Expansion |
| 100 | 98-9375 | 2 | Pin-Straight |
| 110 | 98-9377 | 2 | Pin-Straight |
| 120 | 98-9376 | 2 | Pin-Straight |

| Ref. | Part Number | Qty. | Description |
|---|---|---|---|
| 130 | 98-9387 | 2 | Pin-Pipe |
| 140 | 98-9539 | 1 | Pin-Pipe |
| 150 | 98-9599 | 1 | Plug |
| 160 | 98-9630 | 1 | Pin-Spring, Start |
| 170 | 98-9675 | 1 | Plug |
| 180 | 98-9656 | 1 | Bushing-Governor, Gear |
| 190 | 120-2559 | 1 | Plug |
| 200 | 98-7428 | 1 | Gasket |
| 210 | 99-3447 | 1 | Plug |
| 220 | 106-7056 | 1 | Gasket |
| 230 | 98-9416 | 1 | Switch-Oil |

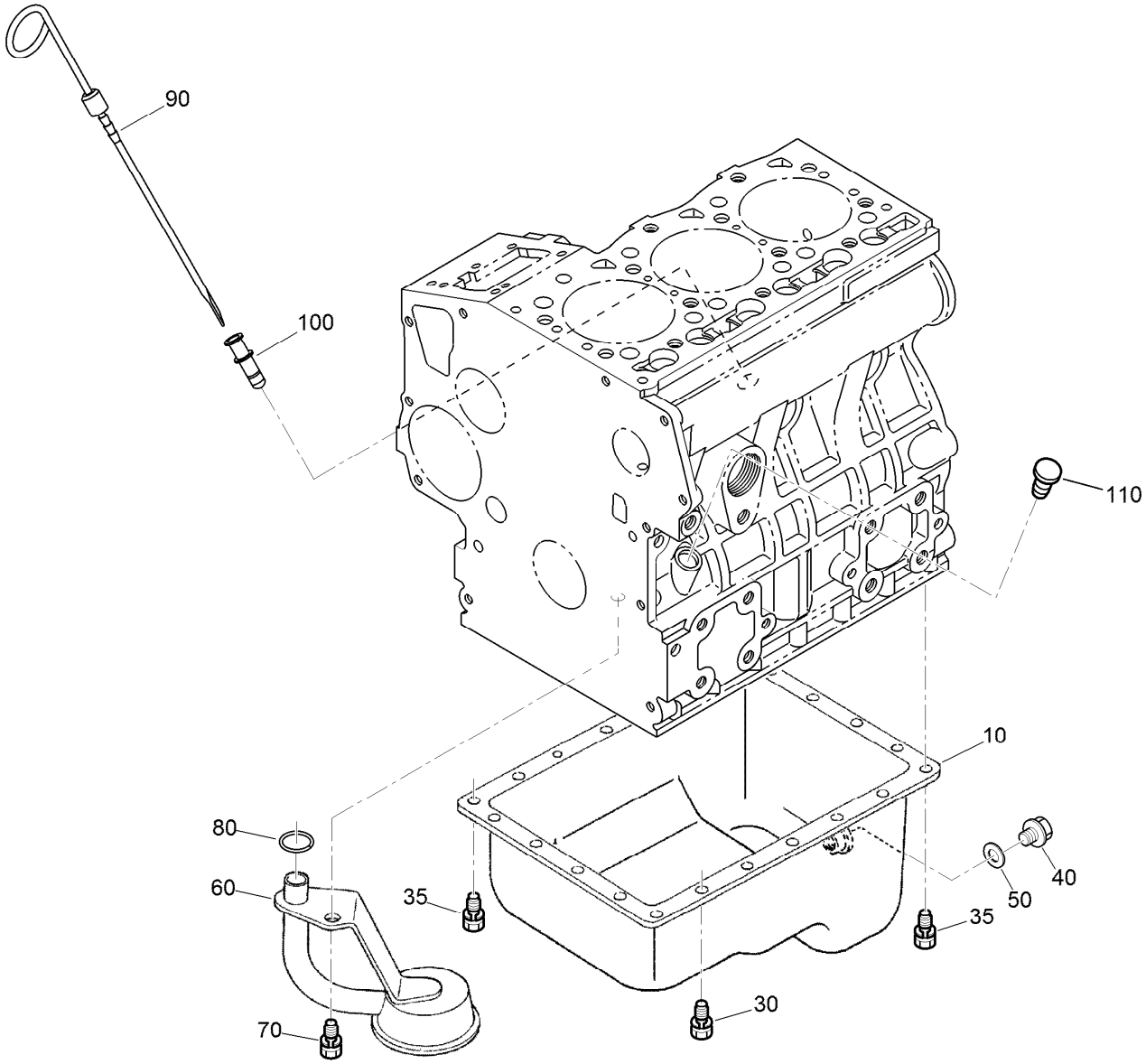


# Oil Pan and Dipstick Assembly

| *Ref.* | *Part Number* | *Qty.* | *Description* |
|---|---|---|---|
| 10 | 112-0179 | 1 | Pan-Oil |
| 30 | 98-9351 | 20 | Bolt |
| 35 | 98-9351 | 2 | Bolt |
| 40 | 114-8151 | 1 | Plug-Drain |
| 50 | 98-7524 | 1 | Gasket |
| 60 | 108-1401 | 1 | Base-Filter |
| 70 | 98-7526 | 1 | Bolt |
| 80 | 105-3776 | 1 | O-Ring |
| 90 | 104-9348 | 1 | Gauge-Oil |
| 100 | 105-4580 | 1 | Guide-Gauge, Oil |
| 110 | 110-3720 | 1 | Plug-Gauge, Oil |

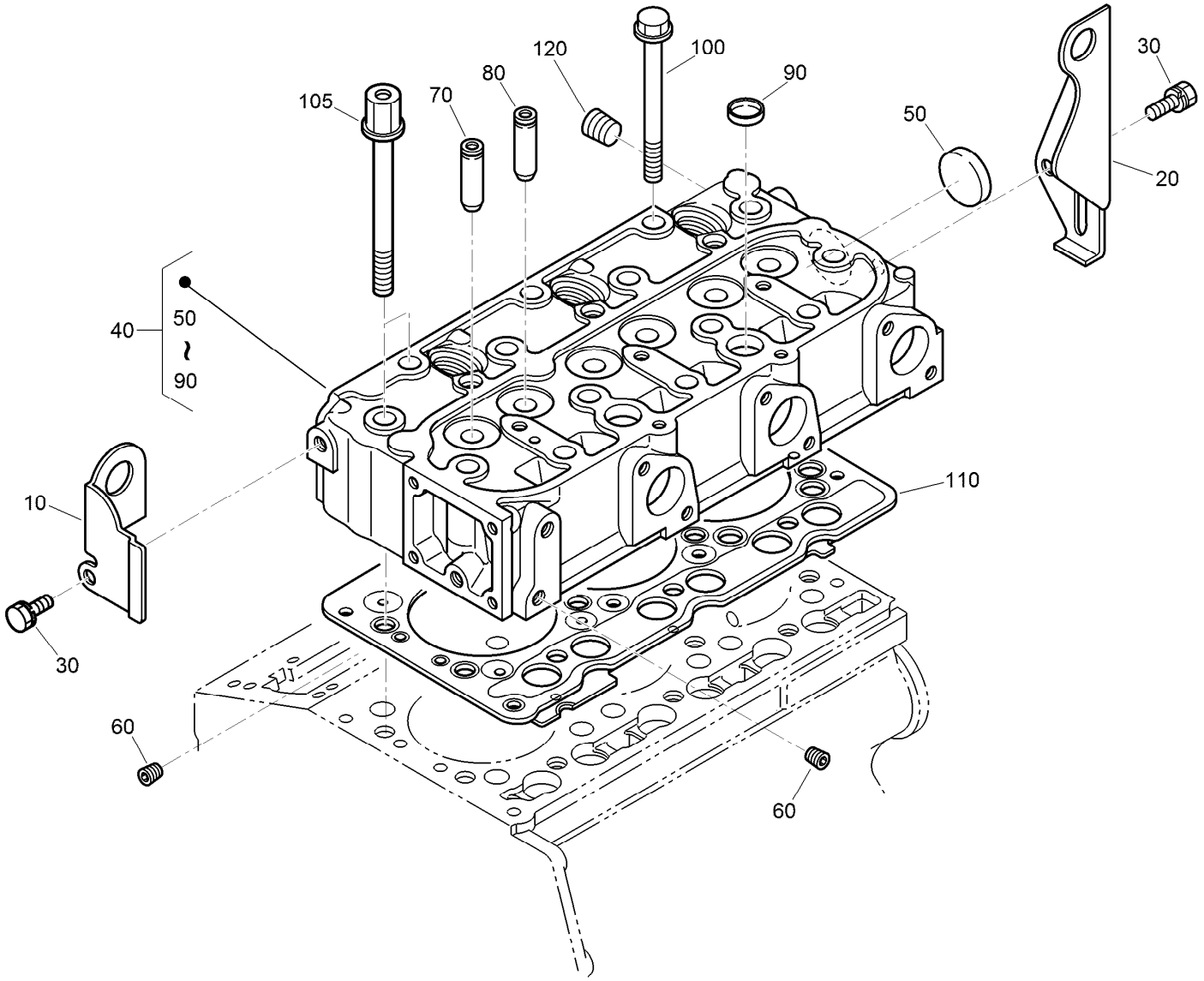


# Cylinder Head Assembly

| Ref. | Part Number | Qty. | Description |
|---|---|---|---|
| 10 | 130-1231 | 1 | Hook-Engine |
| 20 | 98-9478 | 1 | Hook-Engine |
| 30 | 100-9195 | 2 | Bolt |
| 40 | 130-1544 | 1 | Cylinder Head ASM |
| 50 | 105-3705 | 1 | Cap-Sealing |
| 60 | 98-9687 | 2 | Plug |
| 70 | 107-9066 | 3 | Guide-Valve, Inlet |
| 80 | 107-9067 | 3 | Guide-Valve, Exhaust |
| 90 | 98-9389 | 2 | Cap-Sealing |
| 100 | 98-9479 | 12 | Bolt-Head, Cylinder |
| 105 | 98-9479 | 2 | Bolt-Head, Cylinder |
| 110 | 108-6573 | 1 | Gasket-Head, Cylinder |
| 120 | 98-9444 | 1 | Plug |

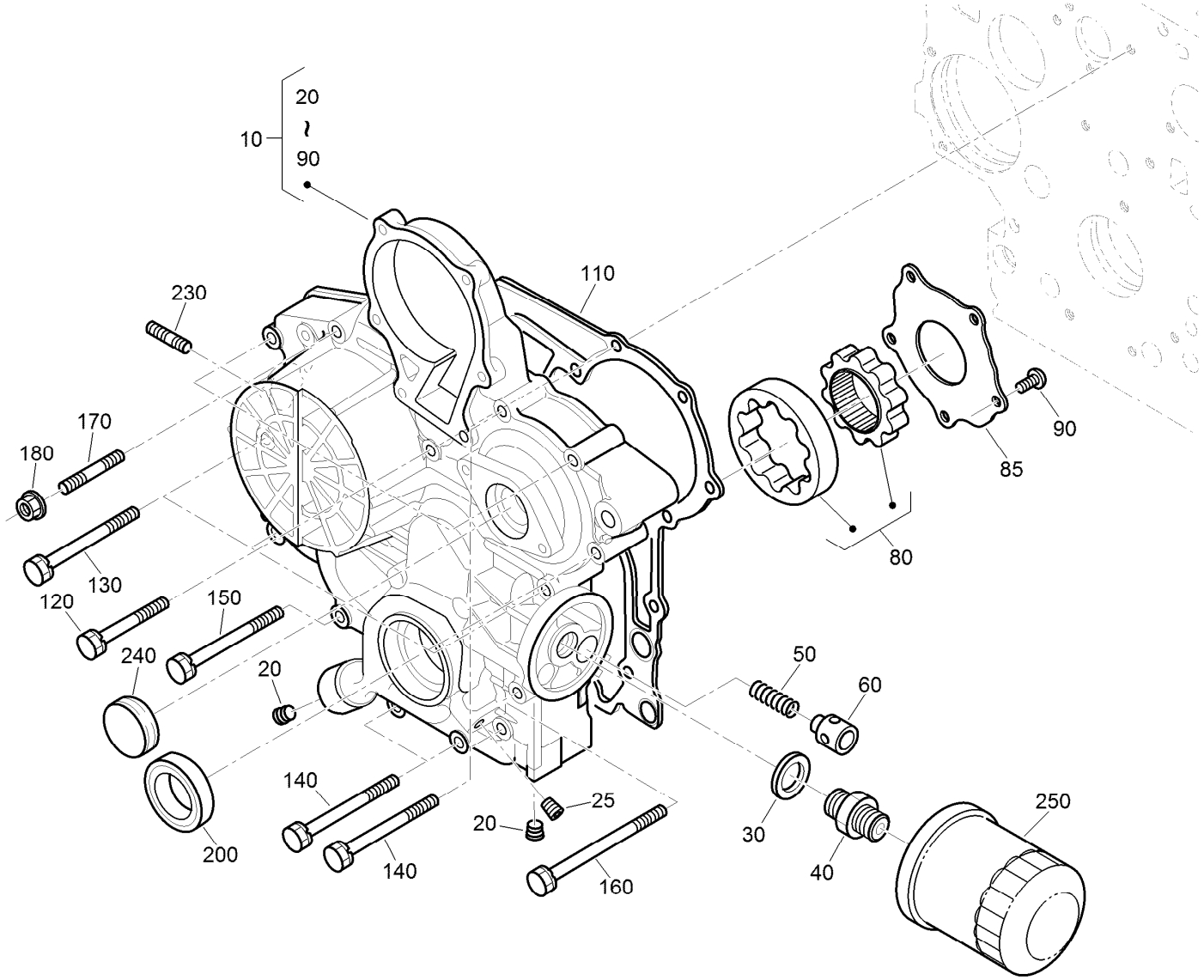


# Gear Case and Oil Filter Cartridge Assembly

| Ref. | Part Number | Qty. | Description |
|---|---|---|---|
| 10 | 130-1243 | 1 | Gear Case ASM |
| 20 | 98-9598 | 2 | Plug |
| 25 | 98-7487 | 1 | Plug |
| 30 | 98-7562 | 1 | Washer-Plain |
| 40 | 98-9388 | 1 | Joint-Pipe |
| 50 | 130-1511 | 1 | Spring |
| 60 | 130-1510 | 1 | Valve-Relief |
| 80 | 130-1508 | 1 | Rotor ASM |
| 85 | 130-1509 | 1 | Cover-Pump, Oil |
| 90 | 130-1164 | 5 | Screw-Binding |
| 110 | 98-9633 | 1 | Gasket-Case, Gear |

| Ref. | Part Number | Qty. | Description |
|---|---|---|---|
| 120 | 100-1765 | 3 | Bolt |
| 130 | 125-9063 | 4 | Bolt-Sems |
| 140 | 98-9356 | 4 | Bolt |
| 150 | 107-9074 | 1 | Bolt |
| 160 | 98-9586 | 1 | Bolt |
| 170 | 105-3709 | 1 | Stud |
| 180 | 100-2203 | 1 | Nut-Flange |
| 200 | 119-8038 | 1 | Seal-Oil |
| 230 | 105-3710 | 2 | Stud |
| 240 | 98-9641 | 1 | Cover-Case, Gear |
| 250 | 127-0511 | 1 | Filter-Oil |

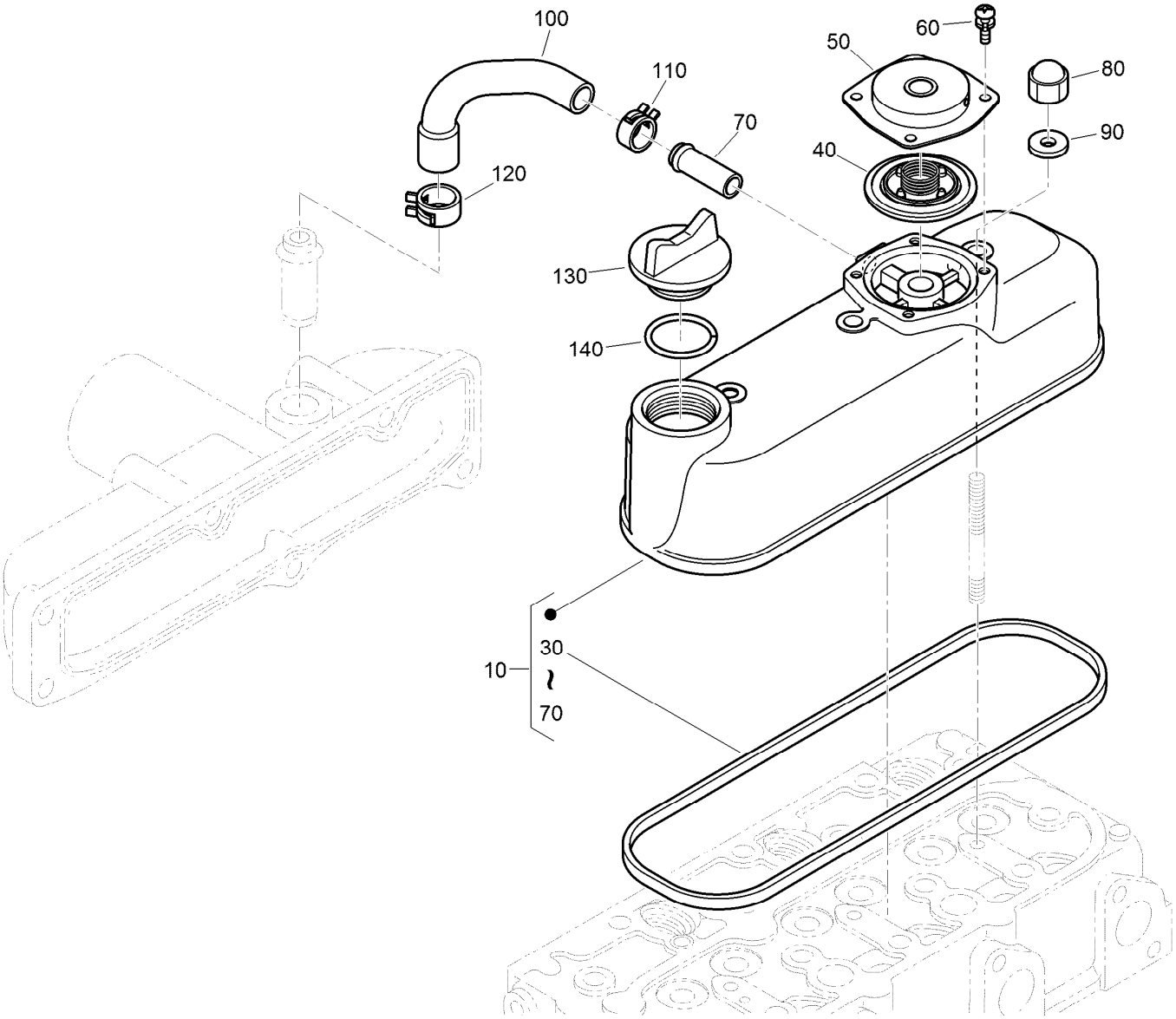


# Cylinder Head Cover Assembly

| Ref. | Part Number | Qty. | Description |
|---|---|---|---|
| 10 | 130-1372 | 1 | Cylinder Head Cover ASM |
| 30 | 130-1249 | 1 | *obs* Gasket-Head Cover |
| 40 | 110-3715 | 1 | Valve-Breather |
| 50 | 110-3714 | 1 | Cover-Breather |
| 60 | 98-9364 | 4 | Screw (With Washer) |
| 70 | 98-7766 | 1 | Pipe-Return, Water |
| 80 | 98-9455 | 3 | Nut-Cap |
| 90 | 98-9454 | 3 | Gasket |
| 100 | 108-2858 | 1 | Tube-Breather |
| 110 | 108-2859 | 1 | Clamp-Hose |
| 120 | 108-2860 | 1 | Clamp-Hose |
| 130 | 107-9075 | 1 | Plug-Filler, Oil |
| 140 | 99-3446 | 1 | O-Ring |

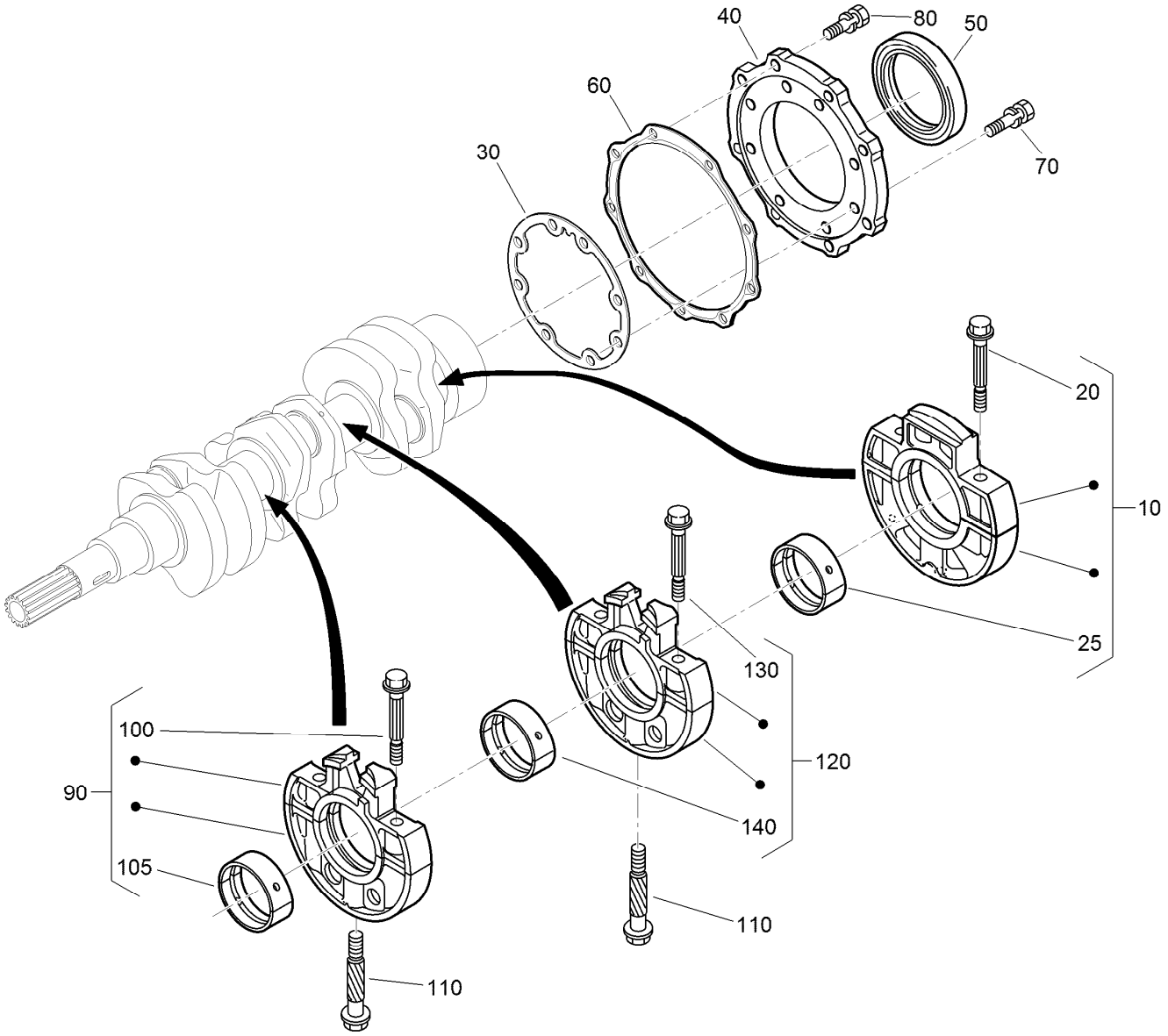


# Main Bearing Case Assembly

| Ref. | Part Number | Qty. | Description |
|---|---|---|---|
| 10 | 112-7026 | 1 | Wheel Bearing Case ASM |
| 20 | 98-9484 | 2 | Bolt-Case, Bearing |
| 25 | 115-4121 | 1 | Metal-Crankshaft (STD) |
| 25 | 112-7039 | 1 | Metal-Crankshaft (0.2Mm) |
| 25 | 112-7040 | 1 | Metal-Crankshaft (-0.4Mm) |
| 30 | 127-0440 | 1 | Gasket-Case, Bearing |
| 40 | 112-7046 | 1 | Cover-Case, Bearing |
| 50 | 112-0180 | 1 | Seal-Oil |
| 60 | 112-7037 | 1 | Gasket-Cover, Case |
| 70 | 127-0441 | 8 | Bolt |
| 80 | 127-0442 | 9 | Bolt |

| Ref. | Part Number | Qty. | Description |
|---|---|---|---|
| 90 | 115-4106 | 1 | Main Bearing Case ASM |
| 100 | 98-9484 | 2 | Bolt-Case, Bearing |
| 105 | 98-9524 | 1 | Metal-Crankshaft (STD Set) |
| 105 | 127-0433 | 1 | Metal-Crankshaft (-0.2Mm) |
| 105 | 98-9531 | 1 | Bearing-Main (0.4Mm) |
| 110 | 98-9485 | 2 | Bolt-Case, Bearing |
| 120 | 115-4107 | 1 | Main Bearing Case ASM |
| 130 | 98-9484 | 2 | Bolt-Case, Bearing |
| 140 | 98-9524 | 1 | Metal-Crankshaft (STD Set) |
| 140 | 127-0433 | 1 | Metal-Crankshaft (-0.2Mm) |
| 140 | 98-9531 | 1 | Bearing-Main (0.4Mm) |

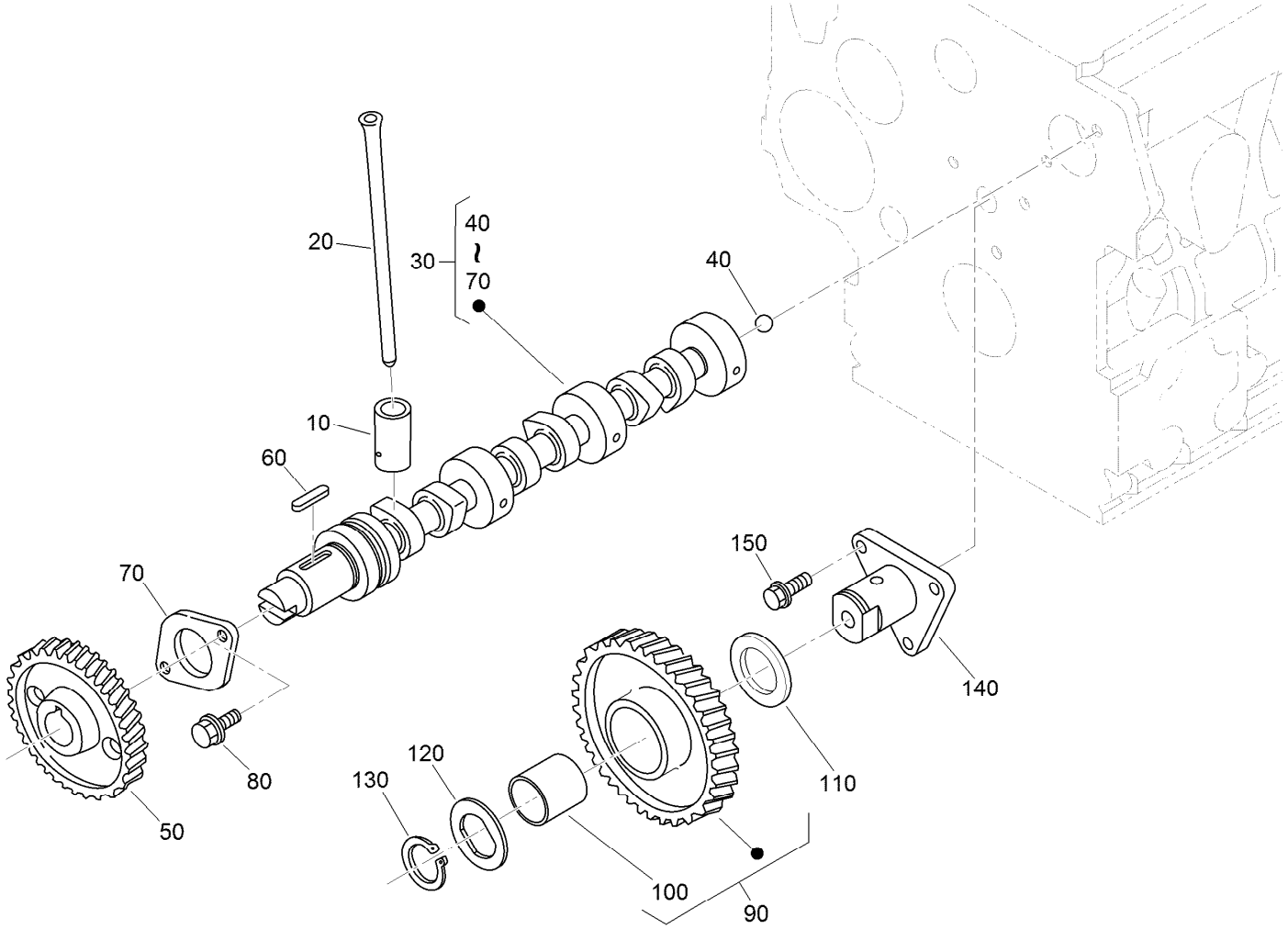


# Camshaft and Idle Gear Shaft Assembly

| Ref. | Part Number | Qty. | Description |
|---|---|---|---|
| 10 | 112-0185 | 1 | Tappet |
| 20 | 127-0421 | 6 | Rod-Push |
| 30 | 130-1545 | 1 | Camshaft ASM |
| 40 | 110-3729 | 1 | Ball |
| 50 | 98-9512 | 1 | Gear-Cam |
| 60 | 98-9378 | 1 | Key-Feather |
| 70 | 98-9510 | 1 | Stopper-Camshaft |
| 80 | 98-7692 | 2 | Bolt |
| 90 | 117-7584 | 1 | Idler Gear ASM |
| 100 | 117-7585 | 1 | Bushing-Gear, Idle |
| 110 | 98-9535 | 1 | Collar-Gear, Idle |
| 120 | 98-9536 | 1 | Collar-Gear, Idle |
| 130 | 98-9534 | 1 | Circlip-Gear, Idle |
| 140 | 98-9533 | 1 | Shaft-Gear, Idle |
| 150 | 98-7692 | 3 | Bolt |

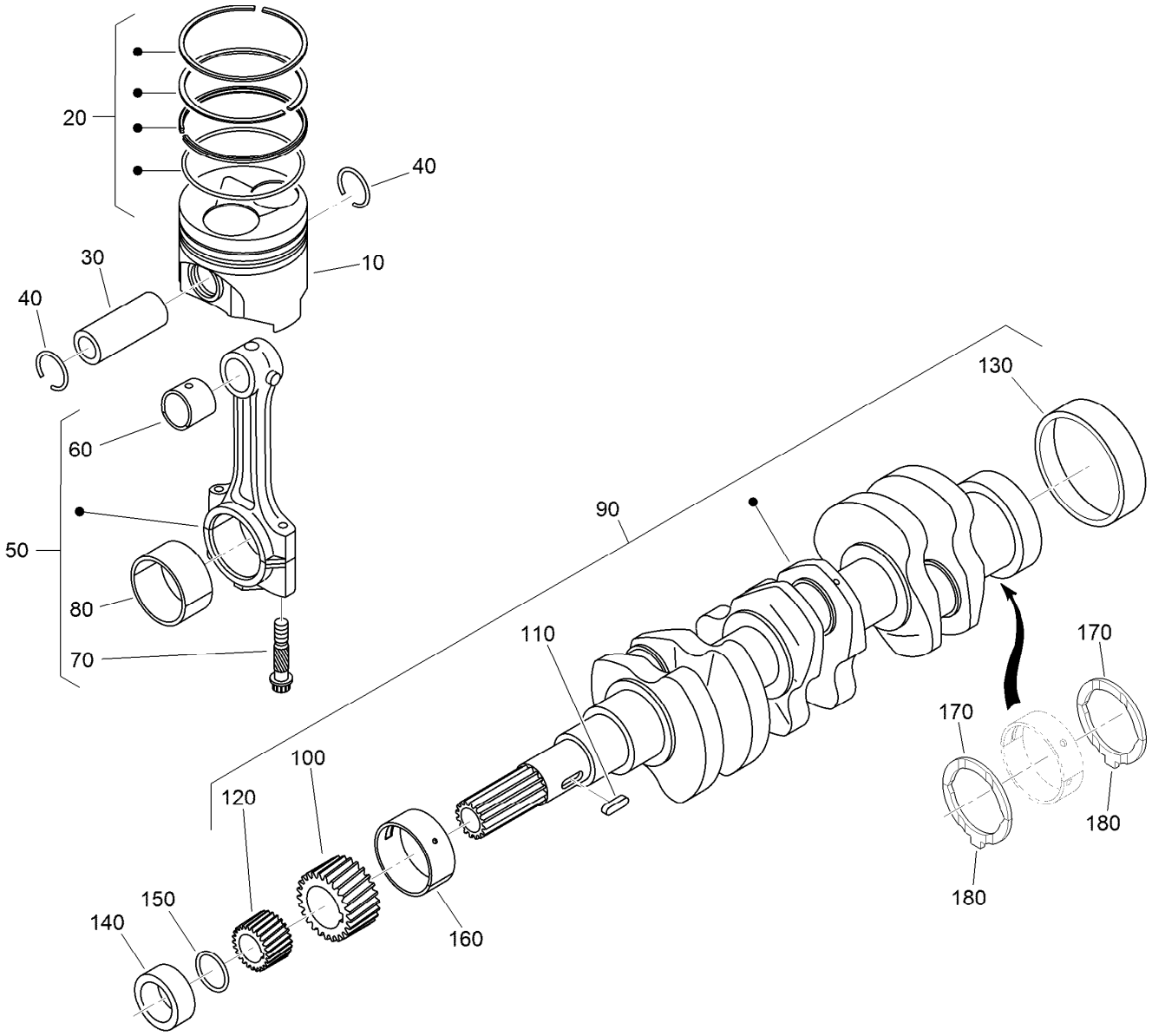


# Piston and Crankshaft Assembly

| Ref. | Part Number | Qty. | Description |
|---|---|---|---|
| 10 | 130-1546 | 3 | Piston (STD) |
| 10 | 130-1549 | 3 | Piston (+0.50Mm) |
| 20 | 130-1506 | 3 | Piston Ring ASM (STD) |
| 20 | 130-1507 | 3 | Piston Ring ASM (+0.50Mm) |
| 30 | 98-9513 | 3 | Pin-Piston |
| 40 | 98-9514 | 6 | Circlip-Pin, Piston |
| 50 | 117-7586 | 3 | Connecting Rod ASM |
| 60 | 115-3014 | 3 | Bushing-Pin, Piston |
| 70 | 98-9517 | 6 | Bolt-Rod, Connecting |
| 80 | 98-9553 | 3 | Bearing-Rod (STD) |
| 80 | 117-7587 | 3 | Metal-Crankpin (-0.2Mm) |
| 80 | 117-7588 | 3 | Metal-Crankpin (-0.4Mm) |
| 90 | 130-1375 | 1 | Crankshaft ASM |
| 100 | 117-7561 | 1 | Gear-Crankshaft |
| 110 | 98-9666 | 1 | Key |

| Ref. | Part Number | Qty. | Description |
|---|---|---|---|
| 120 | 127-0445 | 1 | Gear-Drive, Oil Pump |
| 130 | 98-9522 | 1 | Sleeve-Crankshaft |
| 140 | 127-0444 | 1 | Collar-Crankshaft |
| 150 | 105-3783 | 1 | O-Ring |
| 160 | 112-7005 | 1 | Bearing-Main (STD) |
| 160 | 98-9528 | 1 | Bearing-Main (-0.2Mm) |
| 160 | 130-1274 | 1 | *obs* Metal-Crankshaft (-0.40Mm) |
| 170 | 98-9413 | 2 | Bearing-Thrust (STD) |
| 170 | 127-0416 | 2 | Metal-Side (+0.2Mm) |
| 170 | 127-0417 | 2 | Metal-Side (+0.40Mm) |
| 180 | 98-9688 | 2 | Bearing-Thrust (STD) |
| 180 | 127-0437 | 2 | Metal-Side (+0.2Mm) |
| 180 | 127-0438 | 2 | Metal-Side (+0.40Mm) |

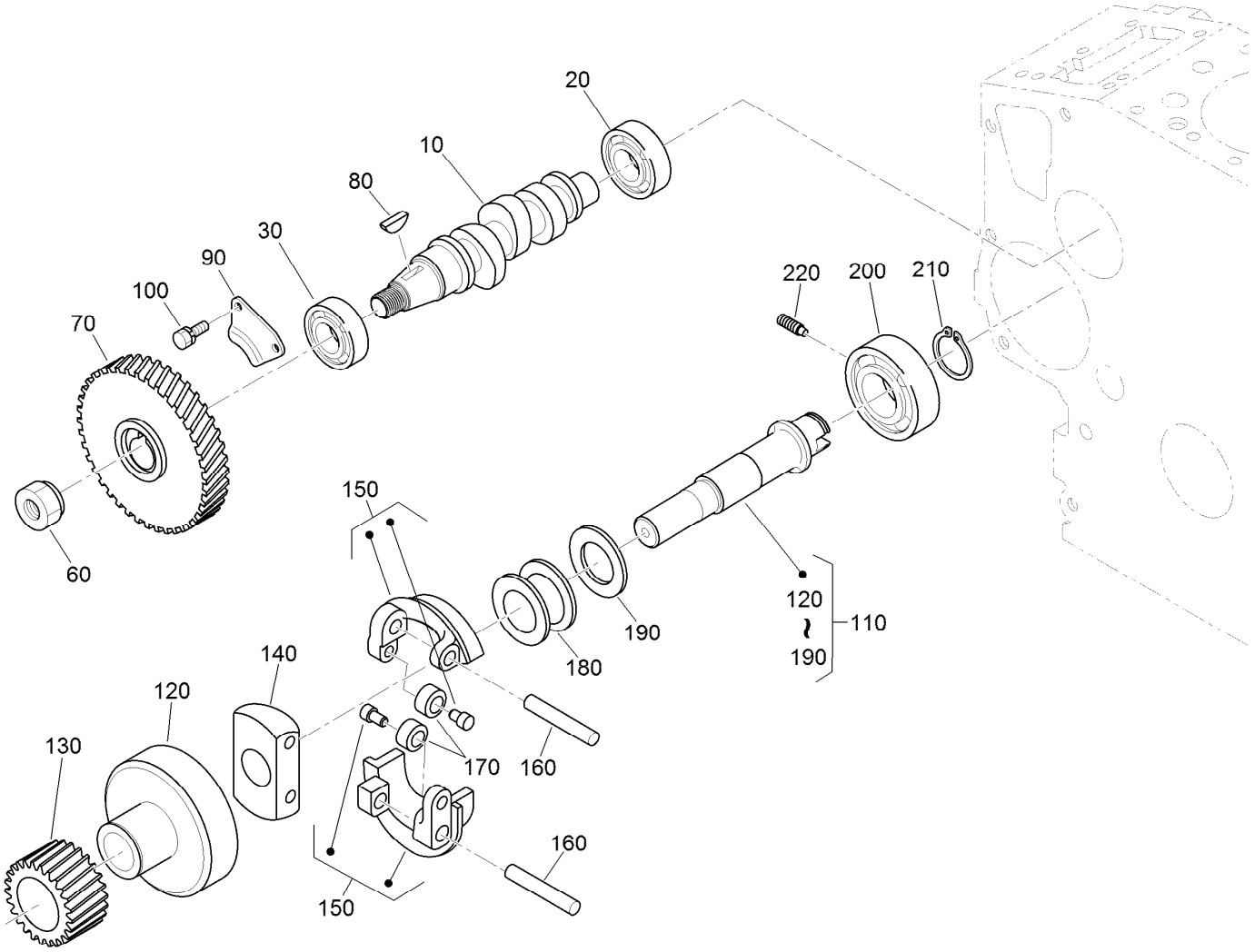


# Fuel Camshaft and Governor Shaft Assembly

| Ref. | Part Number | Qty. | Description |
|---|---|---|---|
| 10 | 98-9459 | 1 | Camshaft-Fuel |
| 20 | 107-9077 | 1 | Bearing-Ball |
| 30 | 107-9078 | 1 | Bearing-Ball |
| 60 | 130-1512 | 1 | Nut |
| 70 | 120-2562 | 1 | Gear-Pump, Injection |
| 80 | 98-9595 | 1 | Key-Woodruff |
| 90 | 98-9511 | 1 | Stopper-Fuel, Camshaft |
| 100 | 98-7692 | 2 | Bolt |
| 110 | 130-1255 | 1 | *obs* Governor Shaft ASM |
| 120 | 98-9562 | 1 | Holder-Gear, Governor |

| Ref. | Part Number | Qty. | Description |
|---|---|---|---|
| 130 | 98-9673 | 1 | Gear-Governor |
| 140 | 98-9561 | 1 | Holder-Weight, Governor |
| 150 | 130-1240 | 2 | Governor Weight ASM |
| 160 | 98-9560 | 2 | Shaft-Weight, Governor |
| 170 | 98-9692 | 2 | Roller |
| 180 | 98-9563 | 1 | Sleeve-Governor |
| 190 | 98-9564 | 1 | Washer-Thrust |
| 200 | 107-9079 | 1 | Bearing-Ball |
| 210 | 98-9657 | 1 | Circlip-Shaft, Governor |
| 220 | 98-9565 | 1 | Screw-Set |

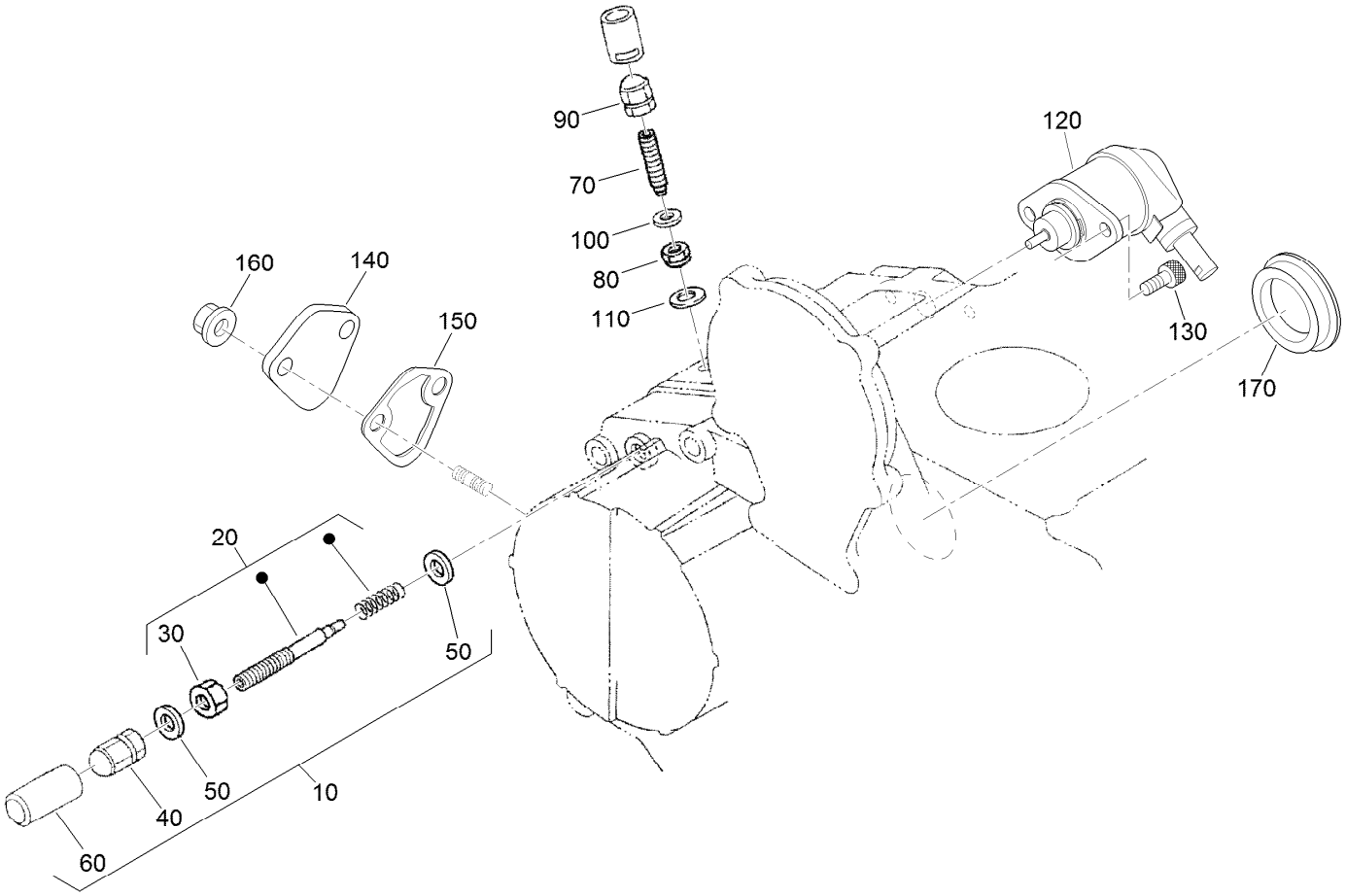


# Idle Apparatus Assembly

| Ref. | Part Number | Qty. | Description |
|---|---|---|---|
| 10 | 98-9678 | 1 | Idle Apparatus ASM |
| 20 | 112-7014 | 1 | Adjusting Bolt ASM |
| 30 | 98-9439 | 1 | Nut |
| 40 | 112-0181 | 1 | Nut |
| 50 | 98-7654 | 2 | Gasket |
| 60 | 98-7656 | 1 | Cap |
| 70 | 112-7015 | 1 | Bolt-Adjusting |
| 80 | 100-2175 | 1 | Nut-Lock |
| 90 | 112-0181 | 1 | Nut |

| Ref. | Part Number | Qty. | Description |
|---|---|---|---|
| 100 | 98-7654 | 1 | Gasket |
| 110 | 107-9081 | 1 | Gasket |
| 120 | 104-5155 | 1 | Solenoid-Stop |
| 130 | 130-1155 | 2 | Screw-HSH |
| 140 | 99-3514 | 1 | Cover |
| 150 | 117-7562 | 1 | Gasket-Pump, Fuel |
| 160 | 100-2203 | 2 | Nut-Flange |
| 170 | 112-7016 | 1 | Cover-Pump |

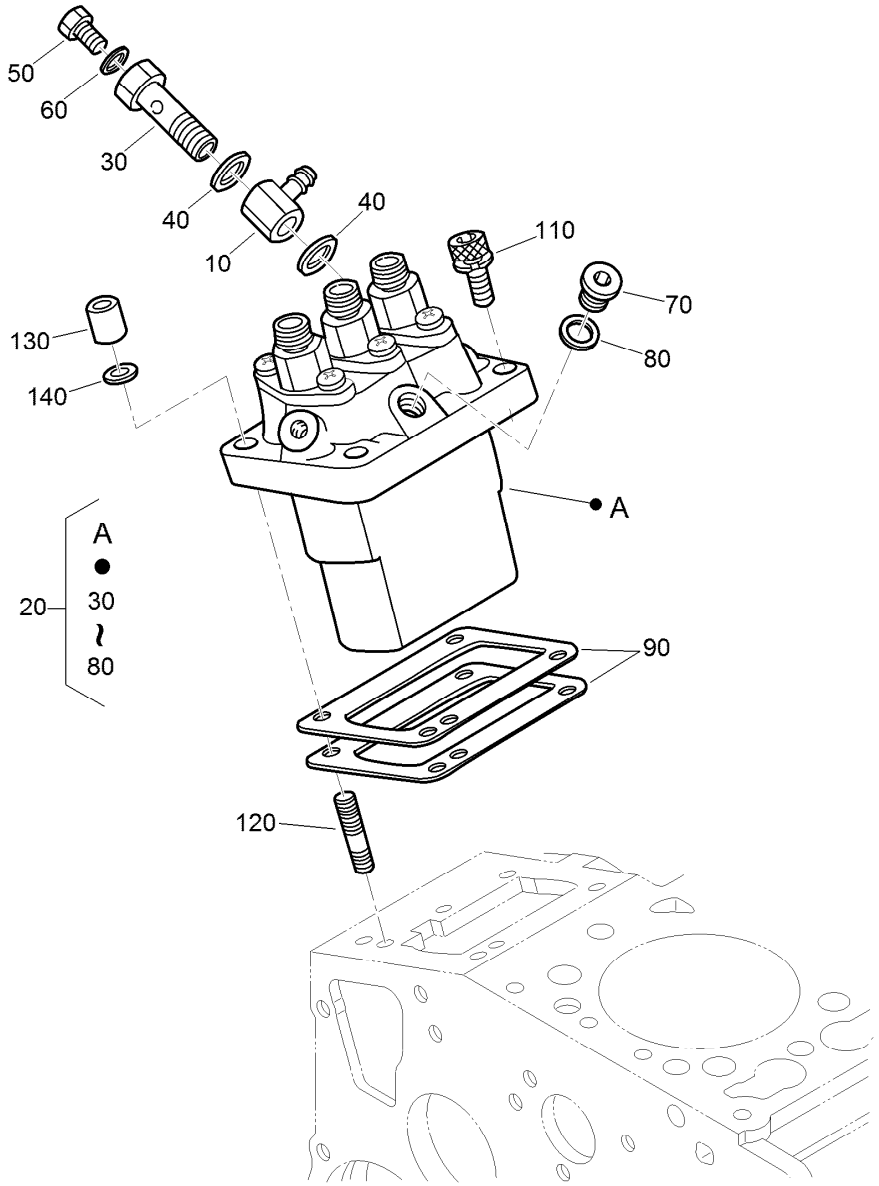


# Injection Pump Assembly

| Ref. | Part Number | Qty. | Description |
|---|---|---|---|
| 10 | 98-9596 | 1 | Joint-Eye |
| 20 | 98-9643 | 1 | Injection Pump ASM |
| 30 | 98-9464 | 1 | Bolt-Joint |
| 40 | 98-9445 | 2 | Gasket |
| 50 | 98-9430 | 1 | Screw |
| 60 | 98-9446 | 1 | Gasket |
| 70 | 98-9466 | 1 | Plug |
| 80 | 98-9451 | 1 | Gasket |
| 90 | 98-9456 | 1 | Shim-Injection (0.20Mm) |

| Ref. | Part Number | Qty. | Description |
|---|---|---|---|
| 90 | 98-9457 | 1 | Shim-Injection (0.25Mm) |
| 90 | 98-9458 | 1 | Shim-Injection (0.30Mm) |
| 90 | 115-3046 | 1 | Shim-Injection (0.35Mm) |
| 90 | 115-3045 | 1 | Shim-Injection (0.175Mm) |
| 110 | 117-7564 | 2 | Bolt-Hex Soc HD |
| 120 | 98-9438 | 2 | Stud |
| 130 | 98-9440 | 2 | Nut-Cap |
| 140 | 98-7699 | 2 | Washer-Spring |

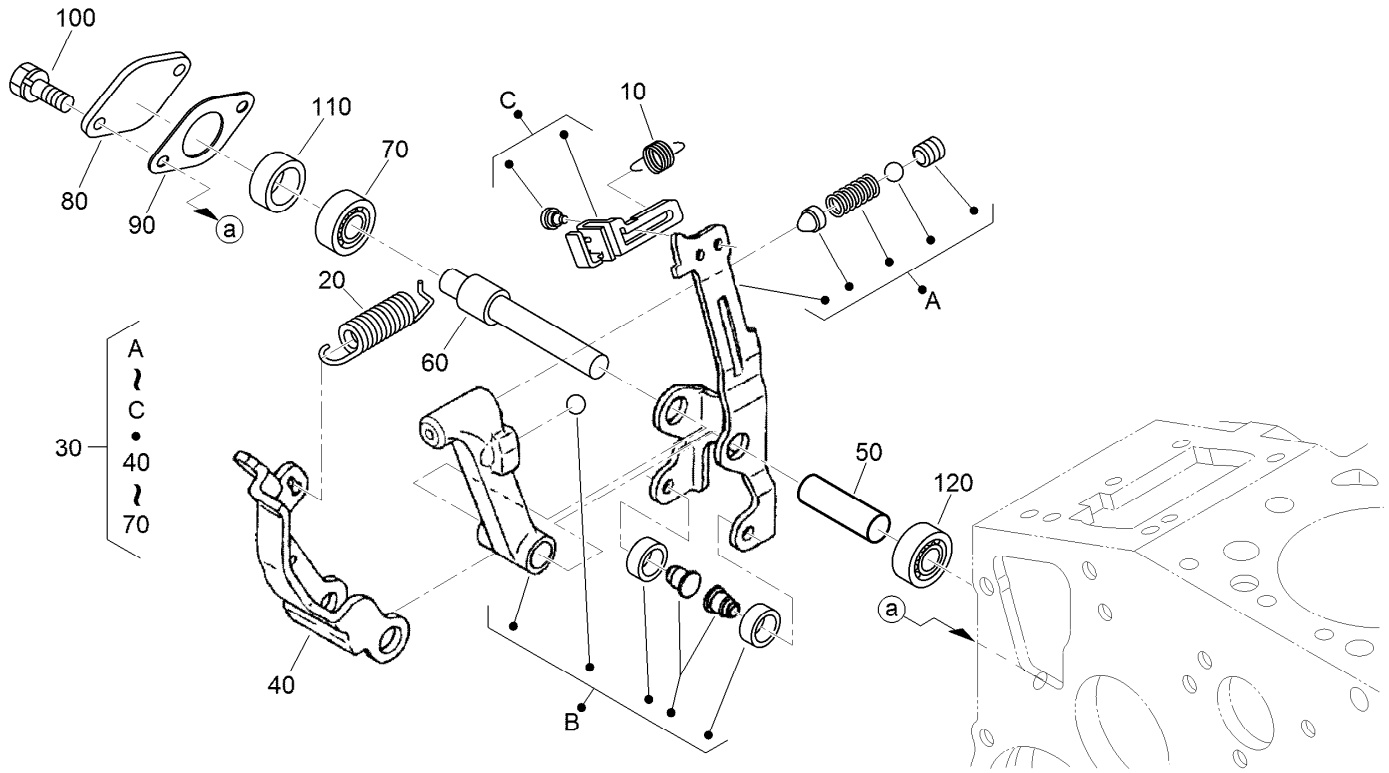


# Governor Assembly

| Ref. | Part Number | Qty. | Description |
|---|---|---|---|
| 10 | 105-3786 | 1 | Spring-Start |
| 20 | 98-9681 | 1 | Spring-Governor |
| 30 | 115-4502 | 1 | Fork Lever ASM |
| 40 | 107-9084 | 1 | Lever-Fork |
| 50 | 107-9085 | 1 | Shaft-Lever, Fork |
| 60 | 107-9086 | 1 | Shaft-Lever, Fork |
| 70 | 98-9570 | 1 | Bearing-Miniaturize |
| 80 | 115-4122 | 1 | Cover-Shaft, Fork Lever |
| 90 | 98-9682 | 1 | Gasket |
| 100 | 98-9350 | 2 | Bolt |
| 110 | 98-9567 | 1 | Collar |
| 120 | 98-9571 | 1 | Bearing-Miniaturize |

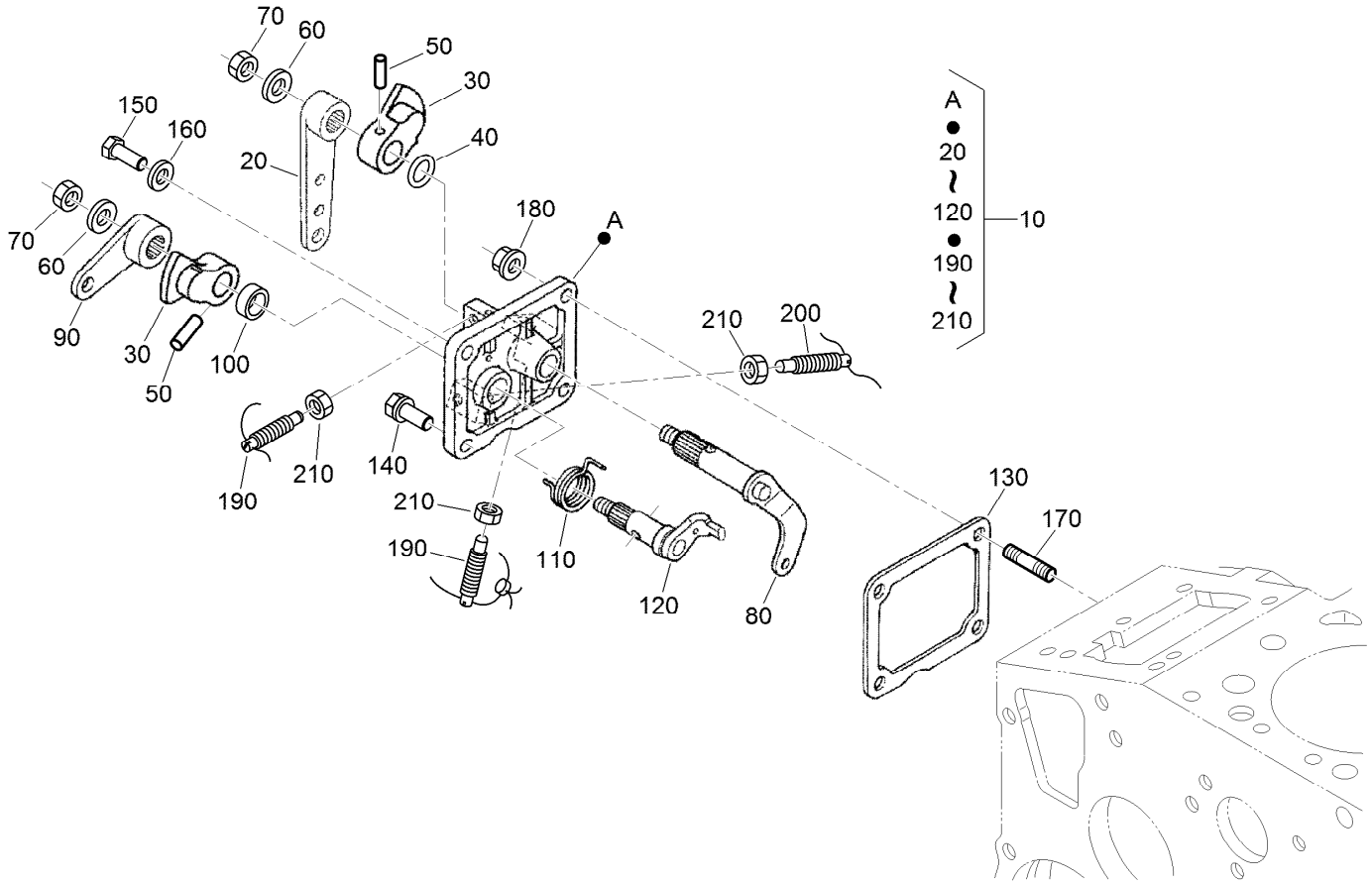


# Speed Control Plate Assembly

| Ref. | Part Number | Qty. | Description |
|---|---|---|---|
| 10 | 105-3735 | 1 | Control Plate ASM |
| 20 | 98-9662 | 1 | Lever-Control, Speed |
| 30 | 98-9572 | 2 | Lever-Control, Speed |
| 40 | 105-3788 | 1 | O-Ring |
| 50 | 98-7602 | 2 | Pin-Spring |
| 60 | 98-9594 | 2 | Washer-Plain |
| 70 | 98-9589 | 2 | Nut |
| 80 | 98-9658 | 1 | Governor Lever ASM |
| 90 | 98-9663 | 1 | Lever-Stop, Engine |
| 100 | 98-7601 | 1 | Seal-Oil |
| 110 | 98-9472 | 1 | Spring-Return |

| Ref. | Part Number | Qty. | Description |
|---|---|---|---|
| 120 | 98-9664 | 1 | Shaft-Lever, Stop |
| 130 | 98-9637 | 1 | Gasket |
| 140 | 98-7692 | 1 | Bolt |
| 150 | 127-0401 | 1 | Bolt-Hex |
| 160 | 98-7654 | 1 | Gasket |
| 170 | 105-3710 | 2 | Stud |
| 180 | 100-2203 | 2 | Nut-Flange |
| 190 | 117-7565 | 2 | Bolt-Adjusting |
| 200 | 117-7566 | 1 | Bolt-Adjusting |
| 210 | 98-7572 | 3 | Nut |

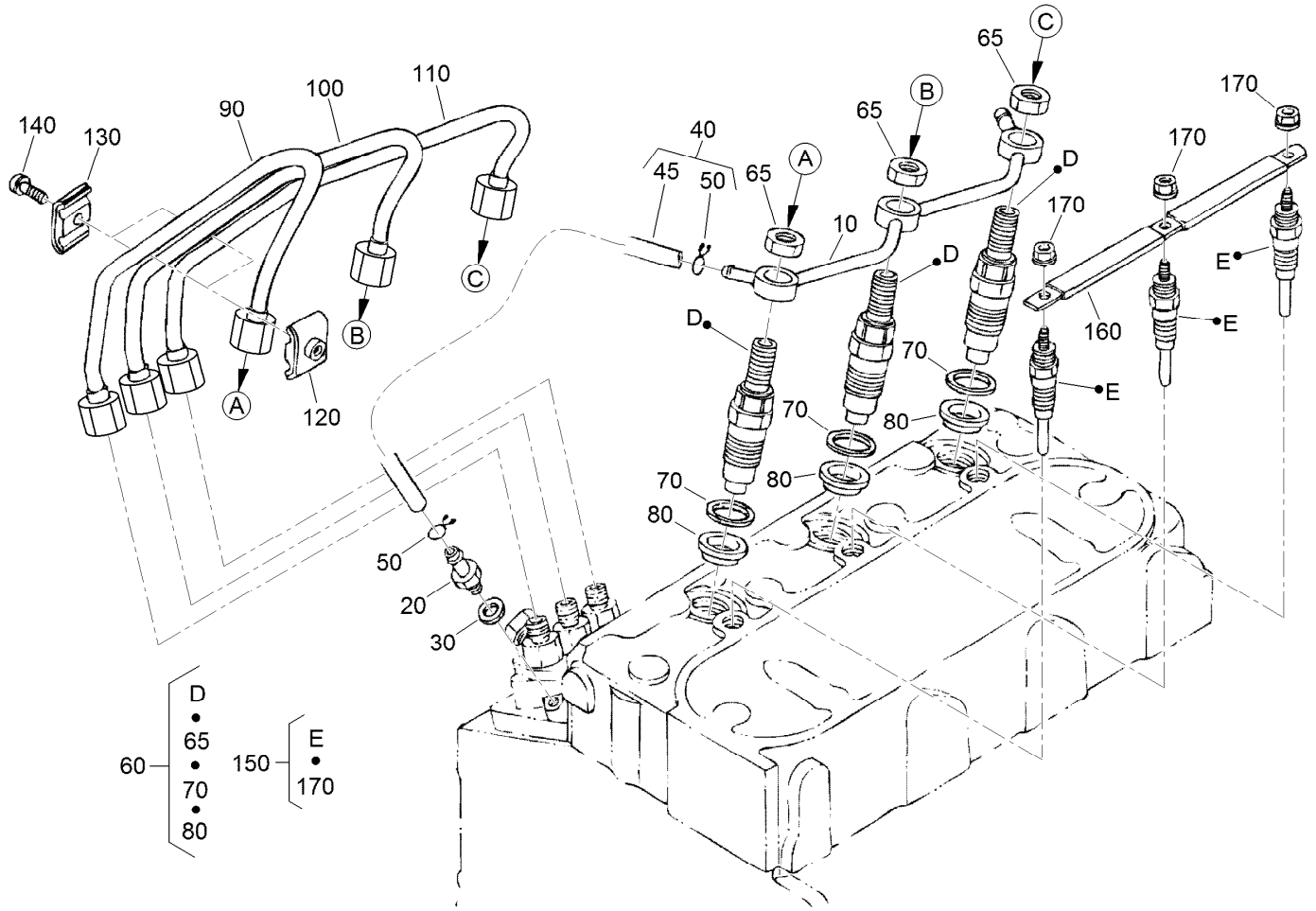


# Nozzle Holder and Glow Plug Assembly

| Ref. | Part Number | Qty. | Description |
|---|---|---|---|
| 10 | 98-9620 | 1 | Overflow Pipe ASM |
| 20 | 98-9431 | 1 | Screw-Bleeder, Air |
| 30 | 98-7654 | 1 | Gasket |
| 40 | 98-9420 | 1 | Overflow Pipe ASM |
| 45 | 112-0182 | 1 | Pipe-Overflow |
| 50 | 98-7671 | 2 | Clip-Pipe |
| 60 | 130-1410 | 3 | *obs* Nozzle Holder Kit |
| 65 | 121-2411 | 3 | Nut |
| 70 | 98-7676 | 3 | Gasket |
| 80 | 98-7677 | 3 | Seal-Heat |

| Ref. | Part Number | Qty. | Description |
|---|---|---|---|
| 90 | 98-9653 | 1 | Pipe-Injection |
| 100 | 98-9654 | 1 | Pipe-Injection |
| 110 | 98-9655 | 1 | Pipe-Injection |
| 120 | 98-7682 | 2 | Clamp-Pipe |
| 130 | 98-7683 | 2 | Clamp-Pipe |
| 140 | 98-7684 | 2 | Screw (W/Washer) |
| 150 | 130-1411 | 3 | Plug-Glow |
| 160 | 98-9631 | 1 | Cord-Plug, Glow |
| 170 | 99-8377 | 3 | Nut-Flange |

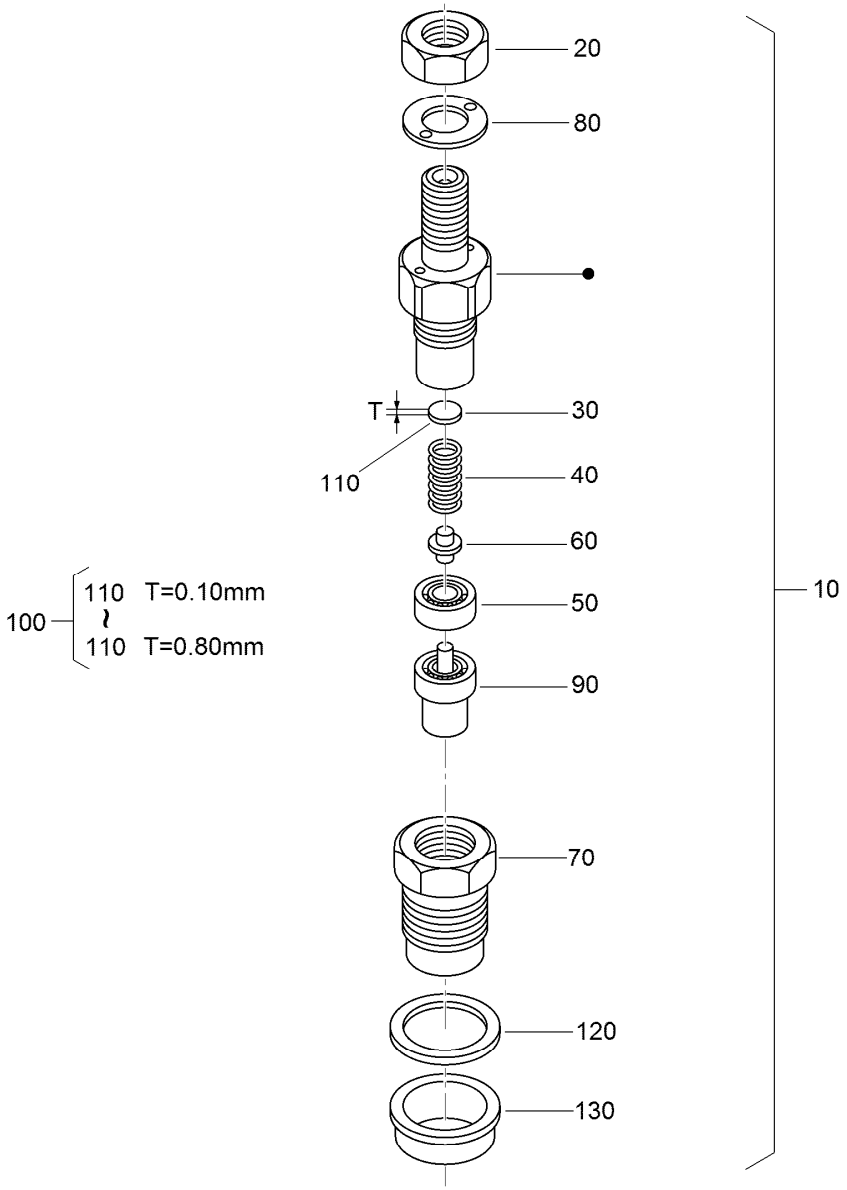


# Nozzle Holder Assembly

| Ref. | Part Number | Qty. | Description |
|---|---|---|---|
| 10 | 130-1410 | 3 | *obs* Nozzle Holder Kit |
| 20 | 121-2411 | 3 | Nut |
| 30 | 99-8302 | 3 | Washer-Adjusting |
| 40 | 99-8303 | 3 | Spring-Nozzle |
| 50 | 99-8304 | 3 | Spacer-Distance |
| 60 | 99-8305 | 3 | Rod-Push |
| 70 | 99-8306 | 3 | Nut-Nozzle |
| 80 | 99-8307 | 3 | Washer-Plain |
| 90 | 115-3020 | 3 | Piece-Nozzle |
| 100 | 99-8309 | 3 | Adjusting Washer ASM |
| 110 | 99-8310 | 3 | Washer-Adjust (0.10Mm) |

| Ref. | Part Number | Qty. | Description |
|---|---|---|---|
| 110 | 99-8311 | 3 | Washer-Adjust (0.20Mm) |
| 110 | 99-8312 | 3 | Washer-Adjust (0.30Mm) |
| 110 | 99-8313 | 3 | Washer-Adjust (0.40Mm) |
| 110 | 99-8314 | 3 | Washer-Adjust (0.50Mm) |
| 110 | 99-8315 | 3 | Washer-Adjust (0.52Mm) |
| 110 | 99-8316 | 3 | Washer-Adjust (0.54Mm) |
| 110 | 99-8317 | 3 | Washer-Adjust (0.56Mm) |
| 110 | 99-8318 | 3 | Washer-Adjust (0.58Mm) |
| 110 | 99-8319 | 3 | Washer-Adjust (0.80Mm) |
| 120 | 98-7676 | 3 | Gasket |
| 130 | 98-7677 | 3 | Seal-Heat |

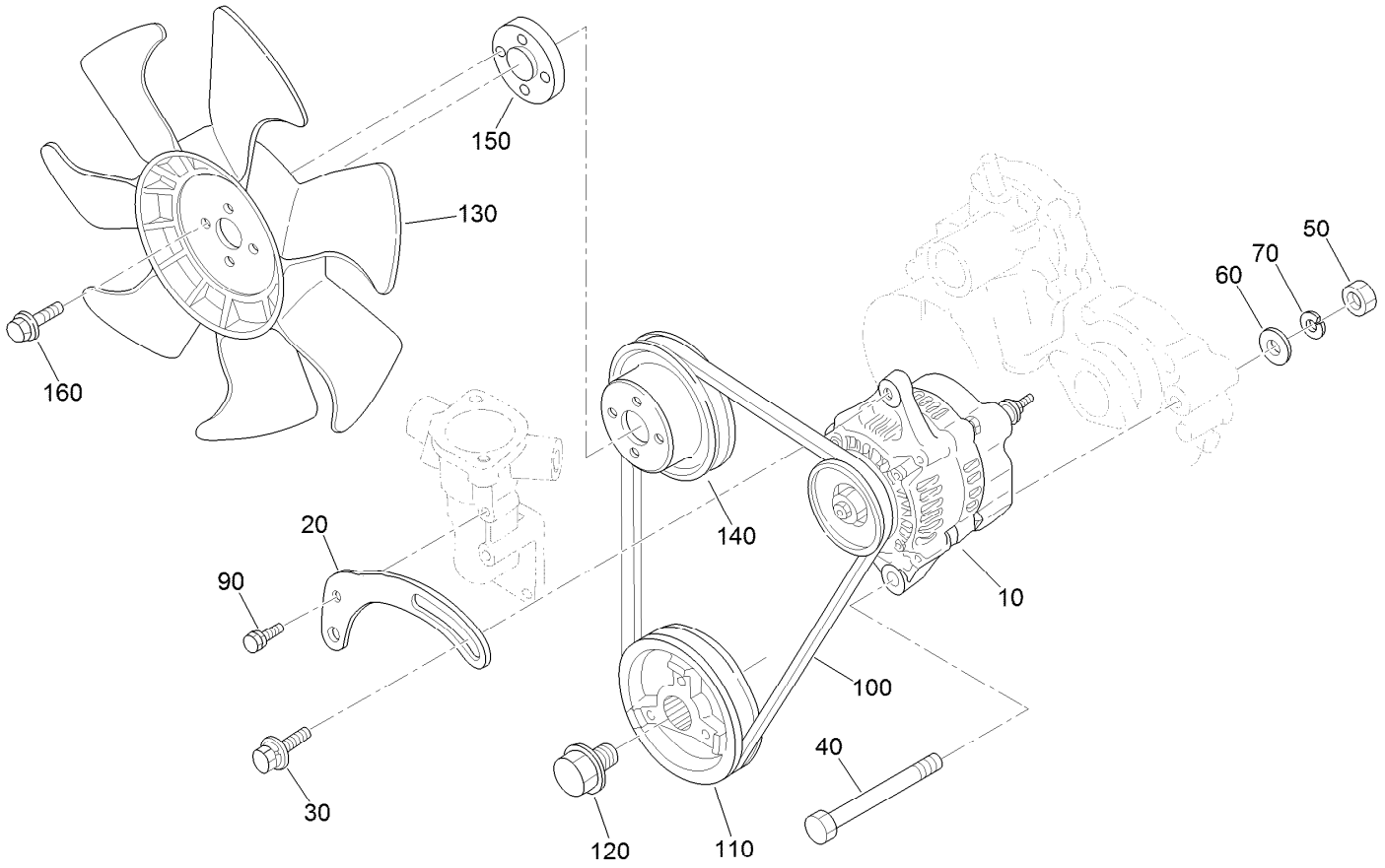


# Alternator, Pulley and Fan Assembly

| Ref. | Part Number | Qty. | Description |
|---|---|---|---|
| 10 | 98-9474 | 1 | Alternator ASM |
| 20 | 112-7047 | 1 | Stay-Dynamo |
| 30 | 108-7088 | 1 | Bolt |
| 40 | 98-9360 | 1 | Bolt |
| 50 | 98-7737 | 1 | Nut |
| 60 | 98-9366 | 1 | Washer-Plain |
| 70 | 98-7738 | 1 | Washer-Spring |
| 90 | 98-7692 | 1 | Bolt |
| 100 | 98-9676 | 1 | V-Belt |
| 110 | 98-9473 | 1 | Pulley-Drive, Fan |
| 120 | 98-9585 | 1 | Bolt |
| 130 | 104-4246 | 1 | Fan-Engine |
| 140 | 110-0972 | 1 | Pulley |
| 150 | 108-2872 | 1 | Collar-Fan |
| 160 | 108-2873 | 4 | Bolt-Flange |

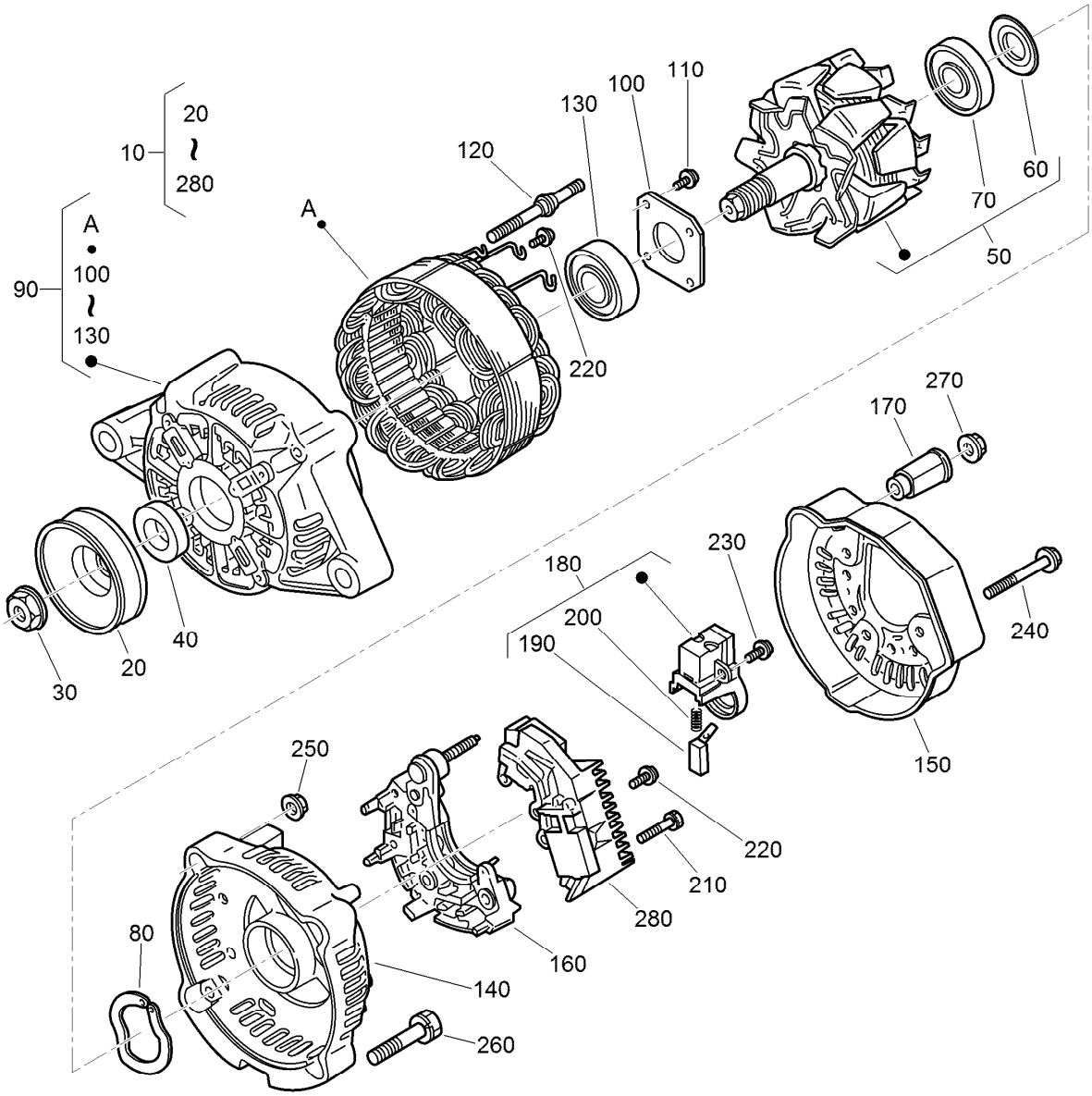


# Alternator Components Assembly

| Ref. | Part Number | Qty. | Description |
|---|---|---|---|
| 10 | 98-9474 | 1 | Alternator ASM |
| 20 | 98-9453 | 1 | Pulley-Dynamo |
| 30 | 98-7708 | 1 | Nut |
| 40 | 98-7709 | 1 | Collar |
| 50 | 107-0136 | 1 | Rotor ASM |
| 60 | 98-7711 | 1 | Cover-Bearing |
| 70 | 107-0138 | 1 | Bearing-Ball |
| 80 | 98-7713 | 1 | Washer-Thrust |
| 90 | 107-0139 | 1 | Drive End Frame ASM |
| 100 | 98-7715 | 1 | Plate-Retainer |
| 110 | 98-7716 | 4 | Screw-Head, Round |
| 120 | 98-7717 | 2 | Bolt-Through |
| 130 | 107-0137 | 1 | Bearing-Ball |
| 140 | 107-9087 | 1 | Frame-End |

| Ref. | Part Number | Qty. | Description |
|---|---|---|---|
| 150 | 107-0140 | 1 | Cover-End |
| 160 | 127-1612 | 1 | Rectifier ASM |
| 170 | 98-7722 | 1 | Bushing-Insulation |
| 180 | 107-0141 | 1 | Brush Holder ASM |
| 190 | 98-7724 | 2 | Brush |
| 200 | 98-7725 | 2 | Spring-Brush |
| 210 | 98-7726 | 2 | Screw-Head, Round |
| 220 | 98-7727 | 6 | Screw-Head, Round |
| 230 | 98-7728 | 1 | Screw-Head, Round |
| 240 | 98-7729 | 3 | Bolt |
| 250 | 98-7730 | 2 | Nut |
| 260 | 98-7731 | 2 | Bolt |
| 270 | 98-7732 | 1 | Nut |
| 280 | 110-3799 | 1 | Regulator ASM |

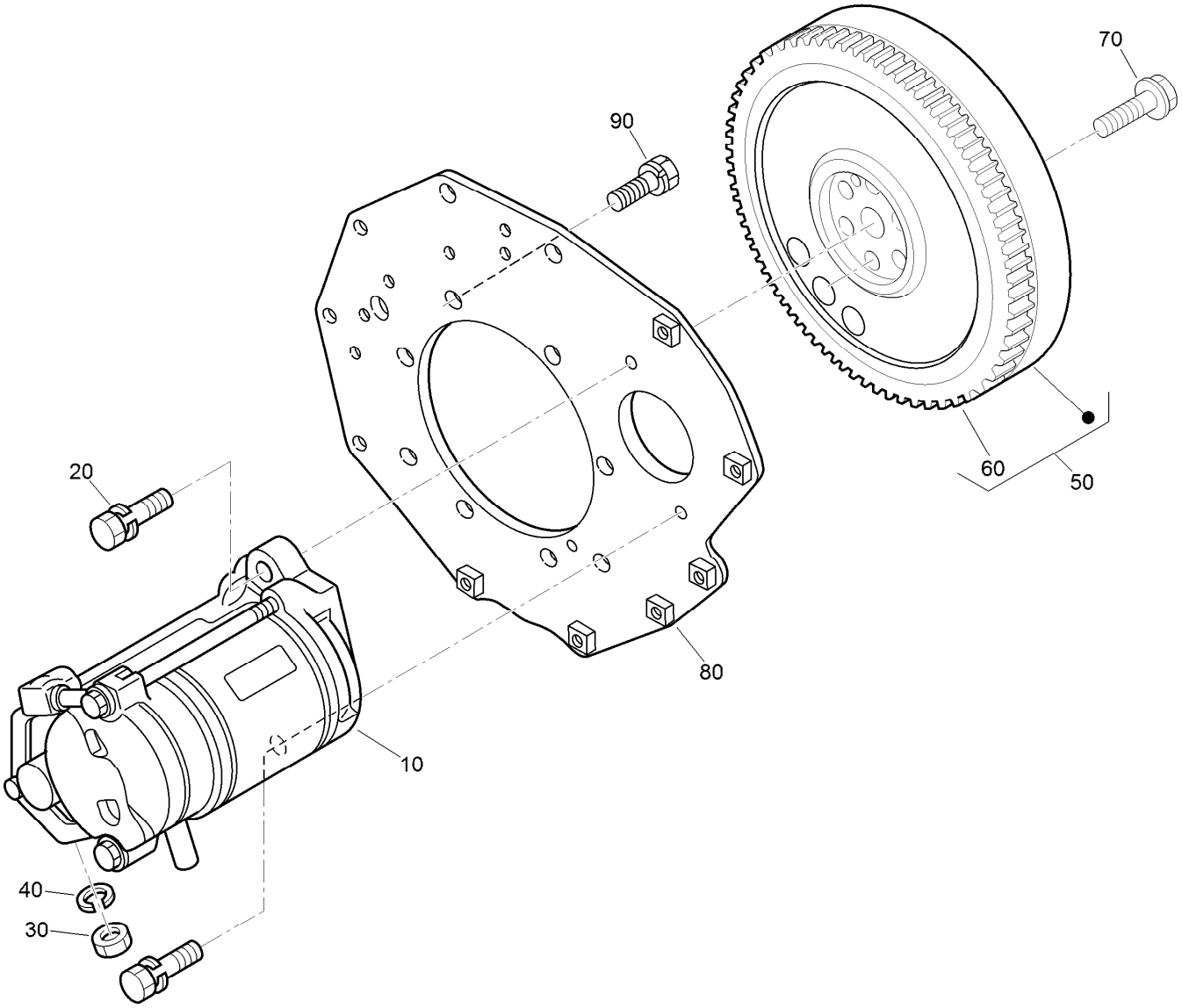


# Starter and Flywheel Assembly

| *Ref.* | *Part Number* | *Qty.* | *Description* |
|---|---|---|---|
| 10 | 98-9705 | 1 | Starter ASM |
| 20 | 98-7697 | 2 | Bolt |
| 30 | 98-7739 | 1 | Nut |
| 40 | 105-2893 | 1 | Washer-Spring |
| 50 | 105-3784 | 1 | Flywheel ASM |
| 60 | 115-3015 | 1 | Gear-Ring |
| 70 | 98-9537 | 6 | Bolt-Flywheel |
| 80 | 98-9486 | 1 | Plate-End, Rear |
| 90 | 98-9392 | 8 | Bolt |

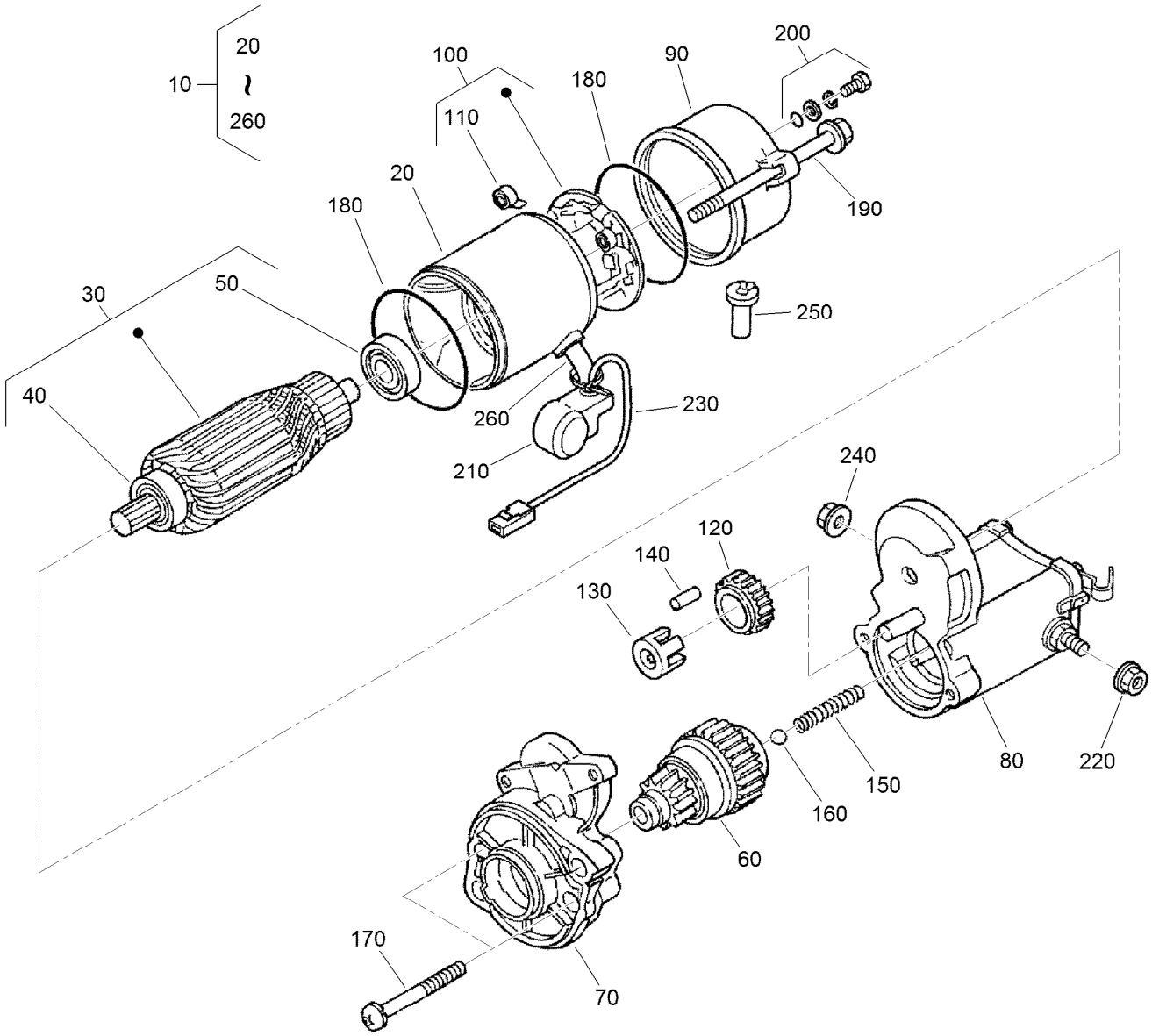


# Starter Component Assembly

| Ref. | Part Number | Qty. | Description |
|---|---|---|---|
| 10 | 98-9705 | 1 | Starter ASM |
| 20 | 104-8608 | 1 | Yoke ASM |
| 30 | 98-7742 | 1 | Armature ASM |
| 40 | 98-7744 | 1 | Bearing |
| 50 | 98-7743 | 1 | Bearing |
| 60 | 99-8373 | 1 | Clutch-Running, Over |
| 70 | 99-8374 | 1 | Frame-End, Drive |
| 80 | 105-3746 | 1 | Magnetic Switch ASM |
| 90 | 98-7748 | 1 | Frame-End |
| 100 | 98-7749 | 1 | Brush Holder ASM |
| 110 | 98-7750 | 4 | Spring-Brush |
| 120 | 98-7751 | 1 | Gear |
| 130 | 98-7752 | 1 | Retainer |

| Ref. | Part Number | Qty. | Description |
|---|---|---|---|
| 140 | 98-7753 | 5 | Roller |
| 150 | 98-7754 | 1 | Spring |
| 160 | 98-7755 | 1 | Ball |
| 170 | 98-7756 | 2 | Bolt |
| 180 | 98-7757 | 2 | O-Ring |
| 190 | 100-9240 | 2 | Bolt |
| 200 | 98-7758 | 2 | Bolt ASM |
| 210 | 99-8375 | 1 | Cover |
| 220 | 99-8371 | 1 | Nut-Hex |
| 230 | 98-9711 | 1 | Cord-Solenoid, Stop |
| 240 | 99-8376 | 1 | Nut-Hex |
| 250 | 98-7759 | 1 | Pipe-Drain |
| 260 | 98-9712 | 1 | Band-Cover |

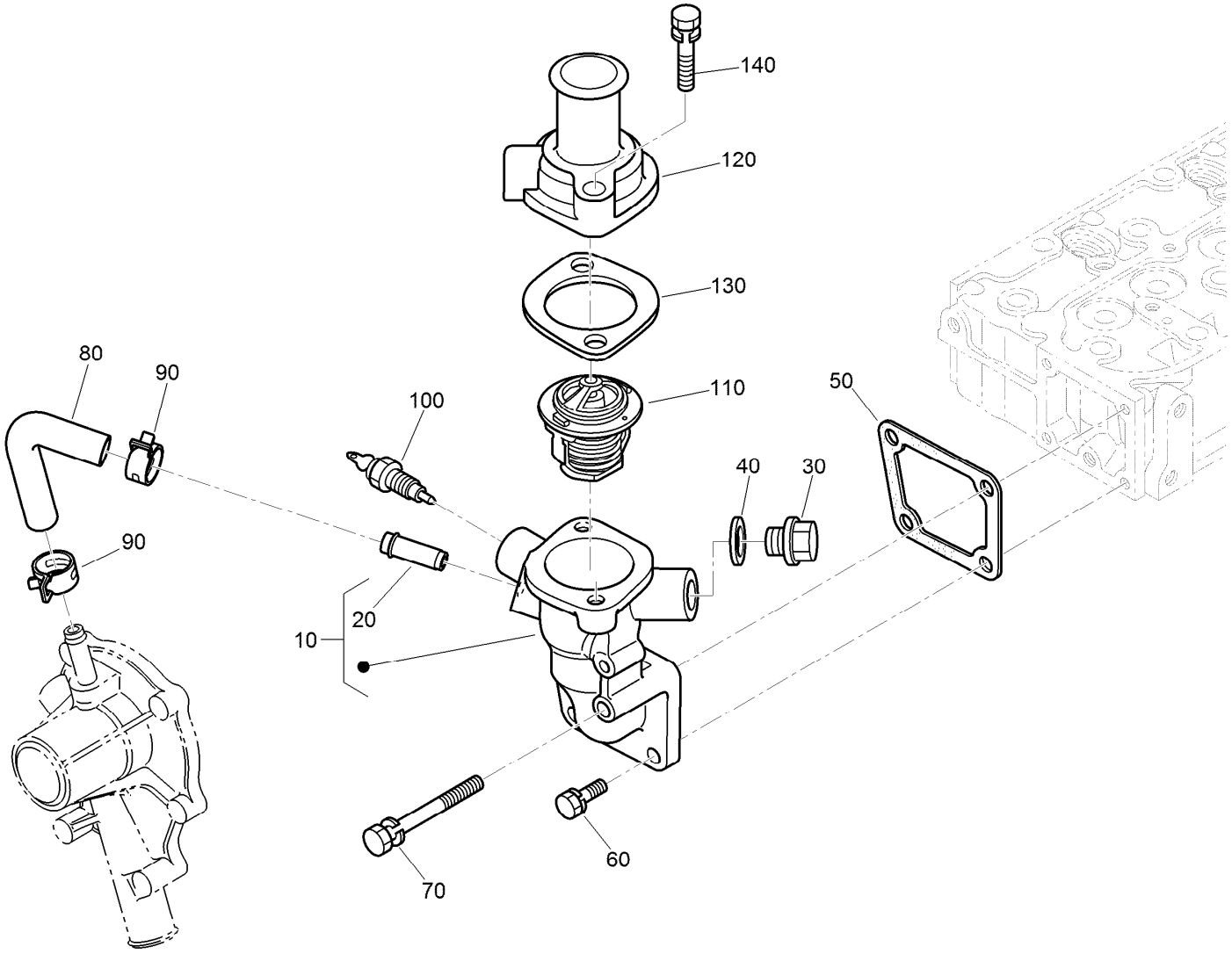


# Water Flange and Thermostat Assembly

| Ref. | Part Number | Qty. | Description |
|---|---|---|---|
| 10 | 98-9713 | 1 | Water Flange ASM |
| 20 | 98-9580 | 1 | Pipe-Return, Water |
| 30 | 105-3747 | 1 | Plug |
| 40 | 99-3583 | 1 | Gasket |
| 50 | 98-9638 | 1 | Gasket-Flange, Water |
| 60 | 98-7692 | 3 | Bolt |
| 70 | 98-9356 | 1 | Bolt |
| 80 | 98-9578 | 1 | Pipe-Return, Water |
| 90 | 125-9078 | 2 | Clamp-Hose |
| 100 | 112-0183 | 1 | Switch-Thermometer |
| 110 | 98-7778 | 1 | Thermostat ASM |
| 120 | 98-9471 | 1 | Cover-Thermostat |
| 130 | 105-3748 | 1 | Gasket-Thermostat |
| 140 | 98-7777 | 2 | Bolt |

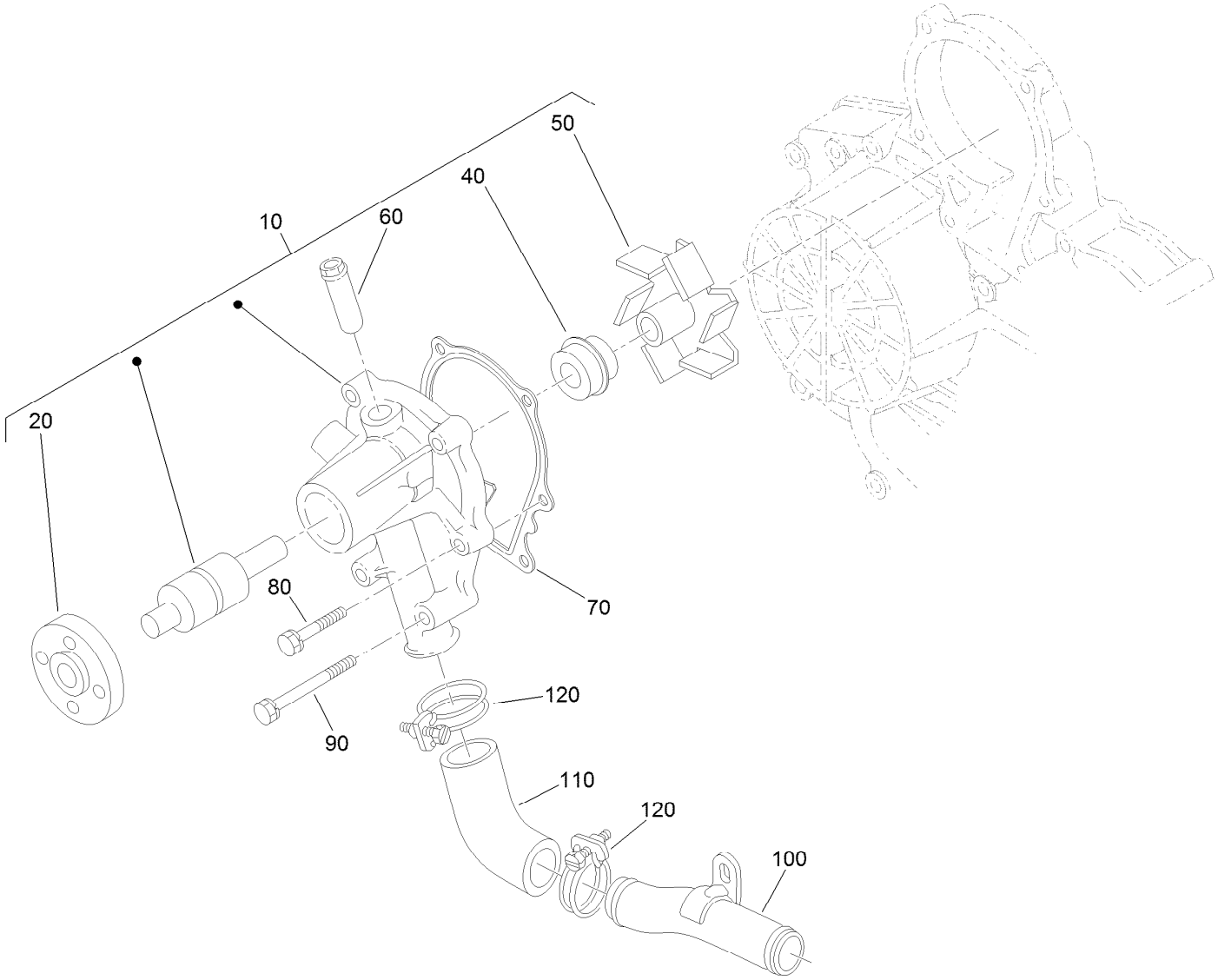


# Water Pump Assembly

| Ref. | Part Number | Qty. | Description |
|---|---|---|---|
| 10 | 107-9089 | 1 | Water Pump ASM |
| 20 | 99-3516 | 1 | Flange-Pump, Water |
| 40 | 105-3750 | 1 | Mechanical Seal ASM |
| 50 | 112-7017 | 1 | Impeller-Pump, Water |
| 60 | 100-1932 | 1 | Pipe-Return, Water |
| 70 | 99-3454 | 1 | Gasket-Pump, Water |
| 80 | 98-9353 | 4 | Bolt |
| 90 | 107-9090 | 2 | Bolt |
| 100 | 98-9716 | 1 | Pipe-Water |
| 110 | 107-9091 | 1 | Pipe-Water |
| 120 | 127-0439 | 2 | Clamp-Hose |

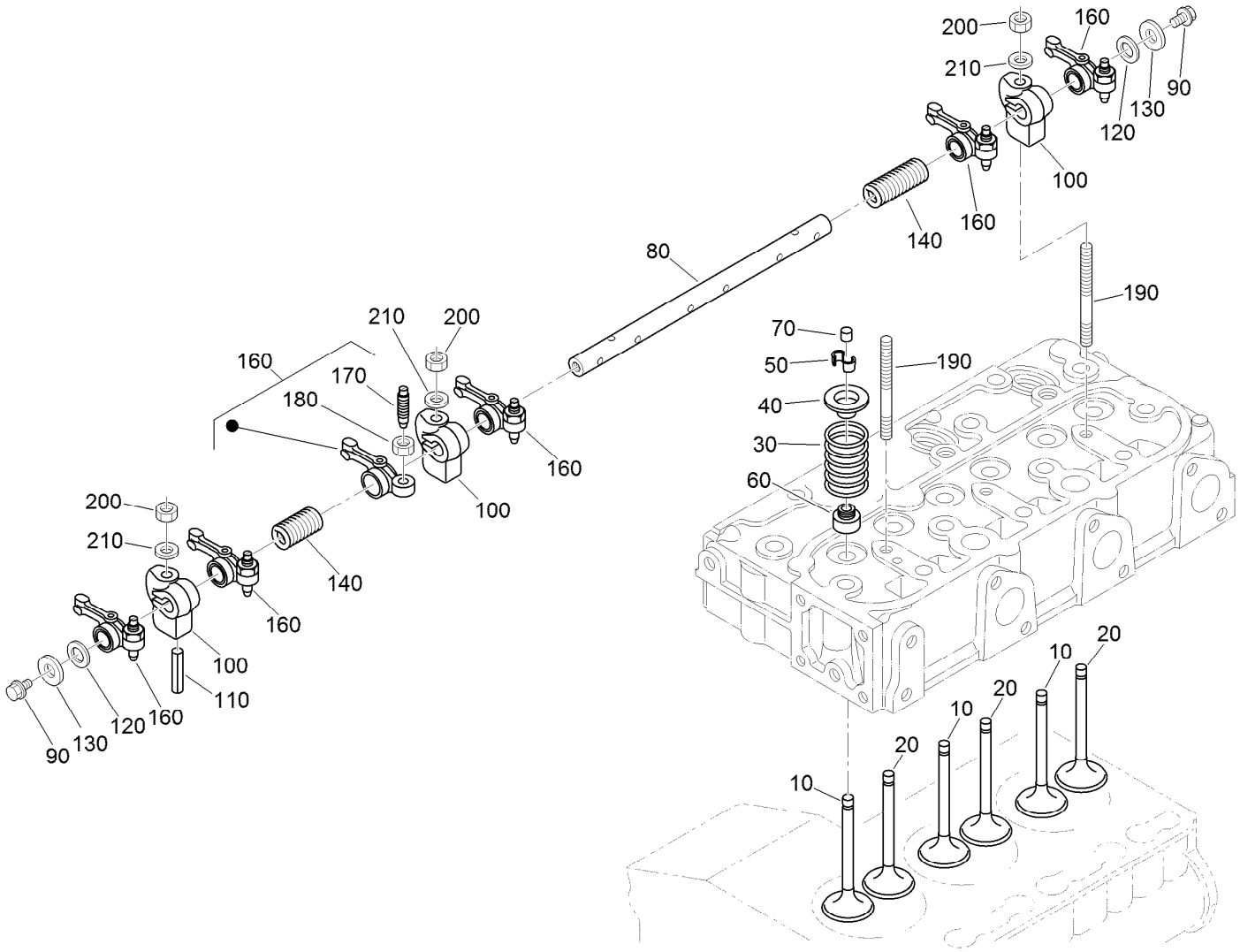


# Valve and Rocker Arm Assembly

| Ref. | Part Number | Qty. | Description |
|---|---|---|---|
| 10 | 112-7018 | 3 | Valve-Inlet |
| 20 | 120-2564 | 3 | Valve-Exhaust |
| 30 | 98-9648 | 6 | Spring-Valve |
| 40 | 107-9092 | 6 | Retainer-Spring |
| 50 | 117-7572 | 6 | Collet-Spring, Valve |
| 60 | 99-8385 | 6 | Seal-Stem, Valve |
| 70 | 98-9497 | 6 | Cap-Valve |
| 80 | 130-1248 | 1 | Shaft-Arm, Rocker |
| 90 | 99-8363 | 2 | Bolt-Flange |
| 100 | 98-9505 | 3 | Bracket-Arm, Rocker |

| Ref. | Part Number | Qty. | Description |
|---|---|---|---|
| 110 | 105-3758 | 1 | Pin-Spring |
| 120 | 98-9507 | 2 | Washer-Shaft, Rocker Arm |
| 130 | 110-3832 | 2 | Washer-Plain |
| 140 | 98-9504 | 2 | Spring-Arm, Rocker |
| 160 | 112-7020 | 6 | Rocker Arm ASM |
| 170 | 98-9502 | 6 | Screw-Adjusting |
| 180 | 98-9503 | 6 | Nut |
| 190 | 98-9506 | 3 | Stud |
| 200 | 98-9393 | 3 | Nut |
| 210 | 98-9385 | 3 | Washer-Flat |

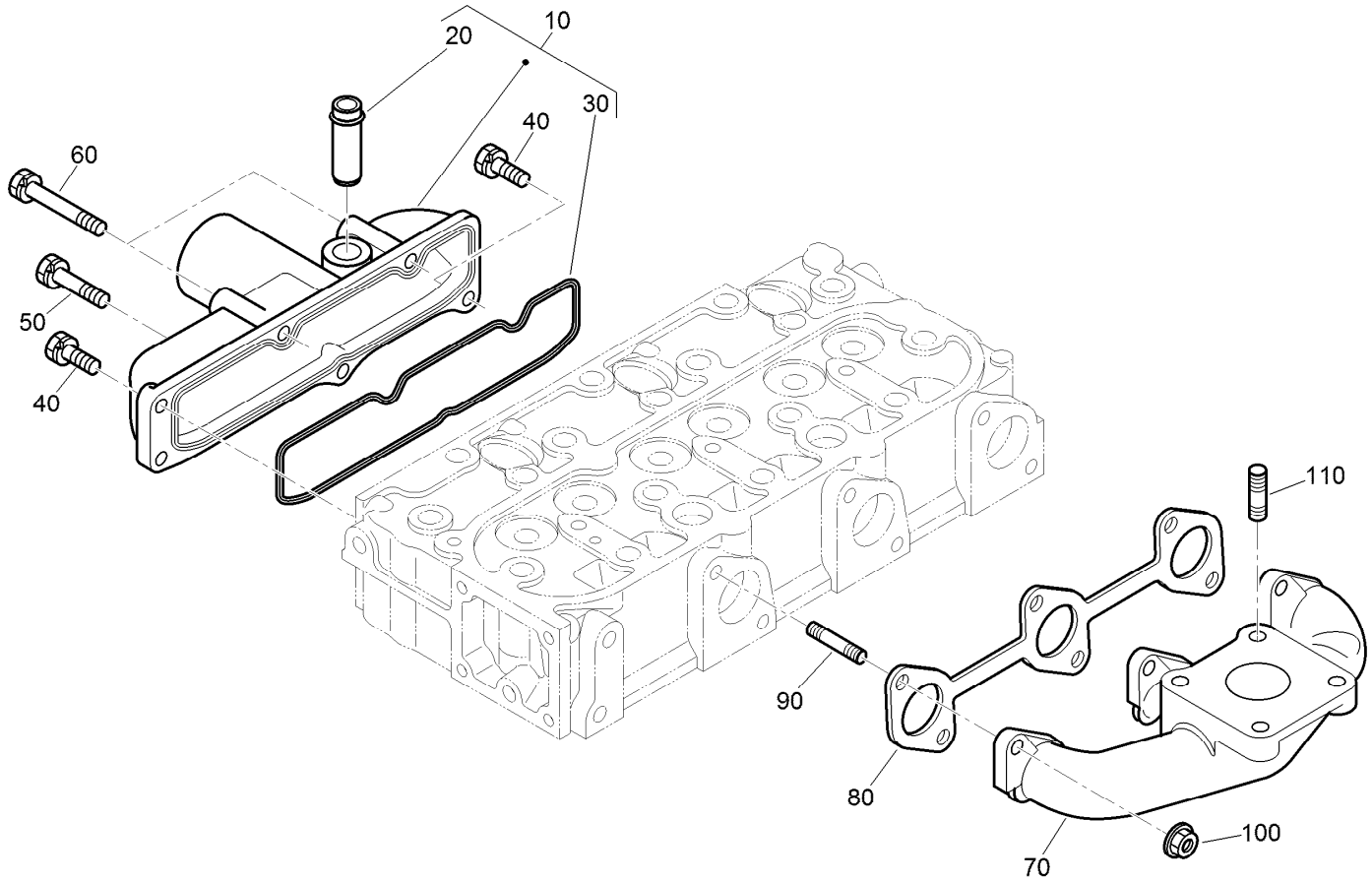


# Inlet and Exhaust Manifold Assembly

| *Ref.* | *Part Number* | *Qty.* | *Description* |
|---|---|---|---|
| 10 | 108-6577 | 1 | Inlet Manifold ASM |
| 20 | 98-9492 | 1 | Joint-Pipe, Breather |
| 30 | 98-9609 | 1 | Gasket-Manifold, Inlet |
| 40 | 127-0403 | 3 | Bolt-Flange |
| 50 | 98-9353 | 1 | Bolt |
| 60 | 125-9063 | 2 | Bolt-Sems |
| 70 | 107-9093 | 1 | Manifold-Exhaust |
| 80 | 99-8327 | 1 | Gasket-Manifold, Exhaust |
| 90 | 98-9588 | 6 | Stud |
| 100 | 98-9665 | 6 | Nut |
| 110 | 98-7769 | 4 | Stud |

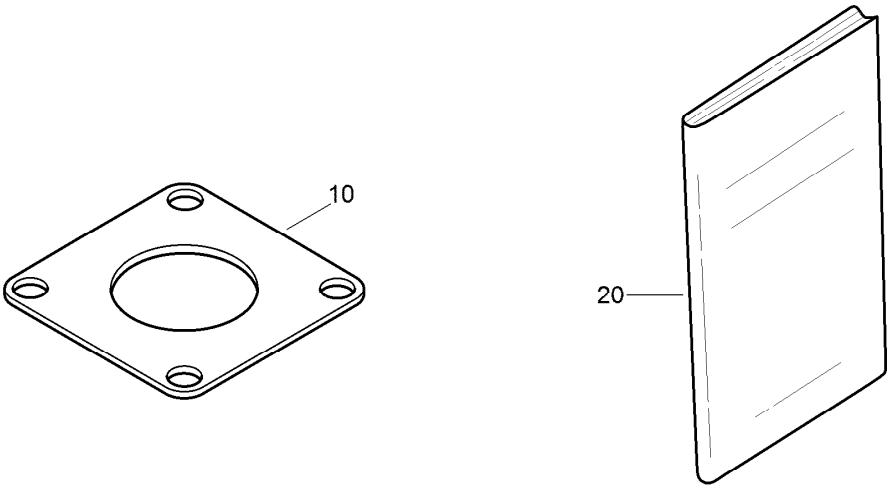


# Miscellaneous Engine Parts

| *Ref.* | *Part Number* | *Qty.* | *Description* |
|---|---|---|---|
| 10 | 99-8343 | 1 | Gasket-Muffler |
| 20 | 130-1543 | 1 | Operator Manual |

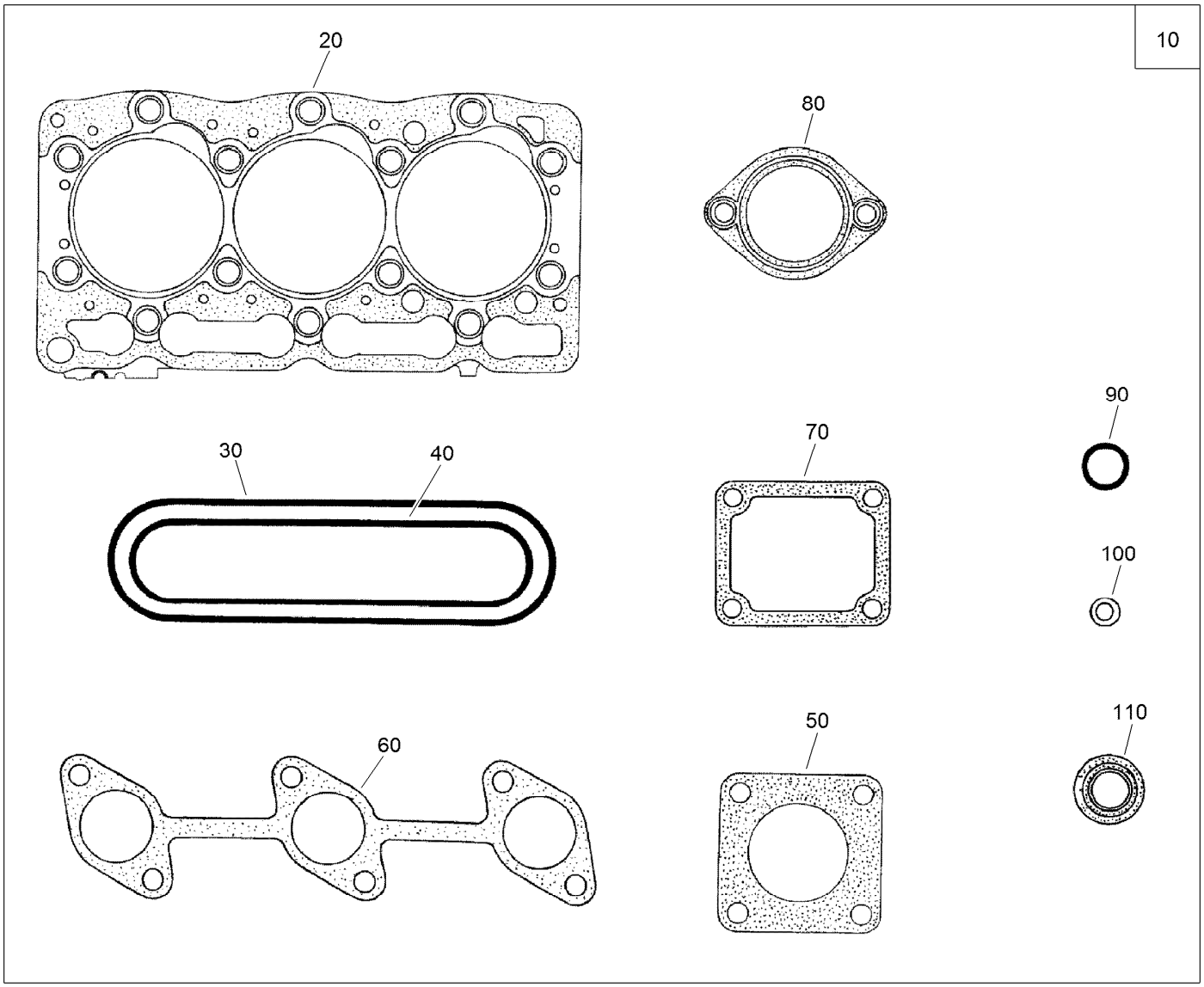


# Upper Engine Gasket Kit

| *Ref.* | *Part Number* | *Qty.* | *Description* |
|---|---|---|---|
| 10 | 130-1363 | 1 | *obs* Upper Gasket Kit |
| 20 | 108-6573 | 1 | Gasket-Head, Cylinder |
| 30 | 130-1249 | 1 | *obs* Gasket-Head Cover |
| 40 | 98-9609 | 1 | Gasket-Manifold, Inlet |
| 50 | 99-8343 | 1 | Gasket-Muffler |
| 60 | 99-8327 | 1 | Gasket-Manifold, Exhaust |
| 70 | 98-9638 | 1 | Gasket-Flange, Water |
| 80 | 105-3748 | 1 | Gasket-Thermostat |
| 90 | 99-3446 | 2 | O-Ring |
| 100 | 98-9454 | 3 | Gasket |
| 110 | 99-8385 | 6 | Seal-Stem, Valve |

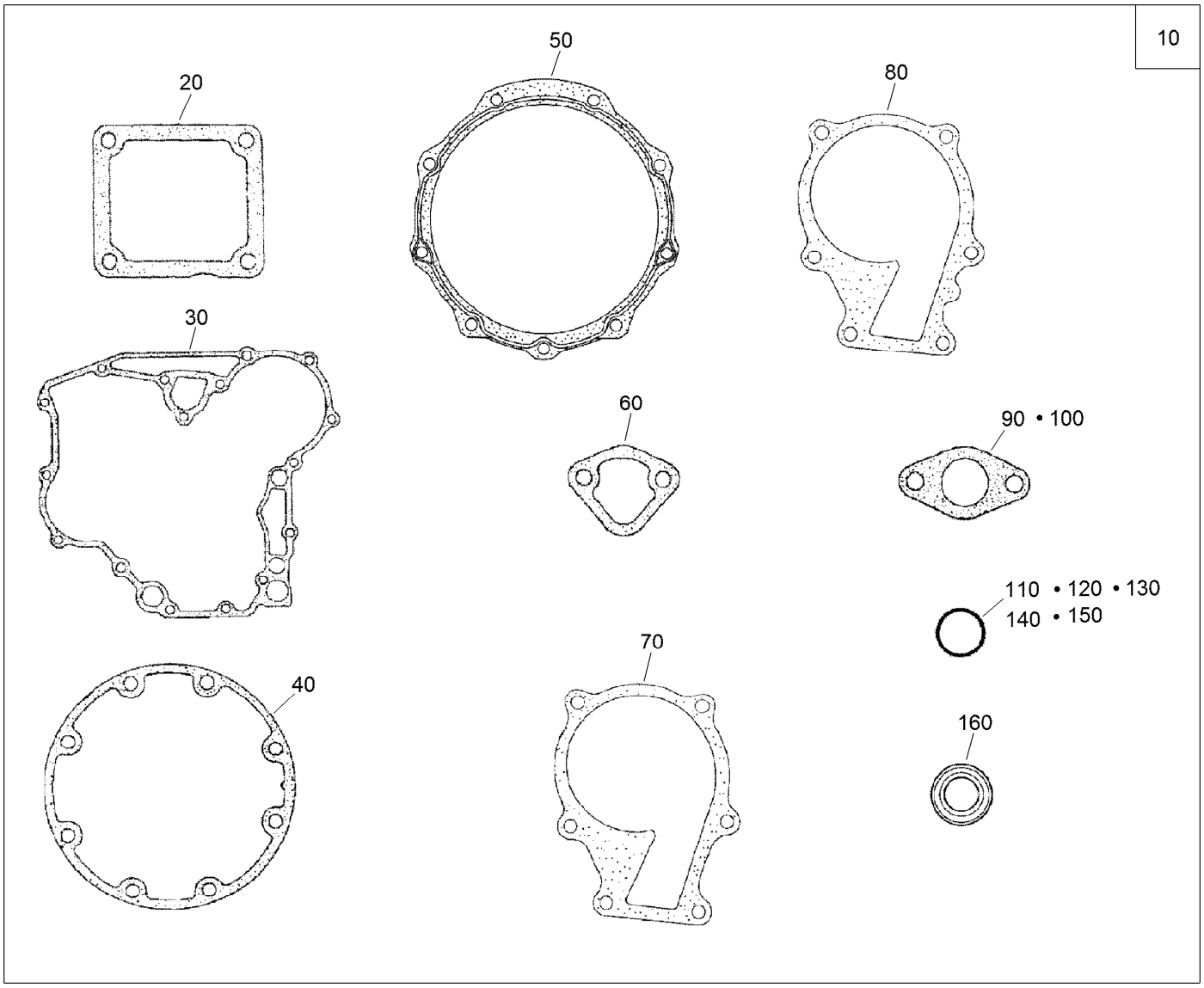


# Lower Engine Gasket Kit

| Ref. | Part Number | Qty. | Description |
|---|---|---|---|
| 10 | 130-1364 | 1 | Lower Gasket Kit |
| 20 | 98-9637 | 1 | Gasket |
| 30 | 98-9633 | 1 | Gasket-Case, Gear |
| 40 | 127-0440 | 1 | Gasket-Case, Bearing |
| 50 | 112-7037 | 1 | Gasket-Cover, Case |
| 60 | 117-7562 | 1 | Gasket-Pump, Fuel |
| 70 | 98-9632 | 1 | Gasket-Pump, Water |
| 80 | 99-3454 | 1 | Gasket-Pump, Water |

| Ref. | Part Number | Qty. | Description |
|---|---|---|---|
| 90 | 98-9682 | 1 | Gasket |
| 100 | 98-9683 | 1 | Gasket-Cover, Solenoid |
| 110 | 105-3781 | 2 | O-Ring |
| 120 | 105-3777 | 2 | O-Ring |
| 130 | 105-3783 | 1 | O-Ring |
| 140 | 105-3776 | 1 | O-Ring |
| 150 | 105-3788 | 1 | O-Ring |
| 160 | 98-7601 | 1 | Seal-Oil |

# Attachments and Accessories

## For 30495 Groundsmaster 7200 Series Traction Unit

| Product Name | Model/Part |
|---|---|
| Auxiliary Hydraulic Power Kit | 30380 |
| Auxiliary Power Unit | 30382 |
| Debris Blower | 30393 |
| Tooth Rake | 08751 |
| Finish Grader | 08754 |
| Drag Mat Carrier System | 08756 |
| Steel Drag Mat | 08757 |
| Coco Drag Mat | 08758 |
| 42-pound Weight, For Kit 114-4090 | 114-4096 |
| Premium Engine Oil 15w40 (5 Gallon Pail) | 121-6395 |
| Premium Engine Oil 15w40 (55 Gallon Drum) | 121-6394 |
| Green Diesel Cap | 107-2172 |
| Yellow Hydraulic Cap | 107-1576 |
| 5in Air Cleaner Safety Element | 114-4057 |
| Overflow Tank Kit | 117-5570 |
| Brake Service Kit | 120-0015 |
| Jack-Stand Kit | 30483 |
| Fender Kit | 117-9170 |
| Polar Trac Cab | 30371 |
| V-Plow Mounting Kit | 30378 |
| Polar Trac Kit | 30675 |
| 48in V-Plow | 30750 |
| TÜV Kit - Speed Decal 20kph | 02980 |
| TÜV Kit - German Vehicle Serial Plate | 02983 |
| Fuse-In Line | 111-5101 |
| CE Kit | 30240 |
| Blade-Belt Kit, 72in Side Discharge Deck | 105-7272 |
| 400-hour Filter Maintenance Kit | 30052 |
| Grass Collection System | 30460 |
| Spark Arrestor Kit | 112-1688 |
| Rear QAS | 30812 |
| 60-Amp Alternator Kit, Kubota 05 Series-Powered Traction Unit | 117-5540 |
| Wheel and Tire ASM (Semi Pneumatic) | 110-6406 |
| Weight Mount Bracket Kit | 114-4090 |
| Weight Bracket Kit | 125-2670 |
| Universal Sunshade | 30349 |
| Tire-Lug (24 X 12 - 12) | 103-6771 |
| Slow Moving Vehicle Kit | 114-4050 |
| North American Road Light Kit | 30374 |
| Recycler Kit, 60in Side Discharge Deck | 30348 |
| CE Kit, Grass Collection System | 117-9249 |
| 60in Side Discharge Mower | 30456 |
| Baffle, Blower Housing | 30658 |
| Blade-Belt Kit | 105-7270 |
| 62in Rear Discharge Completion Kit | 30463 |
| 62in Guardian Recycler Completion Kit | 30306 |

# Attachments and Accessories (continued)

62in Rotary Mower ..... 30457
62in CE Mower Cover Kit ..... 30683
Blade-Belt Kit, 72in Guardian Only ..... 105-7271
72in Rear Discharge Completion Kit ..... 30466
72in Guardian Recycler Completion Kit ..... 30304
72in Guardian Fine Recycler Completion Kit ..... 30346
72in Base Deck ..... 30353
72in Guardian and Rear Discharge CE Mower Cover Kit ..... 30685
Leaf Mulching Kit ..... 108-5273
Recycler Kit, 72in Side Discharge Deck ..... 30347
Striping Kit ..... 105-7273
72in Side Discharge Deck ..... 30481
72in Side Discharge Mower (CE) ..... 30354
CE Kit, 72in Side Deck With French Guards ..... 30679
Premium Transmission/Hydraulic Tractor Fluid (55 Gallon Drum) ..... 108-1183
100in Rear Discharge Deck ..... 31101
Premium Transmission/Hydraulic Tractor Fluid (5 Gallon Pail) ..... 108-1184
Adapter Kit for 100in Rear Discharge Deck ..... 31104
Leaf Mulching Kit for 100in Rear Discharge Deck ..... 31105
100in CE Mower Cover Kit ..... 30687

TORO®

Count on it.