Form No. 3379-953 Rev B

TORO®

Count on it.

Parts Catalog

GrandStand® Mower

With 122cm TURBO FORCE® Cutting Unit

Model No. 74568TE—Serial No. 314000001 and Up

Register at www.Toro.com.
Original Instructions (EN)

CE

3379-953 B

Ordering Replacement Parts

To order replacement parts, please supply the part number, the quantity, and the description of each part desired.

Understanding Reference Numbers

Each identified part in an illustration has a reference number. The reference number for a part also appears in the parts list, along with other information about the part.

This catalog uses two special reference number formats, one to indicate parts in a service assembly and another to indicate the quantity of a given part in an illustration.

Service Assembly Reference Numbers

Parts in service assemblies have reference numbers in the form a:b. The a represents the reference number of the entire service assembly and the b represents a sequential number unique to each part within the service assembly.

For example, a wheel assembly might be identified by reference number 6, the tire by 6:1, the valve by 6:2, and the wheel by 6:3. When you order the assembly identified by reference number 6, you receive all parts identified by reference numbers 6:1,6:2, and 6:3. However, you may also order any part individually. Reference numbers of this type appear in illustration and in parts lists.

Reference Numbers Indicating Quantity

In an illustration, if a reference number indicates more than one part, the reference number has the form nX y. The n represents the quantity of the part, the X is the multiplication symbol, and the y represents the reference number.

For example, in an illustration, the reference number 2X 37 means that two of the parts identified by reference number 37 are indicated.

List of Abbreviations

AR: as required

ASM: assembly

BBC: blade brake control

BHTF: button head thread forming

CARR: carriage

CCW: counter clockwise

CW: clockwise

DEG: degrees

DPA: Dual Point Adjustment

ECM: electronic control module

EXT: external

FH: flat head

GA: gauge

HD: heavy-duty

HF: hex flange

HH: hex head

HHF: hex head flange

HHFTF: hex head flange thread forming

HJ: hex jam

HLH: hex lag head

HOC: height-of-cut

HP: high pressure

HSBH: hex socket button head

HSFH: hex socket flat head

HSH: hex socket head

HWH: hex washer head

HWHTF: hex washer head thread forming

HYD: hydraulic

LH: left hand

LP: low pressure

LPG: Liquefied Petroleum Gas

NI: nylon insert

NPTF: national pipe thread fine

PFH: phillips flat head

PPH: phillips pan head

PPHTF: phillips pan head thread forming

PRH: phillips round head

PTH: phillips truss head

PTO: power-take-off

RH: right hand

ROPS: roll-over protection system

RRB: rear roller brush

SFH: slotted fillister head

SHH: slotted hex head

SHWH: slotted hex washer head

SPH: slotted pan head

SQH: square head

SRH: slotted round head

STD: standard

TAP: self tapping

TTH: torx truss head

Contents

Frame Assembly 4
Wheel and Bearing Assembly No. 112-3810 6
Parking Brake Assembly 8
Decklift Assembly 10
Cushion and Platform Assembly 12
Cushion Assembly No. 130-1768 14
Platform Assembly No. 117-9640 16
Ground Drive Assembly 18
Hydraulic Wheel Motor Assembly No. 120-8486 20
Pump Idler Assembly 22
Hydraulic System Assembly 24
Hydraulic Pump Assembly No. 125-4672 26
Control Assembly 28
Engine Assembly 30
Fuel Tank Assembly 32
Vent Hose Assembly 34
Electrical Assembly 36
Deck Assembly 38
Deck Decal Assembly No. 120-6403 40
Idler Arm Assembly No. 120-6410 42
Idler Adjust Assembly No. 117-0446 44
Spindle Assembly No. 119-8560 46
Deflector Assembly No. 120-2451 48
Attachments and Accessories 50

© 2015—The Toro® Company
8111 Lyndale Avenue South
Bloomington, MN 55420

Contact us at www.Toro.com.
Printed in the USA.
All Rights Reserved

Frame Assembly

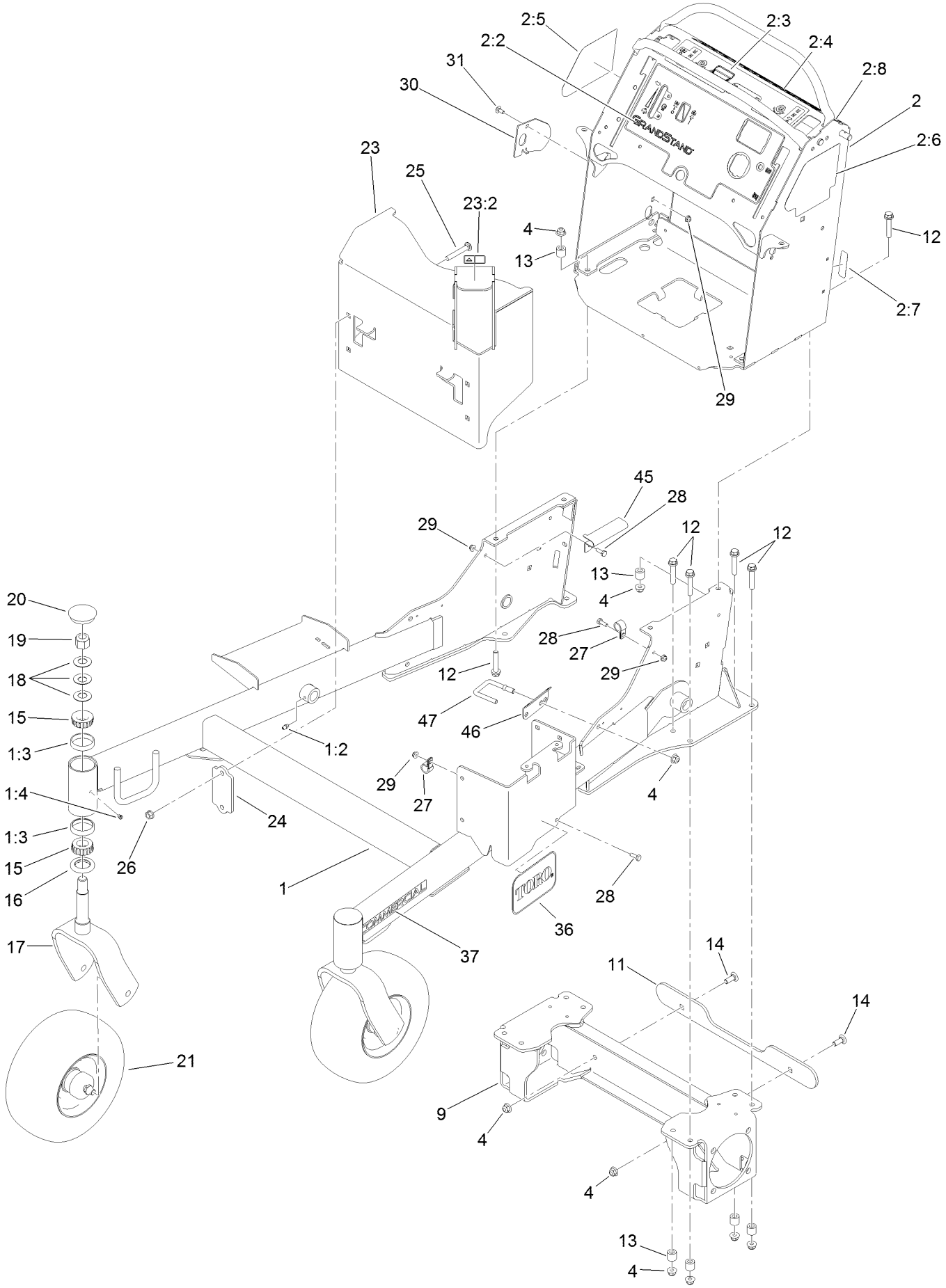

Frame Assembly (continued)

Ref.	Part Number	Qty.	Description
1	119-8700	1	Front Frame ASM
1:2	302-5	4	Fitting-Grease
1:3	1-543508	4	Cup-Bearing
1:4	1-811010	2	Plug
2	120-6470	1	Control Tower ASM
2:2	120-6464	1	Decal-Panel, Control
2:3	119-8727	1	Decal-Opc
2:4	117-3626	1	Decal-Warning
2:5	119-7247	1	Decal-HOC
2:6	119-7285	1	Decal-Service Aid, Ce
2:7	116-3267	1	Decal-Fuse
2:8	119-8663	1	Decal-Stability, Ce
4	104-8301	16	Nut-Flange, NI
9	116-9560-01	1	Frame-Motor
11	126-1364-01	1	Plate-Spacer, Bumper
12	108-3742	12	Screw-HHF
13	121-1760	12	Spacer
14	3231-22	2	Screw-CARR
15	1-543509	4	Bearing-Roller, Tapered
16	116-5647	2	Seal-Grease
17	121-7988-01	2	Fork-Caster
18	1-633508	6	Washer-Bellville
19	3296-51	2	Nut-Lock, NI
20	103-4882	2	Cap-Grease
21	112-3810	2	Wheel/Tire And Bearing ASM
23	116-8739	1	Muffler Guard ASM
23:2	106-5517	1	Decal-Warning, Hot Surface
24	119-7303-01	2	Bracket-Mounting, Guard
25	3231-31	4	Screw-CARR
26	32128-21	4	Nut-HF
27	2412-87	2	Clamp-Cable
28	321-4	3	Screw-HH
29	104-7201	4	Nut-Flange, NI
30	119-7312	1	Plate-Striker
31	3229-11	1	Screw-CARR
36	68-3640	1	Decal
37	117-3591	2	Decal-Commercial
45	116-5067	1	Bracket-Hose, Fuel (Double)
46	121-6003	2	Guard-Hose
47	121-6004	2	Guide-Hose

Wheel and Bearing Assembly No. 112-3810

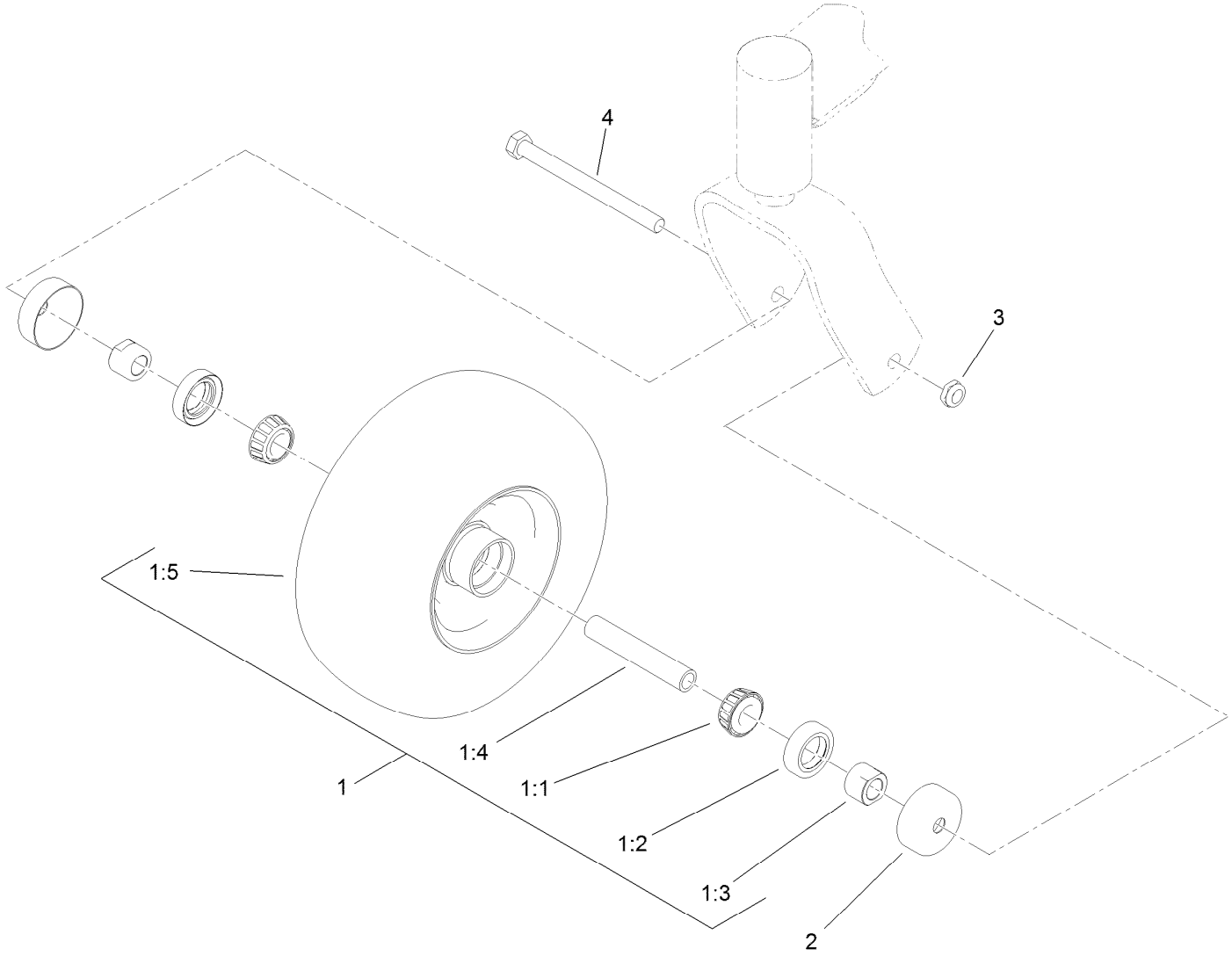

Wheel and Bearing Assembly No. 112-3810 (continued)

Ref.	Part Number	Qty.	Description
1		1	Wheel And Bearing ASM ●
1:1	1-633585	2	Bearing-Cone, Taper
1:2	103-0063	2	Seal-Caster
1:3	103-3051	2	Spacer-Nut ■
1:4	103-3157	1	Axle-Caster
1:5	110-9965	1	Wheel And Tire ASM
2	103-2768	2	Guard-Seal
3	3296-45	1	Nut-Lock, NI
4	325-20	1	Screw-HH

● Not serviced separately
■ Use Pro-Lock, Nut Type (P/N 1-840022, .5ml tube) on spacer nut

Parking Brake Assembly

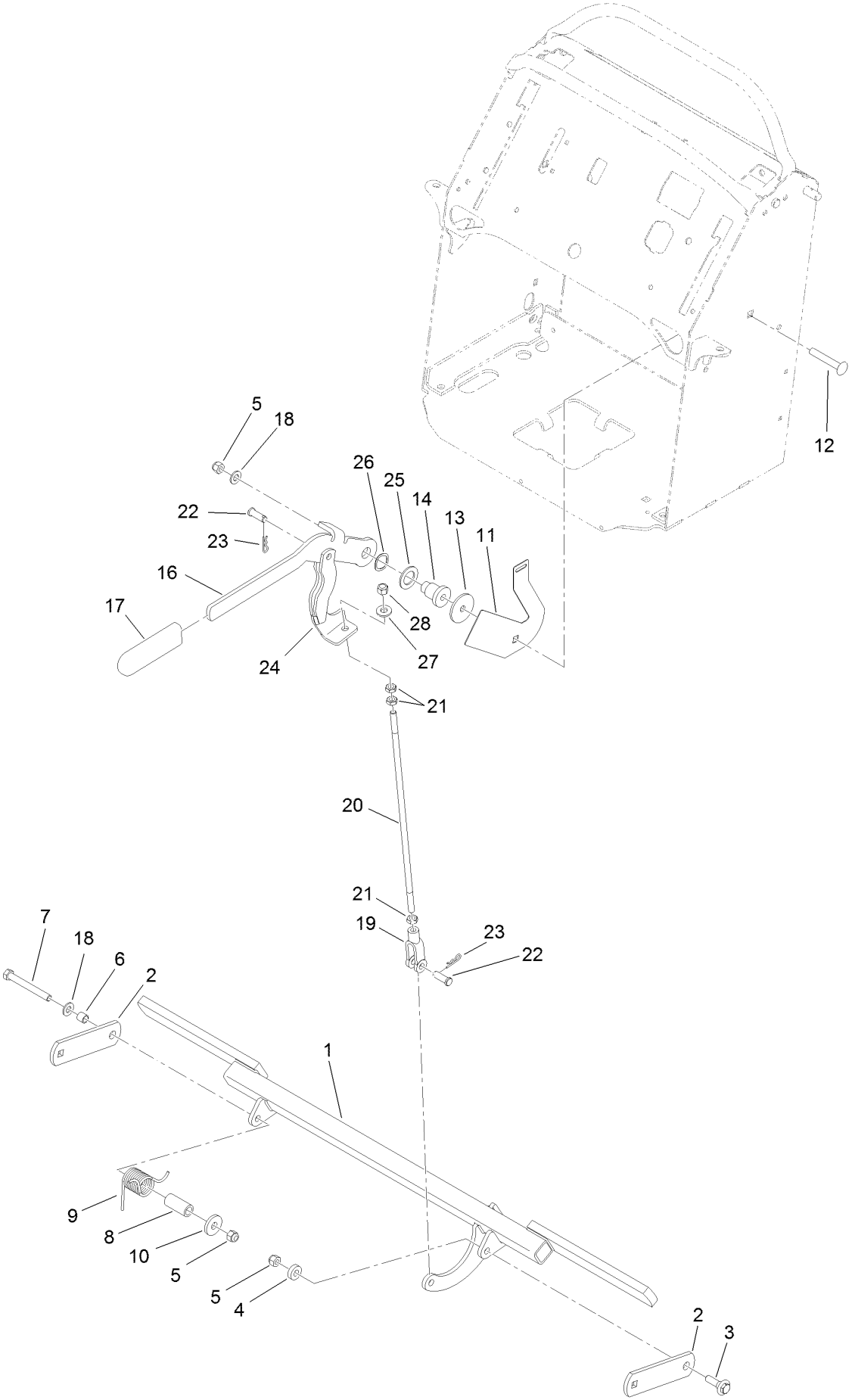

Parking Brake Assembly (continued)

Ref.	Part Number	Qty.	Description
1	119-8730-03	1	Bar-Brake
2	114-5186-01	2	Support-Brake
3	614672	1	Bolt-Shoulder
4	5-0652	1	Spacer
5	104-8301	3	Nut-Flange, NI
6	117-9684	1	Spacer
7	323-20	1	Screw-HH
8	117-9683	1	Spacer
9	117-9682	1	Spring-Torsion
10	1-373034	1	Washer
11	117-0452-03	1	Plate-Switch, Brake
12	3231-44	1	Screw-CARR
13	63-7400	1	Washer-Rebound
14	106-3214	1	Mount-Pulley
16	117-5759-03	1	Lever-Brake
17	1-633268	1	Grip-Lever
18	3256-24	2	Washer-Flat
19	1-633131	1	Yoke-Linkage, Brake
20	119-7244	1	Rod-Brake
21	3220-3	3	Nut-HJ
22	283-2	2	Pin-Clevis
23	3290-307	2	Pin-Cotter
24	119-8780-03	1	Arm-Brake
25	1-303007	1	Washer
26	119-4164	1	Washer-Wave
27	98-5975	1	Washer-Belleville
28	3296-6	1	Nut-Lock

Decklift Assembly

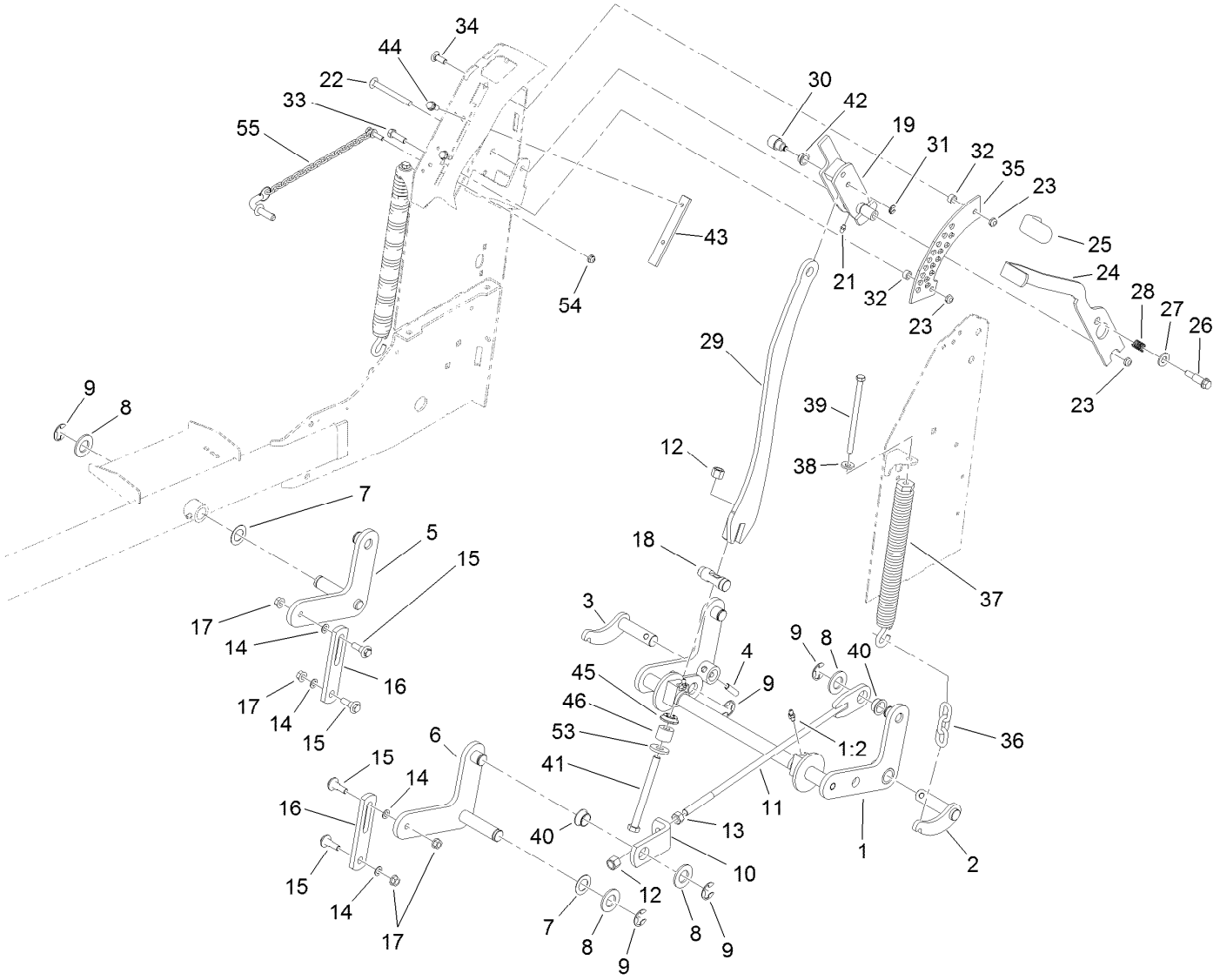

Decklift Assembly (continued)

Ref.	Part Number	Qty.	Description
1	116-3103	1	Rear Crossshaft ASM
1:2	302-11	2	Fitting-Lube, 45 DEG
2	116-3104-01	1	Shaft-Pivot, LH
3	116-3105-01	1	Shaft-Pivot, RH
4	116-3107	2	Pin-Spiral
5	121-5994-01	1	Arm-Lift, RH
6	121-5993-01	1	Arm-Lift, LH
7	110-6767	2	Washer-Thrust
8	3256-29	6	Washer-Flat
9	32151-103	7	Ring-Retaining, EXT
10	116-2901	2	Bracket-Lift Rod
11	116-8676	2	Lift Rod ASM
12	3296-23	3	Nut-Lock, NI
13	3217-9	2	Nut-HH
14	40-1940	4	Washer
15	109-9840	4	Screw-Shoulder, HHF
16	117-0519	2	Link-Lift
17	32128-21	4	Nut-HF
18	114-5274	1	Pin-HOC
19	114-3512	1	HOC Handle ASM
21	302-5	1	Fitting-Grease
22	3231-24	1	Screw-CARR
23	3296-59	3	Nut-Lock, NI
24	114-1878-03	1	Lever-HOC
25	1-633268	1	Grip-Lever
26	66-0561	1	Screw-Shoulder
27	3256-26	1	Washer-Flat
28	65-9940	1	Spring
29	116-2939	1	Bar-Lift
30	116-3048	1	Hub-Pivot
31	32151-47	1	Ring-Retaining
32	111044	2	Spacer
33	323-7	1	Screw-HH
34	3231-22	1	Screw-CARR
35	114-5307	1	Bracket-HOC
36	103-9859	2	Chain-Decklift
37	116-0886	2	Extension Spring ASM
38	98-5975	2	Washer-Belleville
39	323-58	2	Bolt-TAP, HH
40	116-2909	4	Bearing-Flange
41	325-22	1	Screw-HH
42	116-3047	1	Bearing-Flange
43	116-3124	1	Skid-Handle, Lift
44	32144-70	2	Screw-HWHTF
45	116-3625	1	Seat-Spring
46	116-3241	1	Spring-Urethane
53	92-2651	1	Washer
54	104-7201	1	Nut-Flange, NI
55	114-0409	1	HOC Pin ASM

Cushion and Platform Assembly

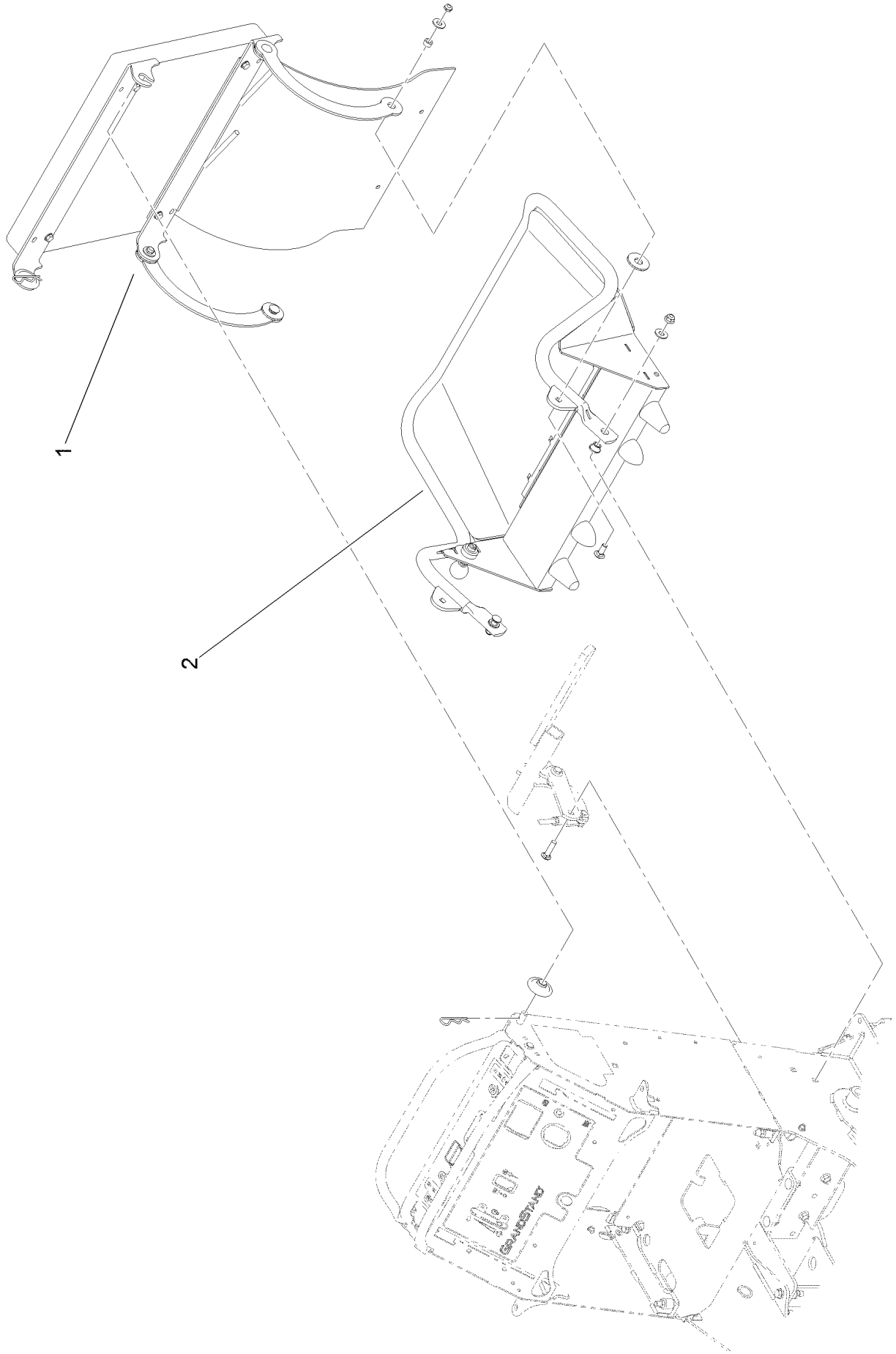

Cushion and Platform Assembly (continued)

Ref.	Part Number	Qty.	Description
1	130-1768	1	Cushion ASM
2	117-9640	1	Platform ASM

Cushion Assembly No. 130-1768

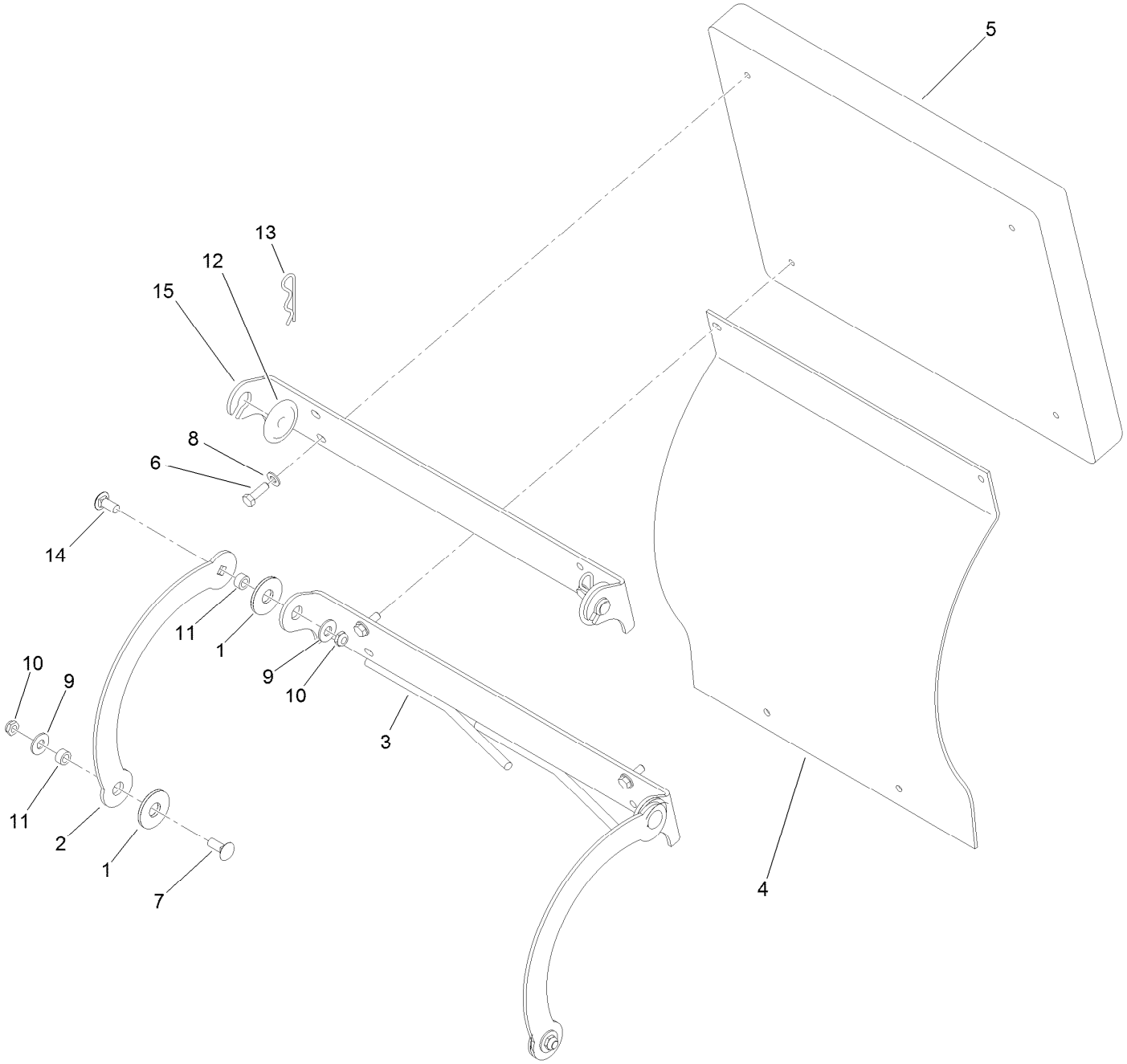

Cushion Assembly No. 130-1768 (continued)

Ref.	Part Number	Qty.	Description
1	114-0463	4	Washer-Friction, Composite
2	114-1915-01	2	Link-Pad
3	119-7369-03	1	Hinge-Lower
4	130-1769	1	Shield-Rear
5	117-9739	1	Pad-Cushion
6	121-7999	4	Screw-HH
7	3231-2	2	Bolt-CARR
8	3256-23	4	Washer-Flat
9	3256-4	4	Washer-Flat
10	3296-59	4	Nut-Lock, NI
11	111044	4	Spacer
12	116-2886	2	Slide-Bushing
13	3290-355	2	Pin-Hair
14	3231-27	2	Screw-CARR
15	116-2757-03	1	Hinge-Pad

Platform Assembly No. 117-9640

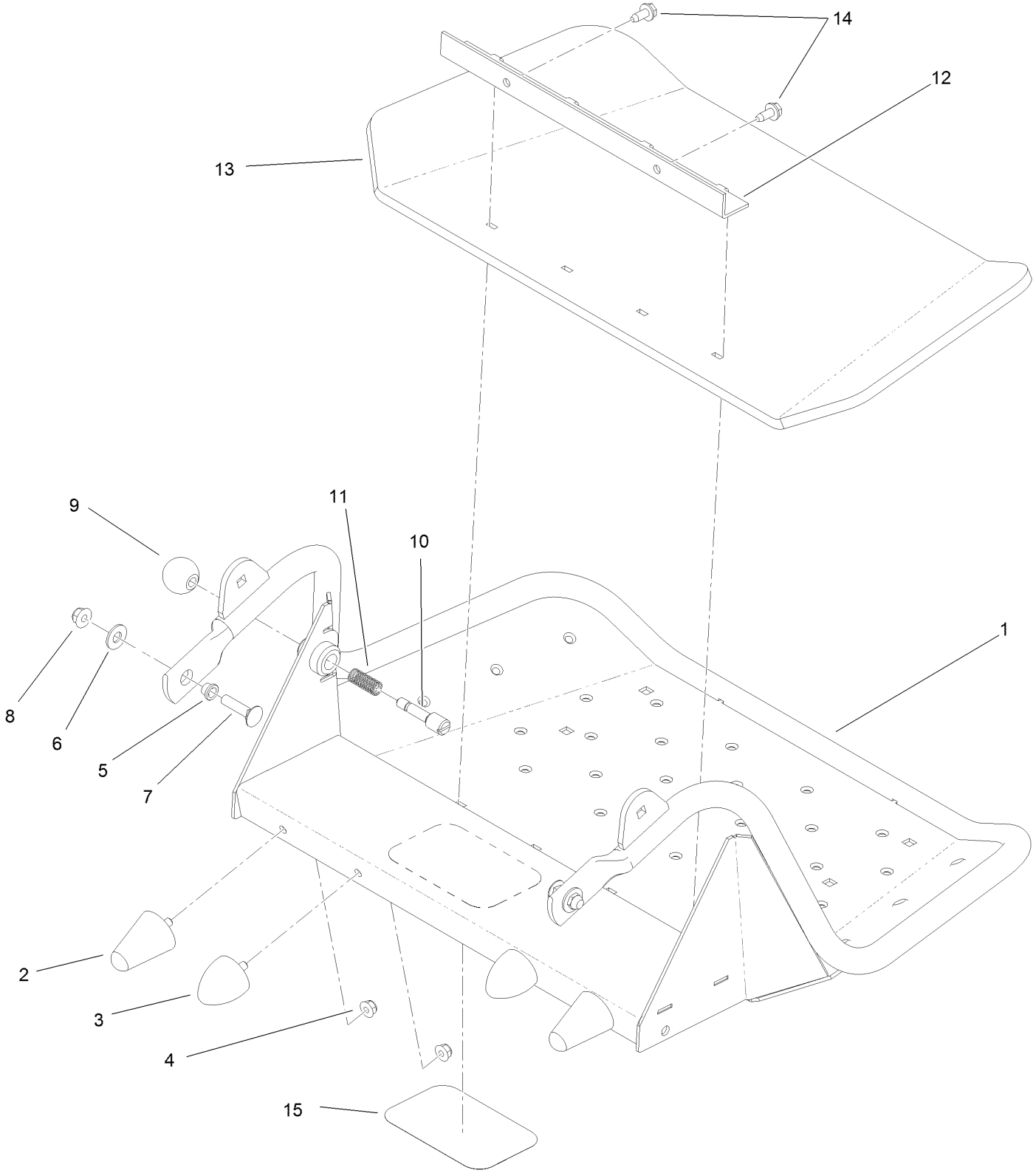

Platform Assembly No. 117-9640 (continued)

Ref.	Part Number	Qty.	Description
1	117-9641-01	1	Platform
2	114-1925	2	Bumper-Rubber
3	114-1926	2	Bumper-Rubber
4	104-8300	4	Nut-Flange, NI
5	109-8788	2	Bushing-Flanged
6	3256-4	2	Washer-Flat
7	3231-4	2	Screw-CARR
8	104-8301	2	Nut-Flange, NI
9	1-603175	1	Knob-Ball
10	119-8650	1	Pin-Latch
11	114-5348	1	Spring
12	114-1920-03	1	Clamp-Shield
13	114-5349	1	Mat-Foot
14	32144-70	2	Screw-HWHTF
15	68-3640	1	Decal

Ground Drive Assembly

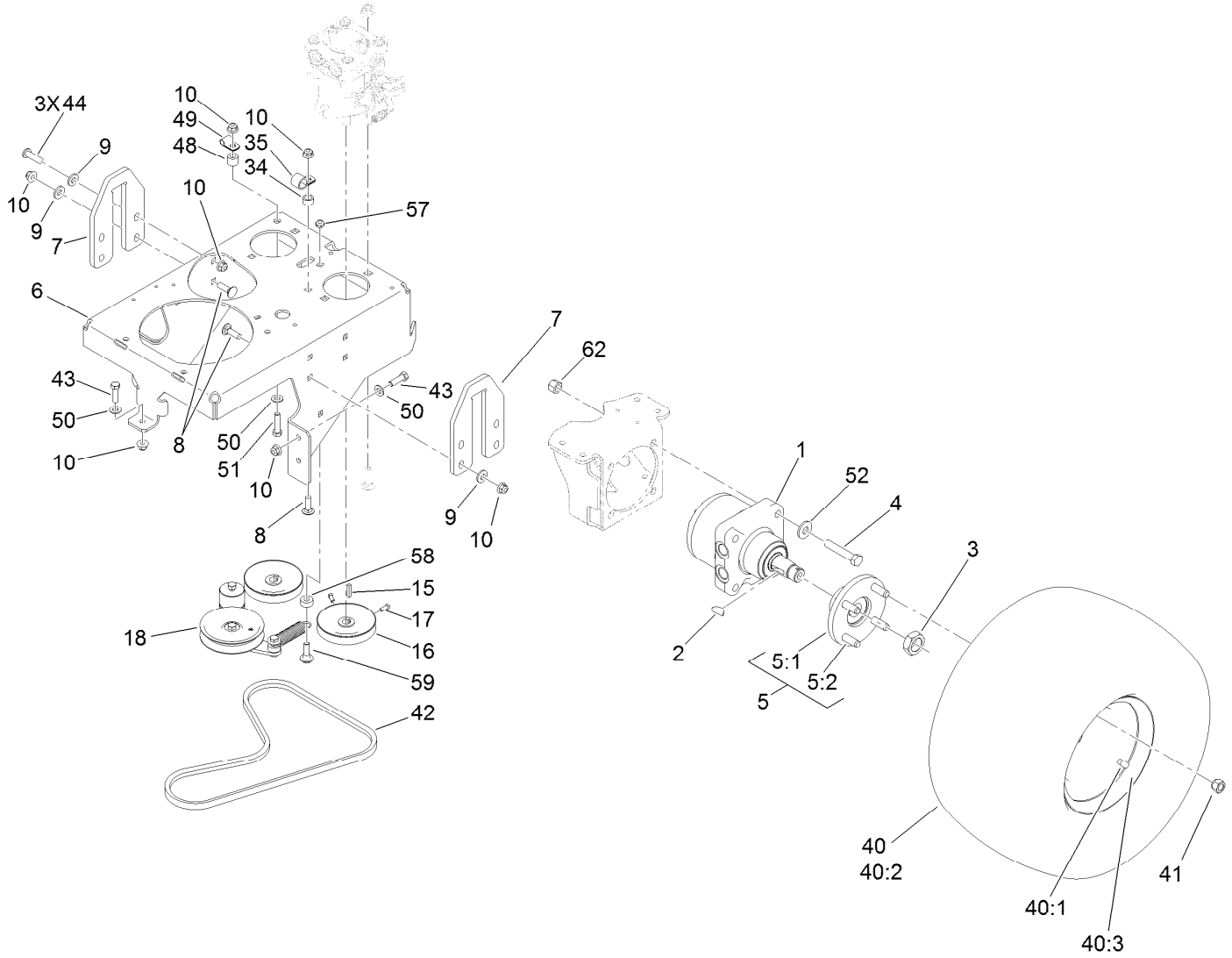

Ground Drive Assembly (continued)

Ref.	Part Number	Qty.	Description
1	120-8486	2	Motor-Wheel
2	3257-42	2	Key-Woodruff
3	106-8159	2	Nut-Lock
4	325-11	8	Screw-HH
5	18-3209	2	Wheel Hub / Stud ASM
5:1	10-6870-03	1	Hub-Wheel
5:2	10-6830	4	Stud-Type, Drive
6	120-6456-01	1	Base-Engine
7	119-8662	2	Plate-Lift
8	3231-25	6	Bolt-CARR
9	98-5975	8	Washer-Belleville
10	104-8301	15	Nut-Flange, NI
15	1-807272	2	Key
16	105-5648	2	Pulley-Pump
17	3241-5	4	Screw-Set
18		1	Pump Idler ASM ●
34	1-653069	1	Spacer-Wheel
35	1-633396	1	Clip-Loom

Ref.	Part Number	Qty.	Description
40	120-6465	2	Wheel/Tire ASM
40:1	116-4605	1	Rim-8 Inch
40:2	120-6466	1	Tire
40:3	232-27	1	Stem-Valve
41	242-50	8	Nut-Lug
42	114567	1	Belt-V, Lower PTO
43	3234-42	5	Screw-HHF
44	3274-63	3	Screw-HSBH
48	121-1760	1	Spacer
49	116-3362	1	Clip-Tube
50	3256-24	1	Washer-Flat
51	323-8	1	Screw-HH
52	1-513435	8	Washer-Spring
57	3296-59	1	Nut-Lock, NI
58	104-8426	1	Spacer
59	614672	1	Bolt-Shoulder
62	3296-23	8	Nut-Lock, NI

● Not serviced separately

Hydraulic Wheel Motor Assembly No. 120-8486

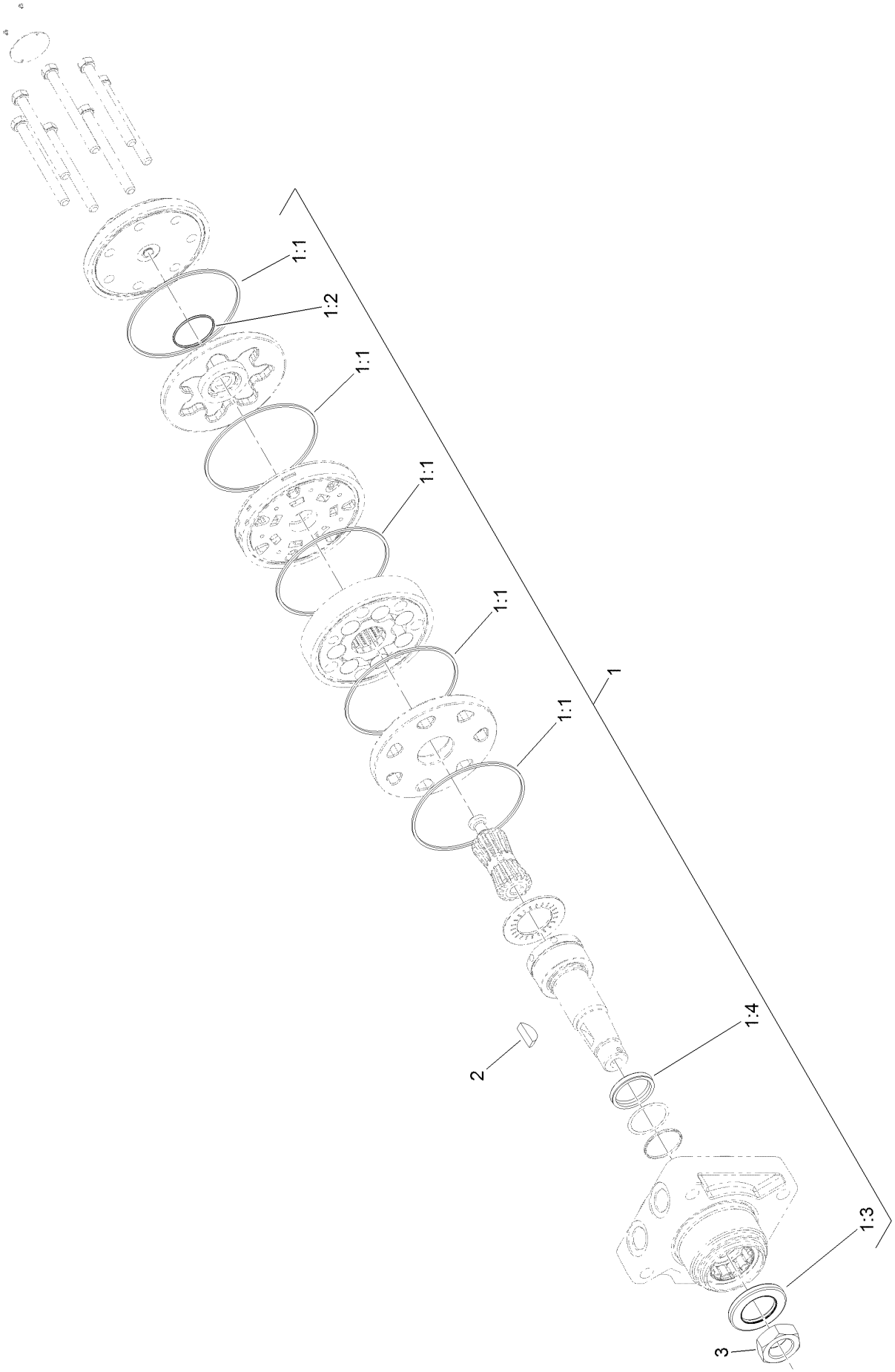

Hydraulic Wheel Motor Assembly No. 120-8486 (continued)

Ref.	Part Number	Qty.	Description
1	130-1788	1	Seal Kit
1:1		5	Seal-Ring, Viton ●
1:2		1	Seal-Commutator ●
1:3		1	Seal-Dirt/Water, Hi Temp ●
1:4		1	Seal-Shaft ●
2	3257-42	1	Key-Woodruff
3	106-8159	1	Nut-Lock

● Not serviced separately

Pump Idler Assembly

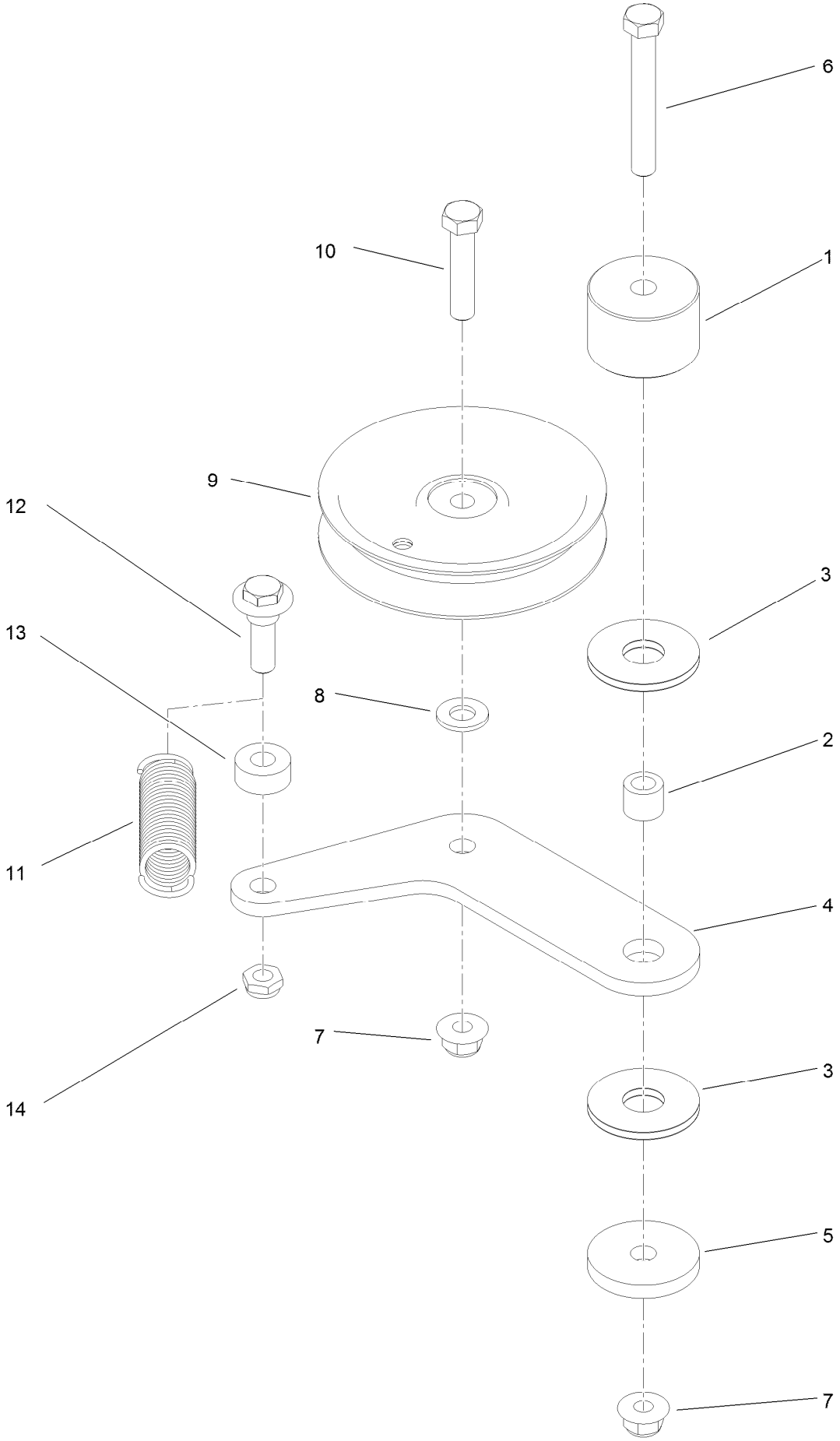

Pump Idler Assembly (continued)

Ref.	Part Number	Qty.	Description
1	116-7599	1	Hub, Idler
2	1-413088	1	Bushing-Lever, Lift
3	114-0463	2	Washer-Friction, Composite
4	119-8737	1	Plate-Idler
5	110-9981	1	Washer-Plain
6	323-13	1	Screw-HH
7	104-8301	2	Nut-Flange, NI
8	3256-24	1	Washer-Flat
9	93-1622	1	Pulley-Idler
10	323-9	1	Screw-HH
11	108-4056	1	Spring-Extension
12	614672	1	Bolt-Shoulder
13	104-8426	1	Spacer
14	3296-59	1	Nut-Lock, NI

Hydraulic System Assembly

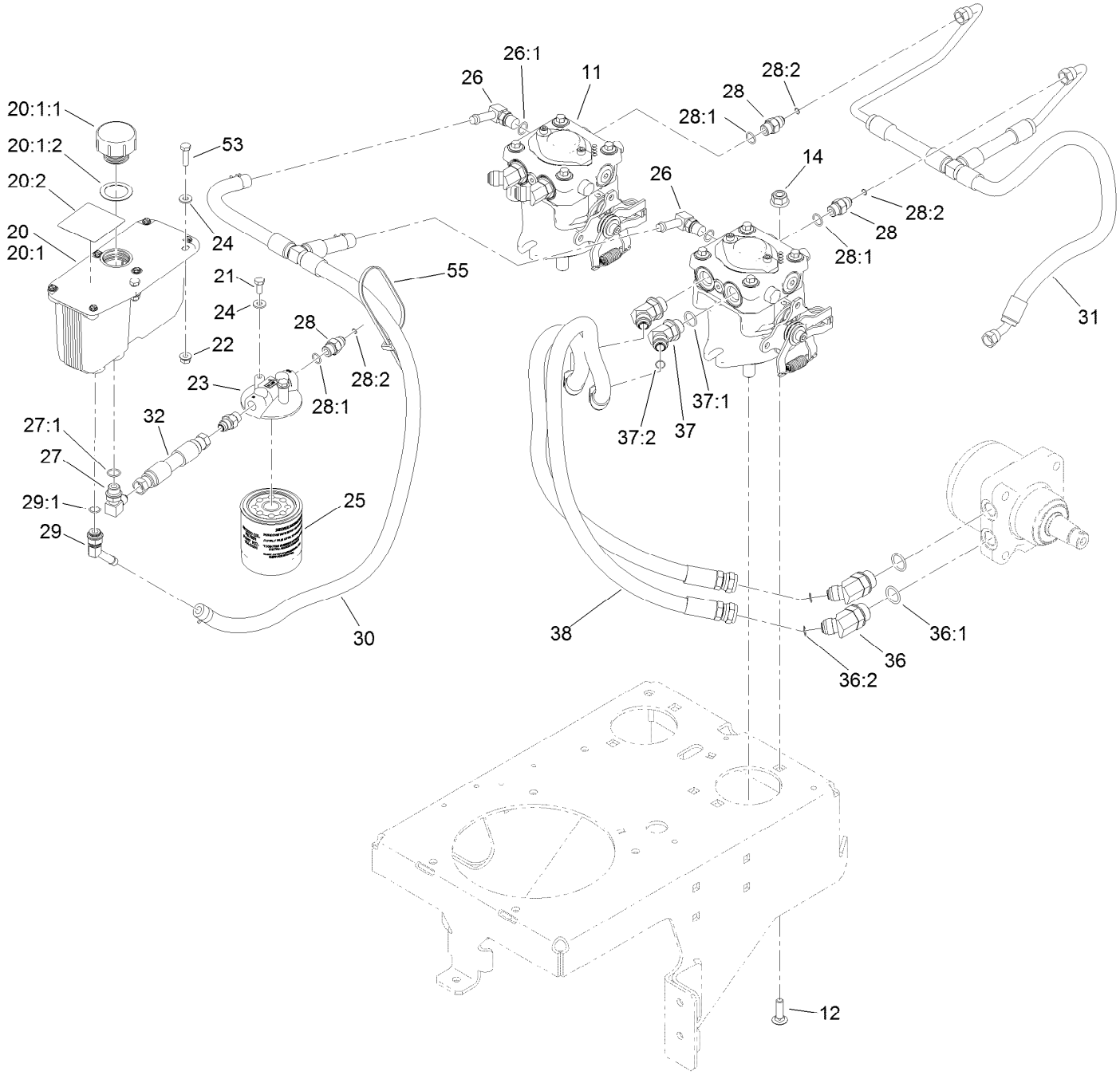

Hydraulic System Assembly (continued)

Ref.	Part Number	Qty.	Description
11	125-4672	2	Hydraulic Pump ASM
12	3232-3	4	Bolt-CARR
14	114-8417	4	Nut-HF, NI
20	107-8433	1	HYD Reservoir ASM
20:1		1	Reservoir-HYD ●
20:1:1	103-1948	1	Cap-Reservoir, HYD
20:1:2	103-1949	1	Gasket-Cap
20:2	115-4212	1	Decal-Warning
21	321-3	2	Screw-HH
22	32128-32	2	Nut-HHF
23	104-7836	1	Head-Filter
24	3256-22	4	Washer-Flat
25	114-3494	1	Element-Filter, 25 Micron
26	100-4887	2	Fitting-Barbed, 90 DEG
26:1	237-42	1	O-Ring
27	103-1802	1	Fitting-HYD, 90 DEG
27:1	1-603921	1	O-Ring

Ref.	Part Number	Qty.	Description
28	103-2156	4	Fitting-Straight
28:1	1-603921	1	O-Ring
28:2	103-1020	1	O-Ring
29	103-1807	1	Fitting-Barbed, 45 DEG
29:1	237-42	1	O-Ring
30	121-5969	1	Case Drain Hose ASM
31	121-5968	1	Charge Hose ASM
32	116-2604	1	HYD Hose ASM
36	1-523222	4	Fitting-HYD, 45 DEG
36:1	1-603919	1	O-Ring
36:2	1-603992	1	O-Ring
37	1-523221	4	Fitting-HYD, 45 DEG
37:1	1-603920	1	O-Ring
37:2	1-603992	1	O-Ring
38	116-6902	4	HYD Hose ASM
53	321-6	2	Screw-HH
55	3290-378	1	Tie-Cable

● Not serviced separately

Hydraulic Pump Assembly No. 125-4672

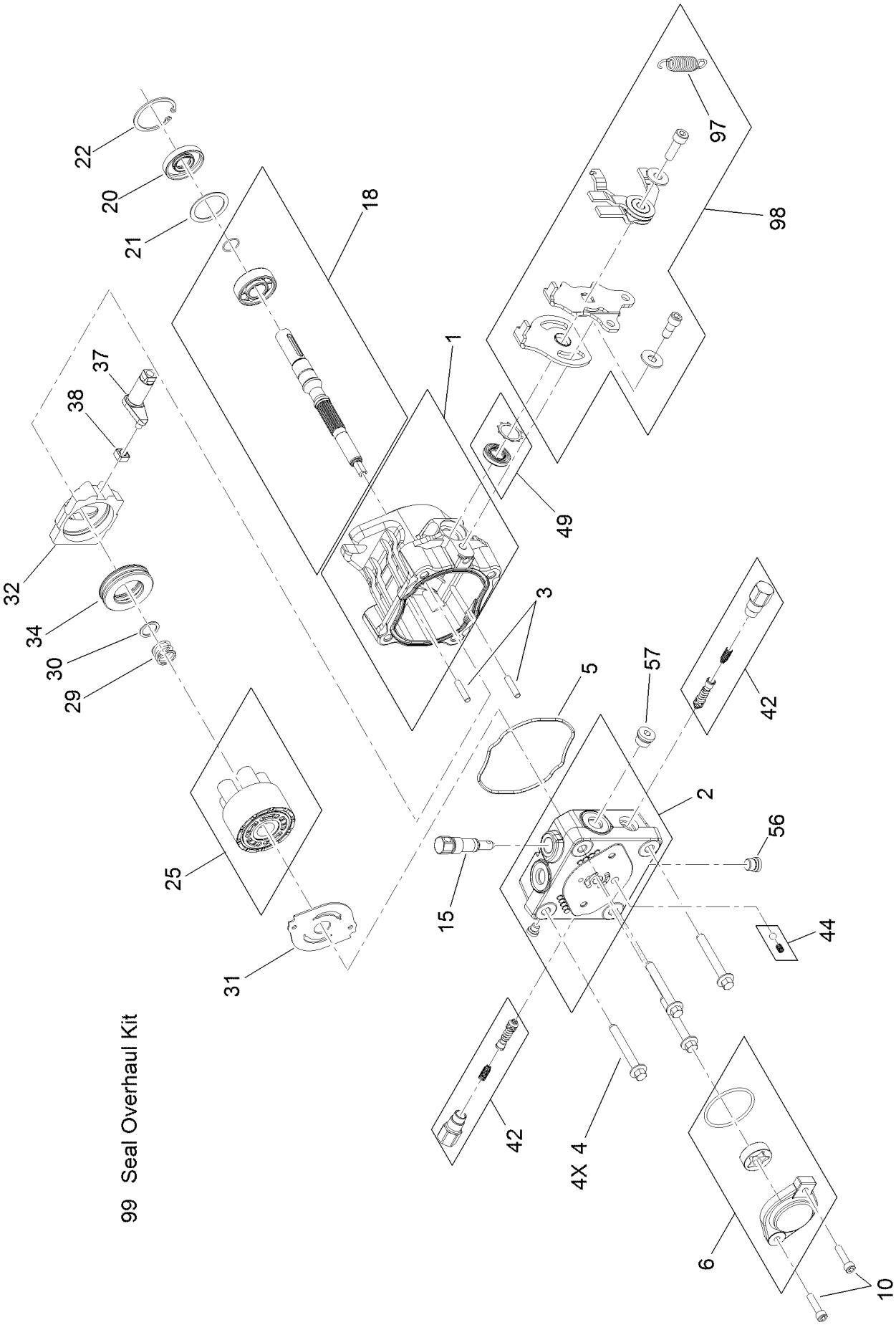

Hydraulic Pump Assembly No. 125-4672 (continued)

Ref.	Part Number	Qty.	Description
1	115-4464	1	Housing Kit
2	106-8752	1	End Cap Kit (W/Poppets)
3	106-8753	2	Pin-Headless, Straight
4	106-8754	4	Bolt-HF
5	125-4682	1	O-Ring
6	106-8756	1	Charge Pump Kit
10	104-2111	2	Capscrew
15	106-8759	1	Bypass Valve Kit
18	103-2664	1	Input Shaft Kit
20	104-5310	1	Seal-Lip
21	104-5308	1	Spacer
22	104-5309	1	Ring-Retaining
25	103-2666	1	Cylinder Block Kit
29	94-1936	1	Spring-Block
30	94-1937	1	Washer-Thrust
31	105-6185	1	Plate-Valve
32	94-1907	1	Swashplate-Variable
34	94-6922	1	Bearing-Thrust
37	115-4458	1	Arm-Trunnion, Tapered Square
38	94-1910	1	Guide-Slot
42	125-4683	2	Shock Valve Kit
44	112-4164	1	Charge Relief Kit
49	106-8761	1	Trunnion Seal / Retainer Kit
56	106-8762	1	Plug-HSH
57	104-2189	1	Plug-Thread, Straight
97	125-4684	1	Spring-Extension
98	115-4046	1	Return Kit
99	105-6184	1	Seal Overhaul Kit

Control Assembly

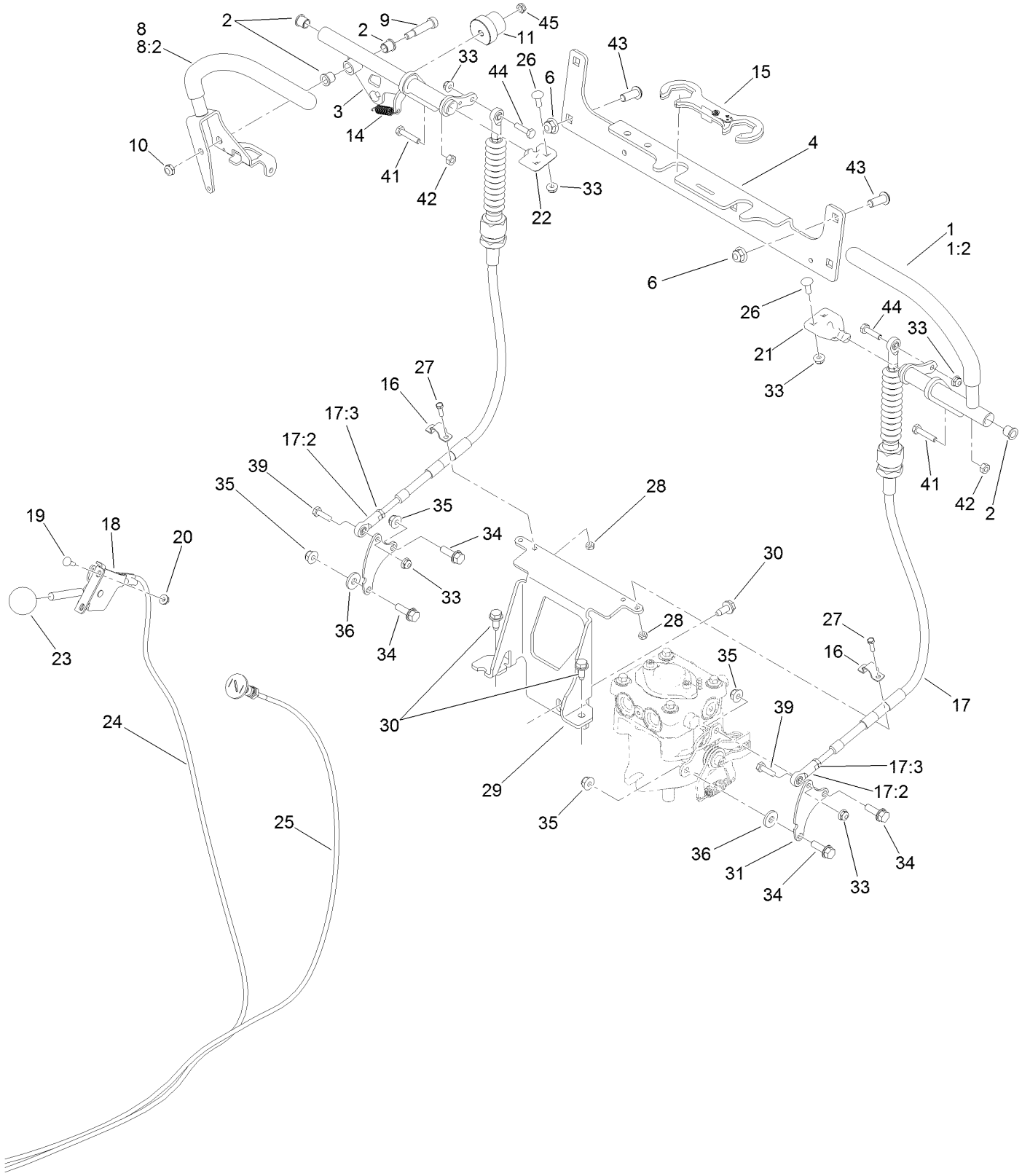

Control Assembly (continued)

Ref.	Part Number	Qty.	Description
1	121-7993	1	LH Lever ASM
1:2	119-0222	1	Grip
2	103-9928	4	Bearing
3	120-8391	1	Control-Motion, RH
4	119-7359-01	1	Bracket-Cross
6	104-8301	4	Nut-Flange, NI
8	120-8393	1	RH Lever ASM
8:2	119-0222	1	Grip
9	114-0239	1	Screw-HSH
10	3296-47	1	Nut-Lock, NI
11	126-1499	1	Cam
14	114-0249	1	Spring-Extension
15	120-8372	1	Lock-Cable
16	119-7370	2	Clamp
17	119-7366	2	Cable ASM
17:2	119-7379	2	Rod End-Ball Joint
17:3	3220-1	3	Nut-Jam
18	110-5547	1	Lever-Control
19	1-807533	2	Bolt-CARR
20	32128-17	2	Nut-Lock, Flange
21	120-3288	1	Tab-Pivot, LH
22	120-3287	1	Tab-Pivot, RH
23	1-603175	1	Knob-Ball
24	119-6654	1	Cable-Throttle
25	119-6655	1	Control-Choke, Push/Pull
26	3229-1	4	Bolt-CARR
27	3290-134	4	Screw
28	3296-2	4	Nut-Lock, NI
29	119-8746-01	1	Bracket-Mount, Cable
30	32144-70	3	Screw-HWHTF
31	121-5967	2	Plate-Control, Pump
33	104-7201	8	Nut-Flange, NI
34	3234-29	4	Screw-HHF
35	104-8300	4	Nut-Flange, NI
36	4-2390	2	Washer-Flat
39	321-5	2	Screw-HH
41	114-0282	2	Screw-HH
42	3217-5	2	Nut-Hex
43	3274-94	4	Screw-HSBH
44	321-6	2	Screw-HH
45	3296-56	1	Nut-Lock, NI

Engine Assembly

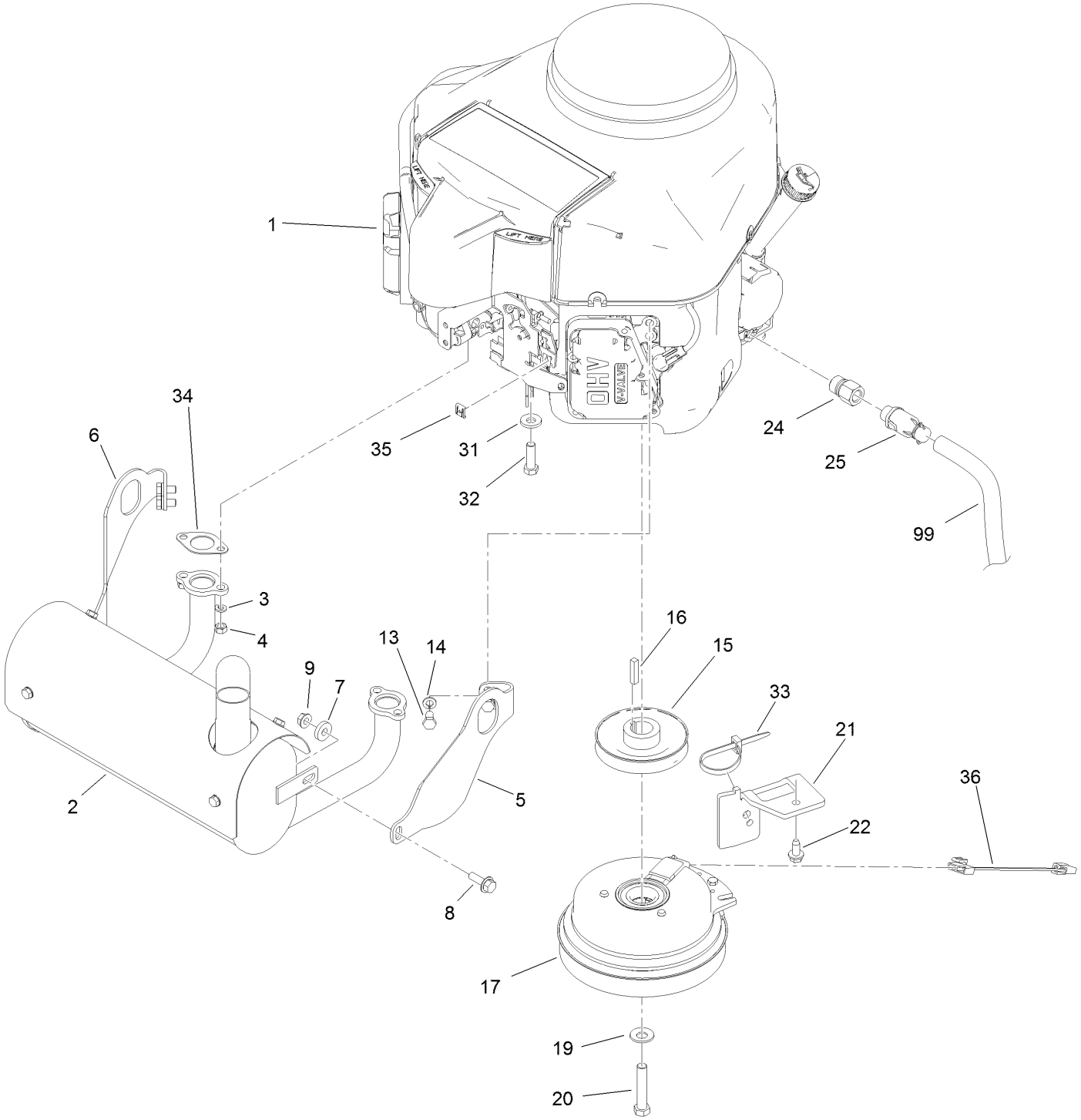

Engine Assembly (continued)

Ref.	Part Number	Qty.	Description
1		1	Engine-Kawasaki, Fs600V ●■
2	116-2351	1	Muffler
3	114-3550	4	Washer-Lock, Spring
4	114-3549	4	Nut
5	116-2353	1	Bracket-Muffler Mount, LH
6	116-2354	1	Bracket-Muffler Mount, RH
7	104-7658	2	Spacer
8	3234-29	2	Screw-HHF
9	32128-25	2	Nut-HF
13	33114-016	4	Screw-HH
14	3253-4	4	Washer-Lock
15	116-3610	1	Pulley
16	1-807259	1	Key
17	130-1849	1	Clutch
19	1-603610	1	Washer-Spring
20	3212-9	1	Screw-HH
21	116-3811-01	1	Bracket-Anchor, Clutch
22	32144-70	1	Screw-HWHTF
24	103-1966	1	Adapter
25	120-4321	1	Valve-Drain, Oil
31	98-5975	4	Washer-Belleville
32	323-7	4	Screw-HH
33	3290-378	1	Tie-Cable
34	1-653313	2	Gasket-Exhaust
35	81-1690	1	Clamp-Cable
36	130-6566	1	Harness-Wire
99	103-1964	1	Hose-Drain, Oil

● Not serviced separately

■ Obtain parts from www.kawpowerepc.com

Fuel Tank Assembly

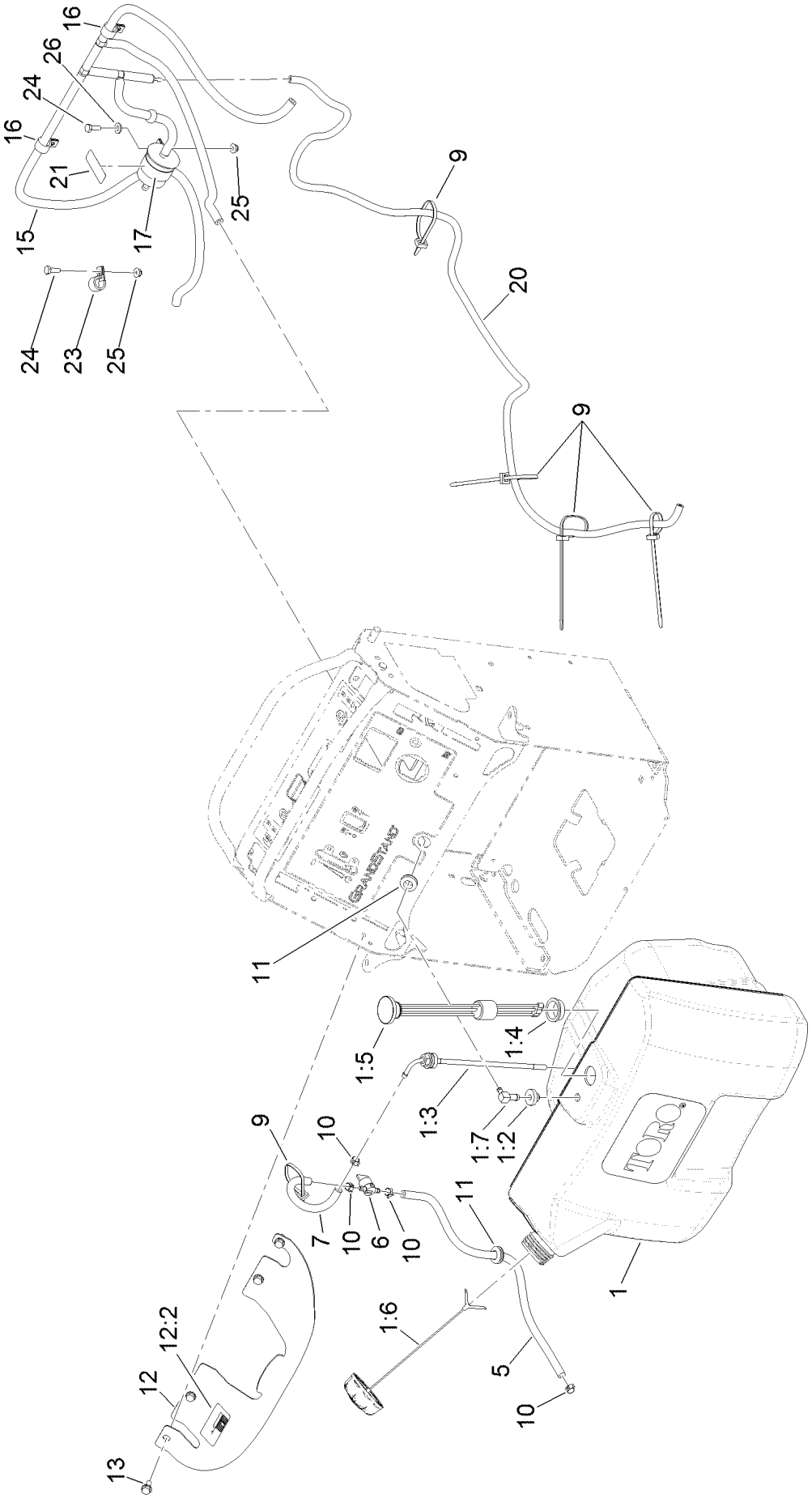

Fuel Tank Assembly (continued)

Ref.	Part Number	Qty.	Description
1	119-7340	1	Tank ASM
1:2	46-6560	3	Bushing
1:3	1-643172	3	Elbow-90 DEG
1:4	95-8972	1	Grommet
1:5	117-9719	1	Guage-Fuel
1:6	126-1789	1	Cap-Fuel, Ratcheting
1:7	116-3408	1	Fitting-Fuel, Bulkhead
5	110-5701	1	Hose-Fuel
6	1-603770	1	Valve-Fuel
7	109-0297	1	Hose-Fuel
9	3290-378	5	Tie-Cable
10	2412-98	4	Clamp-Hose
11	112-7069	2	Grommet
12	120-6462	1	Bracket-Tank
12:2	116-3290	1	Decal-Fill, Fuel
13	32144-70	4	Screw-HWHTF
15		1	Vent Hose ASM ●
16	2412-87	2	Clamp-Cable
17	2412-96	1	Clamp-R
20	110-4102	1	Hose-Fuel
21	116-4769	1	Decal-Filter, Emissions
23	2412-87	1	Clamp-Cable
24	321-4	2	Screw-HH
25	104-7201	2	Nut-Flange, NI
26	3256-22	1	Washer-Flat

● Not serviced separately

Vent Hose Assembly

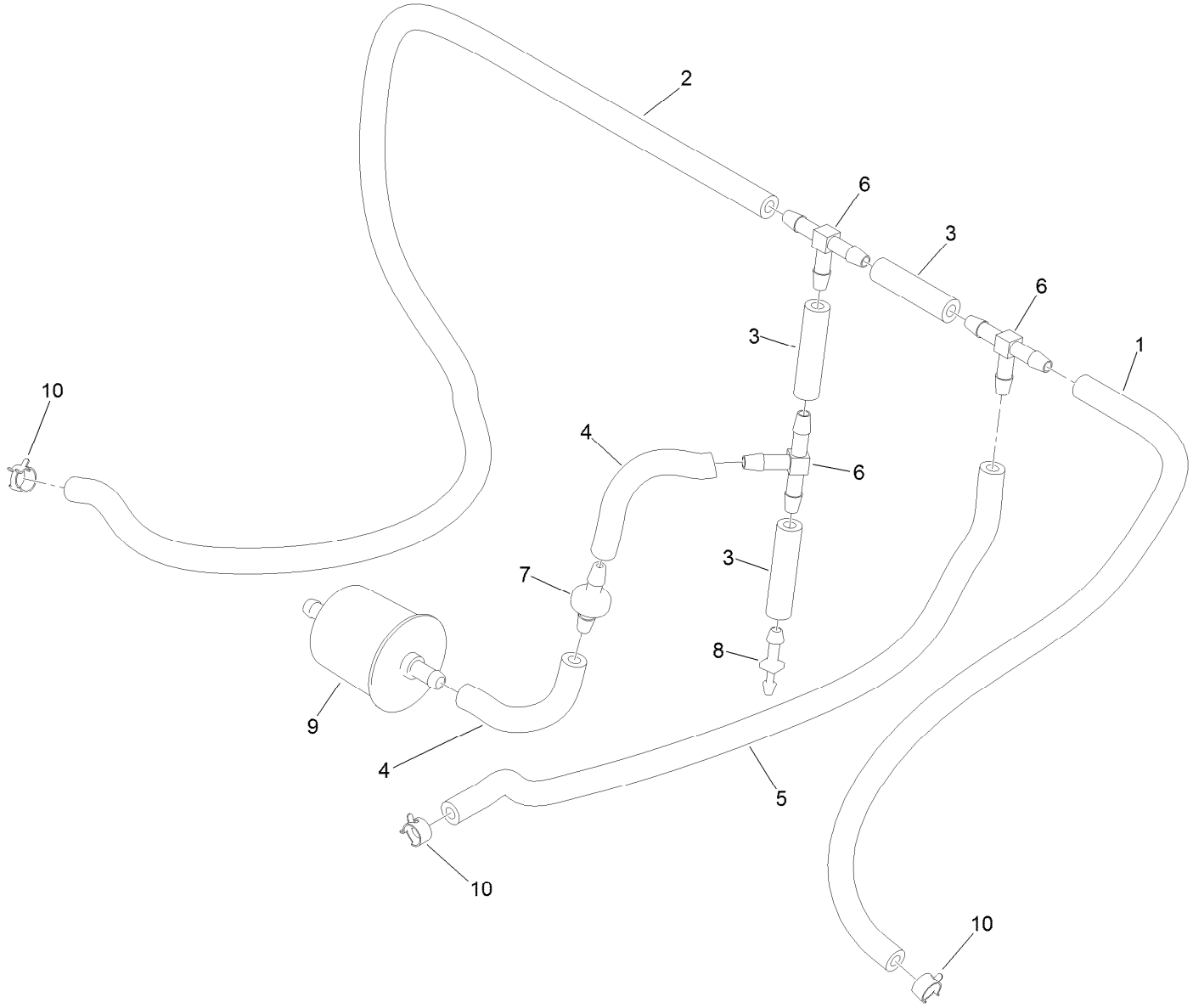

Vent Hose Assembly (continued)

Ref.	Part Number	Qty.	Description
1	110-5701	1	Hose-Fuel
2	110-5702	1	Hose-Fuel
3	99-9415	3	Hose-Fuel
4	109-0650	2	Hose-Fuel
5	109-0296	1	Hose-Fuel
6	99-5005	3	Fitting-Tee, Barbed
7	99-5000	1	Valve-Check, Fuel
8	106-8150	1	Fitting-Straight
9	120-2235	1	Filter-Fuel
10	2412-98	3	Clamp-Hose

Electrical Assembly

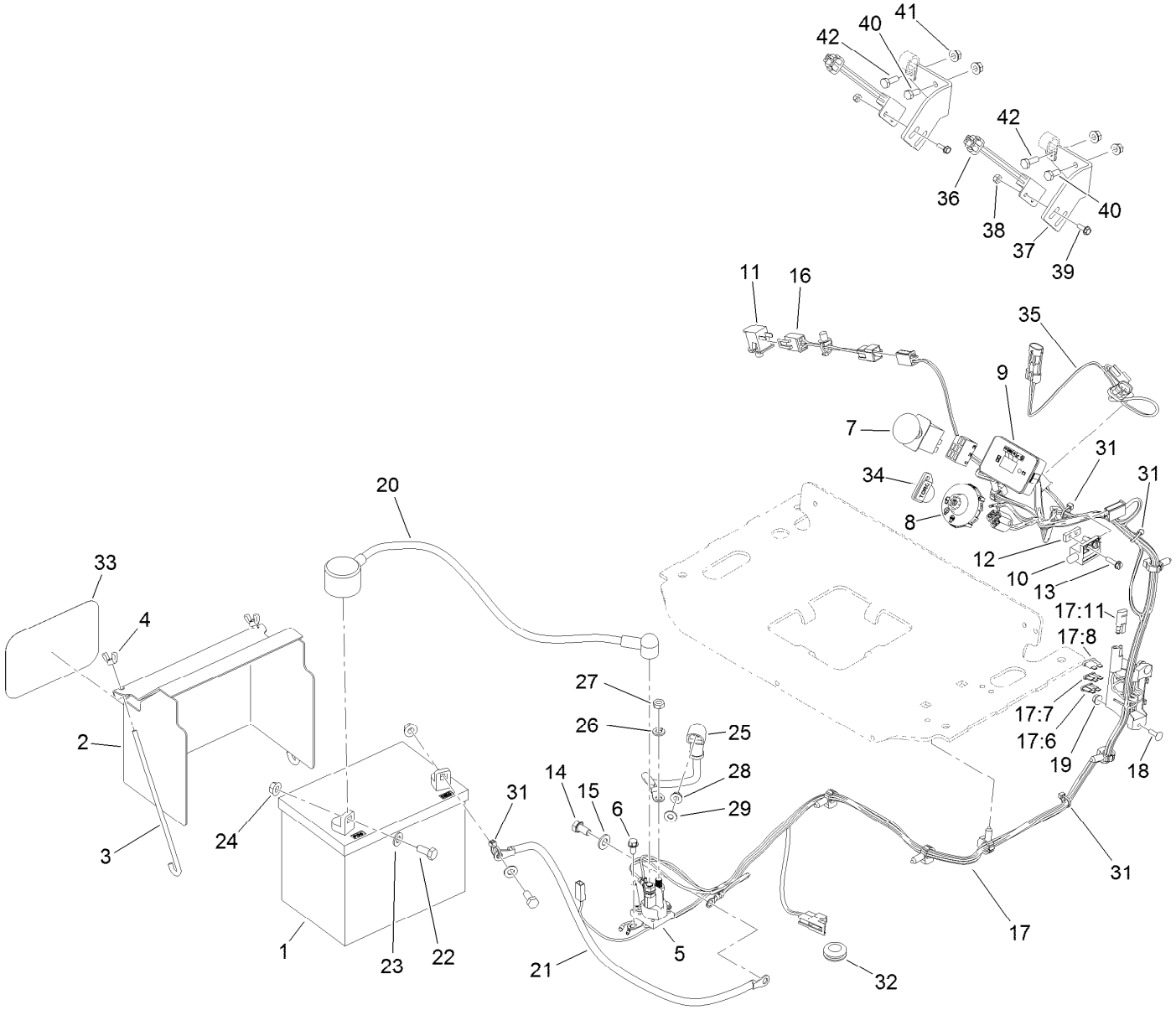

Electrical Assembly (continued)

Ref.	Part Number	Qty.	Description
1	104-8162	1	Battery-Dry
2	117-0543-01	1	Cover-Battery
3	1-633651	2	Bolt-Holddown
4	1-543792	2	Wingnut
5	117-1197	1	Solenoid
6	32144-4	2	Screw-HWH
7	114-0279	1	Switch-PTO
8	117-2222	1	Switch-Ignition
9	117-3886	1	Module-Hour Meter
10	1-513152	1	Switch-Closed, Normally
11	82-2190	1	Switch-Bail
12	1-633181	1	Plate-Tapped
13	32105-13	2	Screw-HWH
14	33114-016	1	Screw-HH
15	33094-00	1	Washer-Plain
16	130-1779	1	Harness-Wire, Jumper (Opc)
17	116-2662	1	Harness-Wiring
17:6	109103	1	Fuse-Blade, 30 Amp
17:7	109102	1	Fuse-Blade, 25 Amp
17:8	218-578	1	Fuse-Blade, 10 Amp
17:11	116-0053	1	Cap-Plug
18	1-807533	2	Bolt-CARR
19	3290-148	2	Nut-HF
20	115-3864	1	Cable-Battery, Positive
21	105-0836	1	Cable-Battery, Black
22	322-3	2	Screw-HH
23	3256-23	2	Washer-Flat
24	109-5715	2	Nut-HHF, Smooth
25	106-8268	1	Cable-Battery, Red
26	3253-4	2	Washer-Lock
27	3220-2	2	Nut-Jam
28	32128-33	1	Nut-HF
29	3256-22	1	Washer-Flat
31	1-303287	4	Tie-Cable
32	117-2781	1	Grommet
33	68-3640	1	Decal
34	63-8360	1	Key-Ignition
35	119-8729	1	Harness-Wire, Neutral Switch
36	105-0023	2	Switch-Proximity
37	119-8503-01	2	Bracket-Mount, Switch
38	3296-2	4	Nut-Lock, NI
39	32105-23	4	Screw
40	321-3	2	Screw-HH
41	32128-32	4	Nut-HHF
42	321-4	2	Screw-HH

Deck Assembly

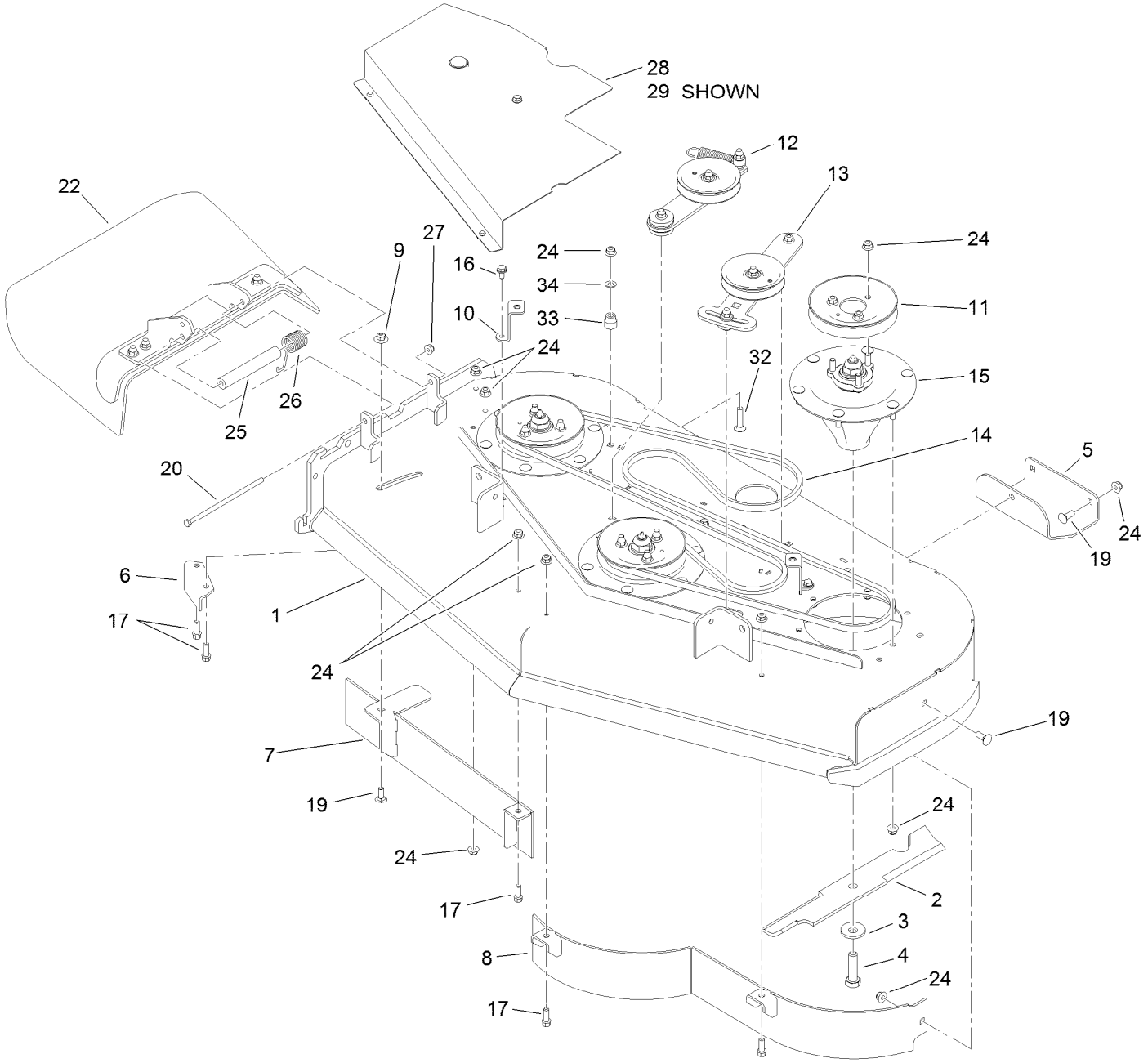

Deck Assembly (continued)

Ref.	Part Number	Qty.	Description
1	120-6403	1	Deck ASM
2	107-3192-03	3	Blade-16.5 Inch (High Flow)
3	103-0865	3	Washer-Blade Bolt, Heavy
4	51-4060	3	Screw-Blade
5	114-1908-01	1	Skid
6	107-8541-01	1	Baffle-Discharge
7	121-1790-01	1	Baffle
8	117-0410-01	1	48 Inch Baffle ASM
9	109-6658	1	Nut-Flange, NI
10	119-7272-01	2	Belt Cover Bracket ASM
11	120-6432	3	Pulley
12	120-6410	1	Idler Arm ASM
13	117-0446	1	Idler Adjust ASM
14	114-0453	1	Belt-V
15	119-8560	3	Spindle ASM
16	32144-70	2	Screw-HWHTF
17	92-1624	5	Screw-HWH
19	3231-2	5	Bolt-CARR
20	322-50	1	Screw-HH
22	120-2451	1	Deflector ASM
24	104-8301	37	Nut-Flange, NI
25	105-4622	1	Spacer
26	108-4052	1	Spring-Torsion
27	104-8300	1	Nut-Flange, NI
28	119-7268	1	LH Belt Cover ASM
29	119-7269	1	RH Belt Cover ASM
32	3231-5	1	Screw-CARR
33	1-603496	1	Bushing-Idler
34	3256-24	1	Washer-Flat

Deck Decal Assembly No. 120-6403

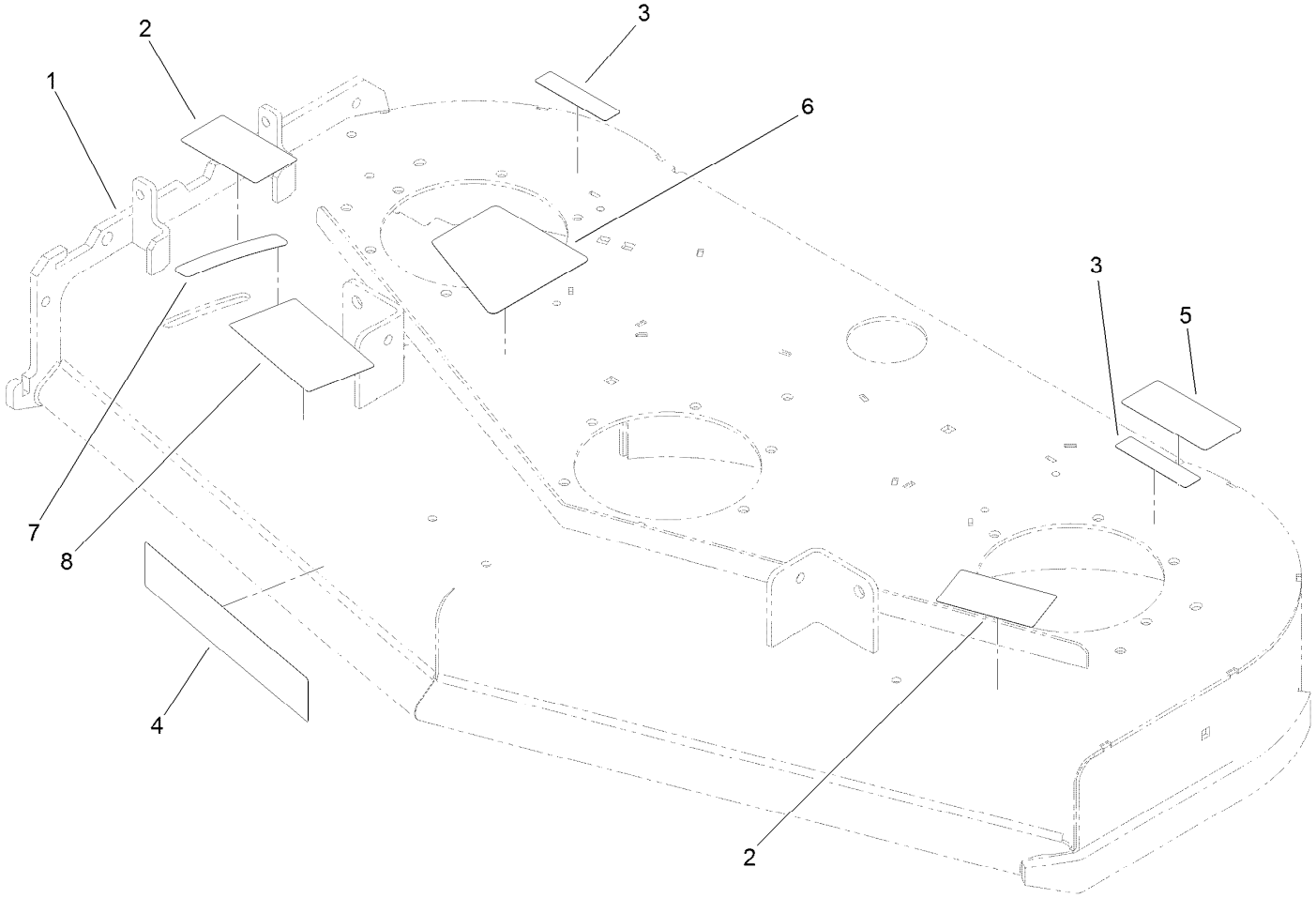

Deck Decal Assembly No. 120-6403 (continued)

Ref.	Part Number	Qty.	Description
1		1	Deck ASM ●
2	121-6049	2	Decal-Danger
3	119-0217	2	Decal-Danger
4	107-1690	1	Decal
5	93-7818	1	Decal-Torque, Blade Bolt
6	120-6412	1	Decal-Belt Tension, Ce
7	110-2067	1	Decal-Setting, Baffle
8	110-2068	1	Decal-Adjustment, Baffle

● Not serviced separately

Idler Arm Assembly No. 120-6410

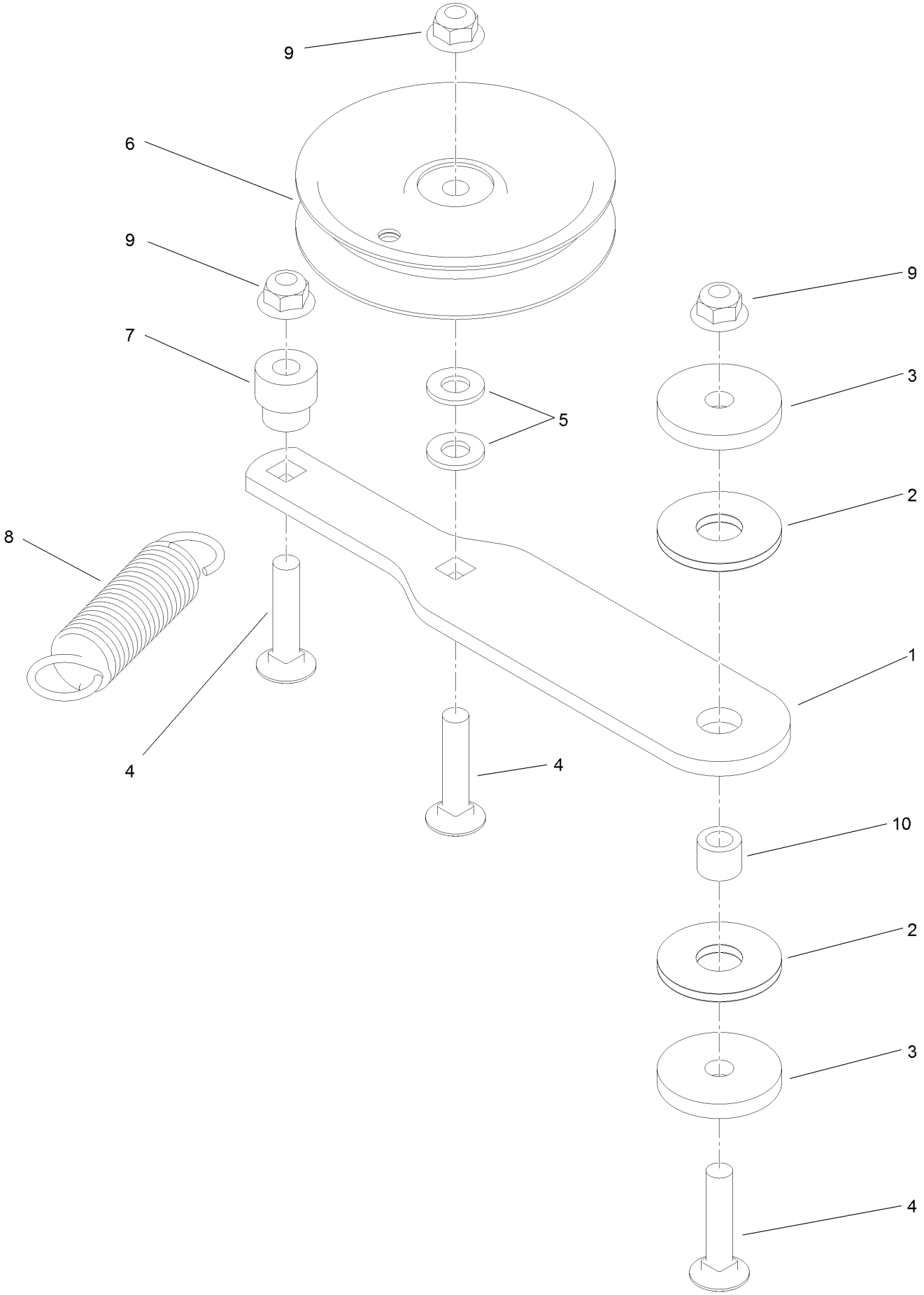

Idler Arm Assembly No. 120-6410 (continued)

Ref.	Part Number	Qty.	Description
1	120-6409	1	Arm-Idler
2	114-0463	2	Washer-Friction, Composite
3	110-9981	2	Washer-Plain
4	3231-5	3	Screw-CARR
5	3256-24	2	Washer-Flat
6	93-1622	1	Pulley-Idler
7	1-603496	1	Bushing-Idler
8	1-603402	1	Spring-Extension
9	104-8301	3	Nut-Flange, NI
10	1-413088	1	Bushing-Lever, Lift

Idler Adjust Assembly No. 117-0446

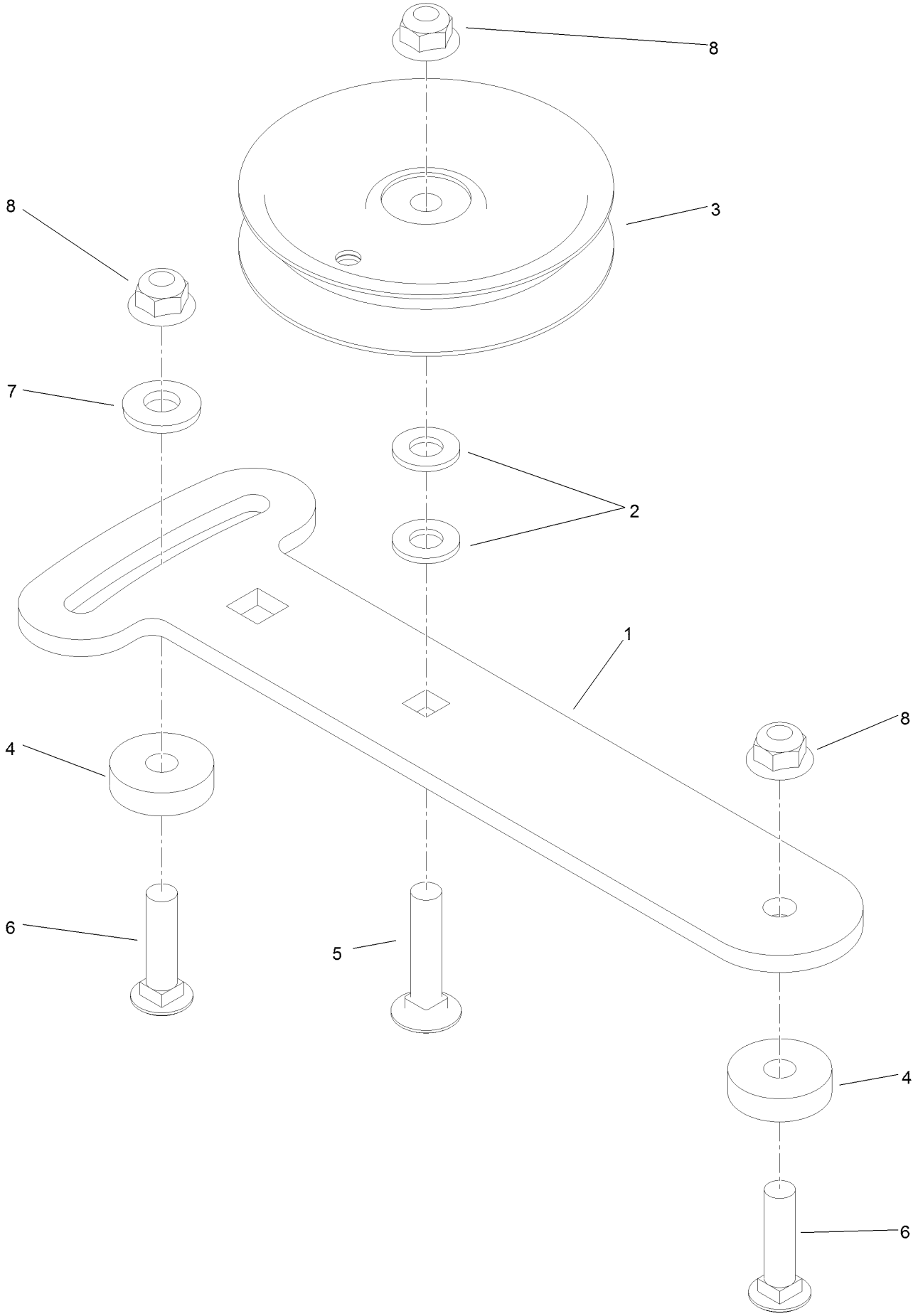

Idler Adjust Assembly No. 117-0446 (continued)

Ref.	Part Number	Qty.	Description
1	114-1991	1	Plate-Idler
2	3256-24	2	Washer-Flat
3	93-1622	1	Pulley-Idler
4	105-7788	2	Spacer
5	3231-5	1	Screw-CARR
6	3231-4	2	Screw-CARR
7	98-5975	1	Washer-Belleville
8	104-8301	3	Nut-Flange, NI

Spindle Assembly No. 119-8560

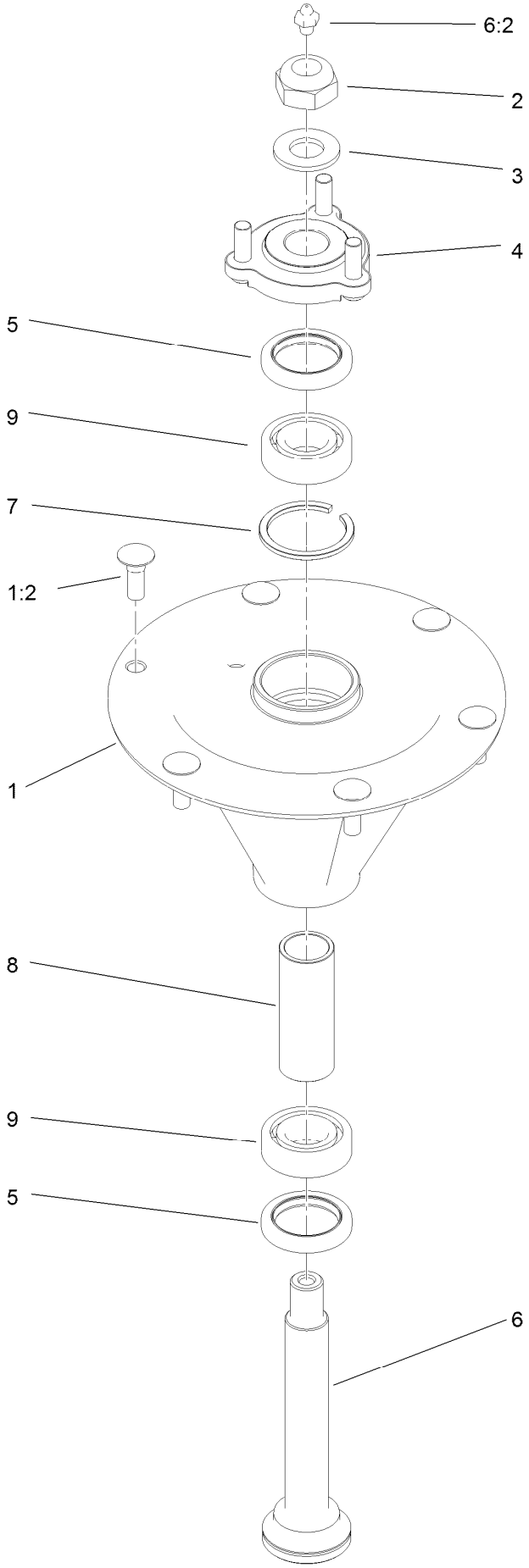

Spindle Assembly No. 119-8560 (continued)

Ref.	Part Number	Qty.	Description
1		1	Spindle Housing And Studs ASM ●
1:2	114-8195	6	Bolt-Ribbed Neck
2	3296-67	1	Nut-Lock, NI
3	92-5836	1	Washer
4	117-6172	1	Spindle Hub ASM
5	253-133	2	Seal-Oil
6	119-8527	1	Shaft-Spindle
6:2	302-2	1	Fitting-Grease
7	119-8532	1	Snap Ring
8	117-6184	1	Spacer
9	119-8558	2	Bearing-Noseal

● Not serviced separately

Deflector Assembly No. 120-2451

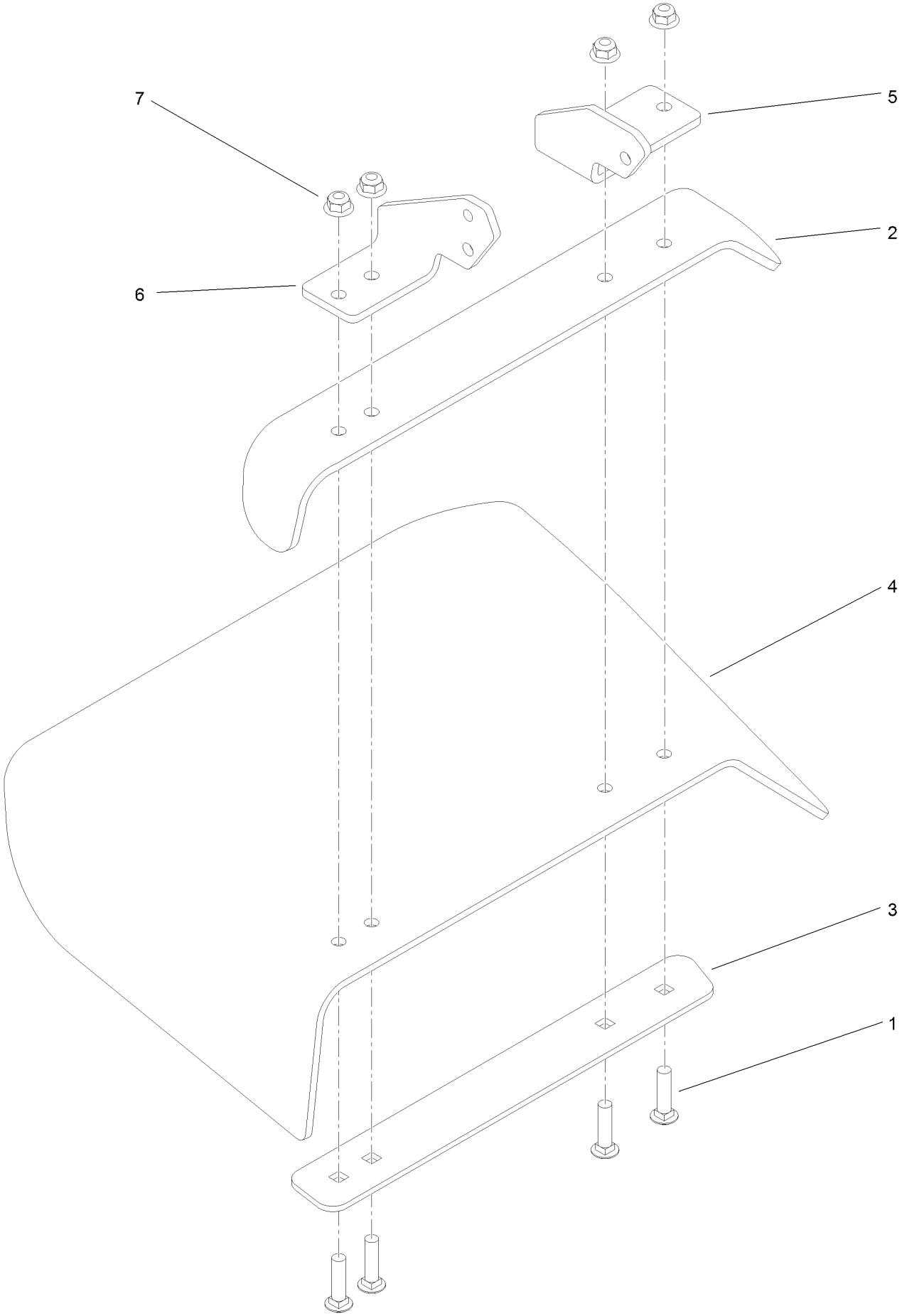

Deflector Assembly No. 120-2451 (continued)

Ref.	Part Number	Qty.	Description
1	3231-4	4	Screw-CARR
2	106-3246-01	1	Deflector
3	106-3248-03	1	Strap-Discharge
4	110-0759	1	Deflector-Rubber
5	108-4059-01	1	Plate-Hinge, Rear
6	106-3253-01	1	Plate-Hinge, Front
7	104-8301	4	Nut-Flange, NI

Attachments and Accessories

For 74568TE GrandStand Mower With 122cm TURBO FORCE Cutting Unit

Product Name	Model/Part
Blade-Hi Flow, 16.5in	107-3192-03
Blade-Low Flow, 16.5in	107-3193-03
Blade-Mid Flow, 16.5in	107-3194-03
Blade-Atomic, 16.5in	107-3195-03
Blade-Recycling, 16.5in	107-3196-03
Bagging Enhancement Kit	108-4091
Blade-Hi Flow, 16.5in (6 Pack)	110-0414
Blade-Lo Flow, 16.5in (6 Pack)	110-0415
Blade-Recycler, 16.5in (6 Pack)	110-0416
Blade-Atomic, 16.5in (6 Pack)	110-0417
Blade-Mid Flow, 16.5in (6 Pack)	110-0418
Weight-Cast	112-7059-01
Light Kit	114-3505
Hypr-Oil 500 (quart)	114-4713
Hypr-Oil 500 (gallon)	114-4714
Hypr-Oil 500-5 (5 gallon)	114-4715
Recycler Kit	115-7466
Weight Kit	117-3620
Chute Gate Kit With Bag	119-7292
Speed Control Kit	119-7390
Trash Bag Kit	121-7530
Roller Striper Kit	131-1470
Soft Bag (3 Bushel)	30104
Spark Arrestor	98-9099

Notes:

TORO®

Count on it.