Form No. 3397-700 Rev A

Console Kit

Greensmaster® 3320 or 3420 Series TriFlex® Traction Unit

Model No. 132-9543

Installation Instructions

Safety

Safety and Instructional Decals

Safety decals and instructions are easily visible to the operator and are located near any area of potential danger. Replace any decal that is damaged or lost.

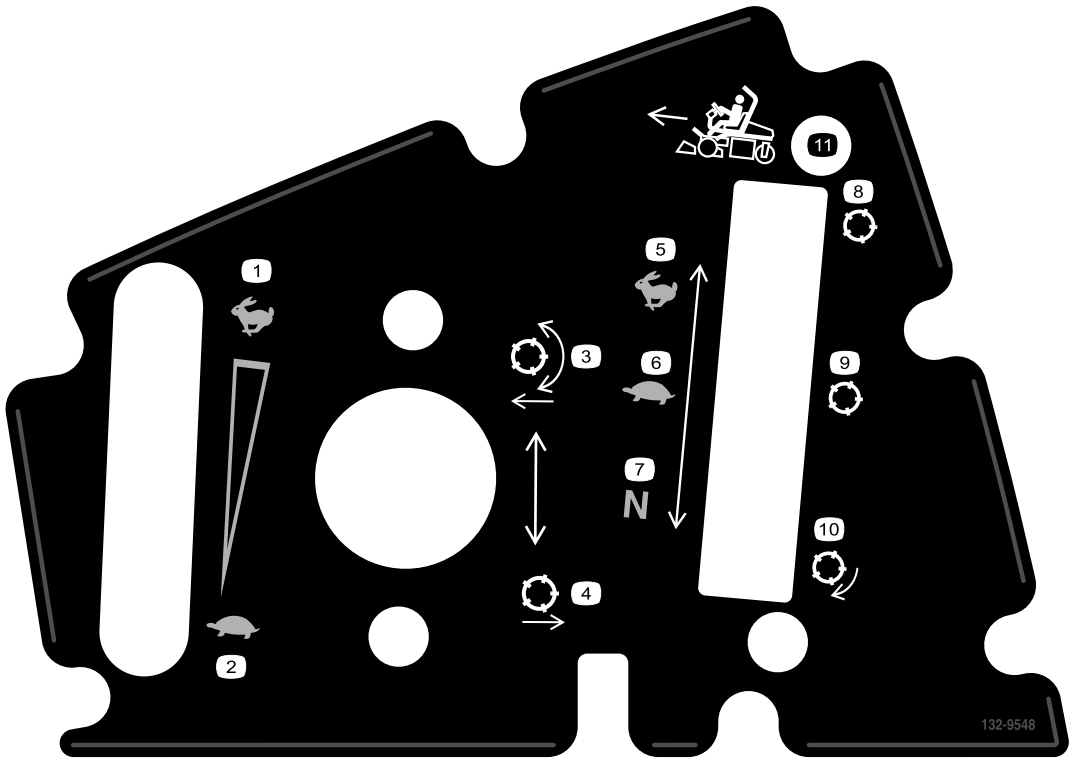

132-9548

1. Engine speed (high)
2. Engine speed (low)
3. Lower and engage the reels
4. Raise and disengage the reels
5. Traction unit (transport)
6. Traction unit (mow)
7. Traction unit (neutral)
8. Reel (transport)
9. Reel (mow)
10. Reel (backlaping)
11. Move forward

© 2016—The Toro® Company
8111 Lyndale Avenue South
Bloomington, MN 55420

Register at www.Toro.com.

CE

Original Instructions (EN)
Printed in the USA
All Rights Reserved

3397-700 A

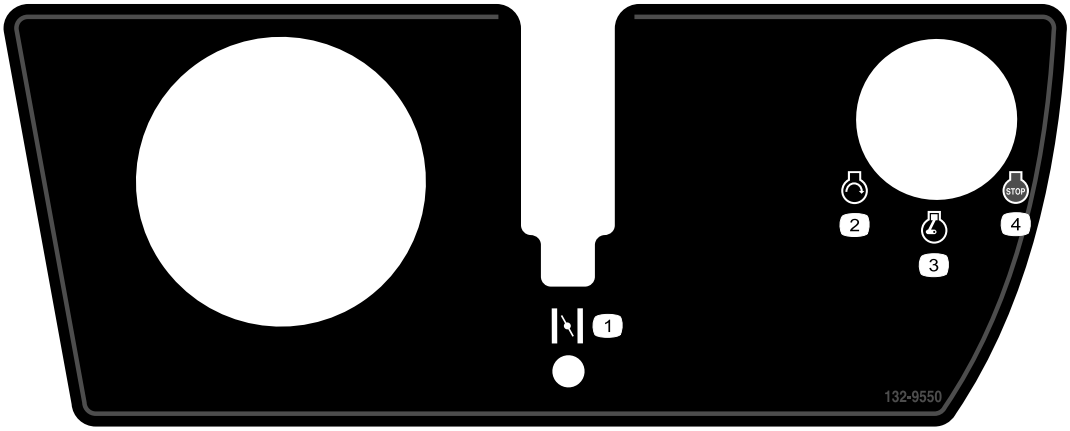

132-9550

1. Choke
2. Engine (start)
3. Engine (run)
4. Engine (stop)

Installation

Loose Parts

Use the chart below to verify that all parts have been shipped.

Description	Qty.	Use
No parts required	–	Prepare the machine.
No parts required	–	Remove the console.
Console Assembly Speed nut Thread clip (1/4 inch) Choke-lever assembly Function-control bracket Bolt (#10 x 1/2 inch) Bolt (1/4 x 5/8 inch) Neutral-lock cable Locknut (#10) Upper decal Lower decal Slot cover Bolt (#10 x 3/8 inch) Slotted bolt (#10 x 3/8 inch)	1 4 2 1 1 4 2 1 2 1 1 1 1 2	Install the kit.
No parts required	–	Complete the install.

Preparing the Machine

1. Move the machine to a level workspace.
2. Shut off the engine, set the parking brake, and remove the key from the ignition switch.
3. Disconnect the battery; Refer to the *Operator's Manual*.

Removing the Console

Removing the Console Cover

Note: Set aside all of the items that you remove from this procedure.

Remove the 8 bolts that secure the console cover to the console assembly ().

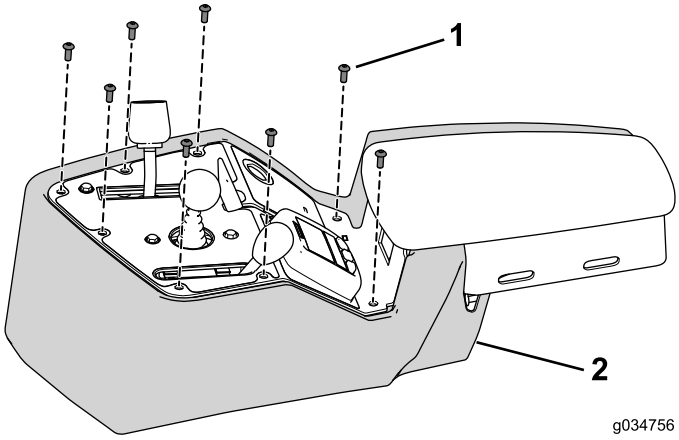

Figure 1

1. Bolt
2. Cover

Disconnect the Wire Harness

Disconnect the wire harness from the controls, switches, and indicators mounted on the console assembly (Figure 2).

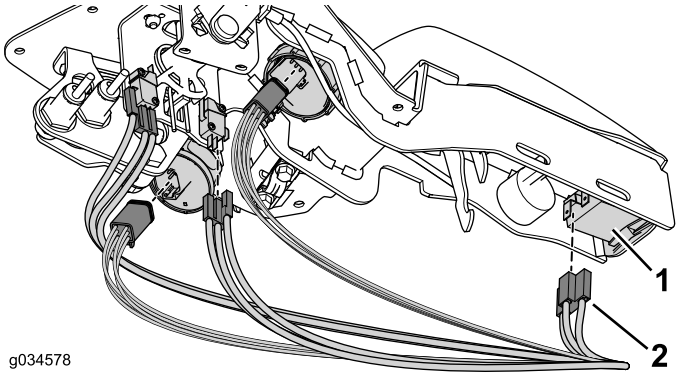

Figure 2

1. Control, indicator, or switch
2. Connector

Note: It is not necessary to disconnect the proximity sensors or audio alarm.

Removing the Throttle Assembly

Note: Set aside all of the items that you remove from this procedure.

1. Remove the knob from the throttle-lever shaft.
2. Remove and discard the 2 bolts and locknuts that secure the throttle assembly to the console assembly (Figure 3).

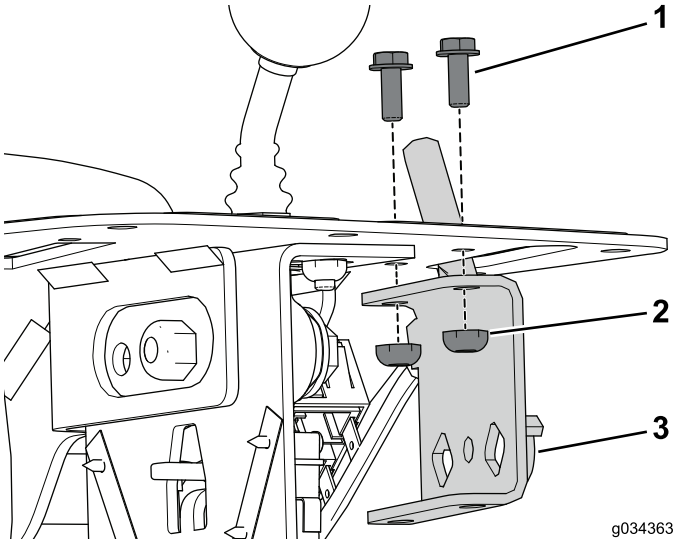

Figure 3

1. Bolt
2. Locknut
3. Throttle assembly

Note: Do not disconnect the throttle cable from the engine.

Removing the Mow-Control Assembly

1. Remove and set aside the knob from the mow-control shaft (Figure 4).

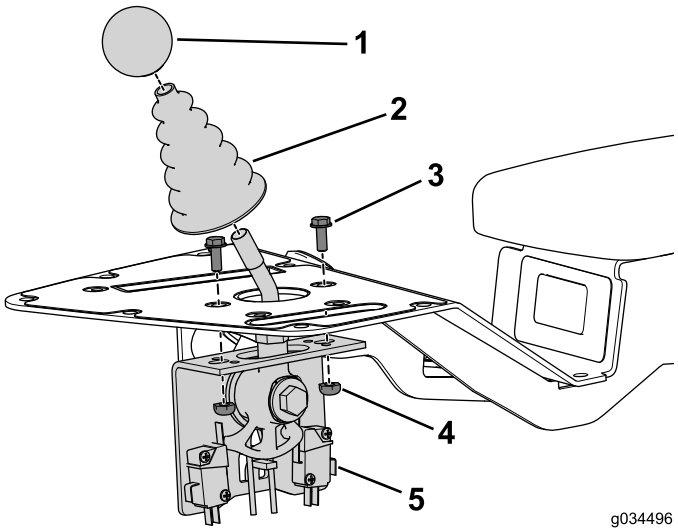

Figure 4

1. Knob
2. Dust boot
3. Bolt
4. Nut
5. Mow-control assembly

2. Remove and set aside the dust boot from the mow-control shaft (Figure 4).
3. Remove and set aside the 2 bolts and nuts securing mow-control assembly to the console assembly (Figure 4).

Removing the Function-Control Assembly

Note: Set aside all of the items that you remove in the following procedure unless otherwise instructed.

1. Remove the 2 bolts and nut clip securing cable clamp and shim to the console assembly (Figure 5).

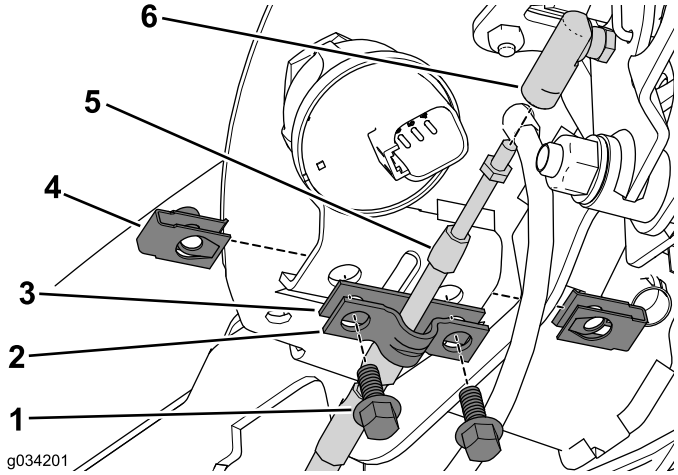

Figure 5

1. Bolt
2. Cable clamp
3. Shim
4. Nut clip
5. Neutral-lock cable
6. Cable connector

2. Set aside the cable clamp and discard the shim (Figure 5).
3. Disconnect the neutral-lock cable from the cable connector (Figure 5).
4. Disconnect the neutral-lock cable from the ball-joint connector on the traction-rod assembly (Figure 6).

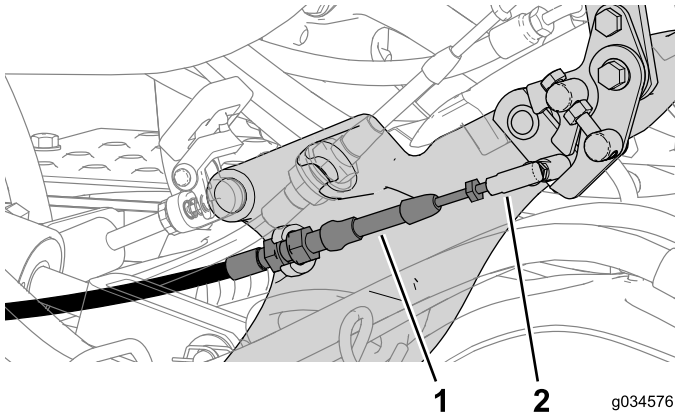

Figure 6

1. Neutral-lock cable
2. Ball-joint connector

5. Remove the nuts securing the proximity sensors to the function-lever bracket (Figure 7).

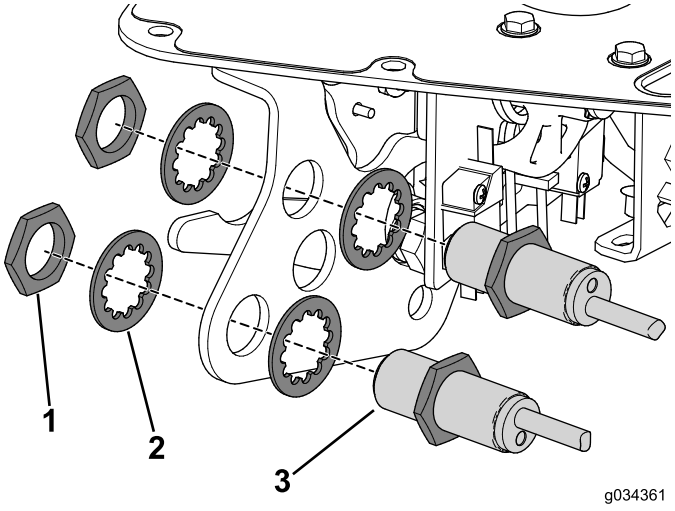

Figure 7

1. Retaining nut
2. Washer
3. Proximity sensor

6. Remove the knob from the function lever (Figure 8).

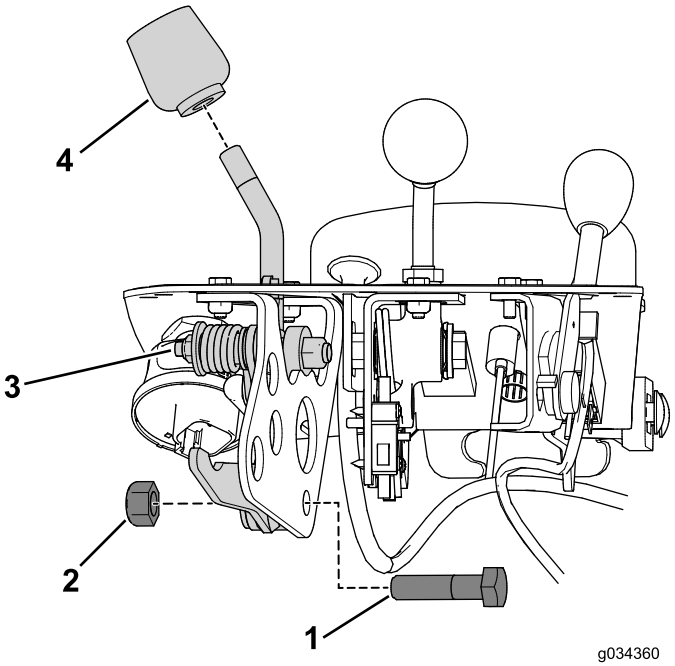

Figure 8

1. Bolt
2. Nut
3. Function-lever assembly
4. Knob

7. Remove the bolt and nut that secures the function-lever assembly to the function-lever bracket (Figure 8).
8. Remove and discard the 2 bolts and nuts that secure the function-control bracket to the console assembly (Figure 9).

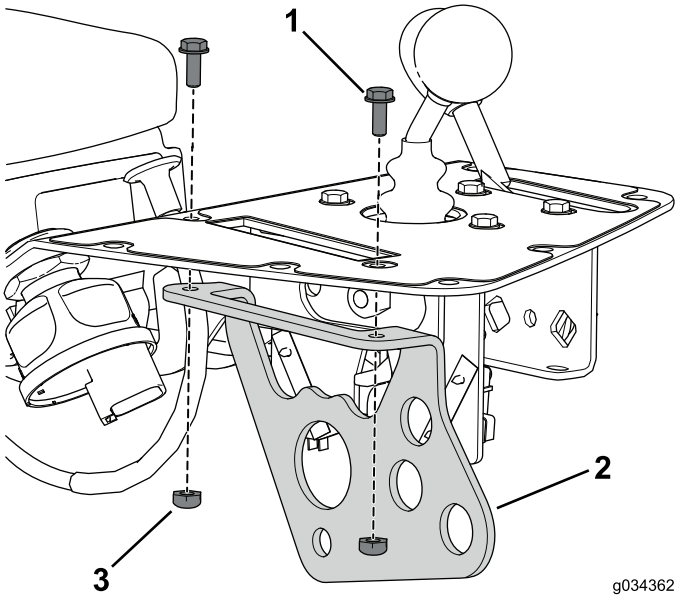

Figure 9

1. Bolt
2. Function-control assembly
3. Nut

Disconnecting the Choke Cable

1. Disconnect the cable from the choke control on the engine.
2. Remove the cable from the traction unit.
3. Leave the cable connected to console assembly, it will be removed with the console assembly.

Note: Replace but do not completely tighten the cable ties when you remove the choke cable. This will also help you when routing the new cable.

Removing the Switches and Indicators

Note: Set aside all of the items that you remove from this procedure.

1. Remove the retaining ring to remove the display from the console assembly (Figure 10).

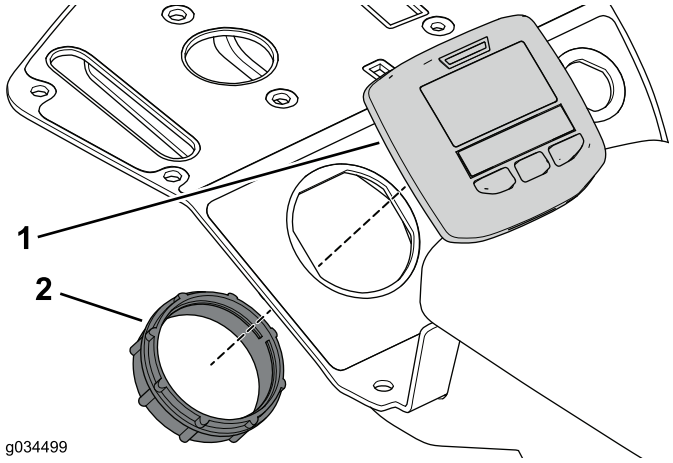

Figure 10

1. Display
2. Retaining ring

2. Remove the knurled-retaining ring on the alarm and remove it from the console assembly (Figure 11).

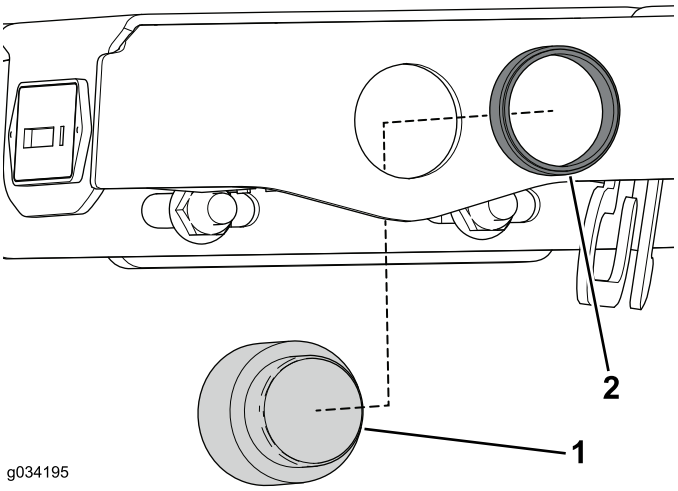

Figure 11

1. Audio alarm
2. Retaining ring

3. Remove the retainer that secures the hour meter from the console assembly, if equipped (Figure 12).

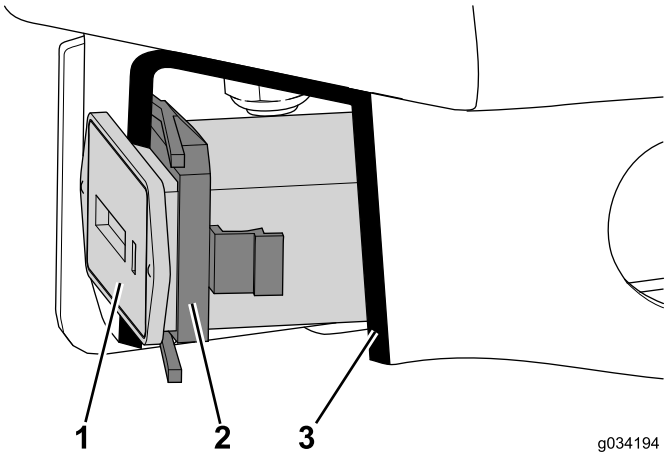

Figure 12
Cutaway View

1. Hour meter
2. Retainer
3. Cutaway

4. Remove the retaining nut on the ignition switch to remove it from the console assembly (Figure 13).

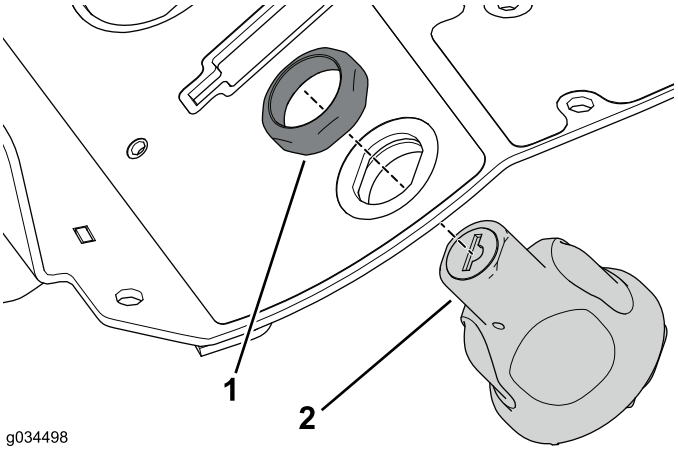

Figure 13

1. Retaining nut
2. Start switch

Removing the Console Assembly

Set aside all of the items that you remove from this procedure.

1. Remove the 2 carriage bolts and flange nuts that secure the console assembly to the console bracket (Figure 14).

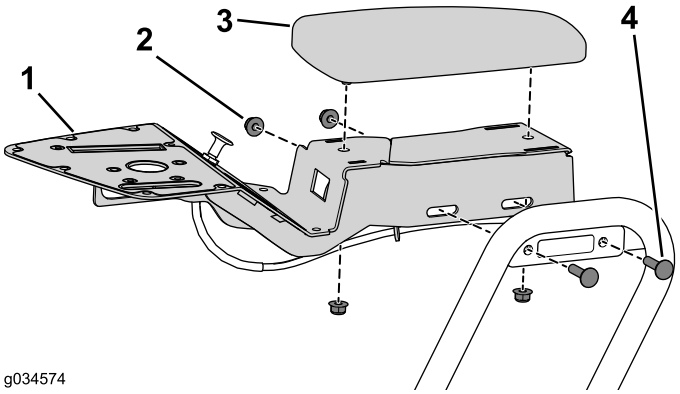

Figure 14

1. Console assembly
2. Flange nut
3. Arm rest
4. Carriage bolt

Note: Diesel powered machines have a spacer between the console assembly and bracket.

2. Remove 2 flange nuts securing the armrest from the console assembly (Figure 14).

Installing the Kit

Installing the Console Assembly

1. Install the upper and lower decal to the console assembly (Figure 15).

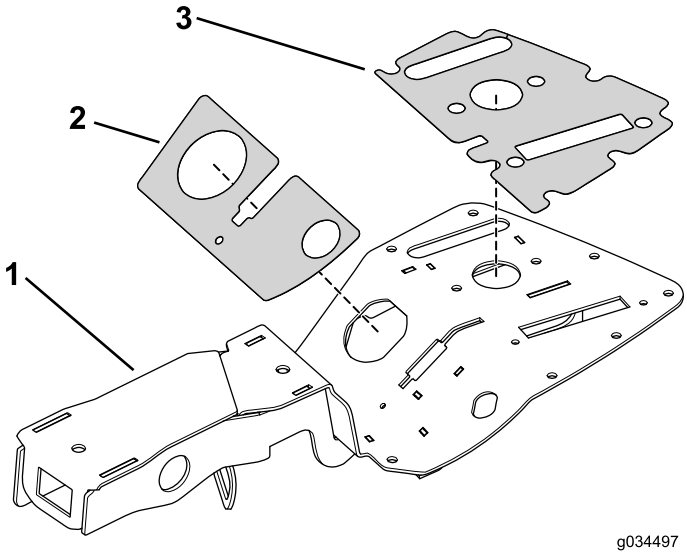

Figure 15

1. Console assembly
2. Lower decal
3. Upper decal

2. Use the 2 carriage bolts and flange nuts that you removed earlier to secure the console bracket (Figure 16).

Note: Install the spacer on machines that are diesel powered.

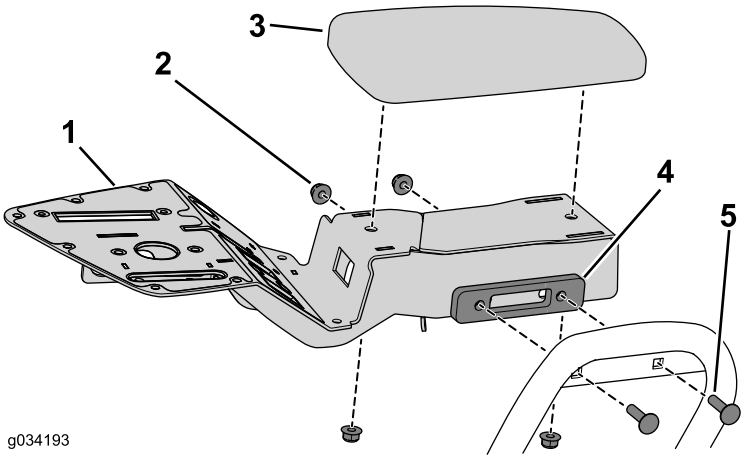

Figure 16

1. Console assembly
2. Flange nut
3. Arm rest
4. Spacer (diesel only)
5. Carriage bolt

3. Use the 2 flange nuts you removed earlier to secure the armrest to the console assembly (Figure 16).

Installing the Mow-Control Assembly

1. Use the 2 bolts (#10 x 1/2 inch) and locknuts to secure the joystick assembly to the console (Figure 17).

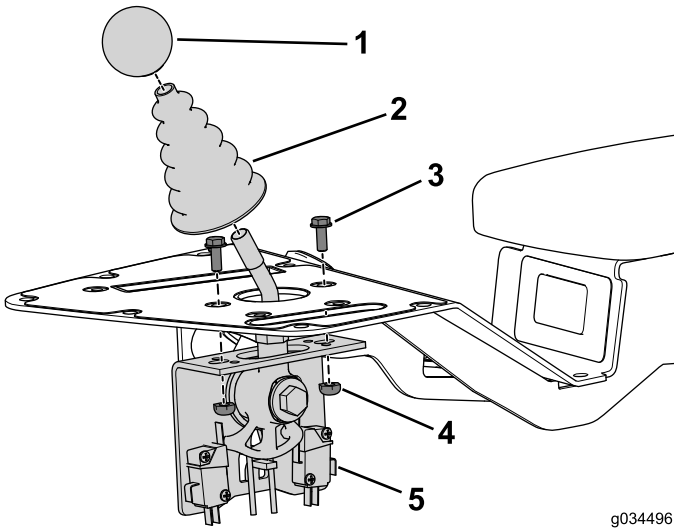

Figure 17

1. Knob
2. Dust boot
3. Bolt
4. Nut
5. Mow-control assembly

2. Install the dust boot over the joystick shaft.
3. Install the knob to the joystick shaft.

Installing the Choke Assembly

Gas Engine Only

1. Follow the original cable routing to route the new choke cable and secure it to the machine with cable ties (Figure 18).

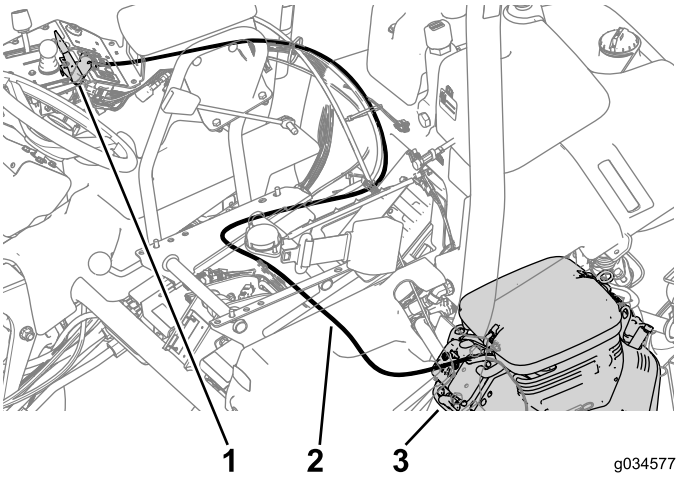

Figure 18

1. Choke-lever assembly
2. Choke cable
3. Choke control

2. Connect the cable to the choke control on the engine (Figure 18).
3. Install the speed nuts onto the mount on the console assembly (Figure 19).
4. Use the 2 bolts (#10 x 1/2 inch) to secure the choke-lever assembly to the console (Figure 19).

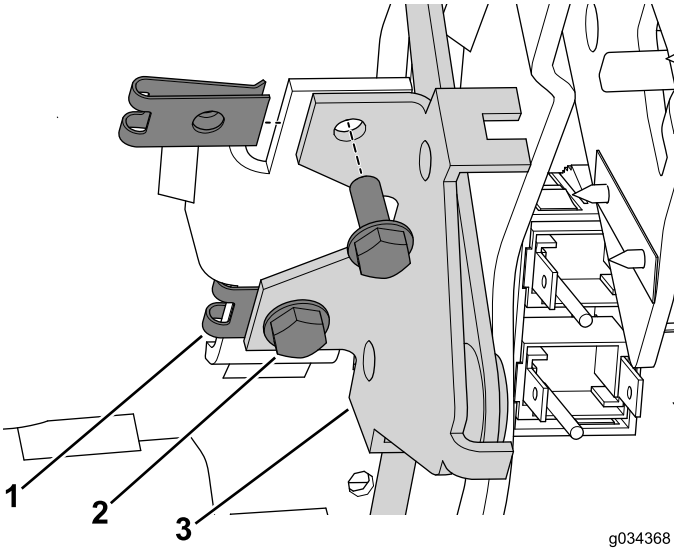

Figure 19

1. Speed nut (installed)
2. Bolts (#10 x 1/2 inch)
3. Choke-lever assembly

Installing the Slot Cover

Diesel Engine Only

Use the bolt (#10 x 3/8 inch) to secure the slot cover to the console (Figure 20).

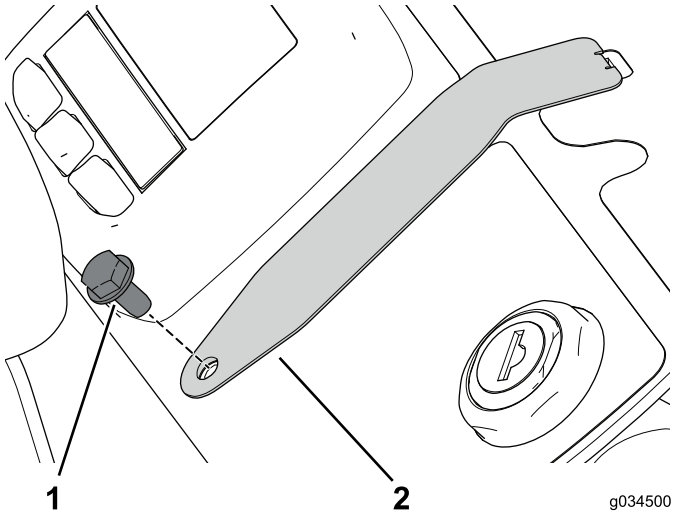

Figure 20

1. Bolt (#10 x 3/8 inch)
2. Slot cover

Installing the Function-Control Assembly

1. Use the bolt (#10 x 1/2 inch) and locknut to secure the function-lever bracket to the console (Figure 21).

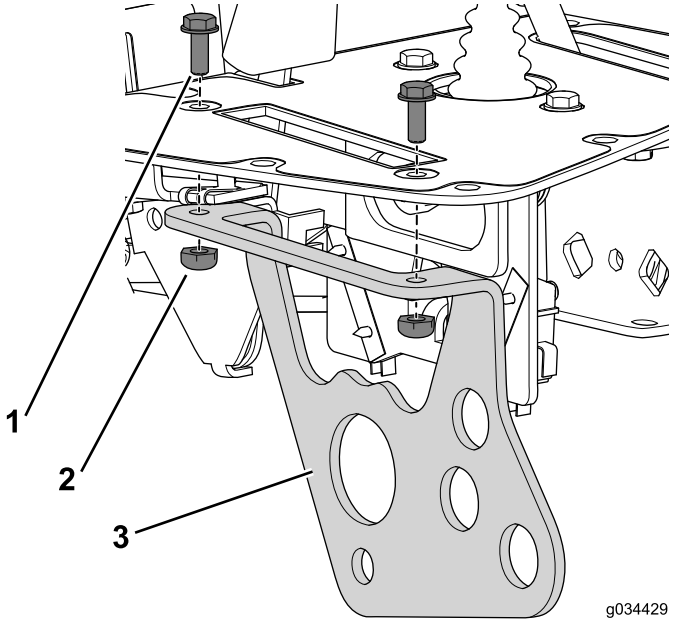

Figure 21

1. Bolt (#10 x 1/2 inch)
2. Locknut
3. Function-lever bracket

2. Use the locknut, flat washer, spacer tube, and bolt that you removed earlier to secure the handle assembly to the bracket (Figure 22).

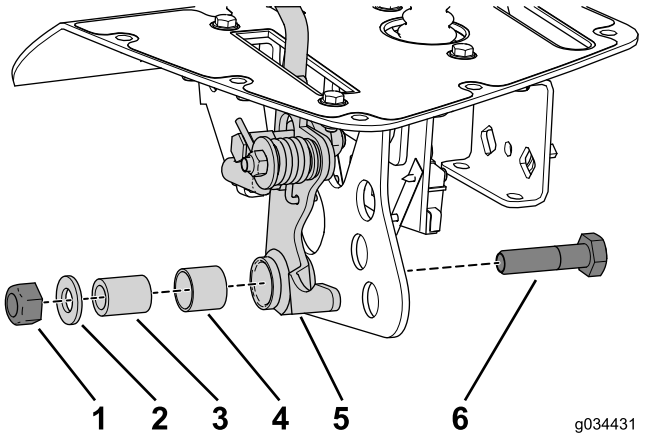

Figure 22

1. Locknut (10 mm)
2. Flat washer
3. Spacer tube
4. Split bushing
5. Lever assembly
6. Bolt (10 mm x 40 mm)

3. Use the nuts and lock washers that you removed earlier to secure the proximity sensors to the function-lever bracket (Figure 23).

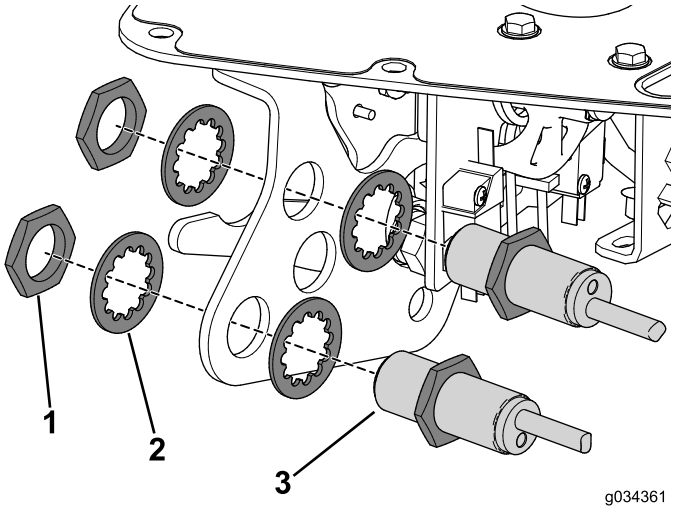

Figure 23

1. Nut
2. Lock washer
3. Proximity sensor

4. Install the knob to the function-lever shaft.

Installing the Neutral-Lock Cable

1. Remove the original cable and route the new cable in its place.
2. Connect the neutral-lock cable to the pedal shifter (Figure 24).

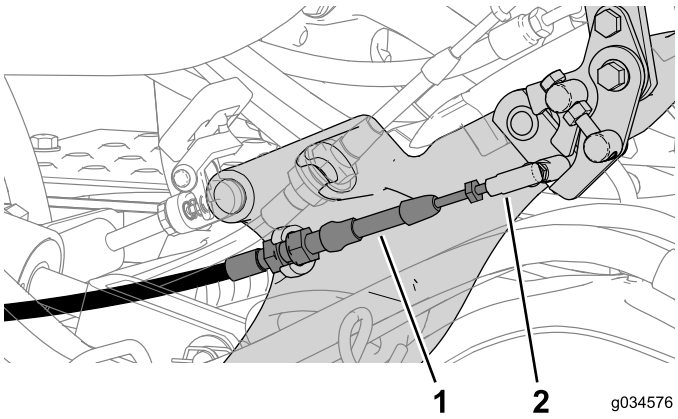

Figure 24

1. Neutral-lock cable
2. Ball-joint connector

3. Connect the neutral-lock cable to the cable connector (Figure 25).

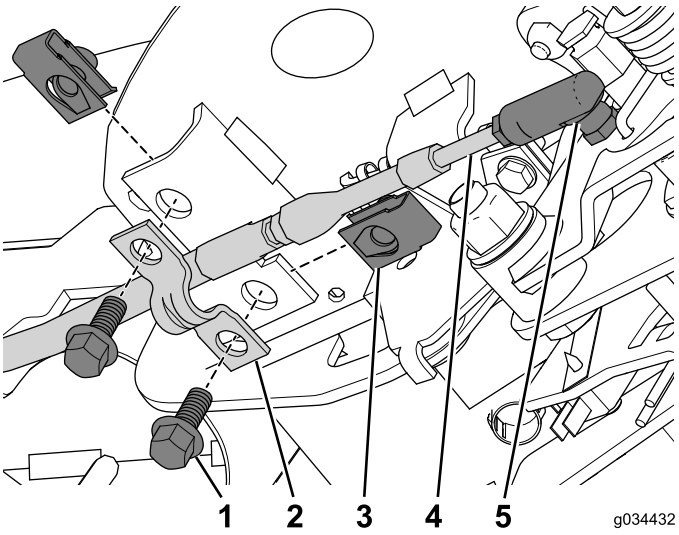

Figure 25

1. Bolt (1/4 x 5/8 inch)
2. Cable clamp
3. Retainer nut
4. Cable
5. Cable connector

4. Install the retainer nut onto the console assembly (Figure 25).
5. Use the 2 bolts (1/4 x 5/8 inch) to secure the cable with the cable clamp to the console assembly (Figure 25).
6. Secure the cable to the machine with cable ties.

Installing the Switches and Indicators

1. Press hour meter into the cutout until it is secure with the retainer (Figure 26).

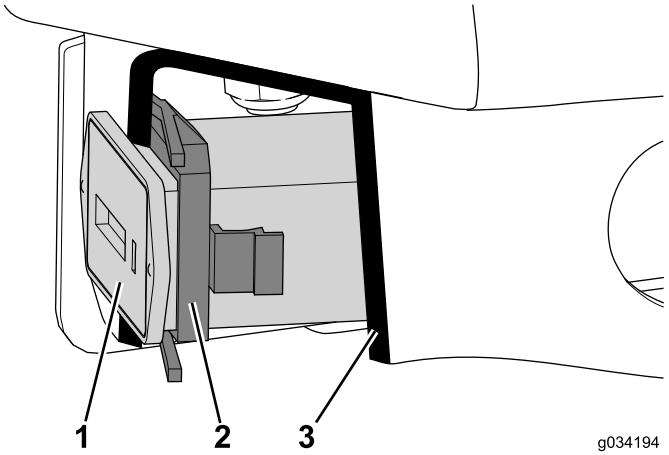

Figure 26
Cutaway View

1. Hour meter
2. Retainer
3. Cutaway

2. Use the retaining ring to secure the audio alarm to the console assembly (Figure 27).

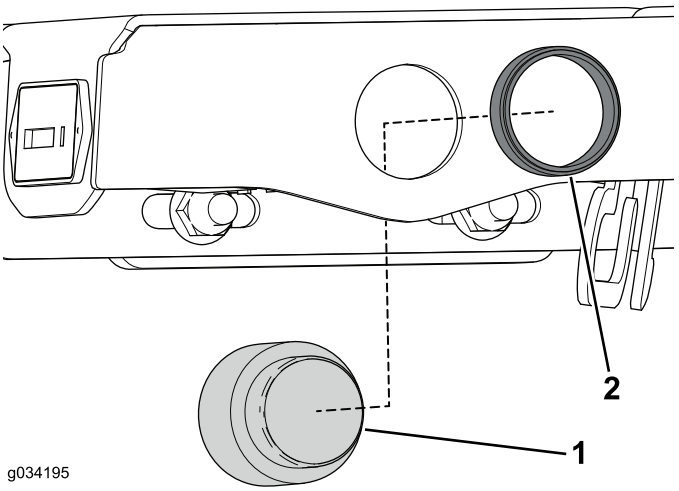

Figure 27

1. Audio alarm
2. Retaining ring

3. Use the retaining ring to secure the display to the console assemble (Figure 28).

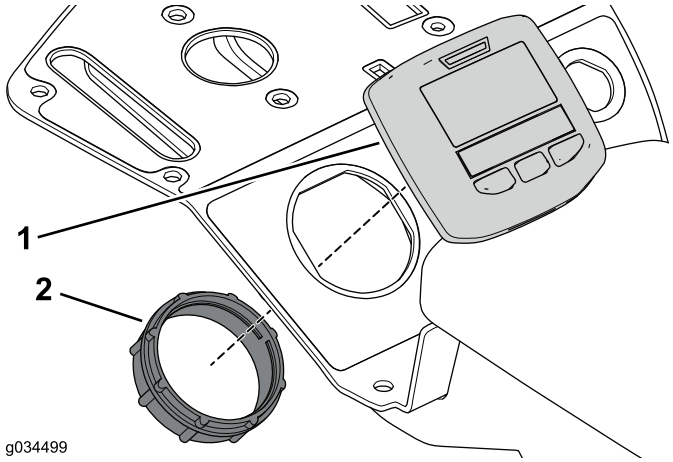

Figure 28

1. Display
2. Retaining ring

4. Use the retaining nut you removed earlier to secure the ignition switch to the console assembly (Figure 29).

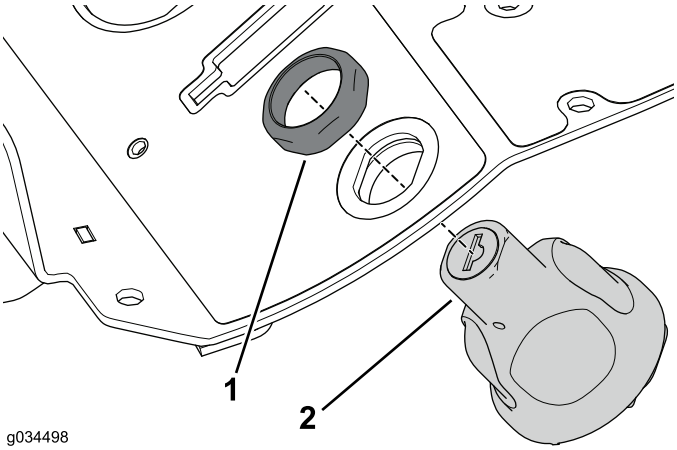

Figure 29

1. Retaining nut
2. Start switch

5. Connect the wire harness to the appropriate connections (Figure 30).

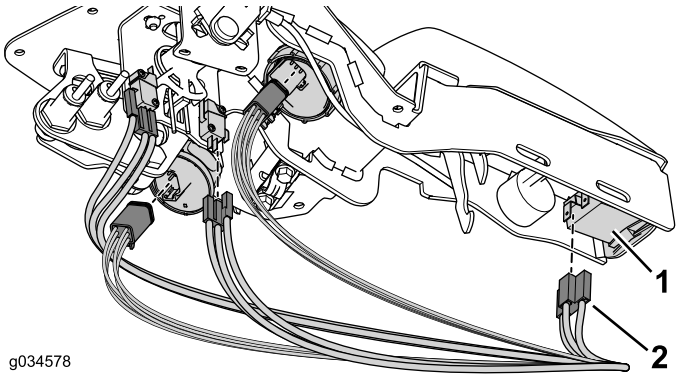

Figure 30

1. Control, indicator, or switch
2. Connector

Completing the Install

1. Use the 8 bolts that you removed earlier to secure the console cover to the console assembly (Figure 31).

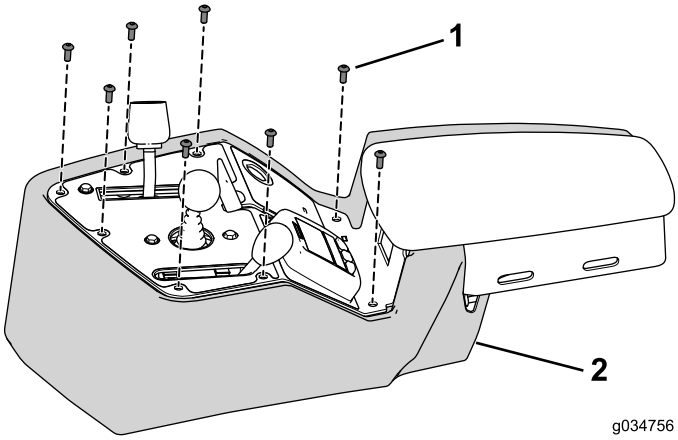

Figure 31

1. Bolt (10 x 1/2 inch)
2. Console cover

2. Connect the battery: Refer to the *Operator's Manual*.
3. Verify the function of the controls and adjust if necessary.

The Toro Warranty

A Two-Year Limited Warranty

Conditions and Products Covered

The Toro Company and its affiliate, Toro Warranty Company, pursuant to an agreement between them, jointly warrant your Toro Commercial product ("Product") to be free from defects in materials or workmanship for two years or 1500 operational hours*, whichever occurs first. This warranty is applicable to all products with the exception of Aerators (refer to separate warranty statements for these products). Where a warrantable condition exists, we will repair the Product at no cost to you including diagnostics, labor, parts, and transportation. This warranty begins on the date the Product is delivered to the original retail purchaser.
* Product equipped with an hour meter.

Instructions for Obtaining Warranty Service

You are responsible for notifying the Commercial Products Distributor or Authorized Commercial Products Dealer from whom you purchased the Product as soon as you believe a warrantable condition exists. If you need help locating a Commercial Products Distributor or Authorized Dealer, or if you have questions regarding your warranty rights or responsibilities, you may contact us at:

Toro Commercial Products Service Department
Toro Warranty Company
8111 Lyndale Avenue South
Bloomington, MN 55420-1196

952–888–8801 or 800–952–2740
E-mail: commercial.warranty@toro.com

Owner Responsibilities

As the Product owner, you are responsible for required maintenance and adjustments stated in your *Operator's Manual*. Failure to perform required maintenance and adjustments can be grounds for disallowing a warranty claim.

Items and Conditions Not Covered

Not all product failures or malfunctions that occur during the warranty period are defects in materials or workmanship. This warranty does not cover the following:

- Product failures which result from the use of non-Toro replacement parts, or from installation and use of add-on, or modified non-Toro branded accessories and products. A separate warranty may be provided by the manufacturer of these items.
- Product failures which result from failure to perform recommended maintenance and/or adjustments. Failure to properly maintain your Toro product per the Recommended Maintenance listed in the *Operator's Manual* can result in claims for warranty being denied.
- Product failures which result from operating the Product in an abusive, negligent, or reckless manner.
- Parts subject to consumption through use unless found to be defective. Examples of parts which are consumed, or used up, during normal Product operation include, but are not limited to, brake pads and linings, clutch linings, blades, reels, rollers and bearings (sealed or greasable), bed knives, spark plugs, castor wheels and bearings, tires, filters, belts, and certain sprayer components such as diaphragms, nozzles, and check valves, etc.
- Failures caused by outside influence. Conditions considered to be outside influence include, but are not limited to, weather, storage practices, contamination, use of unapproved fuels, coolants, lubricants, additives, fertilizers, water, or chemicals, etc.
- Failure or performance issues due to the use of fuels (e.g. gasoline, diesel, or biodiesel) that do not conform to their respective industry standards.
- Normal noise, vibration, wear and tear, and deterioration.
- Normal "wear and tear" includes, but is not limited to, damage to seats due to wear or abrasion, worn painted surfaces, scratched decals or windows, etc.

Parts

Parts scheduled for replacement as required maintenance are warranted for the period of time up to the scheduled replacement time for that part. Parts replaced under this warranty are covered for the duration of the original product warranty and become the property of Toro. Toro will make the final decision whether to repair any existing part or assembly or replace it. Toro may use remanufactured parts for warranty repairs.

Deep Cycle and Lithium-Ion Battery Warranty:

Deep cycle and Lithium-Ion batteries have a specified total number of kilowatt-hours they can deliver during their lifetime. Operating, recharging, and maintenance techniques can extend or reduce total battery life. As the batteries in this product are consumed, the amount of useful work between charging intervals will slowly decrease until the battery is completely worn out. Replacement of worn out batteries, due to normal consumption, is the responsibility of the product owner. Battery replacement may be required during the normal product warranty period at owner's expense. Note: (Lithium-Ion battery only): A Lithium-Ion battery has a part only prorated warranty beginning year 3 through year 5 based on the time in service and kilowatt hours used. Refer to the *Operator's Manual* for additional information.

Maintenance is at Owner's Expense

Engine tune-up, lubrication, cleaning and polishing, replacement of filters, coolant, and completing recommended maintenance are some of the normal services Toro products require that are at the owner's expense.

General Conditions

Repair by an Authorized Toro Distributor or Dealer is your sole remedy under this warranty.

Neither The Toro Company nor Toro Warranty Company is liable for indirect, incidental or consequential damages in connection with the use of the Toro Products covered by this warranty, including any cost or expense of providing substitute equipment or service during reasonable periods of malfunction or non-use pending completion of repairs under this warranty. Except for the Emissions warranty referenced below, if applicable, there is no other express warranty. All implied warranties of merchantability and fitness for use are limited to the duration of this express warranty.

Some states do not allow exclusions of incidental or consequential damages, or limitations on how long an implied warranty lasts, so the above exclusions and limitations may not apply to you. This warranty gives you specific legal rights, and you may also have other rights which vary from state to state.

Note regarding engine warranty:

The Emissions Control System on your Product may be covered by a separate warranty meeting requirements established by the U.S. Environmental Protection Agency (EPA) and/or the California Air Resources Board (CARB). The hour limitations set forth above do not apply to the Emissions Control System Warranty. Refer to the Engine Emission Control Warranty Statement supplied with your product or contained in the engine manufacturer's documentation for details

Countries Other than the United States or Canada

Customers who have purchased Toro products exported from the United States or Canada should contact their Toro Distributor (Dealer) to obtain guarantee policies for your country, province, or state. If for any reason you are dissatisfied with your Distributor's service or have difficulty obtaining guarantee information, contact the Toro importer.

374-0253 Rev D