Form No. 3397-715 Rev A

TORO®

Count on it.

Parts Catalog

Console Kit

Greensmaster® 3320 or 3420 Series TriFlex® Traction Unit

Model No. 132-9543

Register at www.Toro.com.
Original Instructions (EN)

CE

3397-715 A

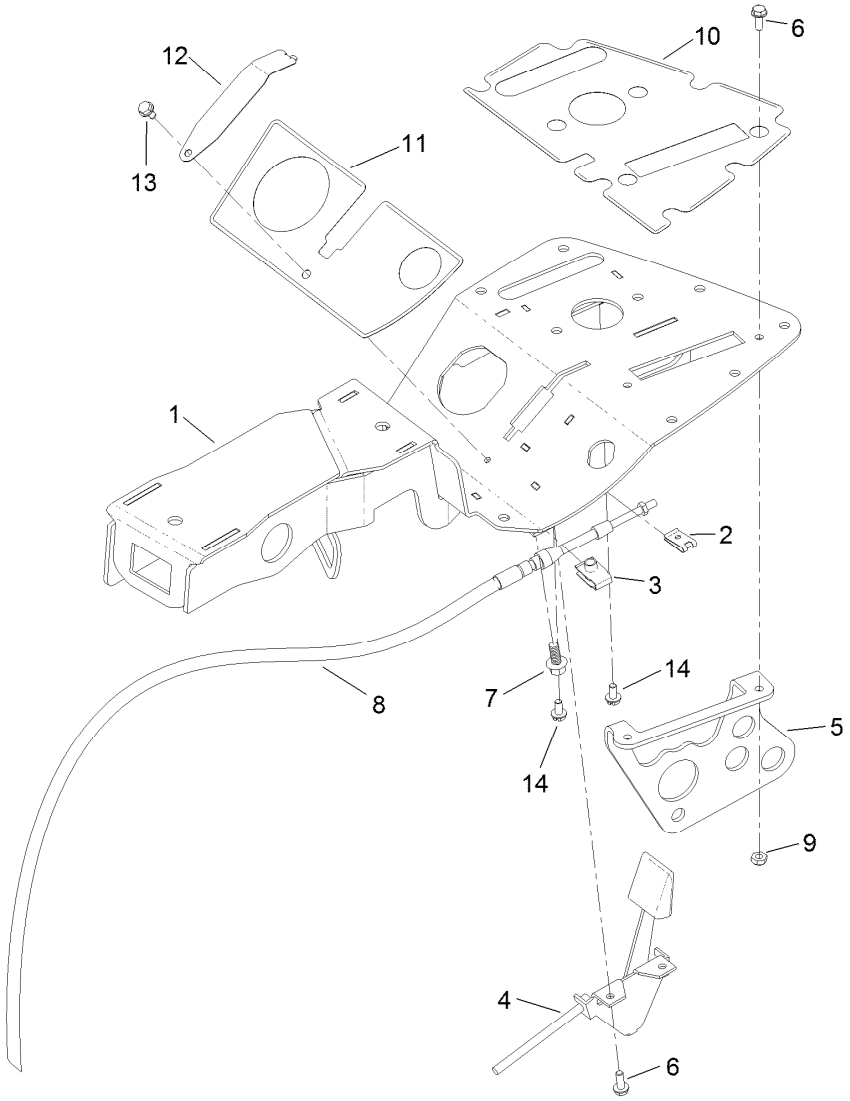

Console Kit Assembly No. 132-9543

Ref.	*Part Number*	*Qty.*	*Description*
1	132-9539-03	1	Console
2	3290-277	4	Nut-Speed
3	107069	2	Clip
4	132-9540	1	Lever-Choke
5	132-3822-03	1	Bracket
6	3290-321	4	Screw-HWH
7	99-6810	2	Screw-HHF
8	132-9544	1	Cable-Lock, Neutral
9	3296-12	2	Nut-Lock, NI
10	132-9548	1	Decal-Console
11	132-9550	1	Decal-Console
12	132-9592	1	Cover-Choke
13	104-2065	1	Screw-HWH
14	3290-144	2	Screw-SHWH