Form No. 3398-342 Rev A

TORO®

Count on it.

Operator's Manual

Debris Blower 600

Model No. 44536—Serial No. 310000001 and Up

Register at www.Toro.com.
Original Instructions (EN)

CE

3398-342 A

This product complies with all relevant European directives; for details, please see the separate product specific Declaration of Conformity (DOC) sheet.

⚠ WARNING

CALIFORNIA
Proposition 65 Warning

This product contains a chemical or chemicals known to the State of California to cause cancer, birth defects, or reproductive harm.

Introduction

This machine is a 3-point hitch, tractor-mounted, debris blower which is intended to be used by professional, hired operators in commercial applications. It is primarily designed to use wind power to quickly clear large areas of unwanted debris on well-maintained lawns in parks, sports fields, and on commercial grounds.

Read this information carefully to learn how to operate and maintain your product properly and to avoid injury and product damage. You are responsible for operating the product properly and safely.

You may contact Toro directly at www.Toro.com for product and accessory information, help finding a dealer, or to register your product.

Whenever you need service, genuine Toro parts, or additional information, contact an Authorized Service Dealer or Toro Customer Service and have the model and serial numbers of your product ready. Write the numbers in the space provided.

Model No. _____

Serial No. _____

This manual identifies potential hazards and has safety messages identified by the safety alert symbol (Figure 1), which signals a hazard that may cause serious injury or death if you do not follow the recommended precautions.



Figure 1

1. Safety alert symbol

This manual uses 2 words to highlight information. **Important** calls attention to special mechanical information and **Note** emphasizes general information worthy of special attention.

Contents

Safety 3
- Before Operating 3
- While Operating 3
- Maintenance 3
- Hauling 3
- Safety and Instructional Decals 4

Setup 6
- 1 Installing the Caster Wheels 6
- 2 Connecting the Lower Link Arms 6
- 3 Connecting the Upper Link 7
- 4 Adjusting the PTO Shaft Length 7
- 5 Connecting the PTO Shaft 8
- 6 Adjusting the Sway Links 8
- 7 Adjusting the 3-Point-Lift Stop 9
- 8 Removing the Blower from the Tractor 9
- 9 Greasing the Blower 10

Product Overview 10
- Specifications 10
- Attachments/Accessories 10

Operation 11
- Adjusting the Discharge Direction 11
- Operating Tips 11

Maintenance 12
- Greasing the Machine 12
- Adjusting the Blower Belt 12

Storage 13

Troubleshooting 14

© 2015—The Toro® Company

8111 Lyndale Avenue South
Bloomington, MN 55420

Contact us at www.Toro.com.
Printed in the USA
All Rights Reserved

Safety

Improperly using or maintaining the machine can result in injury. To reduce the potential for injury, comply with these safety instructions and always pay attention to the safety alert symbol ⚠, which means **Caution**, **Warning**, or **Danger**—personal safety instruction. **Failure to comply with the instruction may result in personal injury or death.**

Before Operating

- Read and understand the contents of this *Operator's Manual* before operating the machine. Become familiar with all of the controls and know how to stop quickly.
- Never allow children to operate the machine. Do not allow adults to operate machine without proper instruction. Only trained operators who have read this manual should operate this machine.
- Never operate the machine when under the influence of drugs or alcohol.
- Keep all bystanders away from the operating area.
- Keep all shields and safety devices in place. If a shield, safety device, or decal is illegible or damaged, repair or replace it before operation is commenced. Also tighten any loose nuts, bolts, and screws to ensure that the machine is in safe operating condition.
- Do not operate the machine while wearing sandals. Also, do not wear loose fitting clothing which could get caught in moving parts. Always wear long pants and substantial shoes. Wearing safety glasses and safety shoes is advisable and required by some local ordinances and insurance regulations.

While Operating

- • This product may exceed noise levels of 85 dB(A) at the operator position. Hearing protection is recommended for prolonged exposure to reduce the potential of permanent hearing damage.
- Using the machine demands attention. To prevent loss of control:
  - Operate only in daylight or when there is good artificial light.
  - Drive slowly and watch for holes or other hidden hazards.
  - Do not drive close to a sand trap, ditch, creek, or other hazard.
  - Reduce your speed when making sharp turns and when turning on hillsides.
  - Avoid sudden starts and stops.
  - Before backing up, look to the rear and ensure that no one is behind the machine.
  - Watch out for traffic when near or crossing roads. Always yield the right-of-way.
- Lightning can cause severe injury or death. If lightning is seen or thunder is heard in the area, do not operate the machine; seek shelter.
- Stay away from the discharge opening when the machine is operating. Keep all bystanders away from the discharge opening and don't direct discharge toward bystanders.
- If the engine stalls or the machine loses headway and cannot make it to the top of a slope, do not turn the machine around. Always back slowly straight down the slope.
- Do not take an injury risk! When a person or pet appears unexpectedly in or near the operating area, stop operation. Careless operation, combined with terrain angles, ricochets, or improperly positioned guards can lead to thrown object injuries. Do not resume operation until the area is cleared.
- Lower the blower to the ground and remove the key from the ignition switch whenever the machine is left unattended.

Maintenance

- Remove the key from the ignition switch to prevent accidental starting of the engine when servicing, adjusting, or storing the machine.
- Perform only those maintenance instructions described in this manual. If major repairs are ever needed or assistance is desired, contact an Authorized Toro Distributor.
- Be sure that the machine is in safe operating condition by keeping nuts, bolts, and screws tight. Check all bolts and nuts frequently to be sure that they are tightened to specification.
- To ensure optimum performance and safety, always purchase genuine Toro replacement parts and accessories to keep the machine all Toro. Never use "will-fit" replacement parts and accessories made by other manufacturers. Look for the Toro logo to ensure genuineness. Using unapproved replacement parts and accessories could void the warranty.

Hauling

- Use care when loading or unloading the machine into a trailer or truck.
- Tie the machine down securely using straps, chains, cable, or ropes. Both front and rear straps should be directed down and outward from the machine

Safety and Instructional Decals

Safety decals and instructions are easily visible to the operator and are located near any area of potential danger. Replace any decal that is damaged or lost.

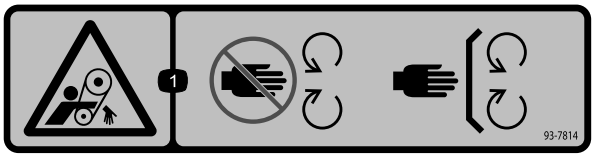

93-7814

1. Entanglement hazard, belt—stay away from moving parts; keep all guards and shields in place.

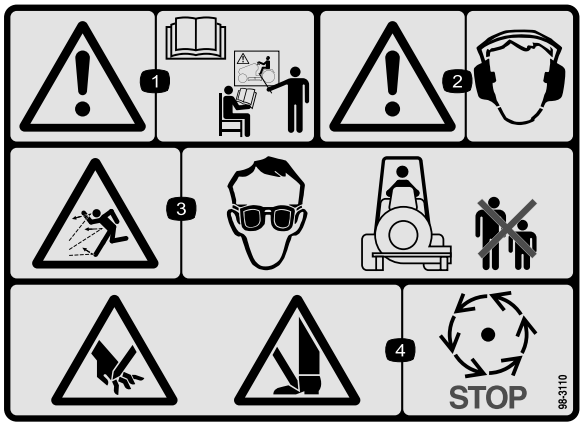

98-3110

1. Warning—read the *Operator's Manual* and receive training.
2. Warning—wear hearing protection.
3. Thrown object hazard—wear eye protection and keep bystanders a safe distance from the machine.
4. Cutting hazard of hand or foot—wait for moving parts to stop.

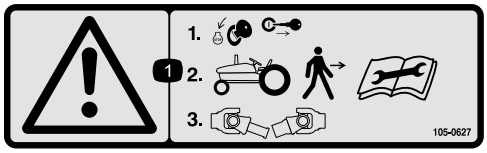

105-0627

1. Warning—stop the engine, remove the ignition key before leaving the machine and disconnect the power take–off (PTO) shaft.

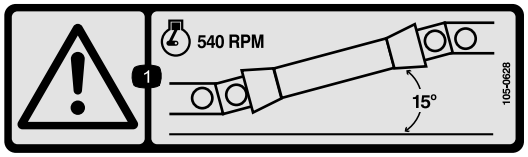

105-0628

1. Warning—do not operate the machine with power take-off (PTO) at a greater angle than 15 degrees.

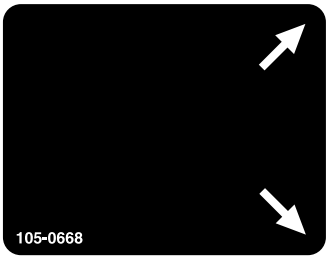

105-0668

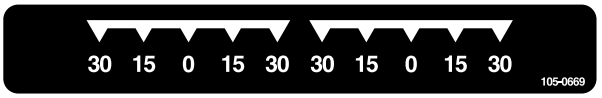

105-0669

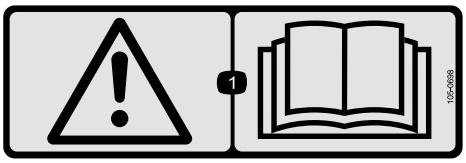

105-0698

Apply over decal 105-0707 for CE compliance

1. Warning—read the *Operator's Manual*.



105-0707

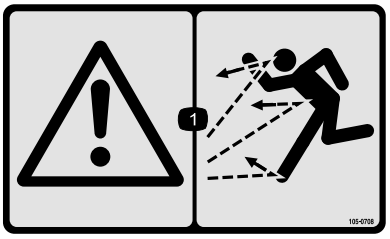

105-0708

1. Warning—thrown object hazard; keep bystanders away from machine.

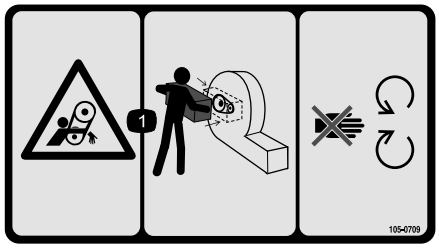

105-0709

1. Entanglement hazard, belt—keep all guards and shields in place; stay away from moving parts.

Setup

Loose Parts

Use the chart below to verify that all parts have been shipped.

Procedure	Description	Qty.	Use
1	No parts required	–	Install the caster wheels.
2	No parts required	–	Connect the lower link arms.
3	No parts required	–	Connect the upper link.
4	No parts required	–	Adjust the PTO shaft length.
5	No parts required	–	Connect the PTO shaft.
6	No parts required	–	Adjust the sway links.
7	No parts required	–	Adjust the 3-point-lift stop.
8	No parts required	–	Remove the blower from the tractor.
9	No parts required	–	Grease the blower.

Media and Additional Parts

Description	Qty.	Use
Operator's Manual	1	Review the manual before operating the machine.
Parts Catalog	1	Use the parts catalog to reference product part numbers.
CE Decal 105-0698	1	Apply over decal 105-0707 for CE compliance.

Note: Determine the left and right sides of the machine from the normal operating position.

1

Installing the Caster Wheels

No Parts Required

Procedure

Install a caster wheel assembly between each caster fork with 4 washers, an axle, and 2 cotter pins (Figure 2).

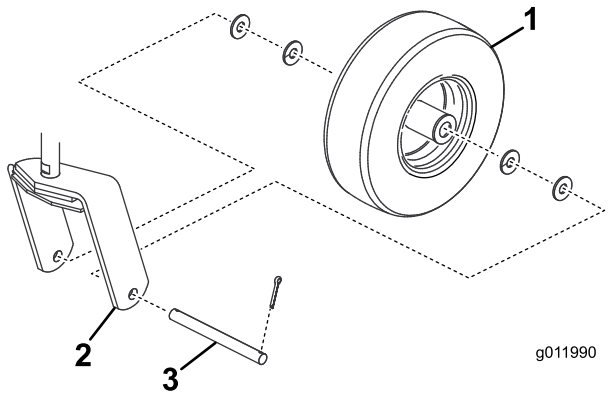

Figure 2

1. Wheel assembly
2. Caster fork
3. Axle

2

Connecting the Lower Link Arms

No Parts Required

Procedure

1. Position the blower on a flat, level surface and disengage the PTO.
2. Back the tractor squarely up to the blower until the lower link arms are aligned with the hitch pins.
3. Engage the parking brake, stop the engine, and remove the key from the ignition.

   Note: Wait for the engine and all moving parts to stop before leaving the operator's seat.
4. Insert the right and left, lower link arms onto the hitch pins (Figure 3).

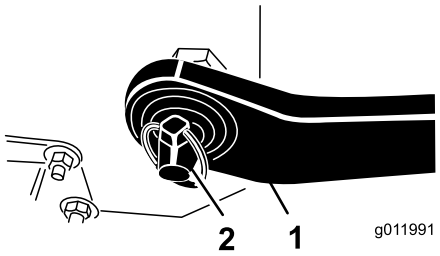

Figure 3

1. Lower link
2. Lynch pin

5. Secure the lower link arms to the hitch pins with the lynch pins (Figure 3).

3

Connecting the Upper Link

No Parts Required

Procedure

1. Connect the upper link to the holes in the blower bracket and secure it with a clevis pin and lynch pin (Figure 4).

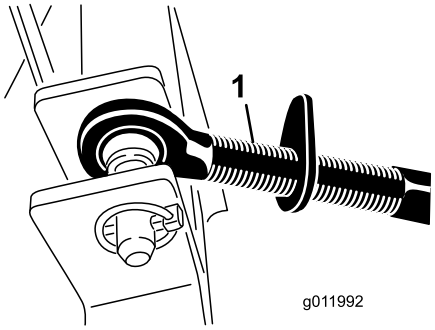

Figure 4

1. Upper link
2. Clevis pin
3. Lynch pin

2. Rotate the adjusting link to tighten the link.

   Note: Do not overtighten to raise the back end of the blower off the ground.
3. Tighten the locknut to secure the upper link into position.

4

Adjusting the PTO Shaft Length

No Parts Required

Procedure

Important: A long PTO shaft is supplied with the machine to accommodate large variations in the tractor's PTO and 3-point locations. For most machines, this shaft is too long and must be cut to the correct length, or damage may result.

1. With the blower on a level surface, lower the blower until the input shaft is approximately the same height as the tractor PTO shaft.

   Note: This is the shortest distance between the 2 shafts.
2. Measure the distance from the lock groove of the tractor PTO shaft to the lock groove at the blower-input shaft.

   Note: Record this dimension.
3. Fully collapse the PTO shaft and measure the distance between the lock pin collars.

   Note: Record this dimension.
4. At the shortest length of the shaft, the 2 halves of the PTO shaft must have at least 37 mm (1-1/2 inches) of additional clearance to collapse (Figure 5).

Note: If the dimension in step 2 is not at least 37 mm (1-1/2 inches) greater than the dimension in step 3, the PTO shaft is too long; proceed to step 5. If there is enough clearance to allow the PTO shaft to collapse, proceed to step 10.

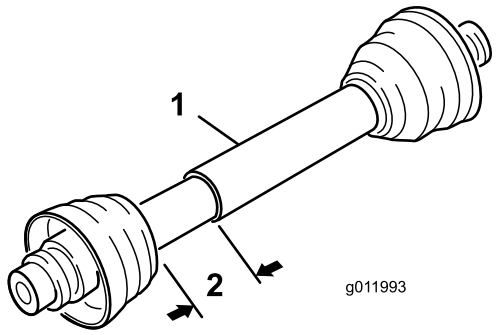

Figure 5

1. PTO shaft
2. 37 mm (1-1/2 inches) dimension

5. Use the following calculation to establish how much shorter the shaft must be, when connected, to ensure a clearance of 37 mm (1-1/2 inches):
   A. Subtract the dimension recorded in step 3 from the dimension recorded in step 2.

      Note: Record this dimension.

   B. Subtract the result in step 5A from 37 mm (1-1/2 inches).

      Note: The PTO shaft must be shortened by this amount.
6. Cut the guards and the steel tubes shorter by the calculated length.

   Note: Cut both halves of the PTO shaft.
7. Deburr the ends of the steel tubes internally and externally.
8. Remove all debris from the tube sections.
9. Grease the steel tubes.
10. Assemble the PTO shaft and secure it to the blower and tractor.
11. Measure the shaft.

    Note: If it is not at least 37 mm (1-1/2 inches), repeat the procedure.
12. Raise the blower to the highest position.

    Note: There must be at least 75 mm (3 inches) of overlap of the halves. Adjust the 3-point-lift stop, if necessary; refer to 7 Adjusting the 3-Point-Lift Stop (page 9).

5

Connecting the PTO Shaft

No Parts Required

Procedure

1. Connect the PTO shaft to the blower-input shaft.
2. Connect the PTO shaft to the rear tractor PTO shaft.
3. Slide the PTO shaft fully forward.
4. Depress the pin to secure the PTO shaft in place and slide the PTO shaft back and forth to ensure that it is properly locked (Figure 6).

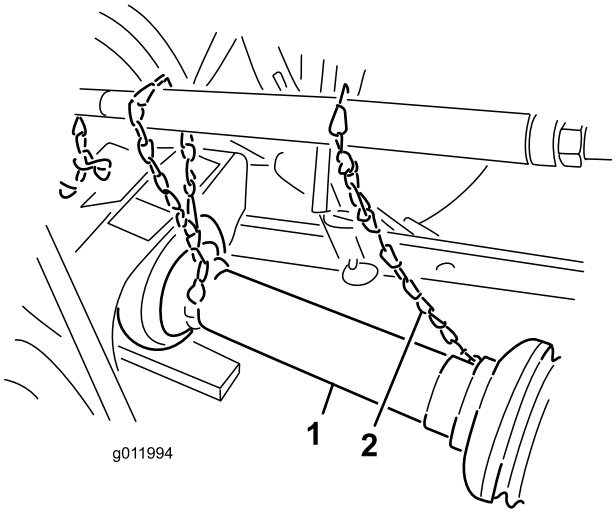

Figure 6

1. PTO shaft
2. Safety chain

5. Connect the shield safety chains from the power shaft sections to the welded clips on the link arms or to the PTO shields (Figure 6).

   Note: Ensure that the chains have slack when the blower is raised or lowered.

⚠ WARNING

If shield chains are not connected, they could rotate during operation and cause bodily injury.

Keep all PTO shields in place and connect the shield chains to the link arms or PTO shields.

6

Adjusting the Sway Links

No Parts Required

Procedure

Adjust the sway links on the lower draft arms of the 3-point hitch to minimize side-to-side sway to a maximum of 25 mm (1 inch) on each side.

1. Adjust the lower links inboard until they contact the blower mounting plates (Figure 7).

   Note: This will reduce the stress on the pins. If the tractor has sway chains instead of sway links, install the washers between the lower link arm and lynch pin to reduce the overhung load on the lift pins.

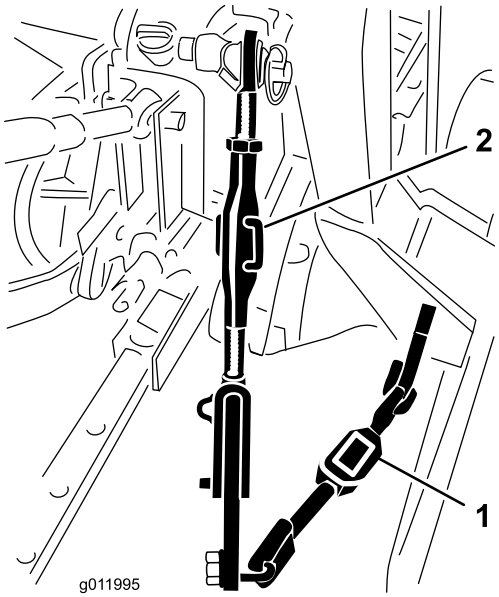

Figure 7

1. Sway link
2. Link body

2. Turn the adjustable-link body (if provided) to raise or lower the link arm until the blower is leveled from side to side (Figure 7).

Note: Refer to the tractor operator's manual for additional installation and adjustment procedures.

7

Adjusting the 3-Point-Lift Stop

No Parts Required

Procedure

Adjust and set the 3-point-lift stop to provide approximately 10 cm (4 inches) ground clearance, when in the raised position, to minimize the PTO angle when raising the blower. For transporting or trailer loading/unloading, the full-lift range can be used as long as the PTO tubes do not slide apart (Figure 8).

Important: Operating the PTO in the fully-raised position may damage the PTO or other components

Note: Refer to the tractor operator's manual for adjustment procedures.

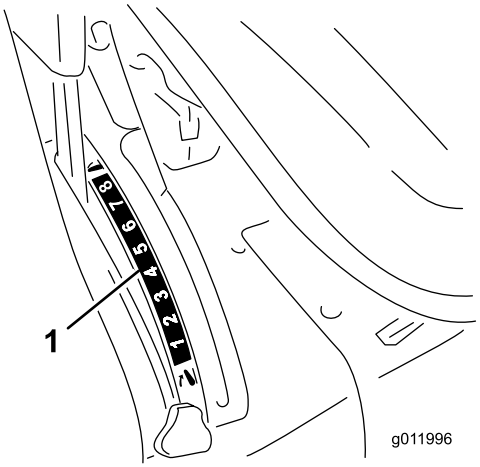

Figure 8

1. 3-point-lift stop

8

Removing the Blower from the Tractor

No Parts Required

Procedure

1. Park the machine on a level surface, disengage the PTO, engage the parking brake, stop the engine, and remove the key from the ignition.
2. Disconnect the safety-shield chains from the tractor PTO.

Note: Secure the end of the chain to the blower side of the PTO shaft to prevent the PTO shaft from coming apart.

3. Slowly lower the blower until the roller and caster wheels contact the ground.
4. Remove the lynch pin and top link pin securing the center link to the bracket.
5. Disconnect the power shaft from the tractor PTO shaft.
6. Slide the power shaft rearward and remove it from the tractor.
7. Remove the lynch pins and slide the lower link arms off the hitch pins.

9

Greasing the Blower

No Parts Required

Procedure

Before operating the blower, grease the PTO shaft to ensure proper lubricating characteristics; refer to Greasing the Machine (page 12).

Important: Failure to properly grease the unit will result in premature failure of critical parts.

Product Overview

Specifications

Note: Specifications and design are subject to change without notice.

Length	125 cm (49 inches)
Width	150 cm (59 inches)
Height	117 cm (46 inches)
Net weight	227 kg (500 lbs)

Attachments/Accessories

A selection of Toro approved attachments and accessories is available for use with the machine to enhance and expand its capabilities. Contact your Authorized Service Dealer or Distributor or go to www.Toro.com for a list of all approved attachments and accessories.

Operation

Note: Determine the left and right sides of the machine from the normal operating position.

Adjusting the Discharge Direction

The direction of the discharge opening can be changed from the side to the front by moving the control handle (Figure 9).

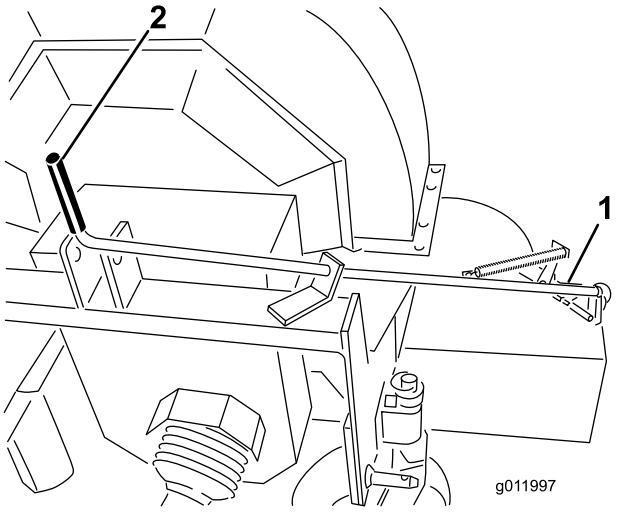

Figure 9

1. Discharge opening
2. Control handle

Operating Tips

⚠ WARNING

Discharged air has considerable force and could cause injury or loss of footing.

- **Stay away from the discharge opening when the machine is operating.**
- **Keep bystanders away from the discharge opening when the machine is running.**

1. Start the tractor and run it at a low engine speed.
2. Engage the PTO while the engine is at idle speed.
3. Increase the tractor PTO speed to 540 rpm.
4. Practice blowing material.

   Note: Blow in the same direction that the wind is blowing to prevent material from blowing back into the cleared area.

Maintenance

Note: Determine the left and right sides of the machine from the normal operating position.

Greasing the Machine

The machine has grease fittings that you must lubricate regularly with No. 2 lithium grease.

Fan-Shaft Bearings

Grease the 2 fan shaft bearings after every **8 hours** of operation (Figure 10).

Note: Remove belt cover to access rear fitting.

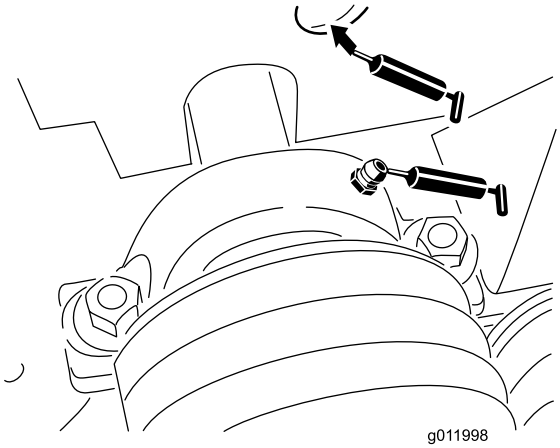

Figure 10

Caster Wheels

Grease the 2 drive-shaft fittings after every **100 hours** of use (Figure 11).

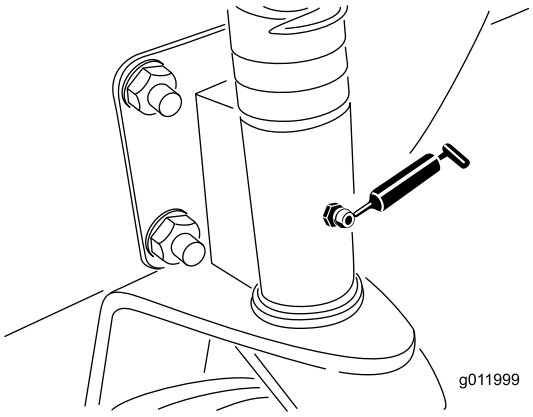

Figure 11

Drive Shaft

Grease the 2 drive-shaft fittings after every **100 hours** of use (Figure 12).

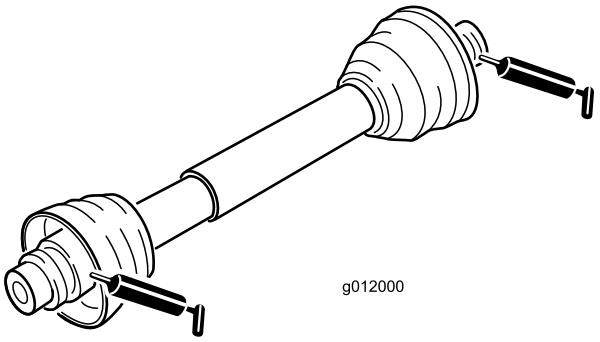

Figure 12

Adjusting the Blower Belt

Ensure that the belt is properly tensioned to ensure proper operation of the machine and unnecessary wear. Check the belt frequently.

Note: Check and/or adjust the blower-belt tension after the **first 20 hours** of operation.

Important: The fasteners on the covers of this machine are designed to remain on the cover after removal. Loosen all of the fasteners on each cover a few turns so that the cover is loose but still attached, then go back and loosen them until the cover comes free. This prevents you from accidentally stripping the bolts free of the retainers.

1. Remove the capscrews, washers, and nuts securing the belt guard to the blower housing (Figure 13).

   Note: The drive shaft does not have to be disconnected to adjust the belt.

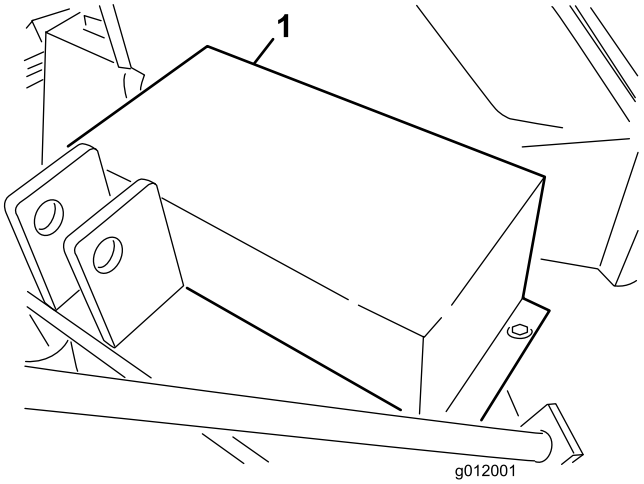

Figure 13

1. Belt guard

2. Remove the belt guard (Figure 13).

3. Remove capscrew and nut securing the tensioner guide to the blower frame (Figure 14).

   Note: The belt tension releases when the capscrew is removed.

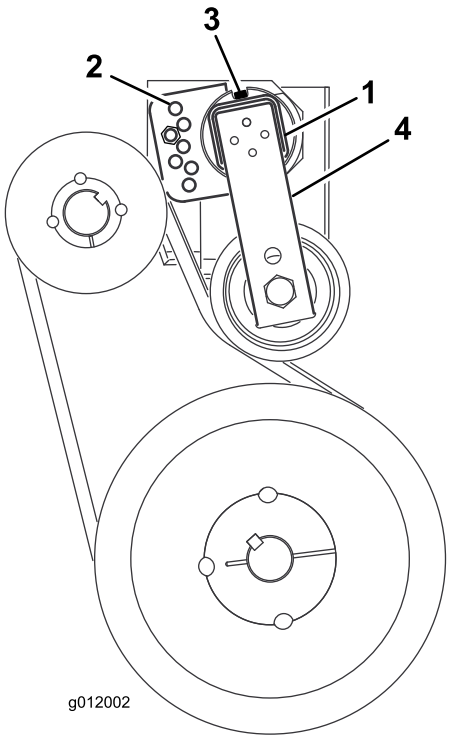

Figure 14

1. Belt-tensioner tube
2. Tensioner guide
3. Capscrew
4. Idler arm

4. On the rear of the frame, loosen the capscrew securing the belt tensioner to frame (Figure 14).
5. Position a large wrench on the tensioner and rotate the tensioner clockwise until the decal is aligned 15° on the tensioner tube.
6. Insert the capscrew into the aligned guide holes and secure it with the nut (Figure 14).

   Note: If holes are not exactly aligned, rotate the guide to the next higher hole until it is aligned.
7. Tighten the capscrew on the rear of the frame to lock the tensioner.
8. Install the belt guard to the blower housing with the capscrews, washers, and nuts.

Storage

1. Thoroughly clean the blower.

   Note: The fan housing should be free of dirt, leaves, and debris.
2. Lubricate all grease fittings. Wipe off any excess lubricant.
3. Place a light coat of grease on the splines of the PTO shaft.
4. Tighten all fasteners.

Troubleshooting

Problem	Possible Cause	Corrective Action
There is excessive vibration.	1. The bearing(s) on the fan shaft is damaged. 2. Material is built up on the fan blades. 3. The engine speed of the PTO shaft is too fast.	1. Replace the bearings. 2. Clean out any build up on the inside of the housing. 3. Reduce the PTO speed to 540 rpm.
There is lack of adequate air flow.	1. The air slots are clogged with debris. 2. The engine speed on the tractor is too slow. 3. The throttle on the tractor engine is too slow.	1. Clean out any debris from the slots. 2. Increase the PTO speed to 540 rpm. 3. Make any necessary repairs to bring the tractor speed up to normal.

Notes:

Toro General Commercial Product Warranty

A Two-Year Limited Warranty

Conditions and Products Covered

The Toro Company and its affiliate, Toro Warranty Company, pursuant to an agreement between them, jointly warrant your Toro Commercial product ("Product") to be free from defects in materials or workmanship for two years or 1500 operational hours*, whichever occurs first. This warranty is applicable to all products with the exception of Aerators (refer to separate warranty statements for these products). Where a warrantable condition exists, we will repair the Product at no cost to you including diagnostics, labor, parts, and transportation. This warranty begins on the date the Product is delivered to the original retail purchaser.
* Product equipped with an hour meter.

Instructions for Obtaining Warranty Service

You are responsible for notifying the Commercial Products Distributor or Authorized Commercial Products Dealer from whom you purchased the Product as soon as you believe a warrantable condition exists. If you need help locating a Commercial Products Distributor or Authorized Dealer, or if you have questions regarding your warranty rights or responsibilities, you may contact us at:

Toro Commercial Products Service Department
Toro Warranty Company
8111 Lyndale Avenue South
Bloomington, MN 55420-1196

952–888–8801 or 800–952–2740
E-mail: commercial.warranty@toro.com

Owner Responsibilities

As the Product owner, you are responsible for required maintenance and adjustments stated in your *Operator's Manual*. Failure to perform required maintenance and adjustments can be grounds for disallowing a warranty claim.

Items and Conditions Not Covered

Not all product failures or malfunctions that occur during the warranty period are defects in materials or workmanship. This warranty does not cover the following:

- Product failures which result from the use of non-Toro replacement parts, or from installation and use of add-on, or modified non-Toro branded accessories and products. A separate warranty may be provided by the manufacturer of these items.
- Product failures which result from failure to perform recommended maintenance and/or adjustments. Failure to properly maintain your Toro product per the Recommended Maintenance listed in the *Operator's Manual* can result in claims for warranty being denied.
- Product failures which result from operating the Product in an abusive, negligent, or reckless manner.
- Parts subject to consumption through use unless found to be defective. Examples of parts which are consumed, or used up, during normal Product operation include, but are not limited to, brake pads and linings, clutch linings, blades, reels, rollers and bearings (sealed or greasable), bed knives, spark plugs, castor wheels and bearings, tires, filters, belts, and certain sprayer components such as diaphragms, nozzles, and check valves, etc.
- Failures caused by outside influence. Conditions considered to be outside influence include, but are not limited to, weather, storage practices, contamination, use of unapproved fuels, coolants, lubricants, additives, fertilizers, water, or chemicals, etc.
- Failure or performance issues due to the use of fuels (e.g. gasoline, diesel, or biodiesel) that do not conform to their respective industry standards.
- Normal noise, vibration, wear and tear, and deterioration.
- Normal "wear and tear" includes, but is not limited to, damage to seats due to wear or abrasion, worn painted surfaces, scratched decals or windows, etc.

Parts

Parts scheduled for replacement as required maintenance are warranted for the period of time up to the scheduled replacement time for that part. Parts replaced under this warranty are covered for the duration of the original product warranty and become the property of Toro. Toro will make the final decision whether to repair any existing part or assembly or replace it. Toro may use remanufactured parts for warranty repairs.

Deep Cycle and Lithium-Ion Battery Warranty:

Deep cycle and Lithium-Ion batteries have a specified total number of kilowatt-hours they can deliver during their lifetime. Operating, recharging, and maintenance techniques can extend or reduce total battery life. As the batteries in this product are consumed, the amount of useful work between charging intervals will slowly decrease until the battery is completely worn out. Replacement of worn out batteries, due to normal consumption, is the responsibility of the product owner. Battery replacement may be required during the normal product warranty period at owner's expense. Note: (Lithium-Ion battery only): A Lithium-Ion battery has a part only prorated warranty beginning year 3 through year 5 based on the time in service and kilowatt hours used. Refer to the *Operator's Manual* for additional information.

Maintenance is at Owner's Expense

Engine tune-up, lubrication, cleaning and polishing, replacement of filters, coolant, and completing recommended maintenance are some of the normal services Toro products require that are at the owner's expense.

General Conditions

Repair by an Authorized Toro Distributor or Dealer is your sole remedy under this warranty.

Neither The Toro Company nor Toro Warranty Company is liable for indirect, incidental or consequential damages in connection with the use of the Toro Products covered by this warranty, including any cost or expense of providing substitute equipment or service during reasonable periods of malfunction or non-use pending completion of repairs under this warranty. Except for the Emissions warranty referenced below, if applicable, there is no other express warranty. All implied warranties of merchantability and fitness for use are limited to the duration of this express warranty.

Some states do not allow exclusions of incidental or consequential damages, or limitations on how long an implied warranty lasts, so the above exclusions and limitations may not apply to you. This warranty gives you specific legal rights, and you may also have other rights which vary from state to state.

Note regarding engine warranty:

The Emissions Control System on your Product may be covered by a separate warranty meeting requirements established by the U.S. Environmental Protection Agency (EPA) and/or the California Air Resources Board (CARB). The hour limitations set forth above do not apply to the Emissions Control System Warranty. Refer to the Engine Emission Control Warranty Statement supplied with your product or contained in the engine manufacturer's documentation for details

Countries Other than the United States or Canada

Customers who have purchased Toro products exported from the United States or Canada should contact their Toro Distributor (Dealer) to obtain guarantee policies for your country, province, or state. If for any reason you are dissatisfied with your Distributor's service or have difficulty obtaining guarantee information, contact the Toro importer.

374-0253 Rev C