FORM NO. 3318–110GB Rev. A

TORO®

## Wheel Horse®

# 42" Mower

## for

## Lawn & Garden Tractors

### Model No. 78232 – 6900001 & Up

# Operator's Manual

**IMPORTANT:** Read this manual carefully. It contains information about your safety and the safety of others. Also become familiar with the controls and their proper use before you operate the product.

# Introduction

We want you to be completely satisfied with your new product, so feel free to contact your local Authorized Service Dealer for help with service, genuine replacement parts, or other information you may require.

Whenever you contact your Authorized Service Dealer or the factory, always know the model and serial numbers of your product. These numbers will help the Service Dealer or Service Representative provide exact information about your specific product. You will find the model and serial number plate located in a unique place on the product as shown below.

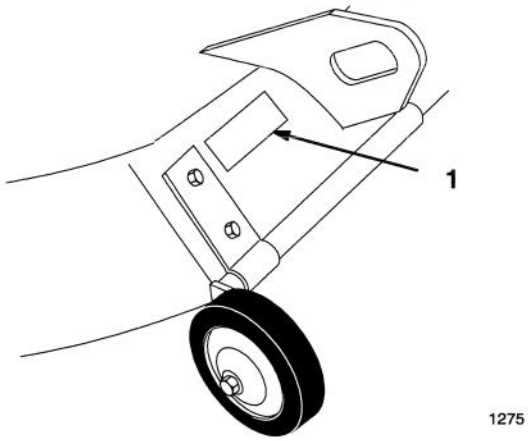


1. Model and Serial Number Plate

For your convenience, write the product model and serial numbers in the space below.

**Model No:** _____

**Serial No.** _____

The warning system in this manual identifies potential hazards and has special safety messages that help you and others avoid personal injury, even death. DANGER, WARNING and CAUTION are signal words used to identify the level of hazard. However, regardless of the hazard, be extremely careful.

**DANGER** signals an extreme hazard that will cause serious injury or death if the recommended precautions are not followed.

**WARNING** signals a hazard that may cause serious injury or death if the recommended precautions are not followed.

**CAUTION** signals a hazard that may cause minor or moderate injury if the recommended precautions are not followed.

Two other words are also used to highlight information. "Important" calls attention to special mechanical information and "Note" emphasizes general information worthy of special attention.

The left and right side of the machine is determined by sitting on the seat in the normal operator's position.

Printed in USA

# Contents


| | Page |
|---|---|
| Safety and Instruction Decals | 2 |
| Installation | 3 |
| Loose Parts | 3 |
| Mower Preparation | 4 |
| Installing the Mower | 6 |
| Transport Height Adjustment | 7 |
| Side-to-Side Mower Leveling | 8 |
| Front-to-Rear Blade Slope | 9 |
| Removing the Mower | 10 |
| Operation | 11 |
| Side Discharge | 11 |
| Operating the Power Take Off (PTO) | 11 |
| Attachment Lift Lever | 12 |
| Attachment Power Lift | 12 |
| Adjusting Dial-A-Height | 13 |
| Tips for Mowing Grass | 14 |
| Maintenance | 15 |
| Service Interval Chart | 15 |
| Cutting Blade | 16 |
| Greasing and Lubrication | 18 |
| Blade Drive Belt | 18 |
| Storage | 19 |
| Troubleshooting | 20 |

# Safety and Instruction Decals

Safety decals and instructions are easily visible to the operator and are located near any area of potential danger. Replace any decal that is damaged or lost.

**ON GRASS DEFLECTOR**
**(Part No. 93–7317)**



**ON GRASS DEFLECTOR**
**(Part No. 93–7316)**

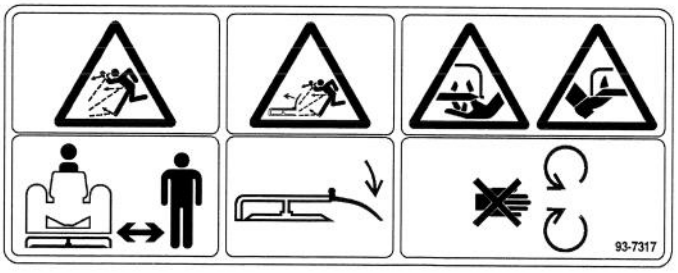


**ON MOWER REAR CENTER**
**(Part No. 93–7325)**

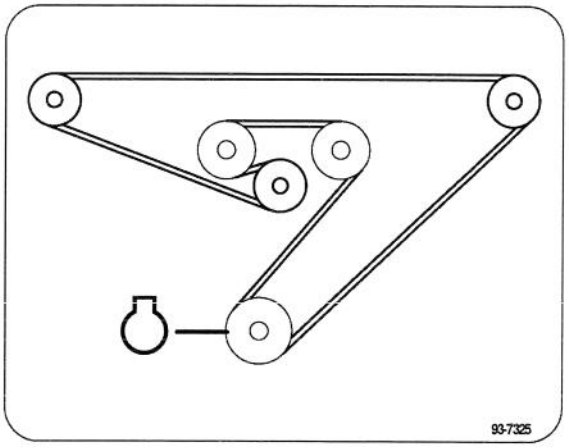

# Installation

## Loose Parts

**Note:** Use the chart below to identify parts used for assembly.

| DESCRIPTION | QTY. | USE |
|---|---|---|
| Grass deflector | 1 | Install grass deflector |
| Spring | 1 | |
| Washer 1/2" (13 mm) | 1 | |
| Cotter pin | 1 | |
| Plastic washer | 2 | |
| Rubber bushing | 1 | |
| Lock nut 3/8" | 2 | |
| Rear link | 1 | Install rear link |
| Washer | 2 | |
| Cotter pin | 2 | |
| Adjustable link | 1 | Install front mount to mower |
| Washer 1/2" (13 mm) | 1 | |
| Cotter pin 1" (26 mm) | 1 | |
| Hairpin cotter–large | 2 | Install mower to tractor |
| Washer 3/4" (19 mm) | 2 | |
| Hairpin cotter–small | 2 | |
| Washer 1/2" (13 mm) | 2 | |
| Operator's Manual | 1 | Read before operating |

## Mower Preparation

1. Place spring short end into small hole in the grass deflector (Fig. 1).
2. Position spring and grass deflector over post on rear of deck and secure with cotter pin (Fig. 1).
3. Slide rubber bushing and plastic washer over stud at front of mower.
4. Place grass deflector over stud and secure with second plastic washer and lock nut (Fig. 1).

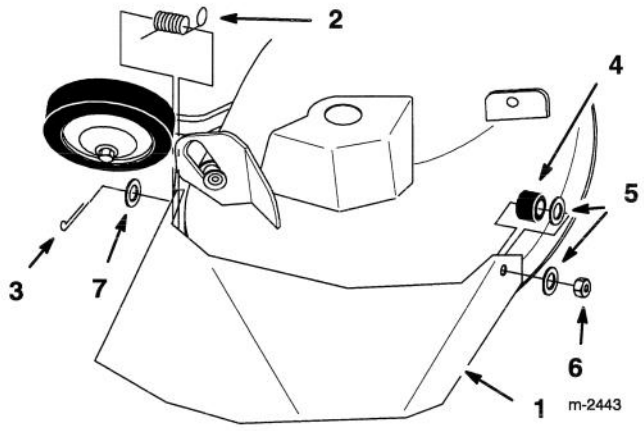


**Figure 1**

1. Grass deflector
2. Spring
3. Cotter pin
4. Rubber bushing
5. Plastic washer
6. Lock nut
7. Washer

**IMPORTANT: Discharge chute must be spring loaded in the down position. Lift chute up to test that it snaps to the full down position.**

**⚠ DANGER**

**POTENTIAL HAZARD**

- **Without the grass deflector, discharge cover, or complete grass catcher assembly mounted in place, you and others are exposed to blade contact and thrown debris.**

**WHAT CAN HAPPEN**

- **Contact with rotating mower blade(s) and thrown debris will cause injury or death.**

**HOW TO AVOID THE HAZARD**

- **NEVER remove the grass deflector from the mower because the grass deflector routes material down toward the turf. If the grass deflector is ever damaged, replace it immediately.**
- **Never put your hands or feet under the mower.**
- **Never try to clear discharge area or mower blades unless you move the power take off (PTO) to "OFF" and rotate the ignition key to "OFF." Also remove the key and pull the wire off the spark plug(s).**

5. Place rear link on mower rear bracket and secure with 1/2" (13 mm) washer and cotter pin (Fig. 2).

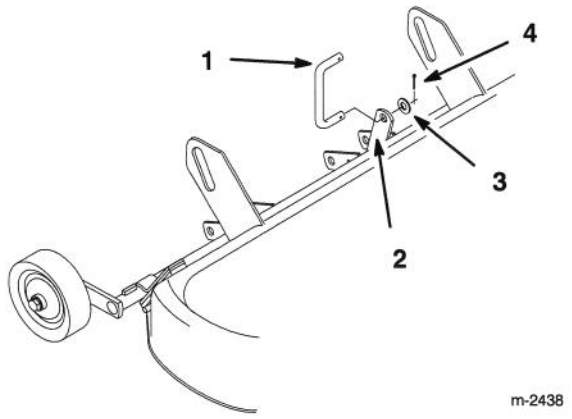


**Figure 2**

1. Rear link
2. Bracket
3. Washer 1/2" (13 mm)
4. Cotter pin

6. Place adjustable link on mower bracket and secure with 1/2" (13 mm) washer and cotter pin (Fig. 3).

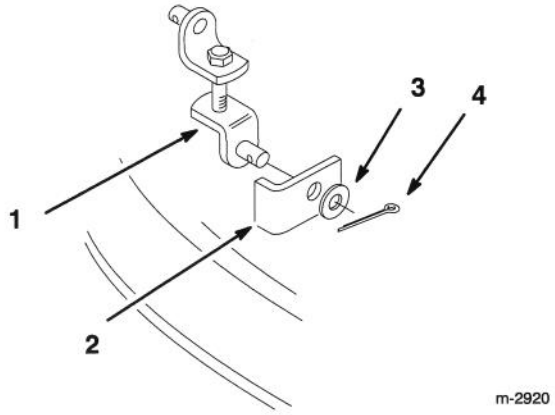


**Figure 3**

1. Adjustable link
2. Bracket
3. Washer 1/2" (13 mm)
4. Cotter pin

# Installing the Mower

1. Park the machine on a level surface, disengage the power take off (PTO), set the parking brake, and turn the ignition key to "OFF" to stop the engine. Remove the key.

2. Turn the front wheels fully to the left and raise attachment lift lever all the way to the latched position; refer to tractor Operator's Manual.

3. Slide the mower under the chassis from the right side (Fig. 4) and align rear mounting bushings with ends of lift arms.

4. Turn Dial-a-Height knob counterclockwise, all the way, and lower the attachment lift lever to the mounting position; refer to Operation page .

5. Place rear guide bushings, first left side then right, onto lift arms then slide deck left into position. Secure with 3/4" (19 mm) washers and large hairpin cotters (Fig. 4).

6. Attach rear link to attachment lift with 1/2" (13 mm) washer and small hairpin cotter (Fig. 4).

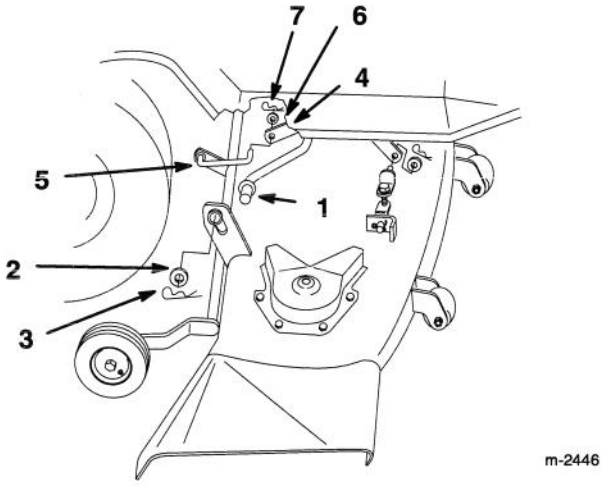


**Figure 4**

1. Lift arms
2. Washer 3/4" (19 mm)
3. Hairpin cotter-large
4. Attachment lift
5. Rear link
6. Washer 1/2" (13 mm)
7. Hairpin cotter-small

7. Install front adjustable link to front lift arm with washer and small hairpin cotter (Fig. 11).

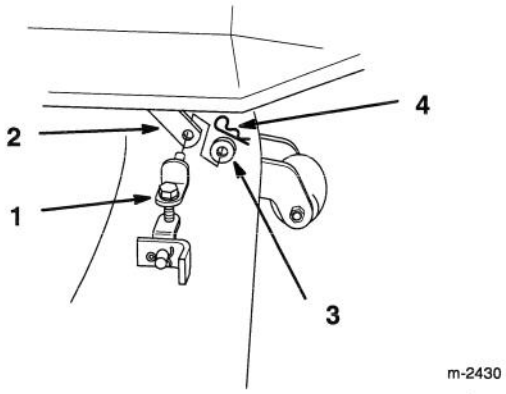


**Figure 5**

1. Adjustable link
2. Front lift arm
3. Washer 1/2" (13 mm)
4. Hairpin cotter-small

8. Pull on idler pulley to relax belt tension and install mower drive belt into the top engine drive pulley groove (Fig. 6).

   **Note:** Make sure belt is properly located in engine and deck pulleys and around idler pulley.

   **IMPORTANT: If extreme low cut height is used install mower drive belt in bottom engine pulley.**

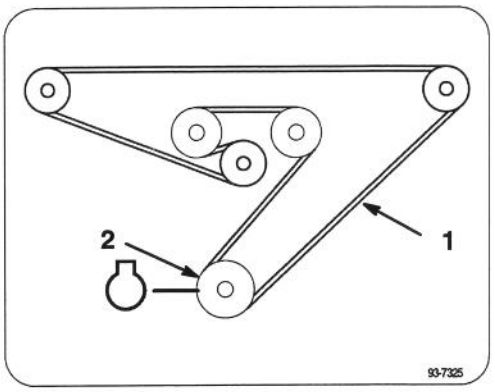


**Figure 6**

Top View

1. Mower belt
2. Engine pulley

9. Check mower level; refer to Side-to-Side Mower Leveling page 8, and Front-to-Rear Blade Leveling page 9.

10. Raise attachment lift lever all the way to the latched position and adjust mower height-of-cut; and transport height adjustment; refer to page 7.

# Transport Height Adjustment

Transport height is set at the factory and should not need adjustment; however if the belt covers contact the footrest in the raised position, adjustment is required.

1. Adjust by turning transport height nut, (Fig. 7) on lift mechanism, clockwise to raise or counterclockwise to lower mower.

2. Adjust nut until there is 1/16"–1/8" (2–5 mm) clearance between belt cover and left footrest.

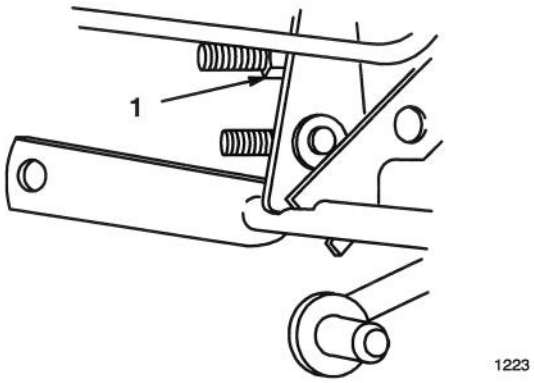


**Figure 7**

1. Nut

# Side-to-Side Mower Leveling

The mower blades must be level from side to side. Check the side-to-side level any time you install the mower or when you see an uneven cut on your lawn. Before you level the mower, set the air pressure in the front and rear tires to 12 psi (.85 kPa).

## 2-3/4"–4" (70–102 mm) Height-of-Cut Range

When the mower height-of-cut is set to the 2-3/4"–4" (70–102 mm) range the mower is suspended from the tractor.

1. Park the machine on a level surface, disengage the power take off (PTO), set the parking brake, and turn the ignition key to "OFF" to stop the engine. Remove the key.
2. Raise attachment lift lever all the way to the latched position.
3. Carefully rotate blade(s) side to side (Fig. 8). Measure between the outside cutting edges and the flat surface (Fig. 8). If both measurements are not within 3/16" (5 mm), an adjustment is required; refer to steps 4 and 6.

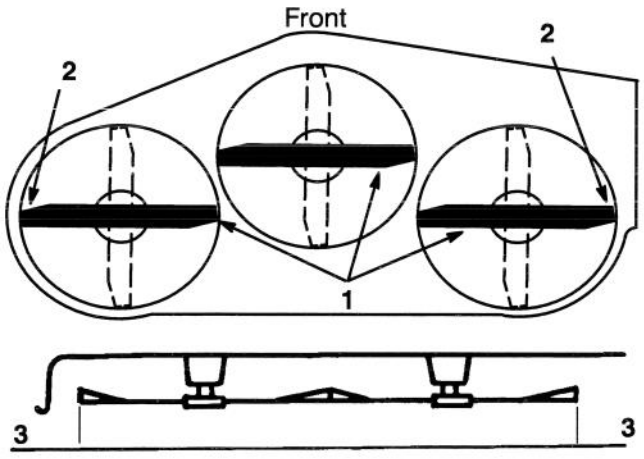


**Figure 8**

1. Blades side to side
2. Outside cutting edges
3. Measure here

4. Loosen adjustment bolt on one side and rotate hanger bracket to raise or lower mower (Fig. 9).
5. After adjusting, tighten bolt and check side-to-side level.

   **IMPORTANT: If hanger is rotated to the end of adjustment on one side and mower is not level, adjust the opposite side.**

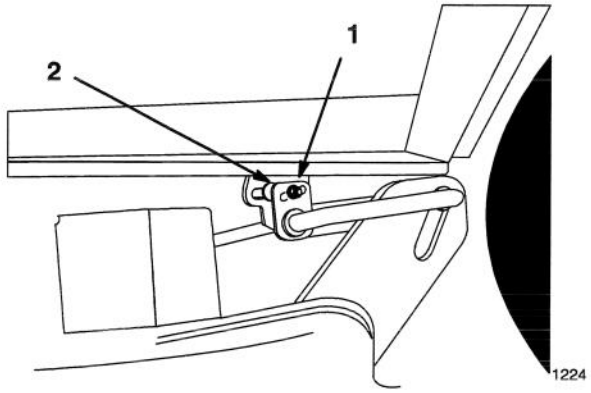


**Figure 9**

1. Bolt
2. Hanger bracket

6. Now check the front-to-rear blade slope; refer to Front-to-Rear Blade Slope, page 9.

## 3/4"–2-3/4" (19–70 mm) Height-of-Cut Range

When the mower height-of-cut is set to the 3/4"–2-3/4" (19–70 mm) range the rear gage wheels contact the ground. There is no side-to-side adjustment for this height range, see Front-to-Rear Blade Slope.

## Front-to-Rear Blade Slope

Check the front-to-rear blade slope any time you install the mower. Before checking the slope, set air pressure in the front and rear tires to 12 psi (.85 kPa). If the front blade tip is not 0–3/8" (0–9.5 mm) lower than the rear blade tip, adjust the blade slope using the following instructions:

1. Park the machine on a level surface, disengage the power take off (PTO), set the parking brake, and turn the ignition key to "OFF" to stop the engine. Remove the key.

2. Check and adjust side-to-side blade level if you have not checked the setting; refer to Side-to-Side Mower Leveling, page 8.

3. Adjust the Dial-A-Height knob so the height-of-cut is in the middle of the range and lower attachment lift.

4. Carefully rotate blades so they are facing front and rear (Fig. 10).

5. Measure between the tip of the front blade (Fig. 10). and the tip of the rear blade to the flat surface. If the front blade tip is not 0–3/8" (0–9.5 mm) lower than the rear blade tip adjust front adjustment link.

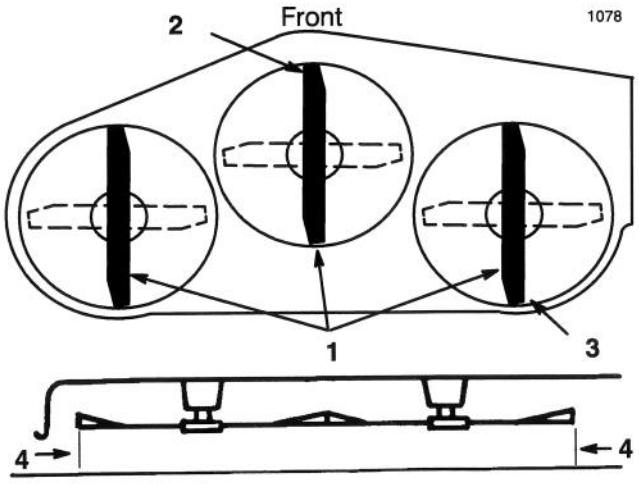


**Figure 10**

1. Blade front to rear
2. Measure front blade tip
3. Measure rear blade tip
4. Measure here

6. To adjust front-to rear blade level, loosen jam nut on front adjustable link (Fig. 11).

7. Rotate the bolt on front adjustable link to change front-to rear blade level (Fig. 11).

   **Note:** To raise the front of the mower, shorten the adjustable link by turning bolt clockwise.

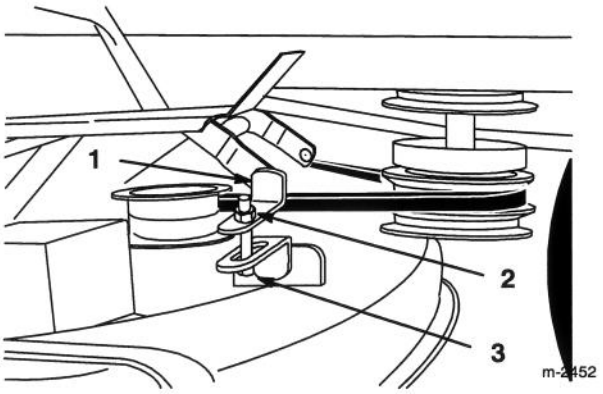


**Figure 11**

1. Adjustable link
2. Jam nut
3. Bolt

8. When front-to-rear slope is correct, tighten jam nut. Recheck side-to-side mower level; refer to Side-to-Side Mower Leveling, page 8.

# Removing the Mower

1. Park the machine on a level surface, disengage the power take off (PTO), set the parking brake, and turn the ignition key to "OFF" to stop the engine. Remove the key.

2. Turn the front wheels fully to the left and raise attachment lift lever all the way to the latched position; refer to tractor Operator's Manual.

3. Remove mower drive belt from engine pulley.

4. Remove small hairpin cotter and washer from front adjustable link and remove from front lift arm (Fig. 12).

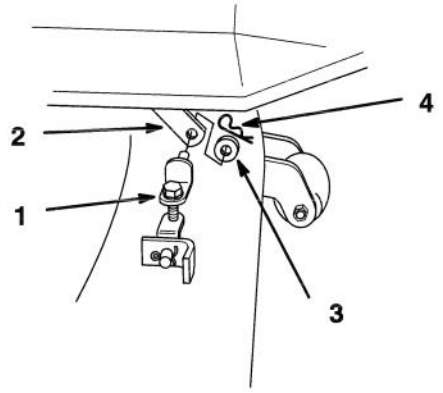


**Figure 12**

1. Adjustable link
2. Front lift arm
3. Washer 1/2" (13 mm)
4. Hairpin cotter-small

5. Remove small hairpin cotter and washer from rear link and remove from attachment lift (Fig. 13).

6. Remove hairpin cotters and washers from rear lift arms (Fig. 13).

7. Slide deck right, off rear lift arms (Fig. 13).

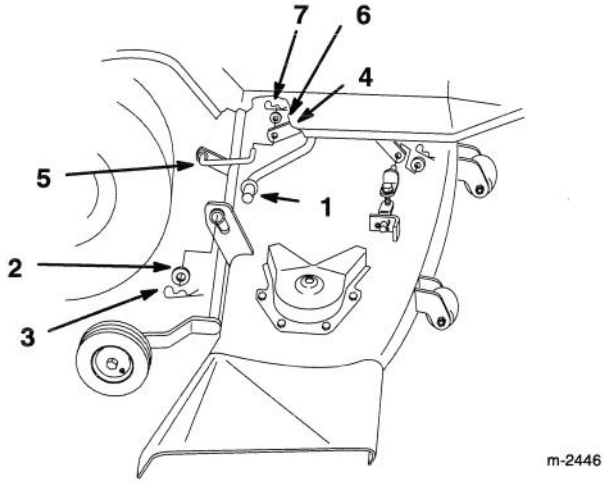


**Figure 13**

1. Lift arms
2. Washer 3/4" (19 mm)
3. Hairpin cotter-large
4. Attachment lift
5. Rear link
6. Washer 1/2" (13 mm)
7. Hairpin cotter-small

8. Raise attachment lift all the way to the latched position. Turn the front wheels, as necessary, and slide the mower out to the the right side.

   **Note:** Save all hardware, washers and hairpin cotters for use when installing deck.

# Operation

## Side Discharge

**⚠ DANGER**

**POTENTIAL HAZARD**

- **Without the grass deflector, discharge cover, or complete grass catcher assembly mounted in place, you and others are exposed to blade contact and thrown debris.**

**WHAT CAN HAPPEN**

- **Contact with rotating mower blade(s) and thrown debris will cause injury or death.**

**HOW TO AVOID THE HAZARD**

- **NEVER remove the grass deflector from the mower because the grass deflector routes material down toward the turf. If the grass deflector is ever damaged, replace it immediately.**
- **Never put your hands or feet under the mower.**
- **Never try to clear discharge area or mower blades unless you move the power take off (PTO) to "OFF" and rotate the ignition key to "OFF." Also remove the key and pull the wire off the spark plug(s).**

1. The mower has a hinged grass deflector that disperses clippings to the side and down toward the turf.

## Operating the Power Take Off (PTO)

The power take off (PTO) engages and disengages power to the electric clutch.

While the ignition key is in the "RUN" or "LIGHTS" positions and the power take off (PTO) is engaged "ON", the PTO light, in the Indicator Module, will be "ON". When this light is "ON" it is a reminder; the starter will not crank and to turn the off PTO before getting off.

### Engaging the Power Take Off (PTO)

1. Depress the brake and/or clutch pedal(s) to stop the machine.
2. Pull the power take off (PTO) to "ON" (Fig. 14).

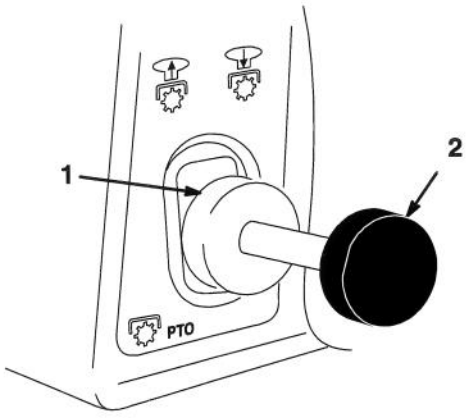


**Figure 14**

1. Off-Disengaged
2. On-Engaged

### Disengaging the Power Take Off (PTO)

1. Depress the brake and/or clutch pedal(s) to stop the machine.
2. Push the power take off (PTO) to "OFF" (Fig.14).

# Attachment Lift Lever

The attachment lift lever (Fig. 15) is used to raise and lower various attachments.

## Raising Attachments

1. Depress the brake pedal to stop the machine.
2. Pull attachment lift lever rearward until latch locks. In this position the lift will hold the attachment in the up, or raised position.

## Lowering Attachments

1. Depress the brake and/or clutch pedal(s) to stop the machine.
2. Pull attachment lift lever rearward, to release lift pressure, and push the button on top to release the latch. Move lift lever forword to lower attachment.

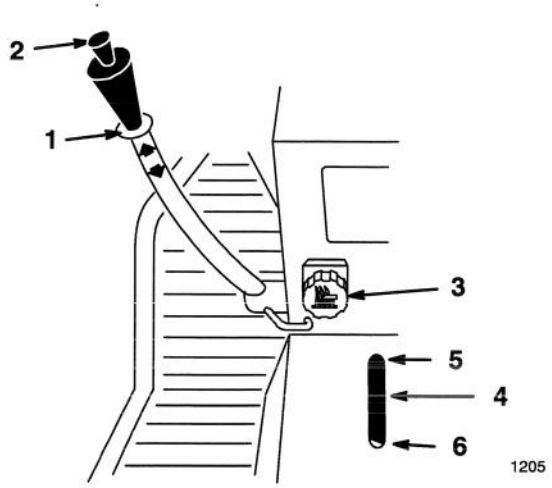


**Figure 15**

1. Lift lever
2. Button
3. Dial-A-Height
4. Indicator
5. High
6. Mounting position

# Attachment Power Lift

The attachment power lift (optional on some models) (Fig. 16) is used to raise and lower attachments.

## Raising Attachments

1. Turn key to the "ON" or "RUN" position (Fig. 16).
2. Push the lift switch in the "UP" direction to raise the attachment lift (Fig. 16). This will lift and hold the attachment in the up, or raised position.

## Lowering Attachments

1. Turn key to the "ON" or "RUN" position (Fig. 16).
2. Push the lift switch in the "DOWN" direction to lower the attachment lift (Fig. 16). This will lower the attachment lift.

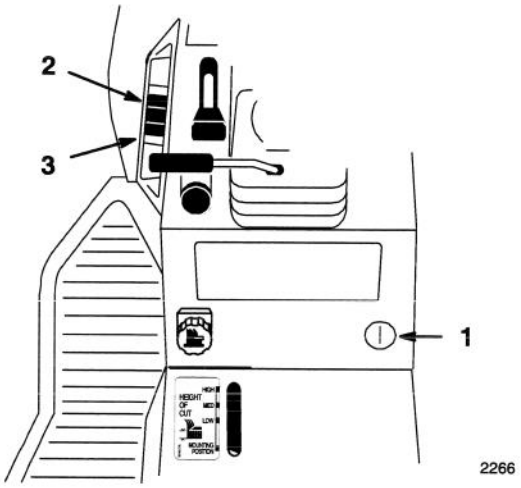


**Figure 16**

1. Key
2. Lift switch UP
3. Lift switch DOWN

## Adjusting Dial-A-Height

The Dial-A-Height control (Fig. 15) is used to limit the downward travel of the attachment. The Dial-A-Height knob is rotated to change the location of this stop, up or down.

1. Raise the attachment lift lever: Refer to Raising Attachments. In the raised, position the Dial-A-Height knob (Fig. 15) can be rotated to change the stop location. Turn clockwise to raise and counterclockwise to lower the height of the attachment.

2. The Dial-A-Height indicator (Fig. 15) will show the change, high to low, in attachment lift height as adjustment is made.

# Tips for Mowing Grass

## Fast Throttle Setting

For best mowing and maximum air circulation, operate the engine at "FAST." Air is required to thoroughly cut grass clippings, so do not set the height-of-cut so low, as to totally surround the mower by uncut grass. Always try to have one side of the mower free from uncut grass, which allows air to be drawn into the mower.

## Cutting a Lawn for the First Time

Cut grass slightly longer than normal to ensure the cutting height of the mower does not scalp any uneven ground. However, the cutting height used in the past is generally the best one to use. When cutting grass longer than six inches tall, you may want to cut the lawn twice to assure an acceptable quality-of-cut.

## Cut 1/3 of the Grass Blade

It is best to cut only about 1/3 of the grass blade. Cutting more than that is not recommended, unless grass is sparse or it is late fall when grass grows more slowly.

## Mowing Direction

Alternate mowing direction to keep the grass standing straight. This also helps disperse clippings which enhances decomposition and fertilization.

## Mow at Correct Intervals

Normally, mow every 4 days. But remember, grass grows at different rates at different times. So to maintain the same cutting height, which is a good practice, mow more often in early spring. As the grass growth rate slows in mid summer, mow less frequently. If you cannot mow for an extended period, first mow at a high cutting height; then mow again 2 days later at a lower height setting.

## Cutting Speed

To improve cut quality, use slower ground speed.

## Avoid Cutting Too Low

If the cutting width of the mower is wider than the mower you previously used, raise the cutting height to ensure uneven turf is not cut too short.

## Long Grass

If the grass is ever allowed to grow slightly longer than normal, or if it contains a high degree of moisture, raise the cutting height higher than usual and cut the grass at this setting. Then cut the grass again using the lower, normal setting.

## When Stopping

If the machine's forward motion must be stopped while mowing, a clump of grass clippings may drop onto your lawn. To avoid this:

1. With the blade(s) "ENGAGED," move onto a previously cut area.
2. To disperse the clippings evenly, raise the mower one or two height-of-cut settings while driving forward with the blade(s) "ENGAGED."

## Keep the Underside of the Mower Clean

Clean clippings and dirt from the underside of the mower after each use. If grass and dirt build up inside the mower, cutting quality will eventually become unsatisfactory.

## Blade Maintenance

Maintain a sharp blade throughout the cutting season because a sharp blade cuts cleanly without tearing or shredding the grass blades. Tearing and shredding turns grass brown at the edges, which slows growth and increases the chance of disease. Every 30 days, check the cutter blade(s) for sharpness and file down any nicks.

# Maintenance

## Service Interval Chart

| Service Operation | Each Use | 5 Hours | 25 Hours | Storage Service | Spring Service | Notes |
|---|---|---|---|---|---|---|
| Cutter Blade—check | | X | X | X | | |
| Grease–Mower deck | | | X | X | | |
| Belts—check for wear/cracks | | | | X | | |
| Mower Housing—clean | X | X | | X | | |
| Chipped Surfaces—paint | | | | X | | |
| Tires—check pressure | | | X | X | X | |

**⚠ CAUTION**

**POTENTIAL HAZARD**

- **If you leave the key in the ignition switch, someone could start the engine.**

**WHAT CAN HAPPEN**

- **Accidental starting of the engine could seriously injure you or other bystanders.**

**HOW TO AVOID THE HAZARD**

- **Remove the key from the ignition switch and pull the wire off the spark plug before you do any maintenance. Also push the wire aside so it does not accidentally contact the spark plug.**

# Cutting Blade

To assure a superior quality of cut, keep the blade(s) sharp. For convenient sharpening and replacement, you may want to have an extra blade(s).

**⚠ WARNING**

**POTENTIAL HAZARD**

- **A blade that is worn or damaged could break apart and pieces could be thrown at bystanders or at you as you use the mower.**

**WHAT CAN HAPPEN**

- **Pieces of blade that may be thrown could seriously injure or kill you or bystanders.**

**HOW TO AVOID THE HAZARD**

- **Periodically inspect the blade for wear and damage. Immediately install a new blade if it is worn or damaged.**

## Inspecting the Blade(s)

1. Remove the mower; refer to Removing the Mower, page 10.
2. Inspect the cutting edges (Fig. 17). If the edges are not sharp or have nicks, remove the blade(s) and sharpen them; refer to Sharpening the Blade(s), page 17.
3. Inspect the blade(s), especially the curved area (Fig. 17). If you notice any damage, wear, or a slot forming in this area (Fig. 17), immediately install a new blade.

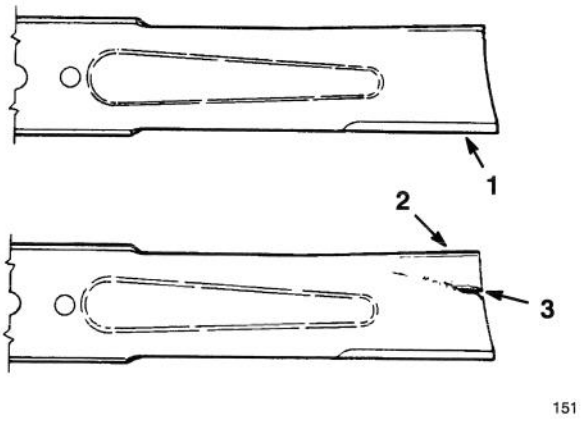


**Figure 17**

1. Cutting edge
2. Curved area
3. Wear/slot forming

## Removing the Blade

1. Remove the mower; refer to Removing the Mower, page 10.
2. Carefully tip the mower over.
3. Remove the nut, flat washer, blade, and washer (Fig. 18). A block of wood may be wedged between the blade and the mower to lock the blade when you are removing the bolt.
4. Inspect all parts. If a defect or damage is noticed, install new parts.

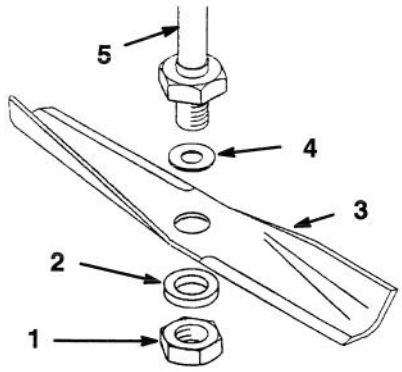


**Figure 18**

1. Nut
2. Flat washer (thick)
3. Blade
4. Washer (thin)
5. Spindle

## Sharpening the Blade(s)

1. Use a file to sharpen the cutting edge at both ends of the blade (Fig. 19). Maintain the original angle. The blade retains its balance if the same amount of material is removed from both cutting edges.

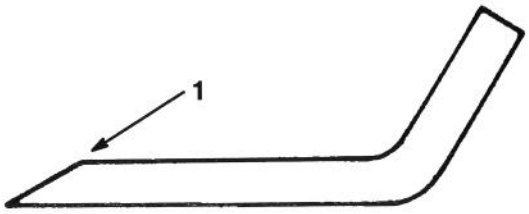


**Figure 19**

1. Sharpen at original angle

2. Check the balance of the blade by putting it on a blade balancer (Fig. 20). If the blade stays in a horizontal position, the blade is balanced and can be used. If the blade is not balanced, file some metal off the back side of the blade. Repeat this procedure until the blade is balanced.

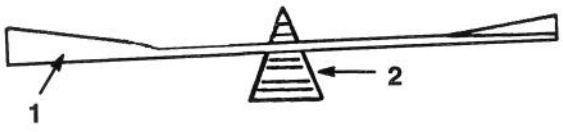


**Figure 20**

1. Blade
2. Balancer

## Installing the Blade(s)

1. Install the washer, blade, flat washer, and the blade nut (Fig. 21).

   **IMPORTANT: The curved part of the blade must be pointing toward the inside of the mower to assure proper cutting.**

2. Tighten the blade nut to 80-100 ft–lb (109-136 Nm).

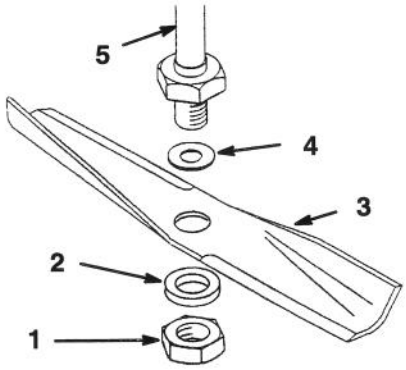


**Figure 21**

1. Nut
2. Flat washer (thick)
3. Blade
4. Washer (thin)
5. Spindle

# Greasing and Lubrication

## Service Interval/Specification

Grease the machine after every 25 operating hours or once a year, whichever occurs first. Grease more frequently when operating conditions are extremely dusty or sandy.

Grease Type: General-purpose grease.

## How to Grease

1. Disengage the power take off (PTO), set the parking brake, and turn the ignition key to "OFF" to stop the engine. Remove the key
2. Clean the grease fittings with a rag. Make sure to scrape any paint off the front of the fitting(s).
3. Connect a grease gun to the fitting. Pump grease into the fittings.
4. Wipe up any excess grease.

## Where to Add Grease

1. Lubricate the blade spindles, idler pulley arm and gage wheel bearings (Fig. 22).

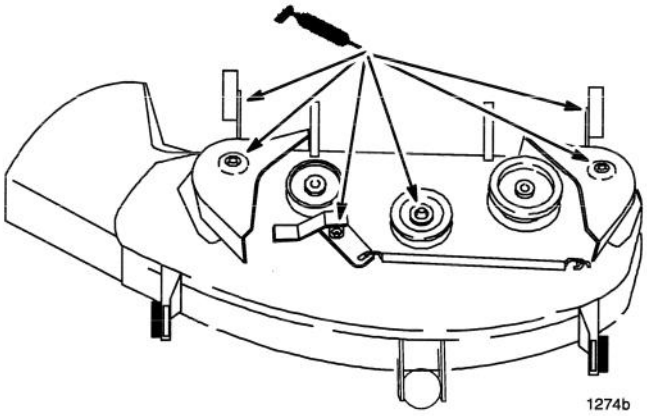


**Figure 22**

# Blade Drive Belt

## Removing the Blade Drive Belt

1. Remove the mower; refer to Removing the Mower, page 10.
2. Remove the pulley cover mounting screws and pulley covers from blade pulleys (Fig. 23).
3. Remove the belt from the pulleys (Fig. 23).

## Installing the Blade Drive Belt

1. Install the new belt around the blade pulleys and the idler pulley.
2. Install the left and right pulley covers with the mounting screws (Fig. 23).
3. Install the mower; refer to Installing the Mower, page 6.

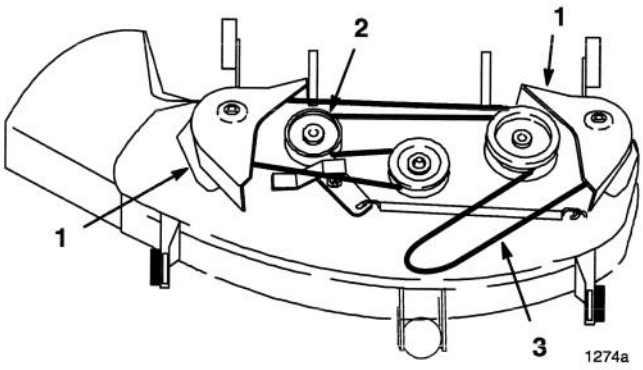


**Figure 23**

Top View

1. Pulley cover
2. Idler pulley
3. Mower belt

## Storage

1. Clean dirt and chaff from the outside of the engine's cylinder head fins and blower housing. Also remove grass clippings, dirt, and grime from the external parts of the entire machine, especially the engine, shrouding, and the top of the mower.

   **IMPORTANT: You can wash the machine with mild detergent and water. Do not pressure wash the machine. Avoid excessive use of water, especially near the control panel, lights, engine, and the battery.**

2. Scrape heavy buildup of grass and dirt from the underside of the mower. Then wash the mower with a garden hose.

3. Check the condition of the blade(s); refer to Cutting Blade, page 16.

4. Check the condition of the blade drive belt.

5. Grease the mower deck; refer to Greasing and Lubrication, page 18.

6. Check and tighten all bolts, nuts, and screws. Repair or replace any part that is damaged or defective.

7. Paint all scratched or bare metal surfaces. Paint is available from your Authorized Service Dealer.

8. Store the machine in a clean, dry garage or storage area. Remove the key from the ignition switch and keep it in a memorable place. Cover the machine to protect it and keep it clean.

# Troubleshooting

| PROBLEM | POSSIBLE CAUSES | CORRECTIVE ACTION |
|---|---|---|
| Abnormal vibration. | 1. Cutting blade(s) is bent or unbalanced. | 1. Install new cutting blade(s). |
| | 2. Blade mounting bolt is loose. | 2. Tighten blade mounting bolt. |
| | 3. Engine mounting bolts are loose. | 3. Tighten engine mounting bolts. |
| | 4. Loose engine pulley, idler pulley, or blade pulley. | 4. Tighten the appropriate pulley. |
| | 5. Engine pulley is damaged. | 5. Contact Authorized Service Dealer. |
| Blade(s) does not rotate. | 1. Blade drive belt is worn, loose or broken. | 1. Install new blade drive belt. |
| | 2. Blade drive belt is off pulley. | 2. Install blade drive belt and check idler pulley and belt guides for correct position. |
| Uneven cutting height. | 1. Tire pressure is incorrect. | 1. Set tire pressure. |
| | 2. Mower is not level. | 2. Level mower from side-to-side and front-to-rear. |
| | 3. Underside of mower is dirty. | 3. Clean the underside of the mower. |