Form No. 3398-915 Rev A

Count on it.

Parts Catalog

TimeCutter® SS 4225 Riding Mower

Model No. 74721—Serial No. 316000001 and Up

Register at www.Toro.com.
Original Instructions (EN)

3398-915 A

Ordering Replacement Parts

To order replacement parts, please supply the part number, the quantity, and the description of each part desired.

Understanding Reference Numbers

Each identified part in an illustration has a reference number. The reference number for a part also appears in the parts list, along with other information about the part.

This catalog uses two special reference number formats, one to indicate parts in a service assembly and another to indicate the quantity of a given part in an illustration.

Service Assembly Reference Numbers

Parts in service assemblies have reference numbers in the form a:b. The a represents the reference number of the entire service assembly and the b represents a sequential number unique to each part within the service assembly.

For example, a wheel assembly might be identified by reference number 6, the tire by 6:1, the valve by 6:2, and the wheel by 6:3. When you order the assembly identified by reference number 6, you receive all parts identified by reference numbers 6:1,6:2, and 6:3. However, you may also order any part individually. Reference numbers of this type appear in illustration and in parts lists.

Reference Numbers Indicating Quantity

In an illustration, if a reference number indicates more than one part, the reference number has the form nX y. The n represents the quantity of the part, the X is the multiplication symbol, and the y represents the reference number.

For example, in an illustration, the reference number 2X 37 means that two of the parts identified by reference number 37 are indicated.

List of Abbreviations

AR: as required

ASM: assembly

BBC: blade brake control

BHTF: button head thread forming

CARR: carriage

CCW: counter clockwise

CW: clockwise

DEG: degrees

DPA: Dual Point Adjustment

ECM: electronic control module

EXT: external

FH: flat head

GA: gauge

HD: heavy-duty

HF: hex flange

HH: hex head

HHF: hex head flange

HHFTF: hex head flange thread forming

HJ: hex jam

HLH: hex lag head

HOC: height-of-cut

HP: high pressure

HSBH: hex socket button head

HSFH: hex socket flat head

HSH: hex socket head

HWH: hex washer head

HWHTF: hex washer head thread forming

HYD: hydraulic

LH: left hand

LP: low pressure

LPG: Liquefied Petroleum Gas

NI: nylon insert

NPTF: national pipe thread fine

PFH: phillips flat head

PPH: phillips pan head

PPHTF: phillips pan head thread forming

PRH: phillips round head

PTH: phillips truss head

PTO: power-take-off

RH: right hand

ROPS: roll-over protection system

RRB: rear roller brush

SFH: slotted fillister head

SHH: slotted hex head

SHWH: slotted hex washer head

SPH: slotted pan head

SQH: square head

SRH: slotted round head

STD: standard

TAP: self tapping

TTH: torx truss head

Contents

Frame, Front Axle and Caster Wheel Assembly 4
Caster Wheel Assembly No. 130-0736. 6
Deck Lift Assembly. 8
Motion Control Assembly 10
Brake Assemby. 12
Seat Assembly 14
Belt and Idler Assembly. 16
Hydo Transaxle Drive and Rear Wheel Assembly. 18
2 Ply Wheel and Tire Assembly No. 131-3671 20
Left Hand Hydro Transaxle Assembly No. 119-3330 22
Right Hand Hydro Transaxle Assembly No. 119-3331 24
Clutch Assembly. 26
Engine and Muffler Assembly. 28
Body Styling and Fuel Tank Assembly 30
Fuel Delivery Assembly. 32
Battery and Electrical Assembly. 34
Fuse and Wire Harness Assembly. 36
42 Inch Deck Assembly. 38
42 Inch Deck Assembly No. 131-3604 40
42 Inch Deck, Belt and Blade Assembly 42
Attachments and Accessories 44

© 2015—The Toro® Company
8111 Lyndale Avenue South
Bloomington, MN 55420

Contact us at www.Toro.com.
Printed in the USA.
All Rights Reserved

Frame, Front Axle and Caster Wheel Assembly

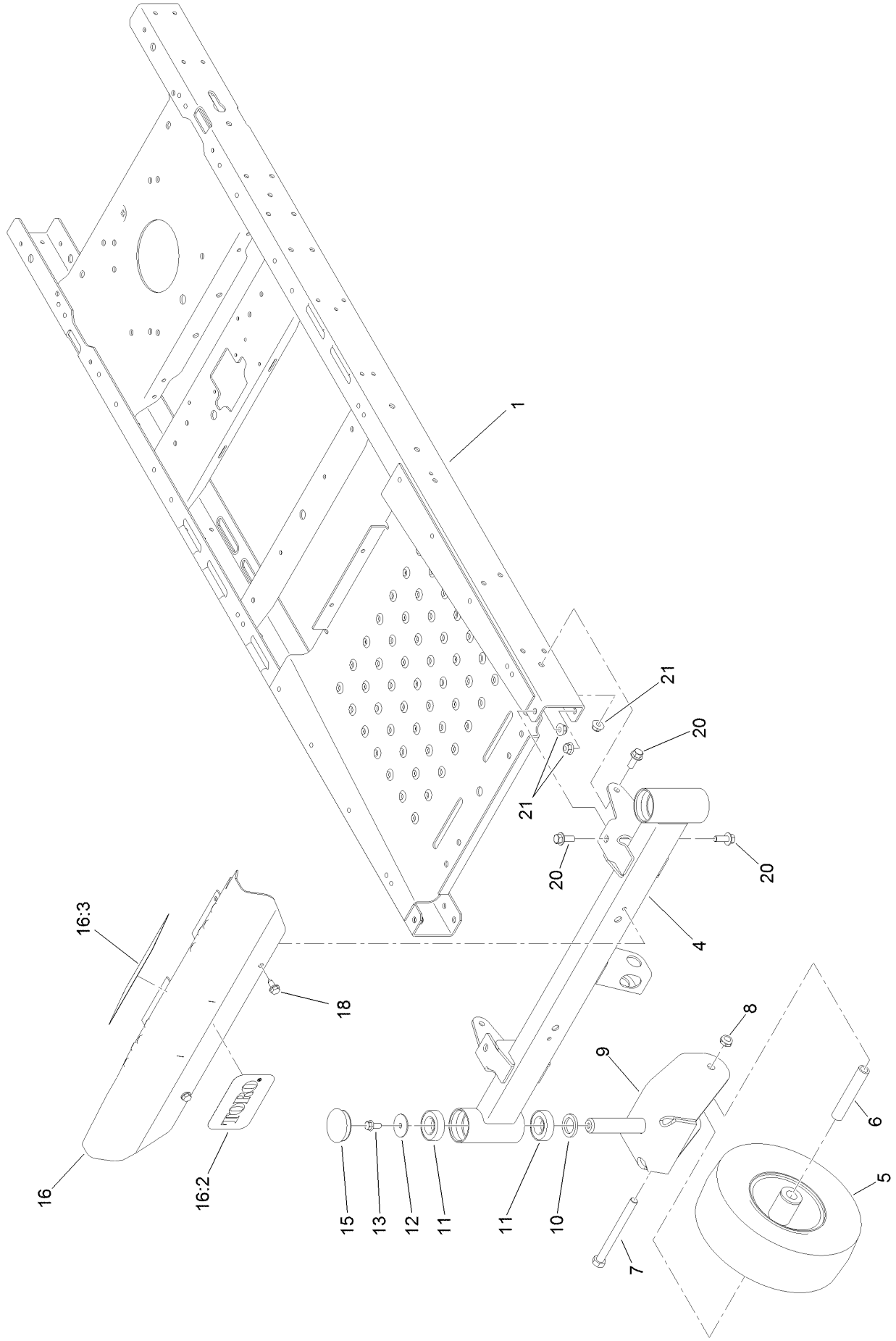

Frame, Front Axle and Caster Wheel Assembly (continued)

Ref.	Part Number	Qty.	Description
1	127-3444-01	1	Frame ASM
4	125-1742-01	1	Axle-Front, Narrow
5	130-0736	2	Caster Wheel ASM
6	104-3667	2	Spanner-Wheel
7	325-22	2	Screw-HH
8	3296-45	2	Nut-Lock, NI
9	120-2266-01	2	Fork-Caster
10	117-7394	2	Washer-Thrust
11	109-3678	4	Bearing-Ball
12	3256-68	2	Washer-Flat
13	3234-47	2	Screw-HHF
15	116-4348	2	Cap-Grease
16	132-0890	1	Footrest ASM
16:2	105-8278	1	Decal
16:3	132-0869	1	Decal-Danger
18	32144-70	2	Screw-HWHTF
20	3234-42	6	Screw-HHF
21	104-8301	6	Nut-Flange, NI

Caster Wheel Assembly No. 130-0736

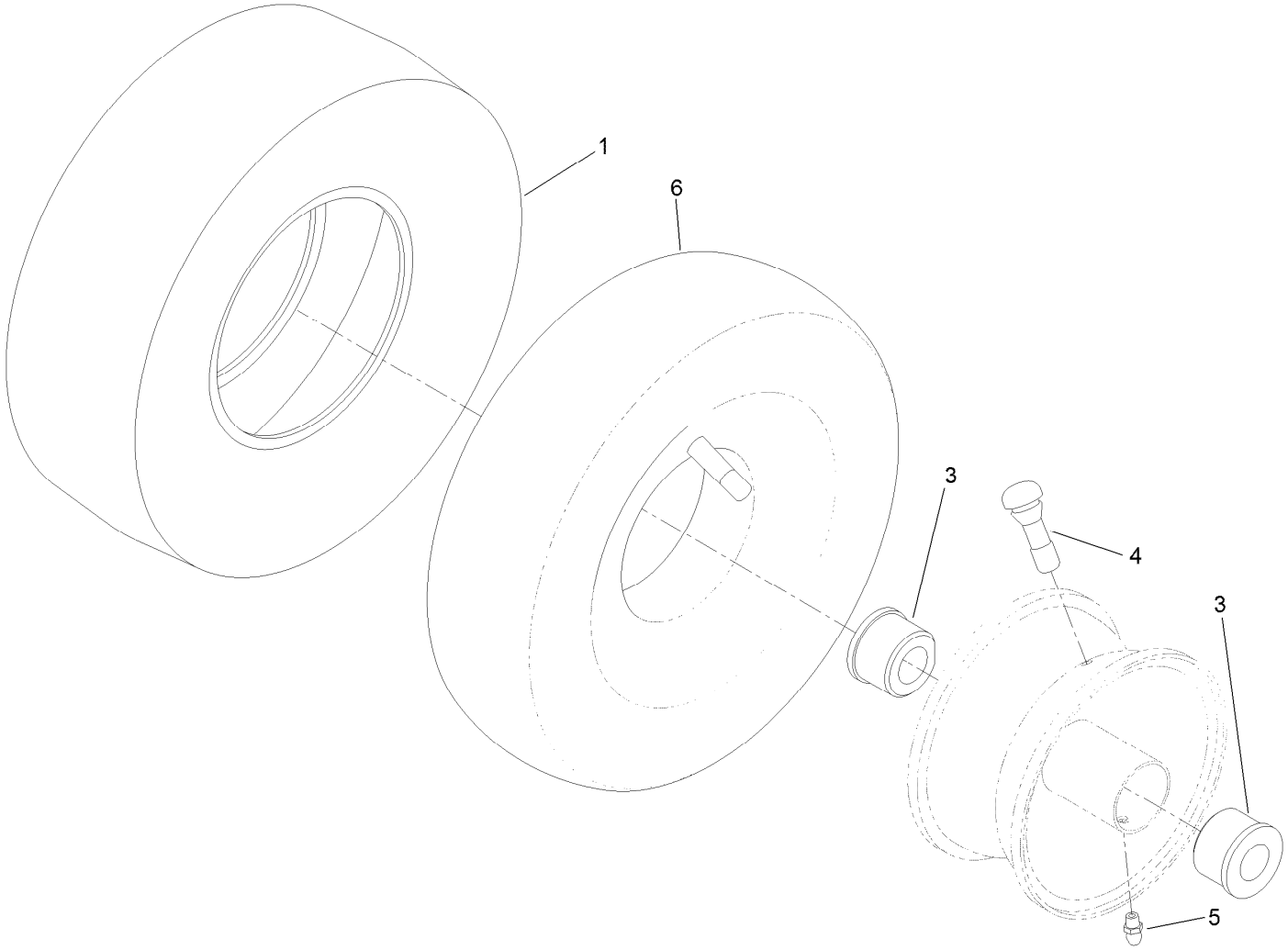

Caster Wheel Assembly No. 130-0736 (continued)

Ref.	Part Number	Qty.	Description
1	130-0735	1	Tire
3	114-1640	2	Bushing-Flange
4	232-27	1	Stem-Valve
5	302-5	1	Fitting-Grease
6	105-0844	1	Tube-Inner ●

● Optional Equipment

Deck Lift Assembly

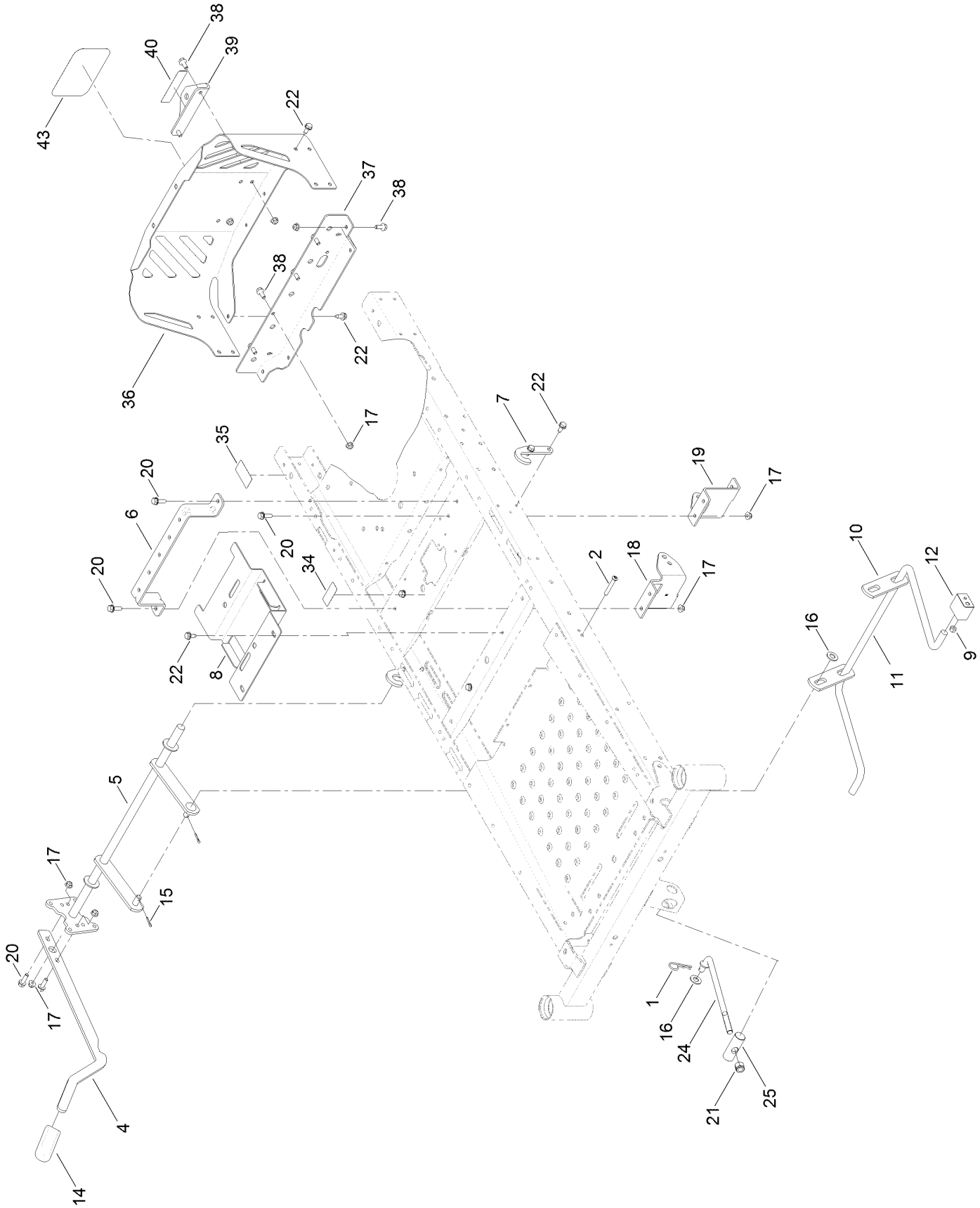

Deck Lift Assembly (continued)

Ref.	Part Number	Qty.	Description
1	1-806005	1	Pin-Cotter
2	120-5499	2	Screw-HSBH
4	119-3427-03	1	Lever-Lift
5	132-6872-03	1	Lift-Deck, Narrow
6	119-3435-03	1	Brace-Seat, Rear (Narrow)
7	119-8875	2	Bracket-Lift
8	131-0914-03	1	Bracket-Battery
9	3296-29	2	Nut-Lock, NI
10	108-7840	2	Link-Lift
11	108-7839	1	Arm-Lift, Rear
12	108-7845	2	Block-Pivot
14	1-633268	1	Grip-Lever
15	3272-11	2	Pin-Cotter
16	3256-26	3	Washer-Flat
17	104-8300	14	Nut-Flange, NI
18	131-0901-01	1	Mount-Hydro, Front Right
19	131-0902-01	1	Mount-Hydro, Front Left
20	3234-29	6	Screw-HHF
21	3296-19	1	Nut-Hex
22	32144-70	16	Screw-HWHTF
24	131-3945	1	Rod-Mount, Deck
25	119-8810	1	Pin-Pivot
34	121-5684	1	Decal-Location, Service Dealer
35	121-2989	2	Decal-Bypass
36	127-3353-03	1	Guard-Engine, Narrow
37	130-6950-01	1	Crossmember-Rear, Narrow
38	3234-47	8	Screw-HHF
39	117-1232-03	1	Bracket-Hitch
40	131-4036	1	Decal
43	99-4693	1	Decal

Motion Control Assembly

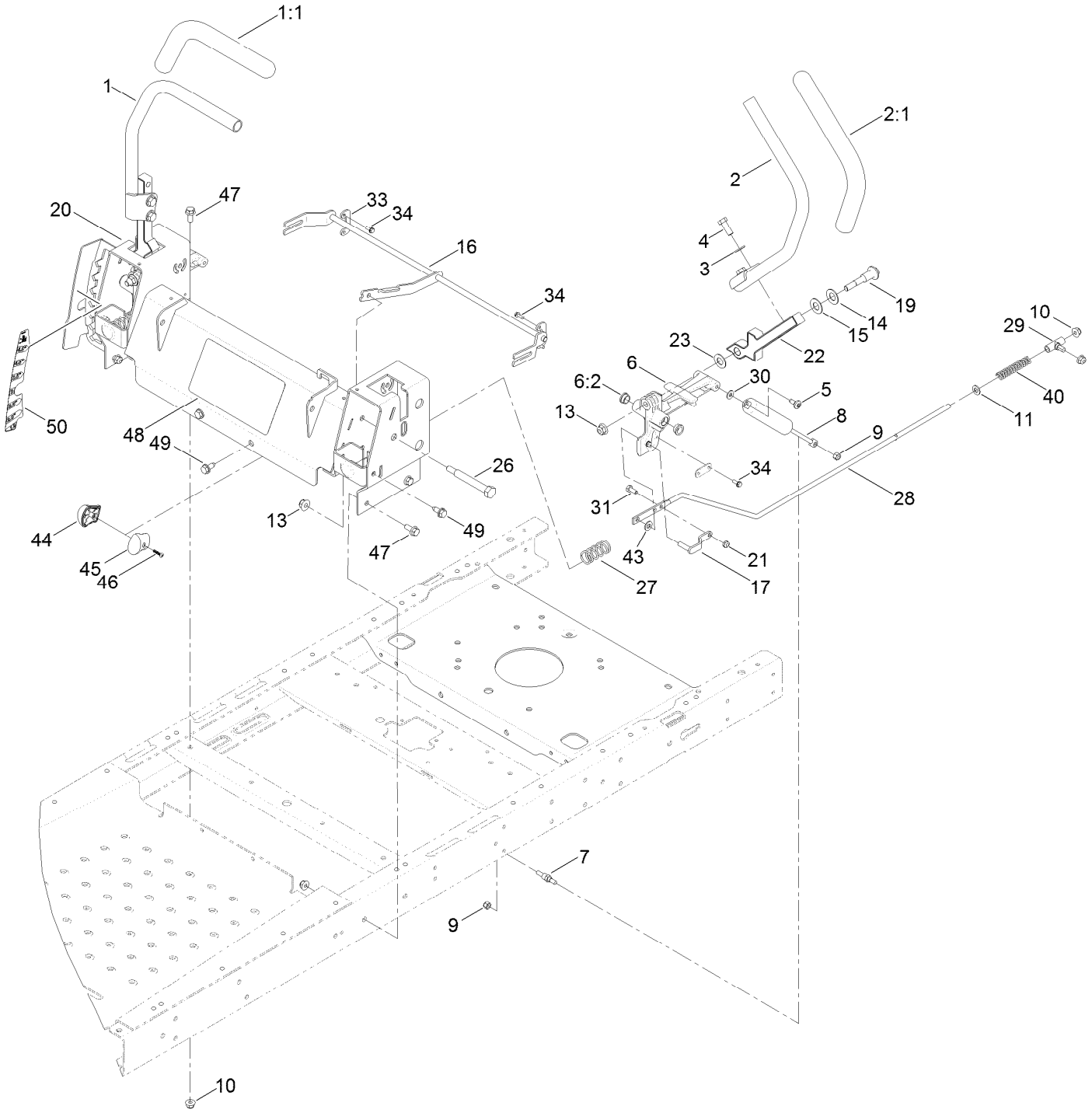

Motion Control Assembly (continued)

Ref.	Part Number	Qty.	Description
1	121-0731	1	Handle-Control, RH
1:1	121-0726	1	Grip
2	121-0730	1	Handle-Control, LH
2:1	121-0726	1	Grip
3	3256-24	4	Washer-Flat
4	323-6	4	Screw-HH
5	120-7950	2	Screw-Shoulder
6	119-3470	2	Actuator Arm ASM
6:2	256-156	2	Bushing-Flange
7	110-6810	2	Stud-Damper
8	103-2913	2	Damper-Control, Motion
9	3296-42	4	Nut-Lock, NI
10	104-8300	10	Nut-Flange, NI
11	3256-23	2	Washer-Flat
13	104-8301	4	Nut-Flange, NI
14	119-8925	2	Washer-Belleville
15	117-1240	2	Washer
16	131-1094	1	Speed Control ASM
17	119-3303	2	Pin-Rod, Hydro
19	117-1198	2	Bolt-Pivot
20	131-1093-03	1	Control Box ASM

Ref.	Part Number	Qty.	Description
21	3296-56	2	Nut-Lock, NI
22	115-5098-05	2	Lever-Control
23	120-2273	2	Washer-Nylon
26	115-5099	2	Bolt-Pivot
27	119-8876	2	Spring-Return
28	117-5388	2	Rod-Hydro
29	119-8842	2	Mount-Rod, Hydro
30	119-8952	2	Washer
31	321-3	2	Screw-HH
33	117-5385	2	Retainer
34	32144-1	4	Screw-Taptite
40	1-603807	2	Spring-Return, Neutral
43	93-6079	2	Spacer-Nylon
44	119-8935	1	Knob-RH
45	119-8936	1	Knob-LH
46	94-4496	1	Screw-PPH
47	3234-47	6	Screw-HHF
48	131-3947	1	Decal-Speed Control
49	32144-70	4	Screw-HWHTF
50	119-8871	1	Decal

Brake Assemby

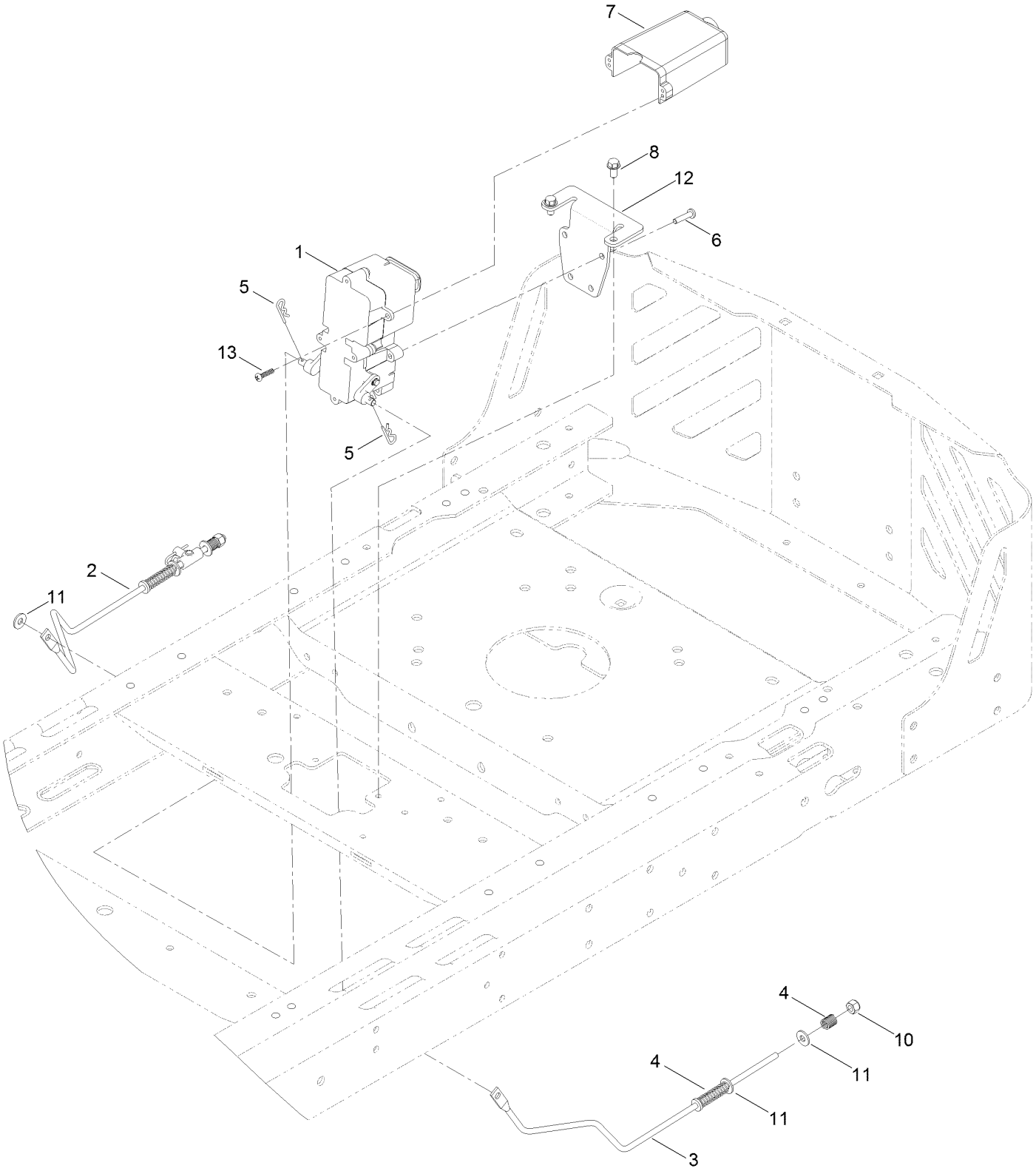

Brake Assemby (continued)

Ref.	Part Number	Qty.	Description
1	132-0935	1	Brake Box ASM
2	121-2974	1	Rod-Brake, RH
3	121-2975	1	Rod-Brake, LH
4	117-1169	4	Spring-Compression
5	3290-307	2	Pin-Cotter
6	32144-36	4	Screw-PPH
7	130-6974	1	Cover-Connector
8	32144-4	2	Screw-HWH
10	3296-42	2	Nut-Lock, NI
11	119-8952	6	Washer
12	130-0790-03	1	Bracket-Mount, Brake
13	94-4496	2	Screw-PPH

Seat Assembly

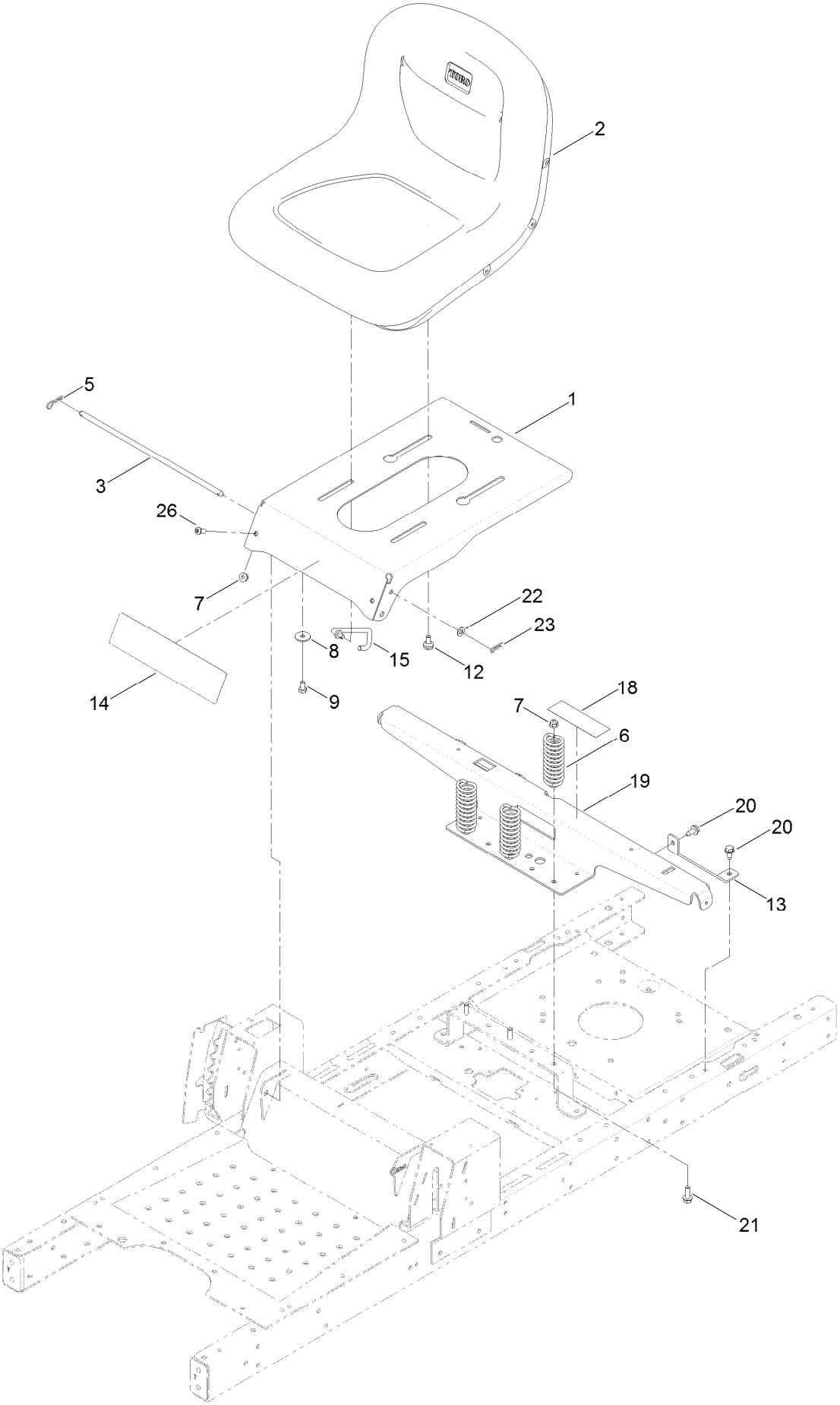

Seat Assembly (continued)

Ref.	Part Number	Qty.	Description
1	131-4037-01	1	Pan-Seat
2	119-8828	1	Seat-15 Inch
3	119-3433	1	Rod-Pivot, Narrow
5	3290-250	2	Pin-Cotter
6	92-7054	3	Spring-Compression
7	104-8300	5	Nut-Flange, NI
8	5-4460	2	Washer-Pivot
9	322-2	2	Screw-HH
12	37-8771	2	Bolt-Shoulder
13	119-3431-03	2	Support-Tank, Rear
14	131-3650	1	Decal-Timecutter
15	119-8972	1	Stop-Seat
18	106-8717	1	Decal-Service
19	131-1040-03	1	Support-Pod
20	32144-70	4	Screw-HWHTF
21	3234-29	3	Screw-HHF
22	3256-23	1	Washer-Flat
23	3290-307	1	Pin-Cotter
26	3274-55	2	Screw-HSBH

Belt and Idler Assembly

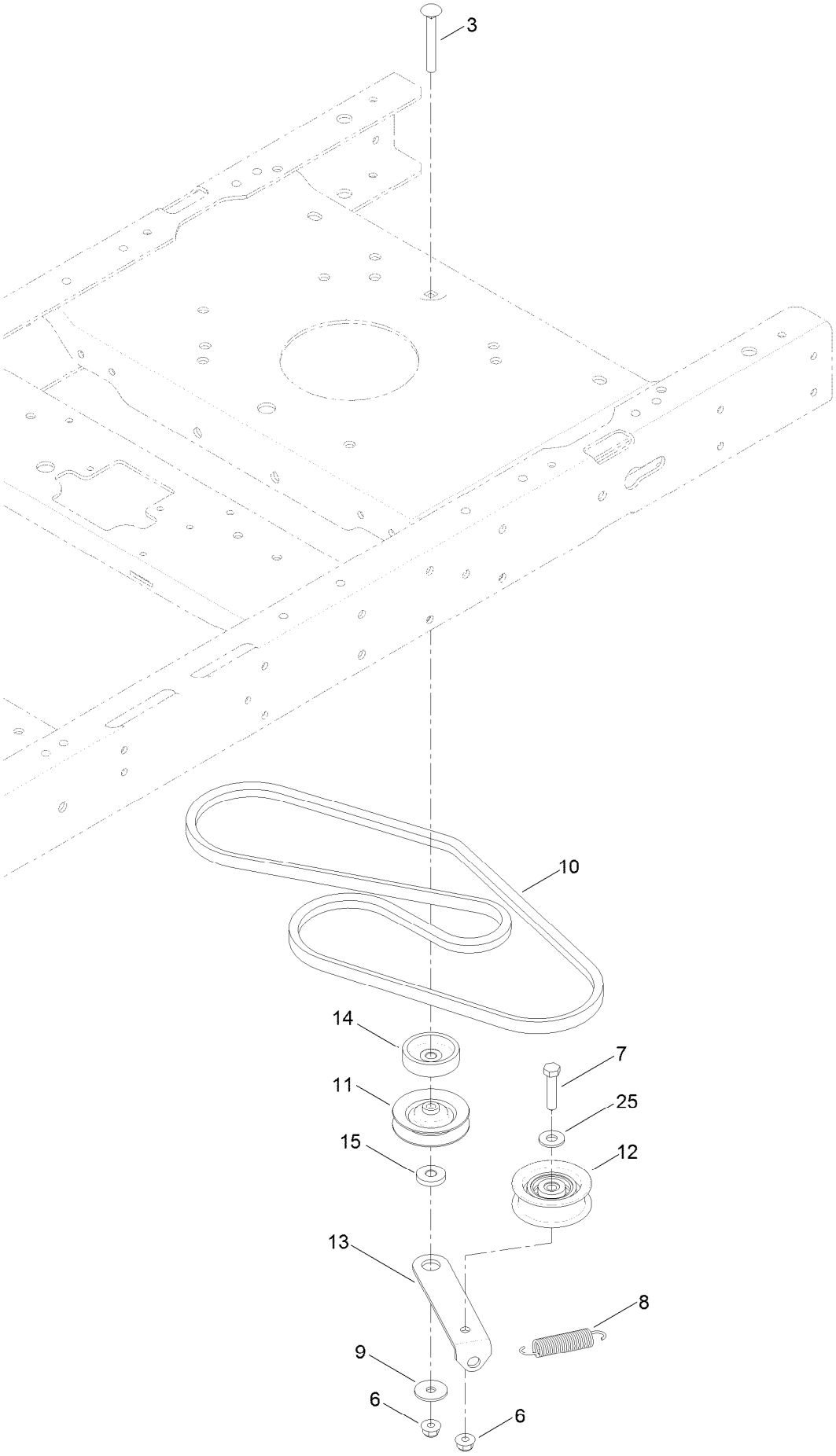

Belt and Idler Assembly (continued)

Ref.	Part Number	Qty.	Description
3	3230-8	1	Screw-CARR
6	104-8300	2	Nut-Flange, NI
7	322-7	1	Screw-HH
8	104-6415	1	Spring-Return, Pedal
9	5-4460	1	Washer-Pivot
10	130-6975	1	V-Belt
11	119-8822	1	Pulley-Idler
12	106-2176	1	Pulley-Idler
13	119-3326	1	Arm-Idler
14	119-3353	1	Spacer
15	119-3327	1	Spacer-Arm, Idler
25	3256-3	1	Washer-Flat

Hydo Transaxle Drive and Rear Wheel Assembly

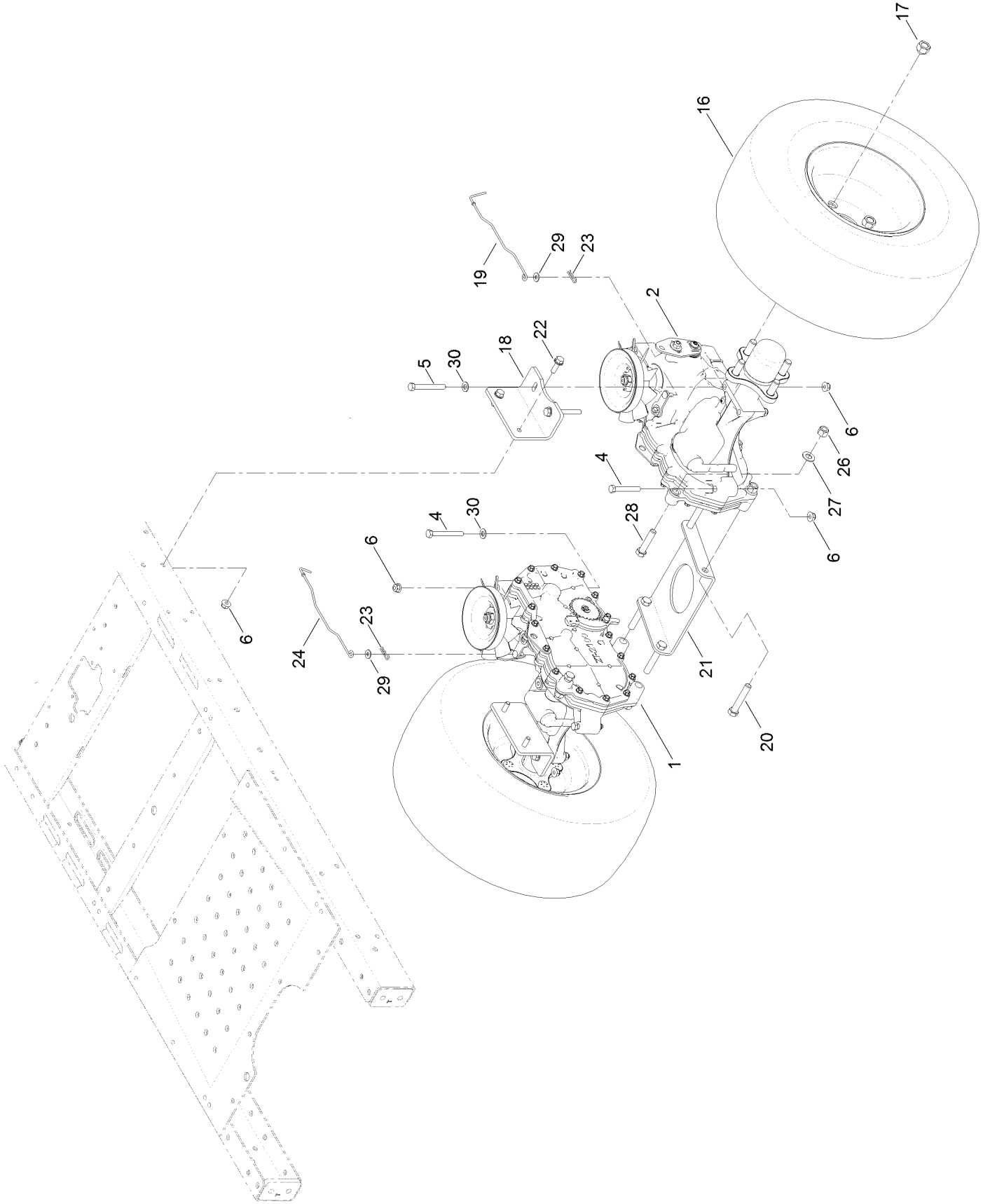

Hydo Transaxle Drive and Rear Wheel Assembly (continued)

Ref.	Part Number	Qty.	Description
1	119-3331	1	RH Hydro Transaxle ASM
2	119-3330	1	LH Hydro Transaxle ASM
4	322-11	4	Screw-HH
5	322-13	4	Screw-HH
6	104-8300	12	Nut-Flange, NI
16	131-3671	2	2 Ply Wheel And Tire ASM
17	242-50	8	Nut-Lug
18	117-7264-03	2	Mount-Hydro
19	131-0900	1	Rod-Bypass, LH
20	324-10	4	Screw-HH

Ref.	Part Number	Qty.	Description
21	119-3339-03	1	Plate-Cross, Hydro
22	3234-29	4	Screw-HHF
23	3290-307	2	Pin-Cotter
24	130-7049	1	Rod-Bypass, RH
26	3296-48	6	Nut-Lock, NI
27	3256-25	6	Washer-Flat
28	324-8	2	Screw-HH
29	119-8952	2	Washer
30	3256-23	6	Washer-Flat

2 Ply Wheel and Tire Assembly No. 131-3671

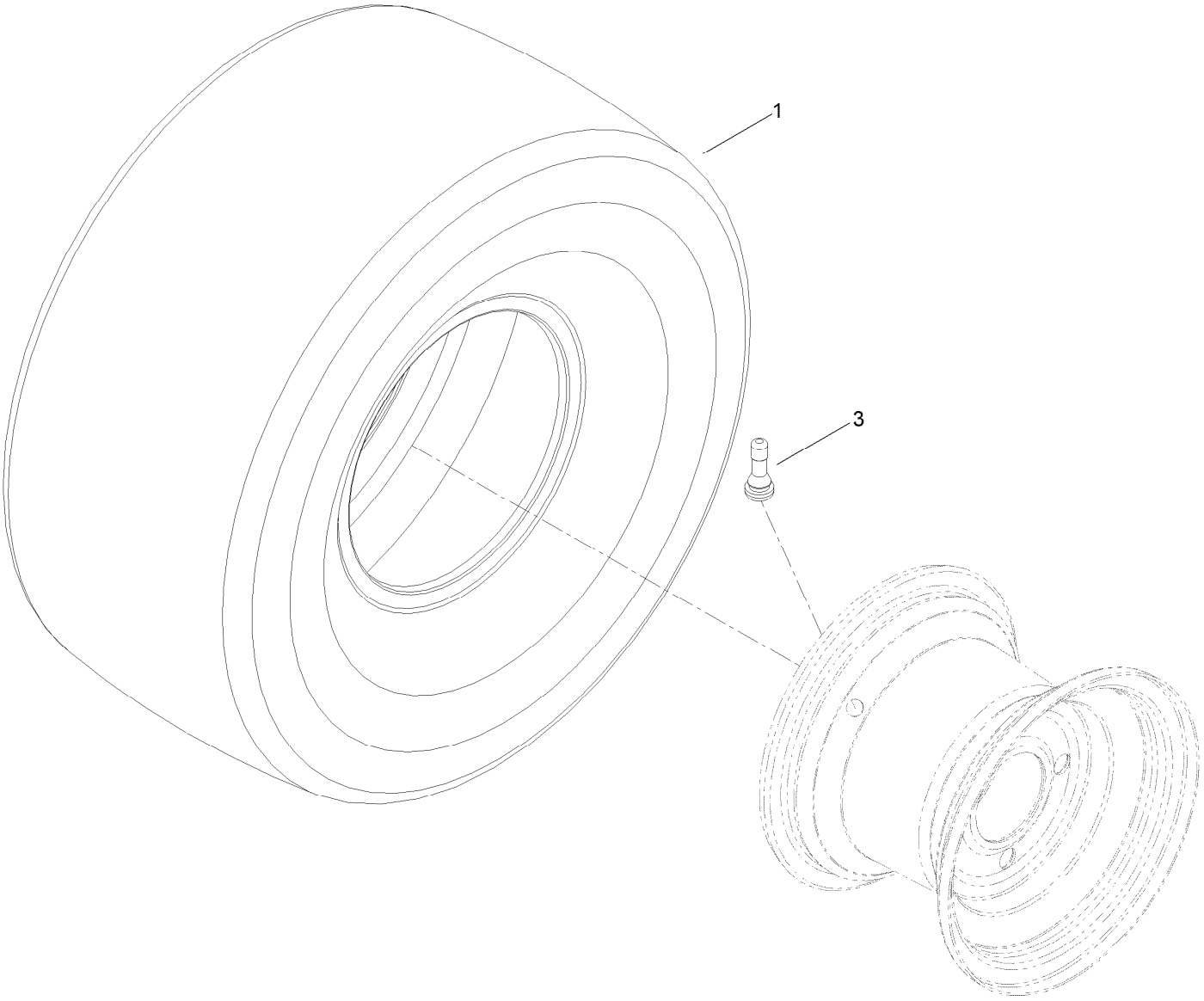

2 Ply Wheel and Tire Assembly No. 131-3671 (continued)

Ref.	Part Number	Qty.	Description
1	131-3678	1	Tire-2 Ply
3	232-27	1	Stem-Valve
99	107-2491	1	Tube-Tire ●

● Not illustrated

Left Hand Hydro Transaxle Assembly No. 119-3330

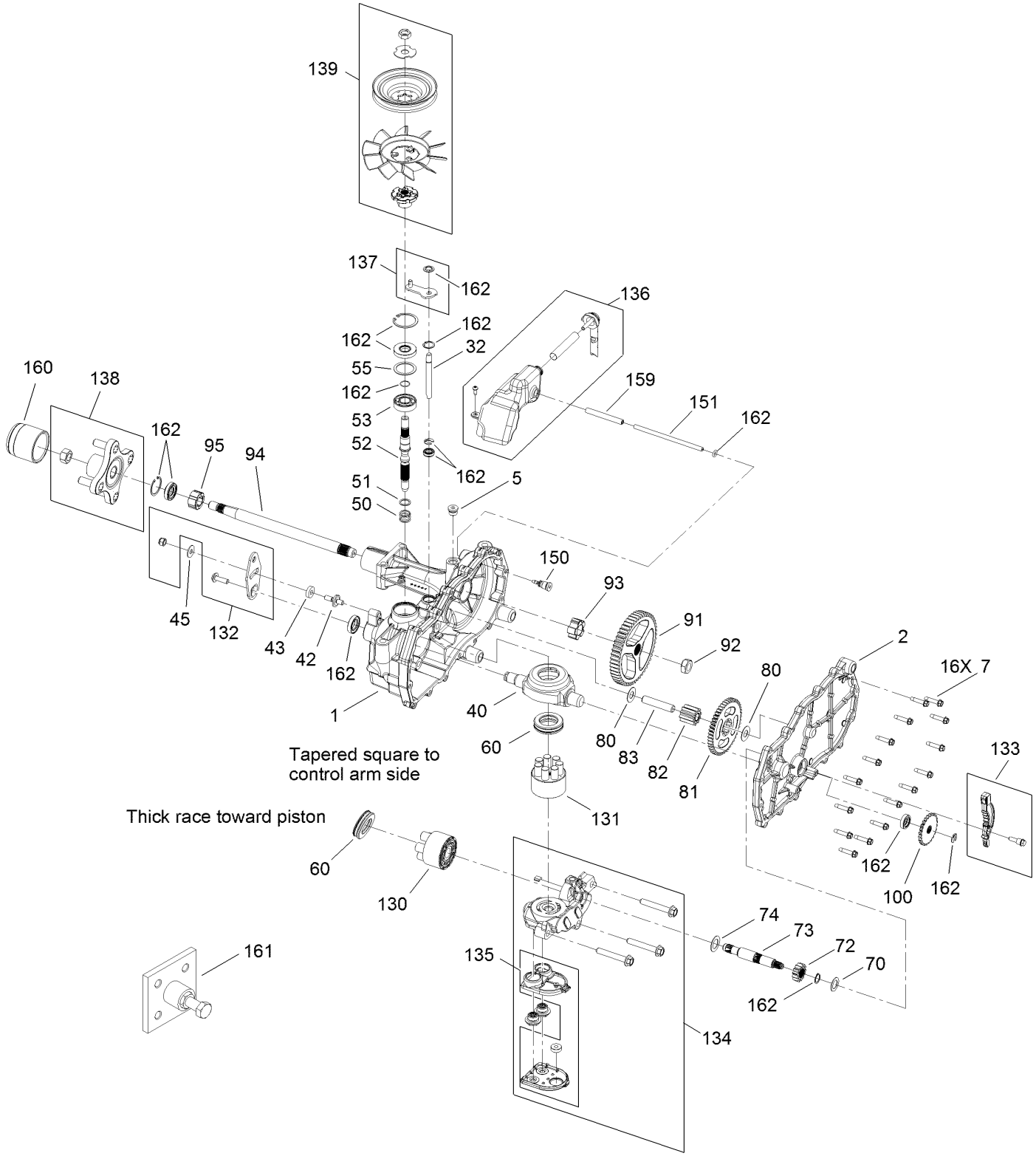

Left Hand Hydro Transaxle Assembly No. 119-3330 (continued)

Ref.	Part Number	Qty.	Description
1	120-5532	1	Main Housing ASM
2	120-5534	1	Housing Side Kit
5	104-2189	1	Plug-Thread, Straight
7	117-5359	16	Screw-HHF
13	104-2147	1	Sealant ●
32	106-8678	2	Rod-Bypass
40	104-5304	1	Swashplate-Trunnion
42	104-2116	1	Stud
43	112-9853	1	Puck-Friction
45	114-8491	1	Washer
50	120-5537	1	Spring-Compression
51	120-5538	1	Washer
52	104-5306	1	Shaft-Input
53	104-5311	1	Bearing-Ball
55	104-5308	1	Spacer
60	94-6922	1	Bearing-Thrust
70	104-5339	1	Washer-Flat
72	104-5316	1	Gear-Pinnion, 13T
73	106-8683	1	Shaft-Motor
74	104-5360	1	Washer
80	119-5541	2	Washer
81	104-5317	1	Gear-10T/48T
82	104-5318	1	Gear-Jackshaft, 10T
83	104-5329	1	Pin-Jackshaft
91	120-5539	1	Gear-Bull
92	104-2142	1	Nut-HJ
93	115-8314	1	Bushing-Inboard
94	120-5540	1	Shaft-Axle
95	120-5541	1	Bearing-Sleeve
100	106-8694	1	Disc-Brake, Cog
130	103-2666	1	Cylinder Block Kit
131	110-8561	1	Pump Block ASM
132	117-5362	1	Arm Control Kit
133	106-8688	1	Brake Arm Kit
134	112-9861	1	Center Section Filter Kit
135	114-1634	1	Filter Kit
136	121-5730	1	RH Expansion Tank Kit
137	120-5549	1	Bypass Kit
138	121-5731	1	Hub Kit
139	121-5729	1	Fan Pulley Kit
150	104-5349	1	Fitting-Sae
151	115-8302	1	Hose
159	121-5728	1	Case-Tube
160	125-0041	1	Cap-Axle
161	114-8467	1	Hub-Puller, 4 Bolt
162	120-7103	1	Seal And Ring Kit

● Not illustrated

Right Hand Hydro Transaxle Assembly No. 119-3331

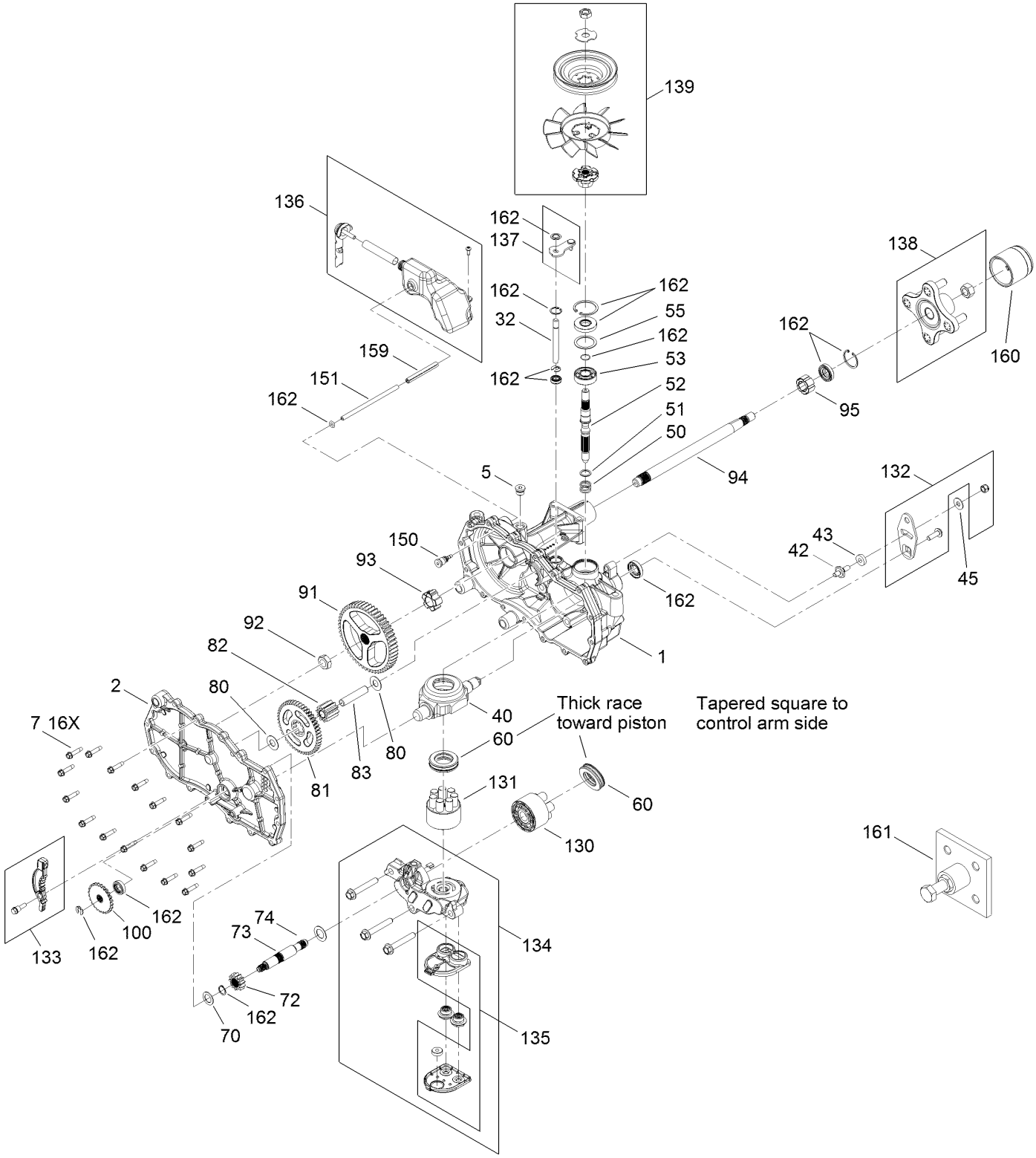

Right Hand Hydro Transaxle Assembly No. 119-3331 (continued)

Ref.	Part Number	Qty.	Description
1	120-5531	1	Main Housing ASM
2	120-5533	1	Housing Side Kit
5	104-2189	1	Plug-Thread, Straight
7	117-5359	16	Screw-HHF
13	104-2147	1	Sealant ●
32	106-8678	2	Rod-Bypass
40	104-5304	1	Swashplate-Trunnion
42	104-2116	1	Stud
43	112-9853	1	Puck-Friction
45	114-8491	1	Washer
50	120-5537	1	Spring-Compression
51	120-5538	1	Washer
52	104-5306	1	Shaft-Input
53	104-5311	1	Bearing-Ball
55	104-5308	1	Spacer
60	94-6922	1	Bearing-Thrust
70	104-5339	1	Washer-Flat
72	104-5316	1	Gear-Pinnion, 13T
73	106-8683	1	Shaft-Motor
74	104-5360	1	Washer
80	119-5541	2	Washer
81	104-5317	1	Gear-10T/48T
82	104-5318	1	Gear-Jackshaft, 10T
83	104-5329	1	Pin-Jackshaft
91	120-5539	1	Gear-Bull
92	104-2142	1	Nut-HJ
93	115-8314	1	Bushing-Inboard
94	120-5540	1	Shaft-Axle
95	120-5541	1	Bearing-Sleeve
100	106-8694	1	Disc-Brake, Cog
130	103-2666	1	Cylinder Block Kit
131	110-8561	1	Pump Block ASM
132	117-5362	1	Arm Control Kit
133	106-8688	1	Brake Arm Kit
134	112-9862	1	Center Section Filter Kit
135	114-1634	1	Filter Kit
136	121-5735	1	LH Expansion Tank Kit
137	107-2489	1	Bypass Arm Kit
138	121-5731	1	Hub Kit
139	121-5729	1	Fan Pulley Kit
150	104-5349	1	Fitting-Sae
151	115-8302	1	Hose
159	121-5728	1	Case-Tube
160	125-0041	1	Cap-Axle
161	114-8467	1	Hub-Puller, 4 Bolt
162	120-7103	1	Seal And Ring Kit

● Not illustrated

Clutch Assembly

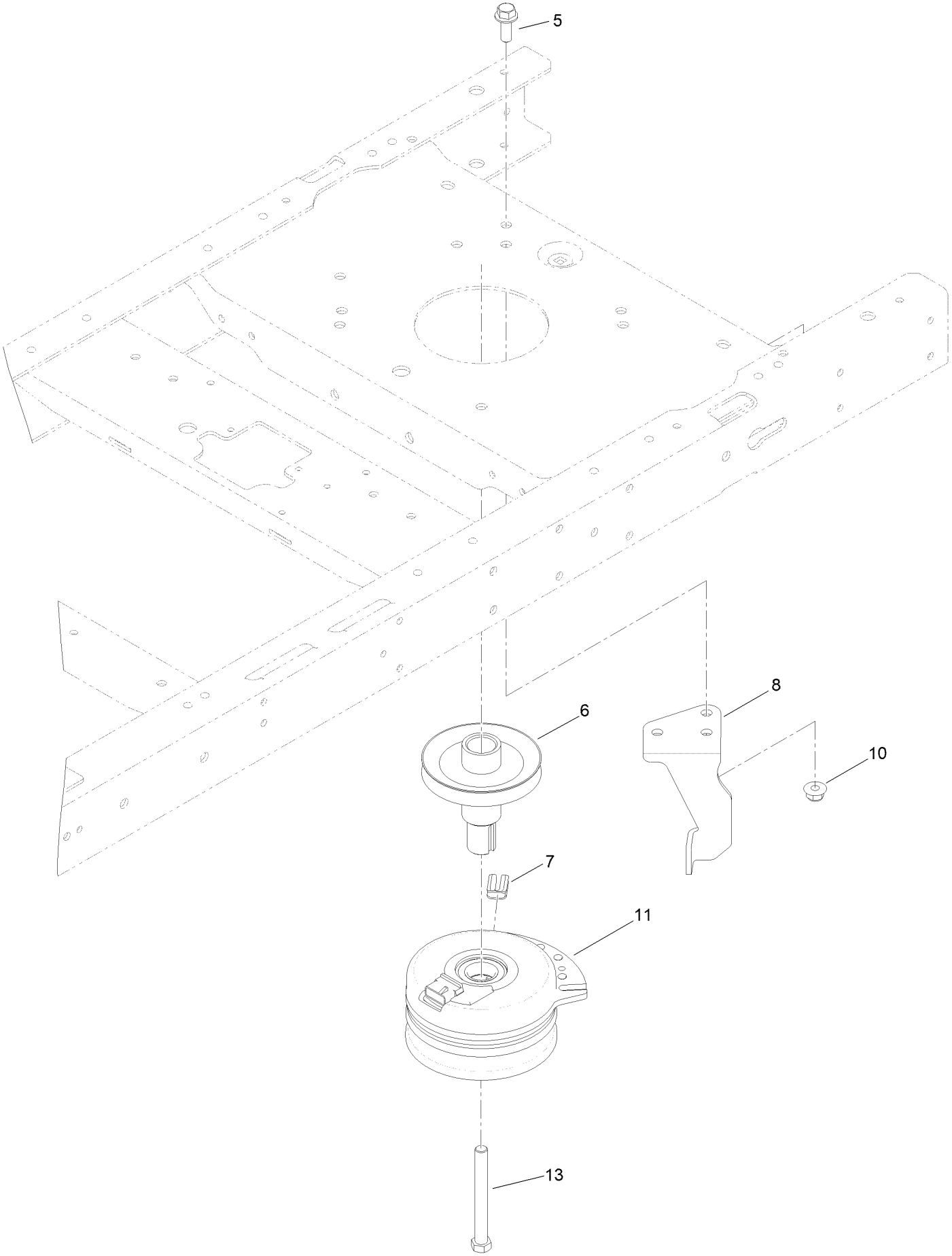

Clutch Assembly (continued)

Ref.	Part Number	Qty.	Description
5	3234-42	1	Screw-HHF
6	130-6854	1	Pulley-Engine
7	120-2217	1	Isolator-Clutch
8	119-8884	1	Stop-Clutch
10	104-8301	1	Nut-Flange, NI
11	117-7468	1	Clutch-Electric
13	3212-16	1	Screw-HH

Engine and Muffler Assembly

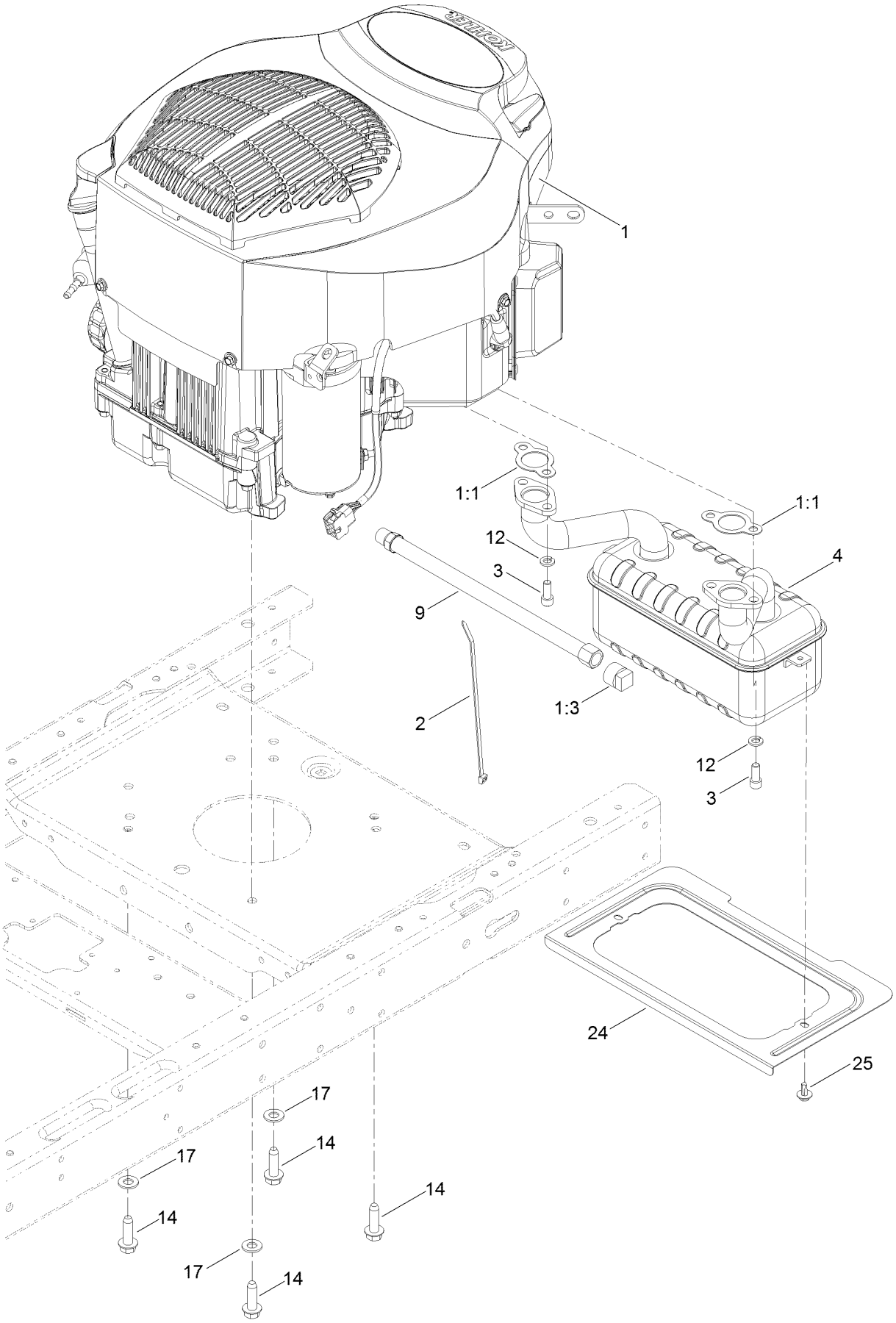

Engine and Muffler Assembly (continued)

Ref.	Part Number	Qty.	Description
1		1	Engine-Kohler 22HP 7000 Series Autochoke ●■
1:1	110-6697	2	Gasket-Exhaust
1:3	281-2	1	Plug-Pipe, SQH
2	614249	1	Tie-Cable
3	3274-10	4	Screw-HSH
4	130-0676	1	Muffler
9	117-1261	1	Hose-Drain, Oil
12	3253-4	4	Washer-Lock
14	32144-109	4	Screw-Taptite
17	3256-24	3	Washer-Flat
24	131-1071-03	1	Shield-Heat
25	46-8560	2	Screw-HHFTF

● Not serviced separately

■ Obtain parts from www.kohlerplus.com

Body Styling and Fuel Tank Assembly

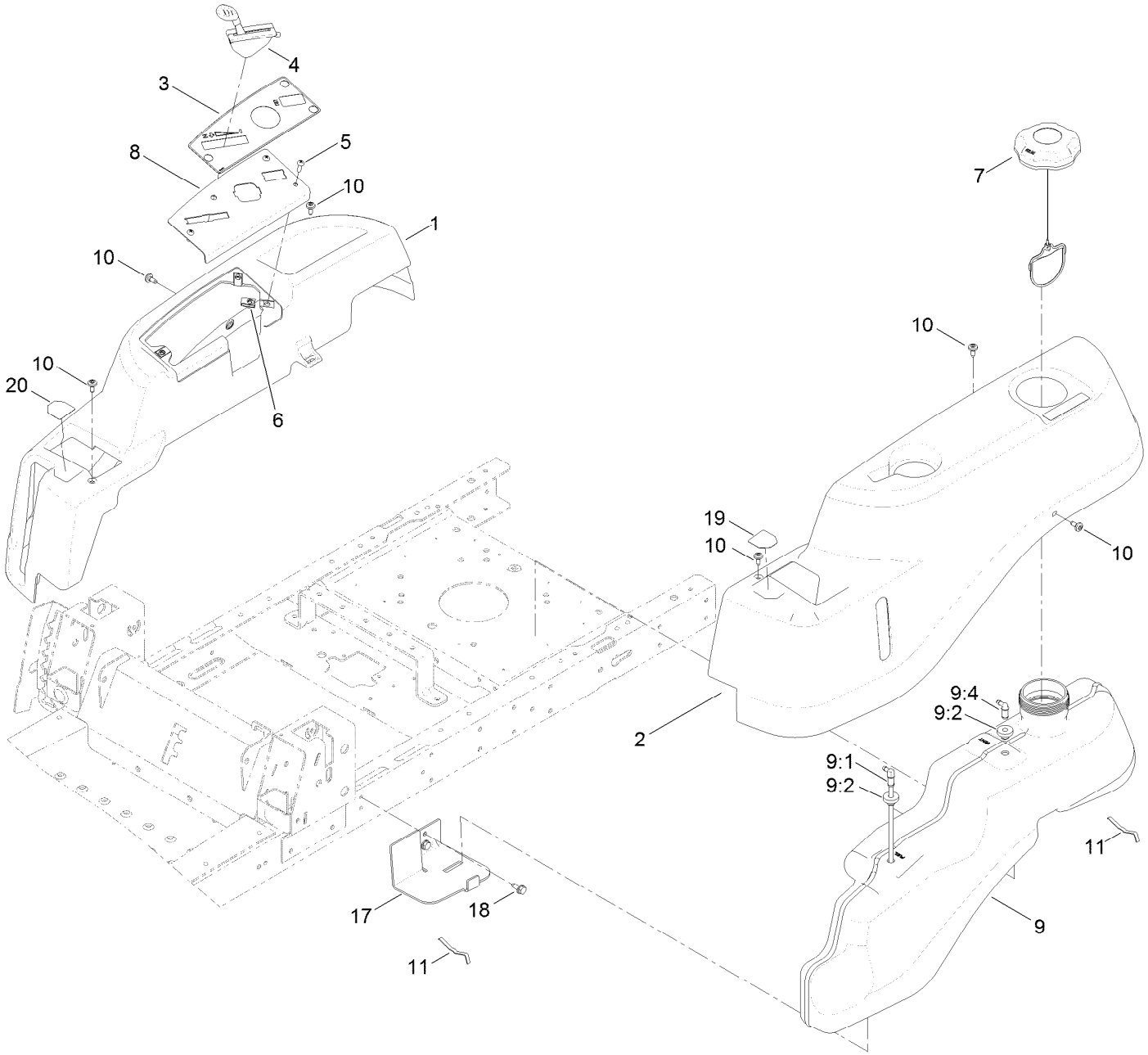

Body Styling and Fuel Tank Assembly (continued)

Ref.	Part Number	Qty.	Description
1	119-3335	1	Pod-RH
2	119-3334	1	Pod-LH
3	131-4161	1	Decal-Panel, Control
4	121-5674	1	Cable-Throttle (45.0 Inch)
5	3258-166	3	Screw-PRH
6	107069	3	Clip
7	120-5461	1	Cap-Fuel, Ratcheting
8	119-3378-03	1	Plate-Control
9	119-3324	1	Fuel Tank ASM

Ref.	Part Number	Qty.	Description
9:1	121-0793	1	Connector-Elbow, 90 DEG
9:2	46-6560	2	Bushing
9:4	117-7400	1	Fitting-Plastic
10	120-7950	6	Screw-Shoulder
11	609830	2	Spring
17	119-3476-03	1	Support-Tank, Front
18	32144-70	2	Screw-HWHTF
19	119-8814	1	Decal-Control Lever, LH
20	119-8815	1	Decal-Control Lever, RH

Fuel Delivery Assembly

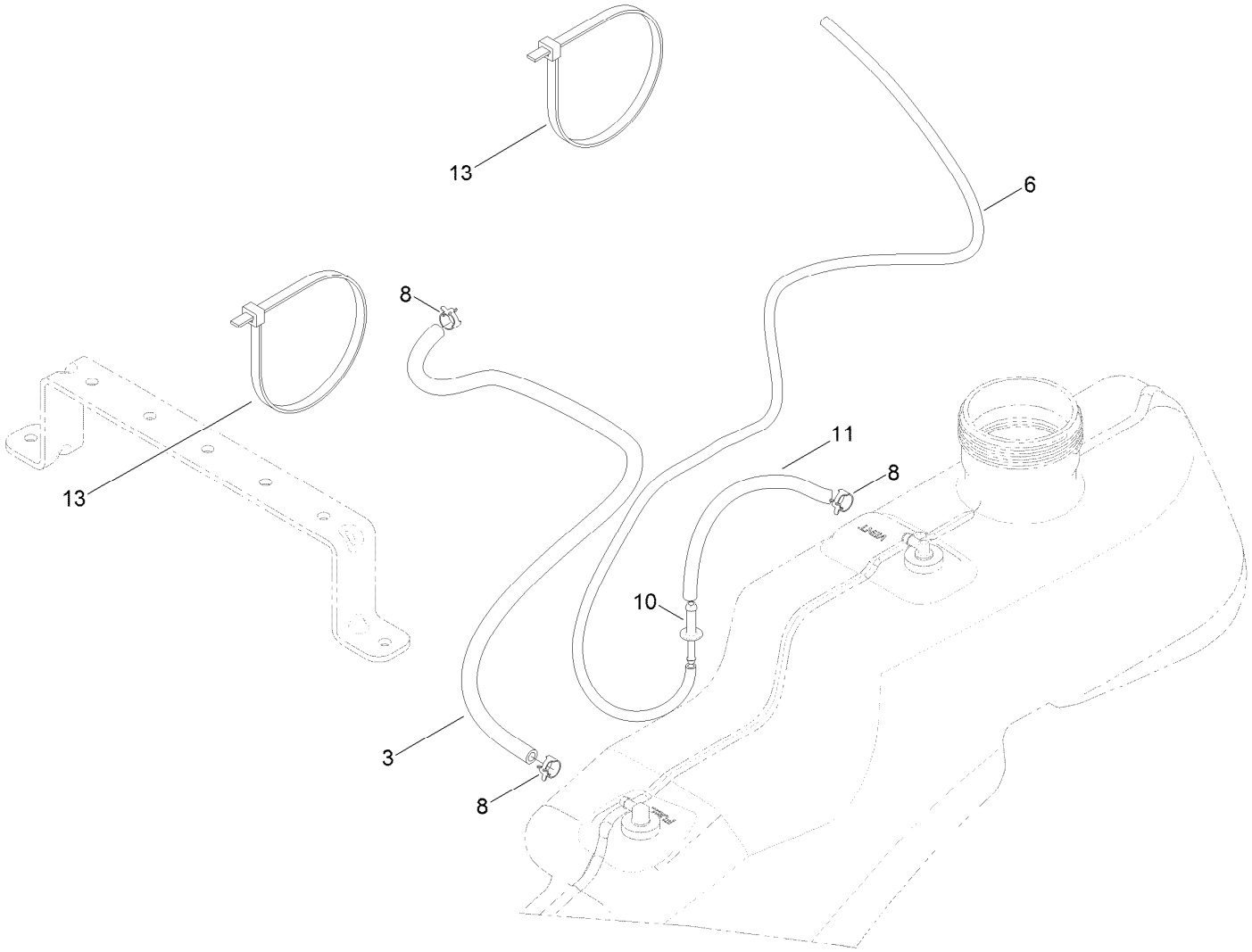

Fuel Delivery Assembly (continued)

Ref.	Part Number	Qty.	Description
3	109-0273	1	Hose-Fuel
6	108-9698	1	Hose-Fuel
8	2412-98	3	Clamp-Hose
10	117-5399	1	Adaptor-Orifice
11	110-1876	1	Hose-Fuel
13	3334-945	2	Tie-Cable

Battery and Electrical Assembly

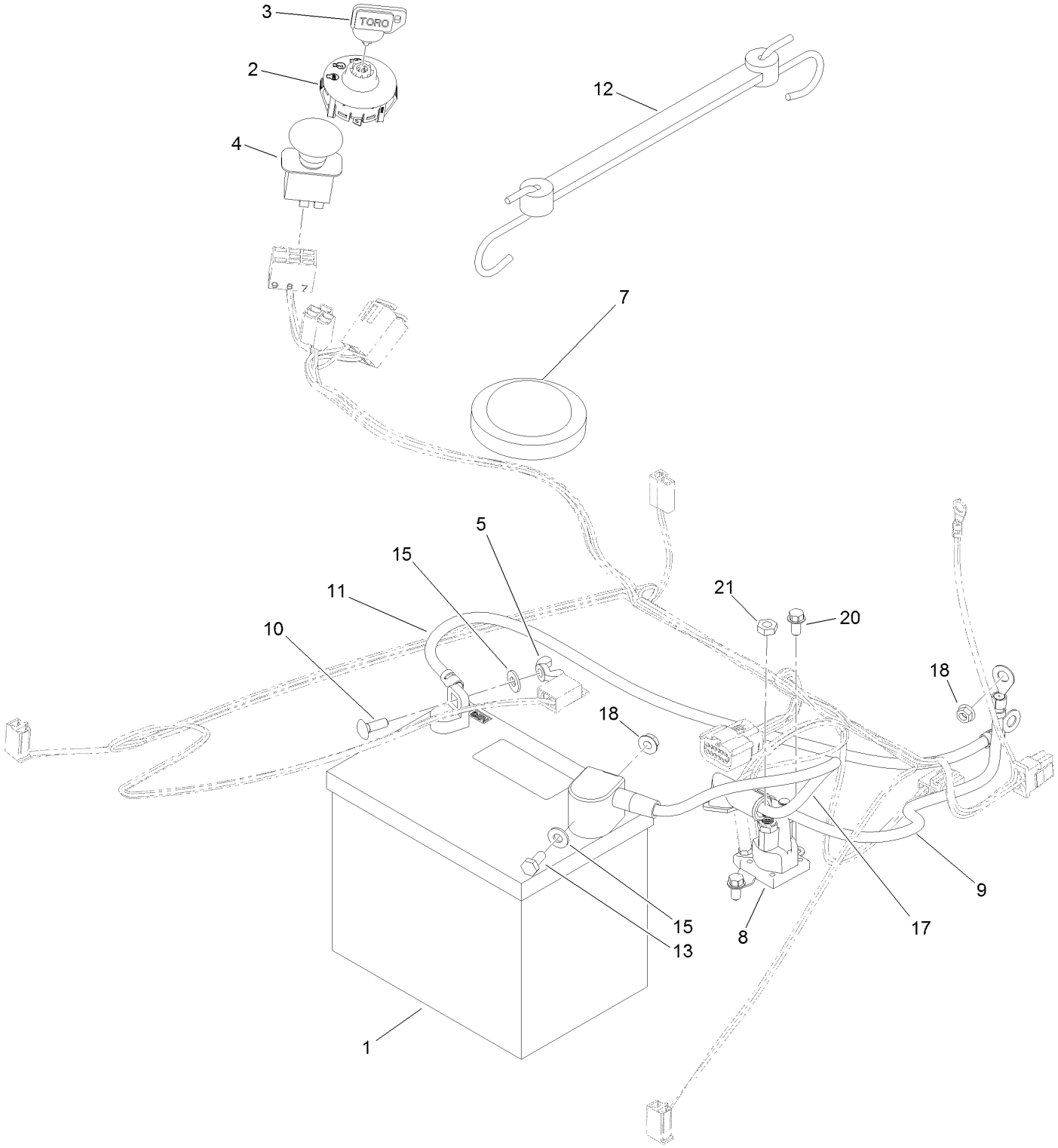

Battery and Electrical Assembly (continued)

Ref.	Part Number	Qty.	Description
1	105-1692	1	Battery-Dry
2	117-2221	1	Switch-Ignition
3	63-8360	1	Key-Ignition
4	103-5221	1	Switch-PTO
5	32103-22	1	Nut-Wing
7	100-3524	1	Switch-Seat
8	117-1197	1	Solenoid
9	121-0711	1	Cable-Battery, Positive
10	3229-1	1	Bolt-CARR
11	121-5726	1	Cable-Battery, Black
12	104-2466	1	Holddown-Battery
13	321-3	1	Screw-HH
15	3256-22	2	Washer-Flat
17	119-8897	1	Cable-Battery, Red
18	32128-33	2	Nut-HF
20	32144-4	2	Screw-HWH
21	3220-2	2	Nut-Jam

Fuse and Wire Harness Assembly

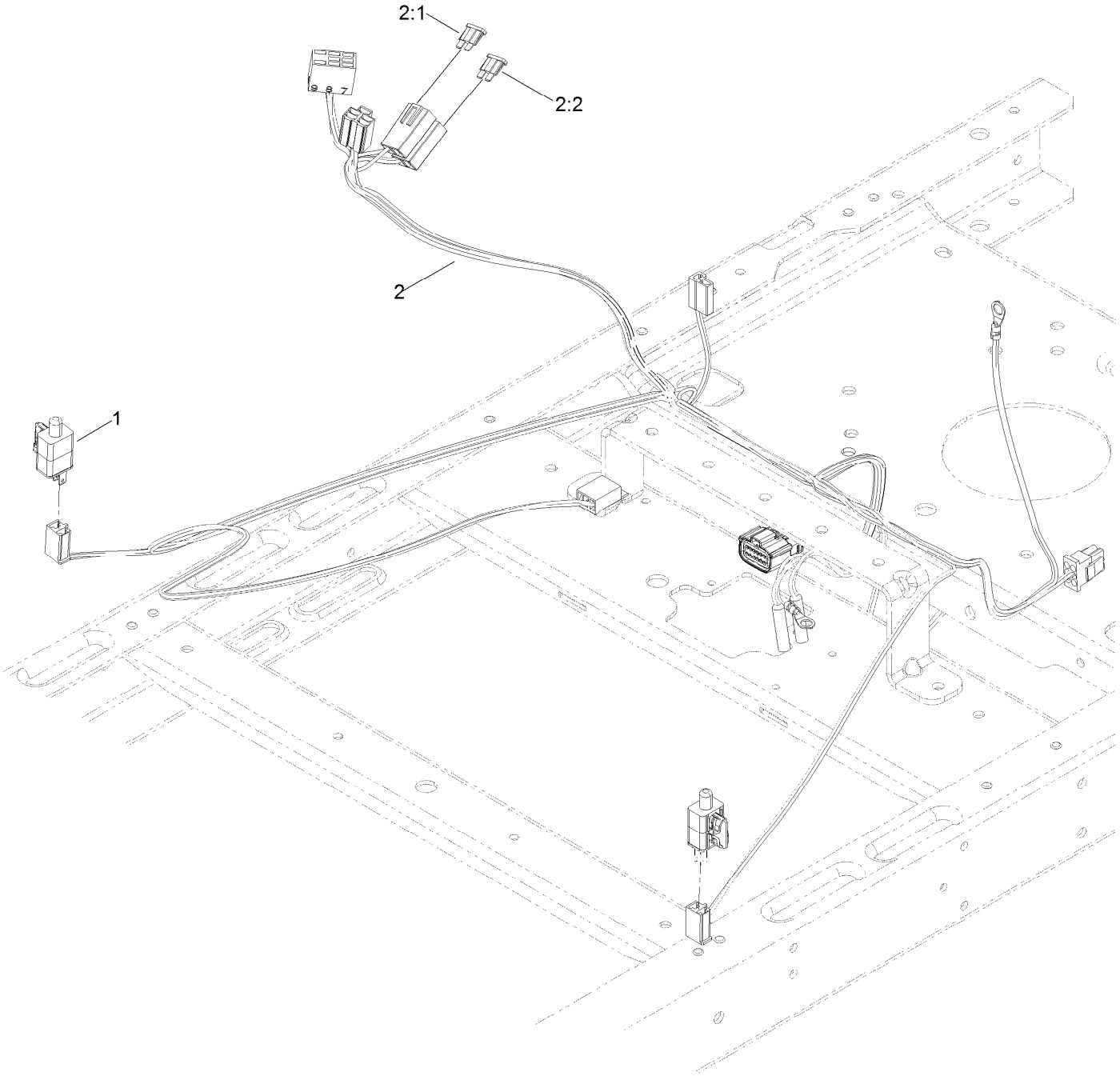

Fuse and Wire Harness Assembly (continued)

Ref.	Part Number	Qty.	Description
1	110-6765	2	Switch
2	132-0924	1	Harness-Wire ●

Ref.	Part Number	Qty.	Description
2:1	109103	1	Fuse-Blade, 30 Amp
2:2	109102	1	Fuse-Blade, 25 Amp

● Use dielectric grease on all unsealed connectors and terminals only. Do not apply in sealed connectors.

42 Inch Deck Assembly

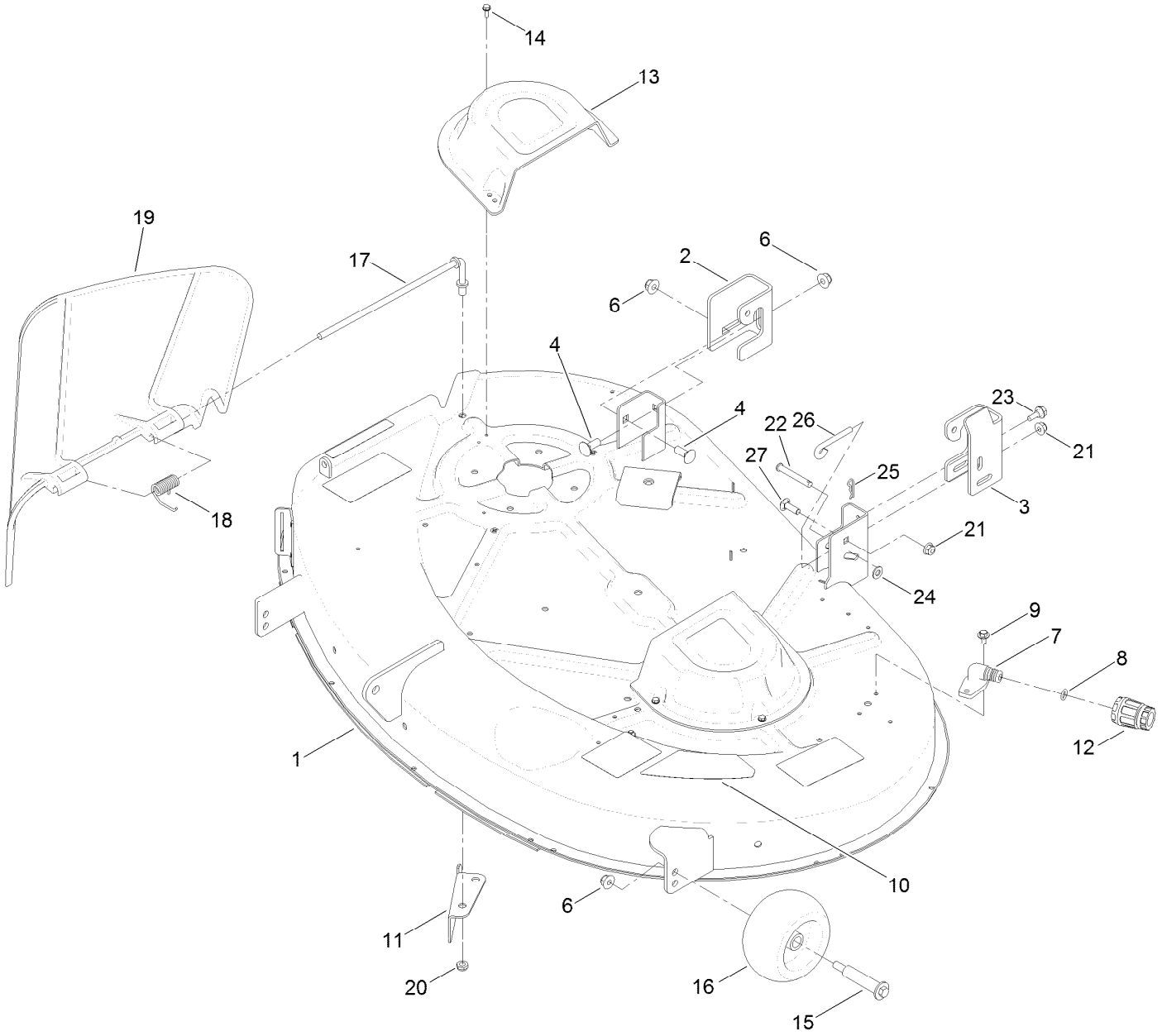

42 Inch Deck Assembly (continued)

Ref.	Part Number	Qty.	Description
1	131-3604	1	42 Inch Deck And Decal ASM
2	131-4138	1	Bracket-Hanger, RH
3	131-1091	1	Bracket-Hanger, LH
4	3231-2	2	Bolt-CARR
6	104-8301	4	Nut-Flange, NI
7	95-2747	1	Fitting-Washout
8	46-6290	1	O-Ring
9	46-8560	2	Screw-HHFTF
10	117-1222	1	Decal
11	112-3983-03	1	Baffle-Cutoff
12	95-3270	1	Connector-Hose
13	108-7889	2	Cover-Belt
14	32144-1	6	Screw-Taptite
15	112-3977	2	Bolt-Shoulder
16	1-603299	2	Roller-Scalp, Anti
17	112-4026	1	Rod-Pivot
18	110-6694	1	Spring-Torsion
19	112-3951	1	Deflector
20	3296-59	1	Nut-Lock, NI
21	104-8300	2	Nut-Flange, NI
22	110-0618	1	Pin-Clevis
23	120-7024	1	Screw-Shoulder, HHF
24	3256-23	1	Washer-Flat
25	1-806003	1	Pin-Cotter
26	131-0955	1	Rod-Level, Deck
27	3230-22	1	Screw-CARR

42 Inch Deck Assembly No. 131-3604

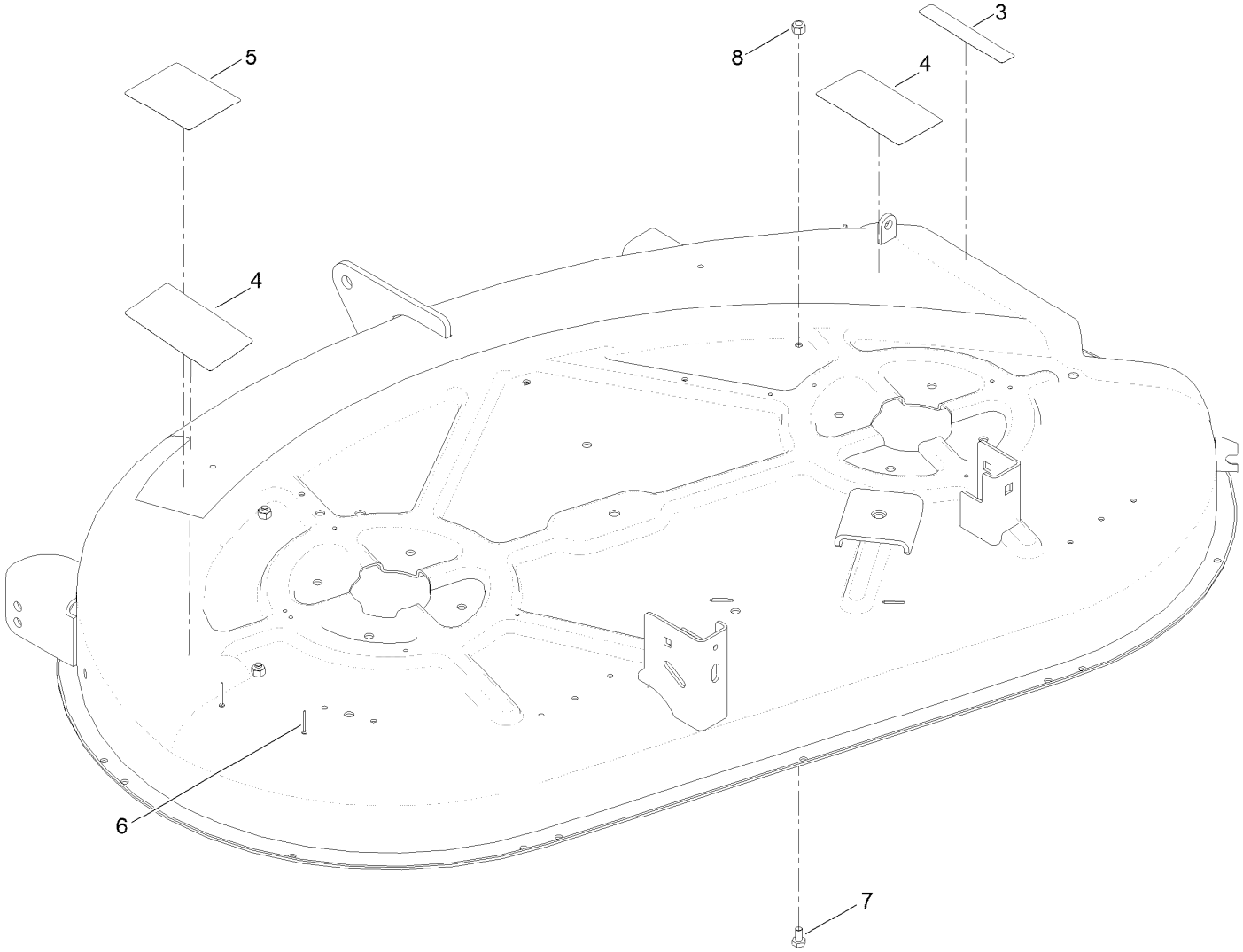

42 Inch Deck Assembly No. 131-3604 (continued)

Ref.	Part Number	Qty.	Description
3	93-7009	1	Decal-Danger
4	132-0872	2	Decal-Danger, Deck
5	105-7015	1	Decal-Routing, Belt
6	3290-282	2	Rivet-Blind
7	321-2	3	Screw-HH
8	3296-42	3	Nut-Lock, NI

42 Inch Deck, Belt and Blade Assembly

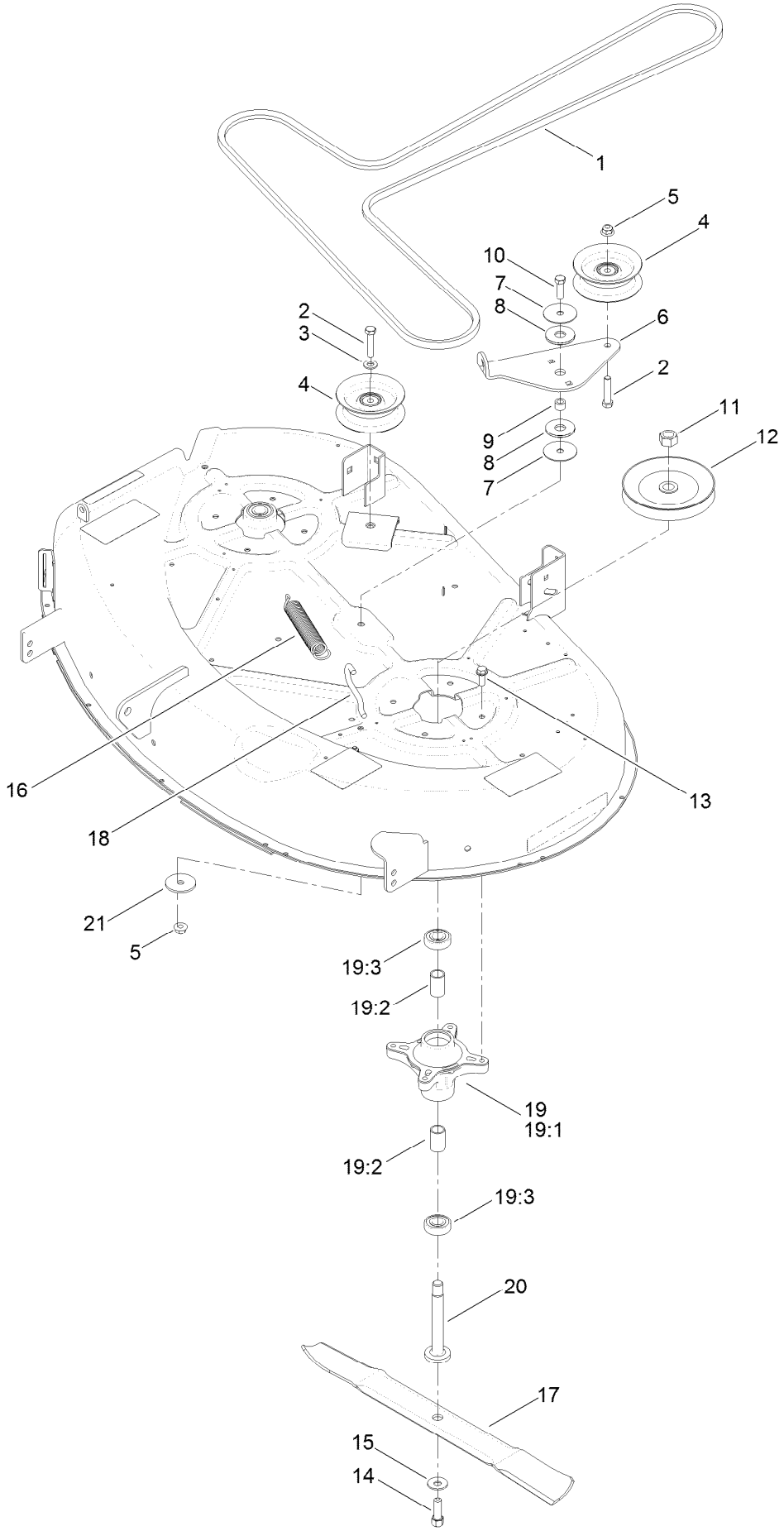

42 Inch Deck, Belt and Blade Assembly (continued)

Ref.	Part Number	Qty.	Description
1	119-8819	1	V-Belt
2	323-9	2	Screw-HH
3	3256-24	1	Washer-Flat
4	106-2175	2	Pulley-Idler, Flat
5	104-8301	2	Nut-Flange, NI
6	114-8540	1	Arm-Idler
7	120-2229	2	Washer
8	114-0463	2	Washer-Friction, Composite
9	115-4986	1	Spacer
10	323-7	1	Screw-HH
11	3219-6	2	Nut-Hex
12	125-5574	2	Pulley

Ref.	Part Number	Qty.	Description
13	32144-41	8	Screw-Taptite
14	26-0671	2	Screw-HH
15	3290-465	2	Washer-Belleville
16	106-2177	1	Spring-Extension
17	131-3939-03	2	Blade-High Lift, 21.60 Inch
18	88-5970	1	Hook-Return, Spring
19	121-0751	2	Spindle ASM
19:1	117-7267	1	Spindle
19:2	120-7935	2	Spacer
19:3	38-7820	2	Bearing-Ball
20	117-7268	2	Shaft-Spindle
21	63-7400	1	Washer-Rebound

Attachments and Accessories

For 74721 TimeCutter SS 4225 Riding Mower

Product Name	Model/Part
Attachment Mount Kit	131-3966
Weight Kit	131-7658
Cargo Carrier	79040
42in Bagger, Zero-Turn-Radius Riding Mower	79391
42in Blowout Ring Kit	114-1620
42in Recycler Kit	131-4182
Striping Kit	120-7905
Replacement Blade Kit	131-3939-03P
Foot Assist Deck Lift Kit, 2011 and After Zero-Turn-Radius Riding Mower	79010
Floor Mat Kit	132-6921
Seat With Armrests-18in	119-8830
Sunshade Kit	79011
Hourmeter Kit	116-5461
Assist Handle and Step Kit	79339
Storage Cover	490-7516
Fuel Stabilizer (4oz)	117-0089
Fuel Stabilizer (16oz)	117-0090
Oil-Synthetic, All Season	117-0066
10w30 4-cycle Engine Oil (32oz Bottle)	38280
Toro 4-cycle Sae 30 Oil (32oz Bottle)	38903
Deluxe Seat Kit	131-7699
Jack Mount Kit	126-5251
Jack Kit	127-6666

Notes:

Notes:

Notes:

TORO®

Count on it.