FORM NO. 3319–421

TORO®

CCR POWERLITE®

SNOWTHROWER

Model No. 38170 – 8900001 & Up
Model No. 38175 – 8900001 & Up

PROTOTYPE

Operator’s Manual

WARNING:

The engine exhaust from this product contains chemicals known to the State of California to cause cancer, birth defects, or other reproductive harm.

PROTOTYPE

Figures

1

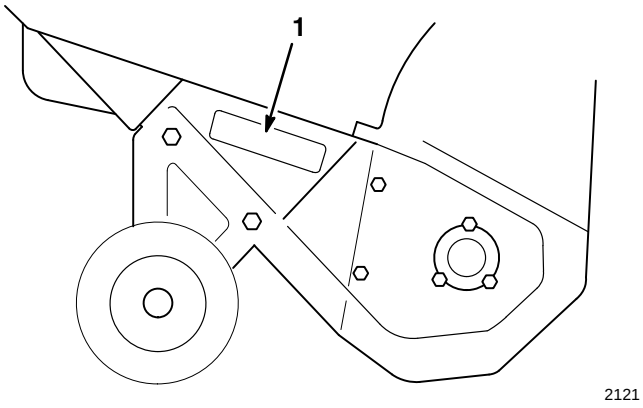

1. Model and serial number decal

2

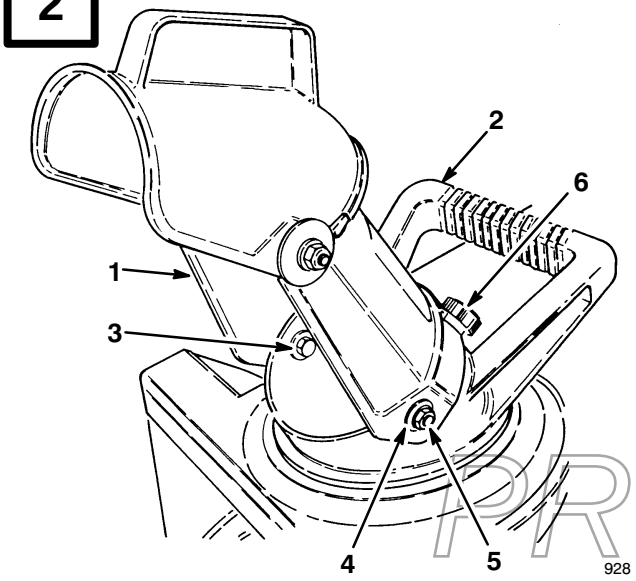

1. Discharge chute
2. Chute handle
3. Hex bolt
4. Washer
5. Locknut
6. Knob

3

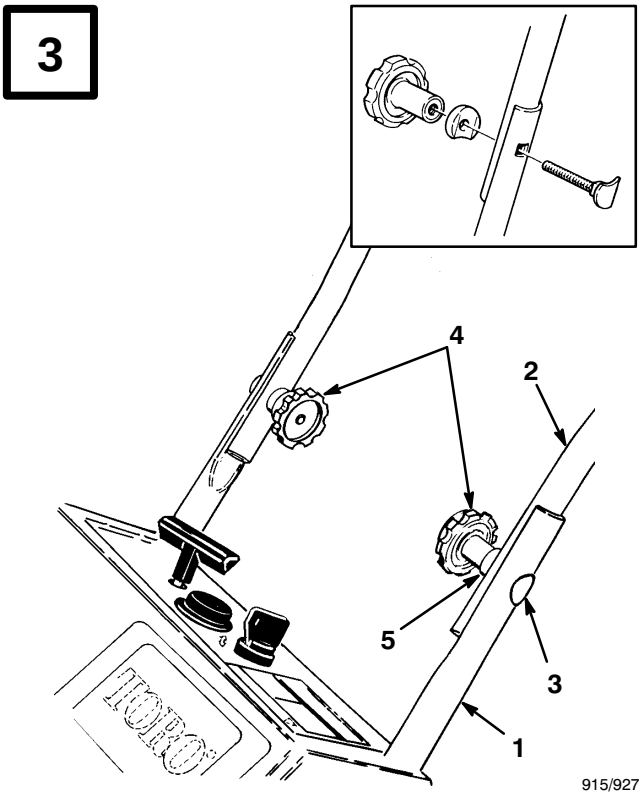

1. Lower
2. Upper handle
3. Oval head bolt
4. Knob
5. Curved washers

4

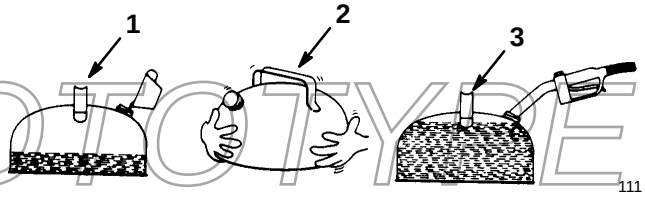

1. Add oil to small amount of gasoline
2. Install cap and shake can to mix
3. Add remaining amount of gasoline

PROTOTYPE

©The Toro Company – 1997
All Rights Reserved

Printed in USA

5

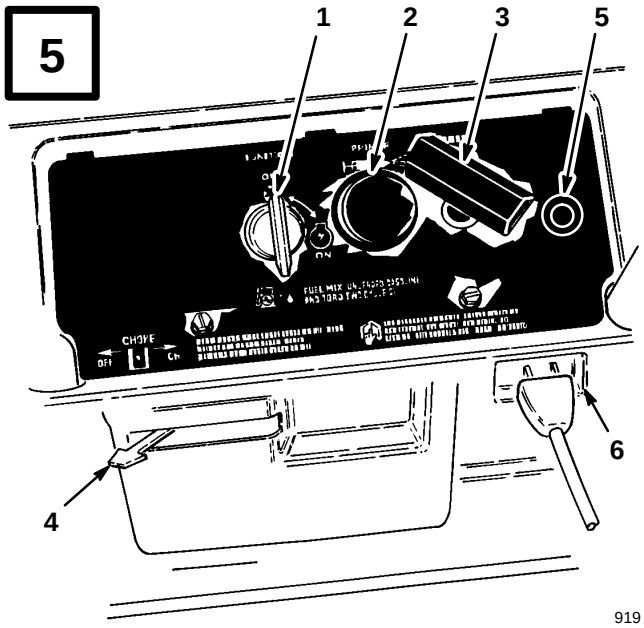

919

1. Key switch
2. Primer
3. Recoil start
4. Choke lever
5. Elec. start button*
6. Cord connection*

* ELEC. START MODEL

6

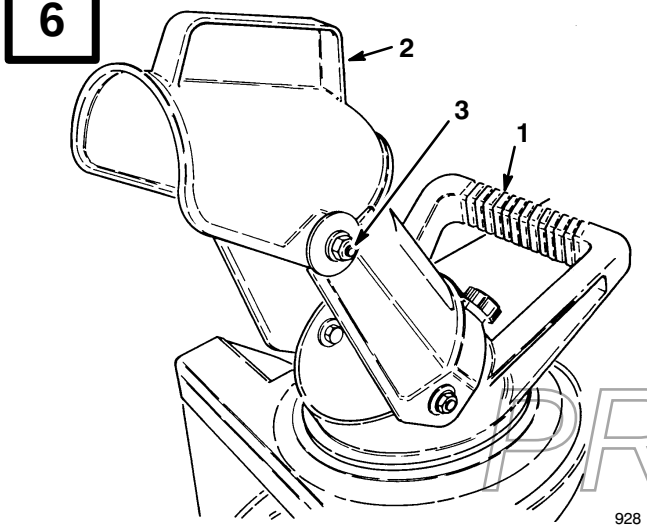

928

1. Chute handle
2. Chute deflector handle
3. Deflector mounting nuts

7

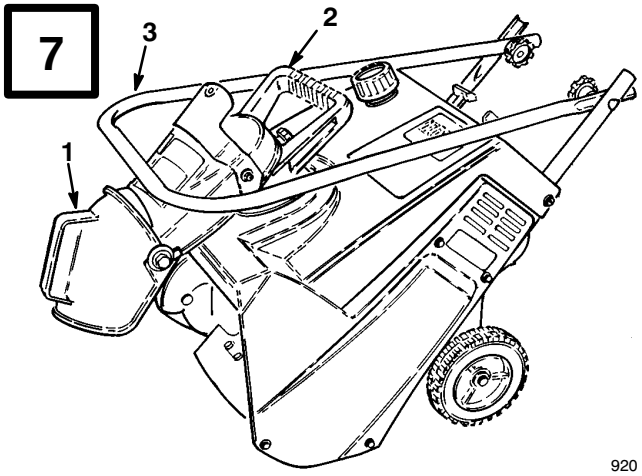

920

1. Discharge chute
2. Discharge chute handle
3. Handle

8

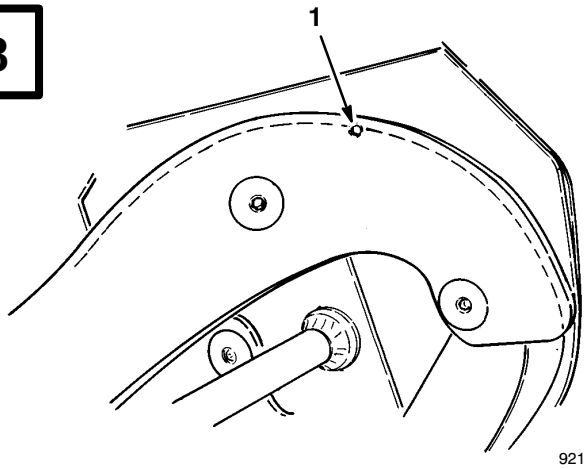

921

1. Wear indicator hole

PROTOTYPE

9

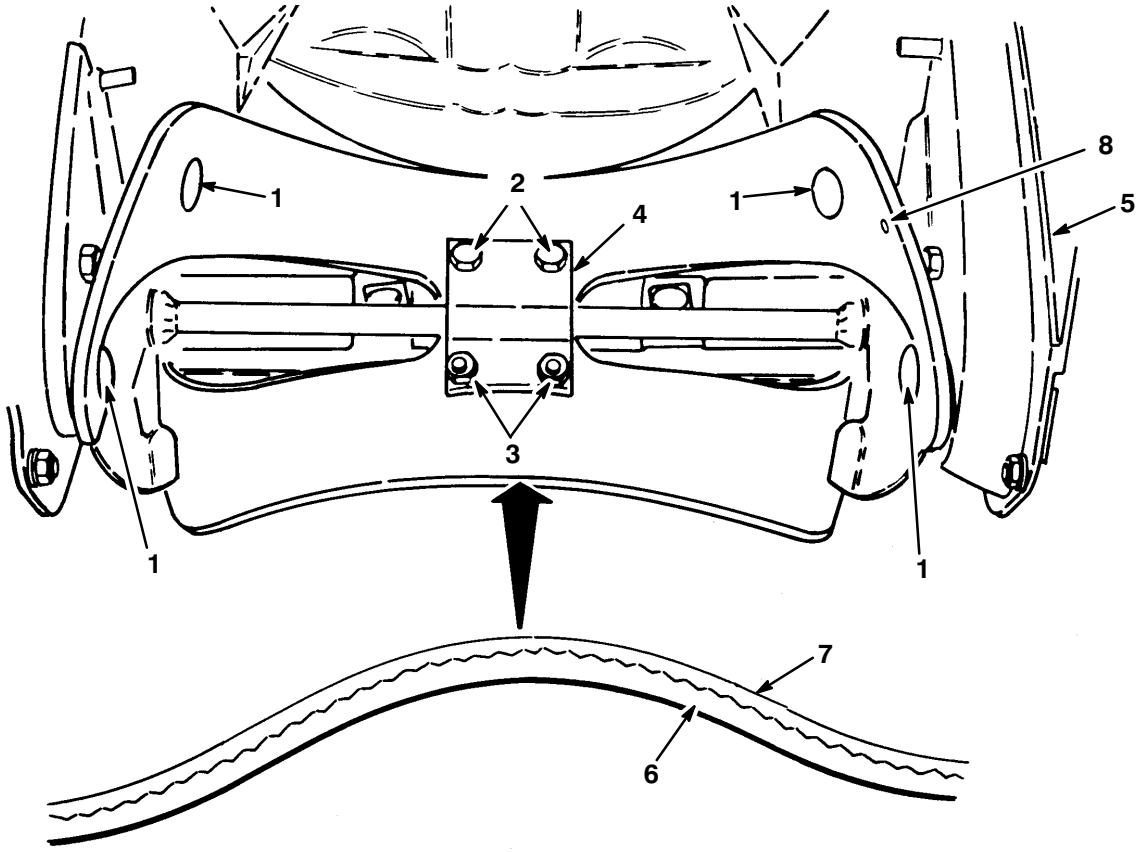

929

1. Torx screw
2. Capscrew
3. Locknut
4. Blade support
5. Drive belt cover
6. Thick layer
7. Thin layer
8. Wear indicator hole

10

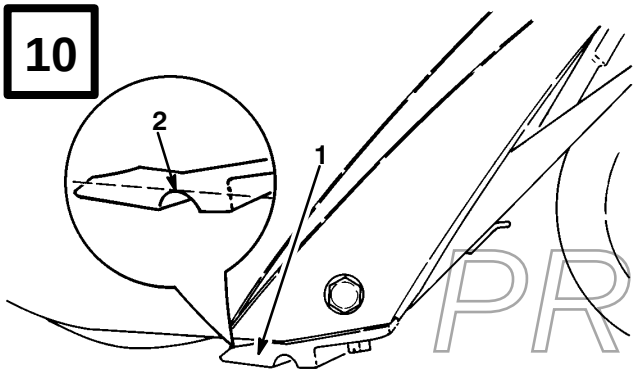

923

1. Scraper
2. Wear indicator groove

11

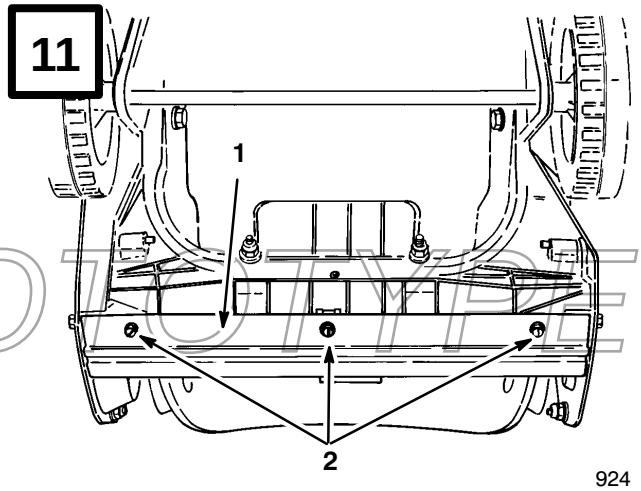

924

1. Scraper
2. Screws

PROTOTYPE

12

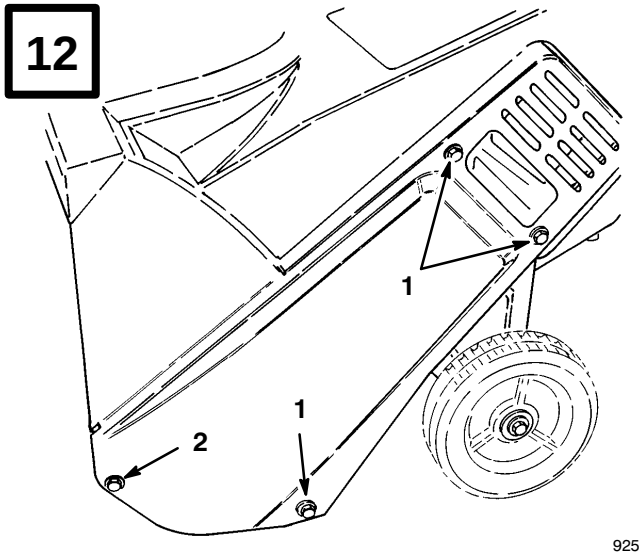

925

1. Self tapping screws
2. Capscrew, nut, washer

13

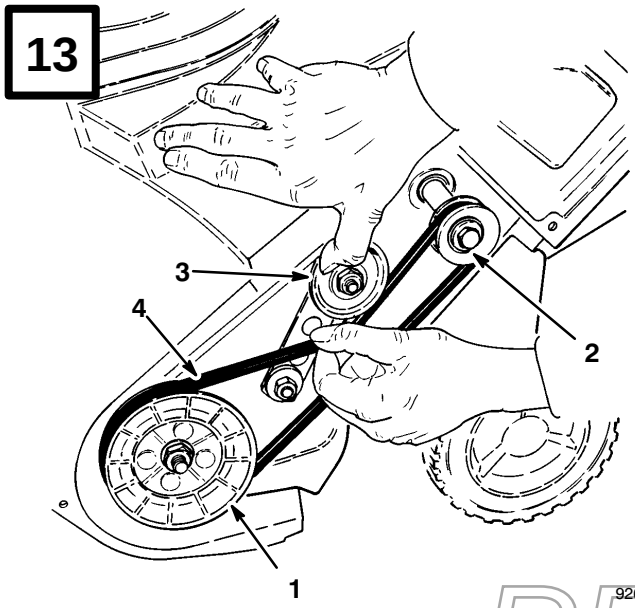

926

1. Rotor pulley
2. Drive pulley
3. Idler pulley
4. Drive belt

14

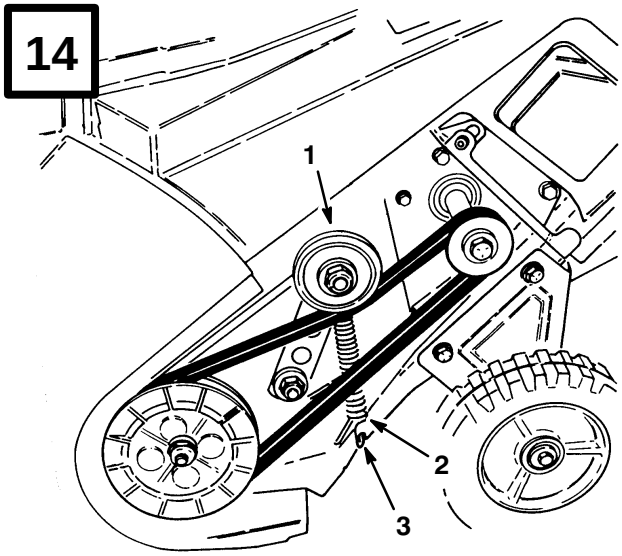

930

1. Idler pulley
2. Idler spring
3. Notch

15

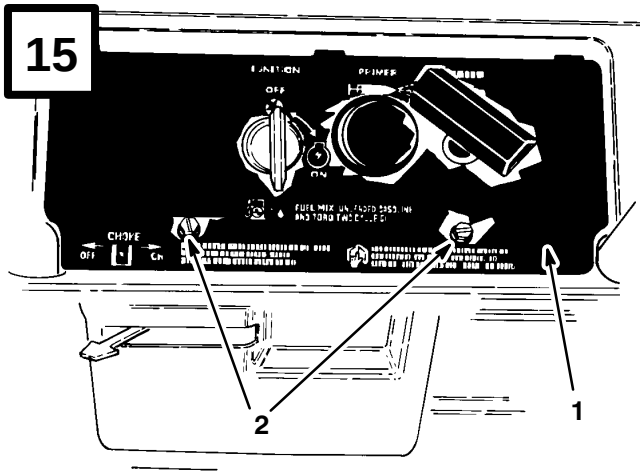

917

1. Control panel
2. Screws

PROTOTYPE

16

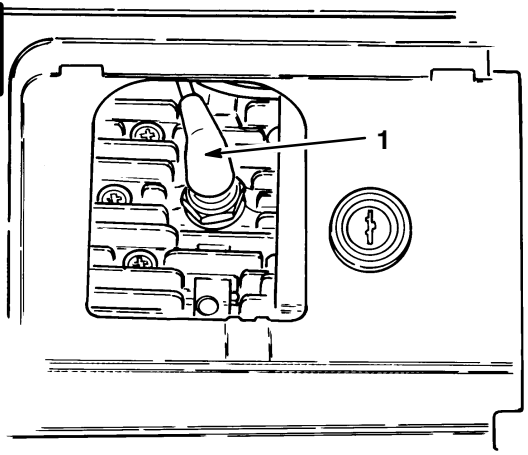

918

1. Spark plug wire

17

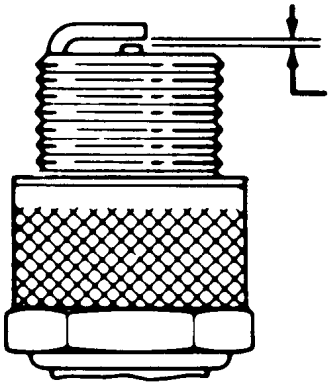

110

PROTOTYPE

Contents

	Page
Introduction	1
Safety	2
Symbol Glossary	5
Assembly	6
Install Discharge Chute	6
Install Handle	6
Before Starting	6
Mix Gasoline And Oil	6
Operation	8
Starting/Stopping Engine	8
Operating Tips	8
Folding Snowthrower	9
Maintenance	10
Draining Gasoline	10
Replacing Rotor Blades	10
Replacing Scraper	11
Replacing Drive Belt	11
Replacing Spark Plug	11
Storage	12
Warranty	13

Introduction

Thank you for purchasing a Toro product.

All of us at Toro want you to be completely satisfied with your new product, so feel free to contact your local Authorized Service Dealer for help with service, genuine Toro parts, or other information you may require.

Whenever you contact your Authorized Service Dealer or the factory, always know the model and serial numbers of your product. These numbers will help the Service Dealer or Service Representative provide exact information about your specific product. You will find the model and serial number decal located in a unique place on the product (Fig. 1).

For your convenience, write the product model and serial numbers in the space below.

Model No: _____

Serial No. _____

Read this manual carefully to learn how to operate and maintain your product correctly. Reading this manual will help you and others avoid personal injury and damage to the product. Although Toro designs, produces and markets safe, state-of-the-art products, you are responsible for using the product properly and safely. You are also responsible for training persons who you allow to use the product about safe operation.

The Toro warning system in this manual identifies potential hazards and has special safety messages that help you and others avoid personal injury, even death. DANGER, WARNING and CAUTION are signal words used to identify the level of hazard. However, regardless of the hazard, be extremely careful.

DANGER signals an extreme hazard that will cause serious injury or death if the recommended precautions are not followed.

WARNING signals a hazard that may cause serious injury or death if the recommended precautions are not followed.

CAUTION signals a hazard that may cause minor or moderate injury if the recommended precautions are not followed.

PROTOTYPE

Two other words are also used to highlight information. “Important” calls attention to special mechanical information and “Note” emphasizes general information worthy of special attention.

The left and right side of the machine is determined by standing behind the handle in the normal operator’s position.

Safety

To ensure maximum safety, best performance, and to gain knowledge of the product, it is essential that you or any other operator of the snowthrower read and understand the contents of this manual before the motor is ever started. Pay particular attention to the safety alert symbol ⚠ which means CAUTION, WARNING OR DANGER — "personal safety instruction." Read and understand the instruction because it has to do with safety. Failure to comply with instruction may result in personal injury.

This snowthrower is designed and tested to offer safe and effective service, provided it is operated in strict accordance with the following Safety Instructions. Failure to comply with the following instructions **MAY RESULT IN PERSONAL INJURY**.

Before Operating

1. Read and understand the contents of this manual carefully before operating the snowthrower. Be thoroughly familiar with all controls and proper use of the equipment. Know how to stop the snowthrower and disengage the controls quickly.

2. Never allow children to operate the snowthrower. Adults should operate the snowthrower only after reading this manual.

3. Keep everyone, especially children and pets, away from the snowthrower and area of operation.

4. Inspect area thoroughly where snowthrower will be used. Remove doormats, sleds, boards, sticks, wire, and any other foreign objects which might be picked up and thrown by the snowthrower.

5. Keep all shields and safety devices in place. If a shield, safety device, or decal is illegible or damaged, repair or replace it before beginning operation. Also, tighten any loose nuts, bolts, knobs or screws.

6. Wear adequate winter clothing and rubber boots that will ensure proper footing on slippery surfaces. Do not wear loose fitting clothing that could possibly get caught in moving parts.

7. Always wear safety glasses or eye shields during operation or while performing an adjustment or repair to protect eyes from foreign objects that may be thrown from the machine.

8. Because fuel is highly flammable, handle it carefully.

A. Use an approved fuel container.

B. Fill fuel tank outdoors with extreme care, not indoors.

C. **NEVER ADD FUEL TO AN ENGINE THAT IS RUNNING OR HOT.**

D. Replace gas cap securely on fuel container and gas tank, and wipe up any spilled gasoline before starting engine.

9. Allow engine to warm up outdoors before operating.

10. Engines produce carbon monoxide gas, which is an odorless, deadly poison; therefore, do not run engine indoors or in an enclosed area.

While Operating

11. Use only the extension cord provided with the CCR POWERLITE® Electric Start Model. Do not plug the extension cord into outlet while standing in water or when hands are wet. Do not use cord if gasoline has been spilled. If extension cord is damaged, replace immediately.

12. Never direct discharge toward or operate snowthrower near bystanders, glass enclosures, automobiles and trucks, window wells, or a drop–off. Never allow anyone in front of snowthrower.

PROTOTYPE

13. Operate the snowthrower only when there is good visibility or light.

14. Always maintain secure footing and balance and keep a firm grip on the handle. Walk; never run. Exercise caution to avoid slipping or falling.

15. Be attentive when using the snowthrower, and stay alert for holes in the terrain and other hidden hazards.

16. **STAY AWAY FROM DISCHARGE OPENING WHILE OPERATING THE SNOWTHROWER. WHEN THE ENGINE IS RUNNING, THE DISCHARGE ROTOR IS TURNING.** Keep face, hands, feet, and any other part of your body or clothing away from concealed, moving or rotating parts.

17. Never clear snow off steep slopes or across the face of slopes. Exercise extreme caution when changing direction on slopes.

18. **DO NOT USE SNOWTHROWER ON A ROOF.**

19. Do not overload the snowthrower by clearing snow at too fast a rate.

20. Never operate the machine at high transport speeds on slippery surfaces.

21. **Use extreme caution** when crossing or operating snowthrower on walks or roads. It is not recommended that snowthrower be used on gravel or crushed rock drives. Stay alert for hidden hazards or traffic. Refer to Operation, page 9, item 5 for correct operating procedure.

22. If a foreign object is hit or snowthrower vibrates abnormally, stop engine by turning key to OFF, disconnect spark plug wire, disconnect the cord on electric start units, and wait for all moving parts to stop. Check snowthrower immediately for possible damage, an obstruction or loose parts. Vibration is generally a sign of trouble. Repair any damage before operating snowthrower again.

23. Before adjusting, cleaning, repairing or inspecting the snowthrower, or before unclogging the discharge chute or impeller housing, stop engine by turning key to OFF and wait for all moving parts to stop. Do not make any adjustments while engine is running. Disconnect the spark plug wire and keep the wire away from plug to prevent accidental starting.

24. **WHENEVER YOU LEAVE THE OPERATING POSITION, STOP ENGINE BY TURNING KEY TO OFF. REMOVE KEY FROM SWITCH IF UNIT WILL BE UNATTENDED.**

25. Let snowthrower run for a few minutes after clearing snow so moving parts do not freeze.

26. Remove key from switch when snowthrower is transported or not in use.

27. Always drain gasoline from snowthrower fuel tank before transporting in a car trunk or vehicle; refer to Draining Gasoline, page 10. Gasoline and its fumes are highly flammable, explosive, and dangerous if inhaled.

Maintaining Snowthrower

28. REMOVE KEY FROM SWITCH when storing snowthrower. Store key in a memorable place.

29. Never store snowthrower with fuel in fuel tank inside a building where ignition sources such as an open flame, sparks, hot water and space heaters, and clothes dryers are present. Allow engine to cool before storing. Never store snowthrower in house (living area) or basement because gasoline and fumes are highly flammable, explosive, and dangerous if inhaled.

30. Always refer to Operator's Manual for important details if snowthrower is to be stored for an extended period.

PROTOTYPE

31. Perform only those maintenance instructions described in this manual. Remove key from switch before performing maintenance procedures to prevent the possibility of accidental starting. If major repairs are ever needed, contact your local Authorized TORO Service Dealer for assistance.

32. Keep snowthrower in safe operating condition by keeping nuts, bolts, and screws tight. Check all fasteners frequently to assure they are tight.

33. To assure optimum performance and safety, purchase genuine TORO replacement parts and accessories to keep your TORO all TORO. **NEVER USE "WILL FIT" REPLACEMENT PARTS AND ACCESSORIES.**

PROTOTYPE

Symbol Glossary

Safety alert symbol



Read operator's manual



Shut off engine before unclogging discharge chute



Cutting or entanglement of foot – rotating auger



Shut off engine and remove key before leaving operator position – single stage snowthrower



Hot surface



Choke



Primer pump



Recoil starter

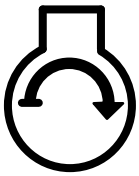

Ignition off



Ignition on



110 volt starter



50:1 ratio unleaded gasoline to TORO 2–cycle oil



PROTOTYPE

Assembly

Note: Determine left and right sides of snowthrower by standing in the normal operating position.

Install Discharge Chute (Fig. 2)

1. Position holes on sides of discharge chute over hex bolts on sides of chute handle. Secure discharge chute onto hex bolts with (2) washers and (2) locknuts. While holding hex bolt heads with a wrench (7/16), tighten locknuts securely.

2. Rotate discharge chute to the completely upright position. Install knob **TIGHTLY** onto screw at rear of discharge chute.

Install Handle (Fig. 3)

1. Position ends of upper handle on inside of lower handles and align holes. Secure upper handle to lower handles using oval head bolts, curved washers, and knobs. Position knobs and curved washers on inside of handle and **TIGHTEN KNOBS SECURELY** to prevent them from loosening.

   Note: Make sure the oval head bolts and curved washers are aligned correctly as shown in Figure 3 to prevent knobs from loosening.

Before Starting

⚠ DANGER

POTENTIAL HAZARD
- **In certain conditions gasoline is extremely flammable and highly explosive.**

WHAT CAN HAPPEN
- **A fire or explosion from gasoline can burn you, others, and cause property damage.**

HOW TO AVOID THE HAZARD
- **Use a funnel and fill the fuel tank outdoors, in an open area, when the engine is cold. Wipe up any gasoline that spills.**
- **Do not fill the fuel tank completely full. Add gasoline to the fuel tank until the level is 1/4" to 1/2" (6 mm to 13 mm) below the bottom of the filler neck. This empty space in the tank allows gasoline to expand.**
- **Never smoke when handling gasoline, and stay away from an open flame or where gasoline fumes may be ignited by a spark.**
- **Store gasoline in an approved container and keep it out of the reach of children.**
- **Never buy more than a 30-day supply of gasoline.**

ENGINES WHICH ARE CERTIFIED TO COMPLY WITH CALIFORNIA AND U.S. EPA EMISSION REGULATIONS FOR ULGE ENGINES: Are certified to operate on regular unleaded gasoline/oil mix. Include the following emission control system(s): EM, TWC (if so equipped); Do not include any user adjustable features – therefore no other adjustments are needed.

PROTOTYPE

Mix Gasoline And Oil (Fig. 4)

Use clean, fresh lead-free gasoline, including *oxygenated* or *reformulated* gasoline, with an octane rating of 85 or higher. To ensure freshness, purchase only the quantity of gasoline that can be used in 30

days. Use of lead-free gasoline results in fewer combustion chamber deposits and longer spark plug life. Use of premium grade fuel is not necessary.

1. APPROVED OIL—For simplicity and best engine performance, mix the contents of one 5.2 ounce bottle of Toro 50:1 Two–Cycle Oil with two gallons of fresh, unleaded regular gasoline. You can also use Toro "Easy Mix" Two–Cycle Oil (3.2 ounce bottle mixed one per gallon of gasoline; 40:1 ratio) in this Toro two–cycle engine. Leaded regular gasoline may be used if unleaded regular is not available.

Toro Two–Cycle Oil is specially formulated to provide superior lubrication, make starting easy, and prolong engine life. If Toro Two–Cycle Oil is not available, mix two gallons of gasoline and 5.2 ounces of another high grade two–cycle oil that has the NMMA or BIA–TCW certification printed on the label.

NEVER USE AUTOMOTIVE OIL (i.e. SAE 30, 10W30 etc.), TWO–CYCLE OIL THAT IS NOT CERTIFIED NMMA/BIA–TCW, OR THE WRONG MIX RATIO BECAUSE THE ENGINE CAN BE DAMAGED, AND IT WOULD NOT BE COVERED BY THE TORO WARRANTY.

2. Mixing Gasoline and Oil—Pour a half gallon of gasoline into an approved gasoline container and add the correct amount of two–cycle oil. Install cap on gasoline container and shake the container to mix oil and gas thoroughly. Remove cap and add remaining amount of gasoline.

Toro also recommends that Toro Stabilizer/Conditioner be used regularly in all Toro gasoline powered products during operation and storage seasons. Toro Stabilizer/Conditioner cleans the engine during operation and prevents gum–like varnish deposits from forming in the engine during periods of storage.

Note: A fuel stabilizer/conditioner is most effective when mixed with fresh gasoline.

IMPORTANT: NEVER USE METHANOL, GASOLINE CONTAINING METHANOL, GASOHOL CONTAINING MORE THAN 10% ETHANOL, PREMIUM GASOLINE, OR WHITE GAS BECAUSE ENGINE FUEL SYSTEM DAMAGE COULD RESULT.

DO NOT USE FUEL ADDITIVES OTHER THAN THOSE MANUFACTURED FOR FUEL STABILIZATION DURING STORAGE SUCH AS TORO'S STABILIZER/CONDITIONER OR A SIMILAR PRODUCT. TORO'S STABILIZER/CONDITIONER IS A PETROLEUM DISTILLATE BASED CONDITIONER/STABILIZER. TORO DOES NOT RECOMMEND STABILIZERS WITH AN ALCOHOL BASE SUCH AS ETHANOL, METHANOL OR ISOPROPYL. ADDITIVES SHOULD NOT BE USED TO TRY TO ENHANCE THE POWER OR PERFORMANCE OF MACHINE.

Note: Do not mix gasoline and oil in the product fuel tank. Oil that is at room temperature mixes easier and more thoroughly than cold oil.

50:1 GAS/OIL Mixing Chart

U.S. GALLON	
Gasoline	**Oil**
1 gallon	2.6 oz.
1.5 gallons	3.9 oz.
2 gallons	5.2 oz.

PROTOTYPE

Operation

Starting/Stopping Engine (Fig. 5)

1. CONTROLS—Key switch, primer, electric start button*, and recoil starter are located on the control panel. The choke lever is just below the lower left corner of the control panel.

2. Turn key to ON and move choke lever to ON (far right position).

3. Cover hole in center of primer with thumb and push primer twice slowly (1 to 2 seconds per prime) for temperatures above 0°F (–18°C). Push primer slowly three times for temperatures below 0°F (–18°C). **DO NO NOT PRIME IF THE ENGINE HAS BEEN RUNNING AND IS HOT**

   Note: When starting engine for first time or after running out of fuel, more priming may be required to start engine.

4. STARTING

   A. RECOIL STARTING—Hold snowthrower with one hand and pull recoil starter vigorously with other hand. If engine does not start after three pulls, push primer once more and pull recoil starter vigorously again.

   B. ELECTRIC STARTING—Connect extension cord to snowthrower and standard household power outlet. Push starter button. When engine starts, disconnect extension cord from snowthrower and outlet.

   IMPORTANT: Excessive running of the electric starter could damage the starter due to overheating. If you are having difficulty starting the engine, ONLY TRY THIS STARTING PROCEDURE TWICE. Run the electric starter no more than 10 times at intervals of 5 seconds ON, 5 seconds OFF. If engine does not start after this first attempt, wait more than 40 minutes to allow starter to cool before trying to run starter again. Before repeating engine starting procedure, check that ignition key switch is ON, and make sure there is fresh fuel in fuel tank. If engine still will not start after a second attempt, bring the snowthrower to an Authorized Toro Service Dealer for servicing.

5. When engine starts, move choke lever to middle position after a few seconds of running time. After engine has warmed up, move choke lever to OFF (far left) position.

6. TO STOP ENGINE—Turn key to OFF, and wait for all moving parts to stop before leaving operator's position.

Operating Tips (Fig. 6)

⚠ WARNING

POTENTIAL HAZARD
- **When engine is running, discharge rotor is turning.**

WHAT CAN HAPPEN
- **Objects thrown from discharge chute can cause personal injury.**

HOW TO AVOID THE HAZARD
- **Keep yourself and other people away from discharge opening when engine is running.**
- **Before leaving operating position, stop engine by turning key to OFF.**

PROTOTYPE

1. **ADJUSTING DISCHARGE CHUTE** — Move the chute handle left and right to adjust the direction of the snow stream. Rotate the chute deflector handle on top of the discharge chute forward and backward to adjust the height of the snow stream. Do not overtighten the chute deflector mounting nuts so excessive force is required to adjust the deflector.

2. **SELF–PROPELLING ACTION** — The snowthrower clears down to the ground and propels itself forward when the handle is raised and the snowthrower is tilted **slightly** forward so

rotor blades strike the ground. The wheels do not have to touch the ground in order to self-propel. The further you tilt the handle forward, the faster the snowthrower self-propels. However, depth and height of snow affects forward speed. Always overlap each swath and discharge downwind when possible.

Note: If snowthrower is tilted too far forward, it will self–propel at a rapid rate and snow will spray back at the feet of the operator. Reduce lift on handle slightly to self–propel at a moderate rate.

3. Keep the area to be cleared free of stones, toys, or other foreign objects which may be picked up and thrown by the rotor blades. Such items could be covered by snowfall and, therefore, unnoticed until struck by the rotor blades. Always be sure to keep all people and pets away from area of operation to prevent possibility of being hit by thrown objects.

4. **ON STEPS OR CUTTING THROUGH DRIFTS**— It is recommended that operator stand on **right** side of snowthrower and hold it by upper handle and chute handle (standing on left side may expose operator to engine exhaust). Use a side–to–side sweeping motion to clear snow.

5. It is not recommended that snowthrower be used on gravel or crushed rock driveways or walks. Should you find it necessary to clear snow from crushed rock or gravel, push down on handle to raise rotor blades clear of loose material that could be thrown by the blades and push unit forward.

6. In some snow and cold weather conditions, some controls and moving parts may freeze solid. **DO NOT USE EXCESSIVE FORCE WHEN TRYING TO OPERATE FROZEN CONTROLS.** When any control or part becomes hard to operate, start the engine and let it run for a few minutes. If control or part still will not move with moderate force, stop engine, remove ice or thaw out snowthrower.

⚠ WARNING

POTENTIAL HAZARD
- **Gasoline and its fumes are highly flammable, explosive, and dangerous if inhaled.**

WHAT CAN HAPPEN
- **If gasoline contacts a flame or is inhaled, serious personal injury can occur.**

HOW TO AVOID THE HAZARD
- **Never warm up snowthrower with fuel in tank inside a building where open flame or sparks are present.**
- **Never store snowthrower in house (living area), basement or anywhere open flame is present.**

7. AFTER CLEARING SNOW—Let engine run for a few minutes so ice does not freeze moving parts solid. After engine is shut off, wipe ice and snow off entire unit.

IMPORTANT: STORE SNOWTHROWER IN OPERATING POSITION ON ITS WHEELS OR HANG ON A WALL BY ITS HANDLE. TIPPING OR STORING UNIT FORWARD ONTO FRONT HOUSING MAY CAUSE HARD STARTING.

PROTOTYPE

Folding Snowthrower (Fig. 7)

The CCR POWERLITE® folds compactly for easy transporting or storage. To fold up snowthrower, follow these instructions:

⚠ WARNING

POTENTIAL HAZARD

- **Gasoline and its fumes are highly flammable, explosive, and dangerous if inhaled.**

WHAT CAN HAPPEN

- **If gasoline contacts a flame or is inhaled, serious personal injury can occur.**

HOW TO AVOID THE HAZARD

- **Always remove gasoline from snowthrower fuel tank before transporting in a closed car trunk or vehicle; refer to Draining Gasoline, page 10.**

1. Remove knob from rear of discharge chute.
2. Fold chute down. Reinstall knob tightly onto bolt at rear of discharge chute handle to prevent losing it.
3. Loosen knobs on handle and fold handle down over unit.
4. Carry unit by discharge chute handle.
5. Be sure to tighten all knobs **SECURELY** after unfolding handle and chute.

Maintenance

Keep snowthrower in safe operating condition by cleaning the unit. Check and tighten any loose nuts, bolts, knobs, and screws. The scraper, drive belt, rotor blades, and spark plug should be checked once a year.

PROTOTYPE

Draining Gasoline

1. Stop engine. Remove key from switch.
2. Remove cap from fuel tank and use a pump type syphon to drain fuel into a clean, approved fuel container.
3. After fuel is drained, start engine and let it run until all fuel is consumed and engine stops. Repeat the starting procedure two more times to assure all fuel is removed from the engine.

   Note: This is the only procedure recommended for draining fuel because it allows all fuel to be removed from fuel tank.

Replacing Rotor Blades

Before each snow season, inspect rotor blades for wear. When blade edge has worn to the wear indicator hole (Fig. 8), the blades must be replaced to assure proper performance and prevent damage to underside of snowthrower. Always replace both blades at the same time.

Note: Whenever rotor blades are replaced, scraper should also be replaced to ensure proper snowthrower operation and performance.

1. Stop engine. Remove key from switch. Pull wire off spark plug.

Removing Old Blade

1. Remove (4) torx screws (Bit No. T27), (2) capscrews, and (6) locknuts securing blade to rotor shaft assembly.
2. Slide the blade out from between the blade support (Fig. 9).

Installing New Blade

1. The rotor blades are made of laminated rubber. Examine the edge of a blade to see the difference in layer thicknesses (Fig. 9).

   Both blades must be installed with the thick layer on the **inside** of the curve, and the wear indicator holes must be on the drive belt cover

side (Fig. 9). If one of the blades is installed with the thick layer on the outside of the curve and the other blade installed with the thick layer on the inside of the curve, the blades will be unbalanced, causing the snowthrower to “hop” or “bounce.”

2. Insert new blade between blade supports. Secure center of blade to blade supports with (2) capscrews and (2) locknuts. Position screw heads on thick layer side of blade. Curve blade and secure it with remaining (4) torx screws and locknuts (position screw heads on thick layer side of blade). Tighten all screws and nuts securely.

3. Repeat steps 1–4 to replace other blade.

Replacing Scraper

Before each season, inspect scraper for wear. When wear indicator groove is worn away (Fig. 10), replace scraper to prevent damage to underside of snowthrower.

1. Stop engine. Remove key from switch. Pull wire off spark plug.

2. Tip snowthrower forward onto front housing.

3. Remove (3) screws holding scraper in place (Fig. 11). Remove scraper.

4. Secure new scraper to housing with (3) screws.

Replacing Drive Belt

After extended use, drive belt may wear and require replacement. If drive belt continues to slip under a heavy load or the rotor does not turn, check to see if belt is severely worn.

1. Stop engine. Remove key from switch. Pull wire off spark plug.

2. Remove (3) self tapping screws, (1) capscrew, (1) washer, and (1) nut securing left side cover to snowthrower frame (Fig. 12). Remove cover.

3. REMOVING BELT (Fig. 13)—Pull idler pulley up slightly while pulling out on belt. Allow pulley to gradually release when it can move past the belt. Rotate rotor with left hand and work belt off rotor pulley with right hand. Belt then slides easily off drive pulley.

4. INSTALLING BELT (Fig. 14)—Loop belt around drive pulley. While holding belt with right hand, slip belt onto rotor pulley and rotate rotor with left hand until belt is completely on rotor pulley. Make sure long end of idler spring is hooked in housing notch and round end of spring is hooked on pin on back of idler pulley. Lift up idler pulley arm assembly, squeeze belt together, and route belt under idler pulley.

5. Reinstall left side cover. Tighten fasteners securely, but DO NOT OVERTIGHTEN.

Replacing Spark Plug

Check spark plug yearly or every 100 operating hours. If electrodes in center of plug are dark or have deteriorated, install a new plug. Use a Champion RCJ8Y spark plug or equivalent and set gap at .030” (.76 mm).

1. REMOVE CONTROL PANEL (Fig. 15)—Remove (2) screws securing control panel to housing. Remove ignition key and lift off panel, allowing it to hang on recoil rope.

2. REMOVE SPARK PLUG (Fig. 16)—Pull wire off spark plug and remove plug. Examine the plug and replace if cracked, fouled, or dirty. **DO NOT SANDBLAST, SCRAPE, OR CLEAN SPARK PLUG BECAUSE DIRT MAY RELEASE AND FALL INTO CYLINDER CAUSING ENGINE DAMAGE.**

3. INSTALL SPARK PLUG—Set air gap (Fig. 17) between electrodes at .030” (.76 mm). Install plug and tighten to 15 ft–lb (20.4 N·m). If torque wrench is not used, tighten plug firmly with wrench by hand; **DO NOT OVERTIGHTEN**. Push wire onto spark plug and reinstall control panel.

PROTOTYPE

Storage

1. FUEL SYSTEM PREPARATION–

Note: A fuel stabilizer/conditioner is most effective when mixed with fresh gasoline.

- Add Toro Stabilizer/Conditioner to the fuel tank (one ounce per gallon of fuel).
- Run engine for ten minutes to distribute conditioned fuel through fuel system.
- Stop engine, allow it to cool, and drain fuel tank or run engine until it stops.
- Restart the engine again and run it until it stops.
- Either choke or prime the engine, restart it a third time and run engine until it will not restart.
- Dispose of fuel properly. Recycle per local codes.
- **DO NOT store STABILIZED gasoline over 90 days.**

2. CYLINDER/PISTON CARE—Slowly pull recoil starter until resistance is felt due to compression pressure, then stop. Release starter tension slowly to prevent engine from reversing due to compression pressure. This position closes both the intake and exhaust ports which prevents corrosion of the cylinder bore.

3. TIGHTEN FASTENERS AND CLEAN—Tighten screws, bolts, knobs and nuts if necessary. Repair or replace damaged parts. Clean unit thoroughly.

4. STORE SNOWTHROWER—Cover snowthrower and store in a clean, dry place out of the reach of children. **NEVER STORE SNOWTHROWER IN HOUSE (LIVING AREA) OR BASEMENT WHERE IGNITION SOURCES MAY BE PRESENT SUCH AS HOT WATER AND SPACE HEATERS, CLOTHES DRYERS, AND THE LIKE BECAUSE GASOLINE AND FUMES ARE HIGHLY FLAMMABLE, EXPLOSIVE, AND DANGEROUS IF INHALED.** Allow engine to cool before storing in any enclosure.

If you have a general understanding of internal combustion engines and wish to repair and service your engine yourself, refer to the Warranty and Repair section in your engine owner's manual for information on how to obtain a "MECHANICS HANDBOOK."

PROTOTYPE

Gas Powered
Snow
Products

THE TORO TOTAL COVERAGE GUARANTEE

A Full Two-Year Warranty
(Limited Warranty for Commercial Use)

What Is Covered By This Express Warranty?

The Toro Company promises to repair any TORO Product used for normal residential purposes* if defective in materials or workmanship for a period of two years from the date of purchase. For single stage snowthrowers, the cost of parts and labor is included, but the customer pays the transportation costs.

Transportation within a 15 mile radius of the servicing dealer is covered under this warranty for two-stage snowthrowers.

What Products Are Covered By This Warranty?

This warranty applies to all gasoline powered snow products.

How About Commercial Use?

TORO Consumer Products used for commercial, institutional or rental use are covered by a limited warranty for 45 days from the date of purchase.

How Do You Get Warranty Service?

Should you feel your TORO Product contains a defect in material or workmanship, contact the dealer who sold you the product or any Authorized TORO Service Dealer or TORO Master Service Dealer. The Yellow Pages of your telephone directory is a good reference source. The dealer will either arrange service at his/her dealership or recommend another Authorized Service Dealer who may be more convenient. You may need proof of purchase (copy of registration card, sales receipt, etc.) for warranty validation.

If for any reason you are dissatisfied with the Service Dealer's analysis of the defect in materials or workmanship or if you need a referral to a TORO Service Dealer, please feel free to contact us at the following address:

Toro Customer Service Department
8111 Lyndale Avenue South
Bloomington, MN 55420−1196
612−888−8801
800−348−2424

What Must You Do To Keep The Warranty In Effect?

You must maintain your TORO Product by following the maintenance procedures described in the operator's manual. Such routine maintenance, whether performed by a dealer or by you, is at your expense.

What Does This Warranty Not Cover? and How Does Your State Law Relate To This Warranty?

There is no other express warranty except for special emission system coverage on some products and the TORO Starting Guarantee on GTS Engines. This express warranty does not cover:

- Cost of regular maintenance service or parts, such as filters, fuel, lubricants, tune-up parts, blade sharpening, brake and clutch adjustments.

- Any product or part which has been altered or misused or required replacement or repair due to normal wear, accidents, or lack of proper maintenance.

- Repairs necessary due to improper fuel, contaminants in the fuel system, or failure to properly prepare the fuel system prior to any period of non-use over three months.

- Pickup and delivery charges for distances beyond a 15 mile radius from an Authorized TORO Service Dealer (covered products only).

All repairs covered by this warranty must be performed by an Authorized TORO Service Dealer using Toro approved replacement parts.

Repair by an Authorized TORO Service Dealer is your sole remedy under this warranty.

The Toro Company is not liable for indirect, incidental or consequential damages in connection with the use of the TORO Products covered by this warranty, including any cost or expense of providing substitute equipment or service during reasonable periods of malfunction or non−use pending completion of repairs under this warranty. Some states do not allow exclusions of incidental or consequential damages, so the above exclusion may not apply to you.

This warranty gives you specific legal rights, and you may also have other rights which vary from state to state.

* Normal residential purposes means removing snow on the same lot as your home. Use at more than one location is considered commercial use and the commercial use warranty would apply.

PROTOTYPE

COUNTRIES OTHER THAN THE UNITED STATES OR CANADA

Customers who have purchased TORO Products exported from the United States or Canada should contact their TORO Distributor (Dealer) to obtain guarantee policies for your country, province, or state. If for any reason you are dissatisfied with your Distributor's service or have difficulty obtaining guarantee information, contact the TORO importer. If all other remedies fail, you may contact us at The Toro Company.

Rev. 7/2/97