FORM NO. 3319–574

TORO®

ProLine 21” Recycler®

Walk-behind Power Mower

Model No. 22160 — 8900001 & Up
Model No. 22161 — 8900001 & Up

Operator’s Manual

WARNING:

The engine exhaust from this product contains chemicals known to the State of California to cause cancer, birth defects, or other reproductive harm.

Maintenance, replacement or repair of the emission control devices and systems may be performed by any nonroad engine repair establishment or individual. However, to obtain no charge repairs under the terms and provisions of the Toro warranty statement, any service or emission control part repair or replacement must be performed by a factory authorized dealer.

Figures

1

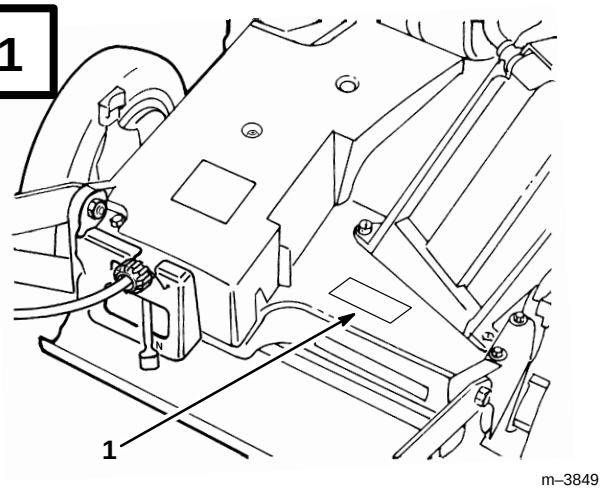

m–3849

English

1. Model and serial number decal

2

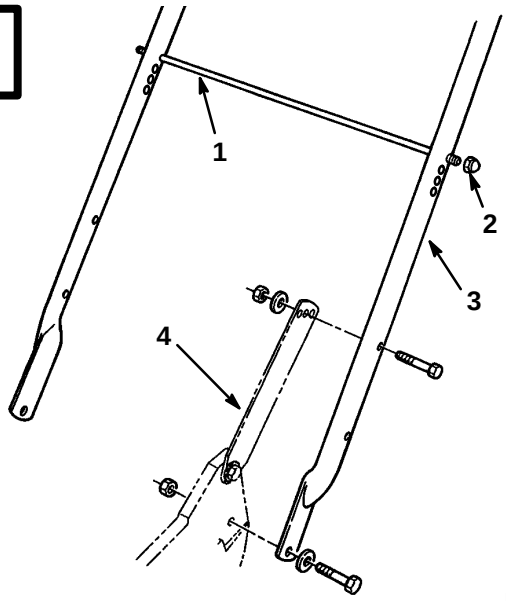

m–3850

English

1. Bag support rod
2. Cap locknut
3. Handle
4. Handle latch

3

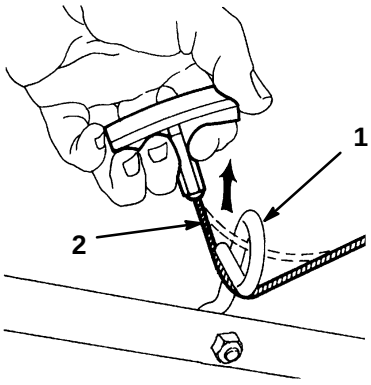

m–210

English

1. Rope guide
2. Starter rope

4

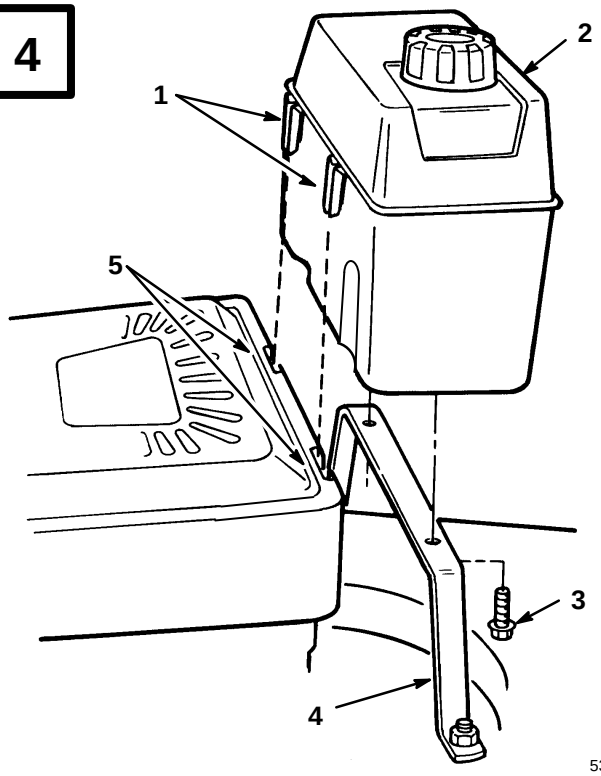

530

English

1. Plastic clips
2. Gas tank
3. Self-tapping screw
4. Tank bracket
5. Slots

Printed in USA

©The Toro Company – 1997
All Rights Reserved

5

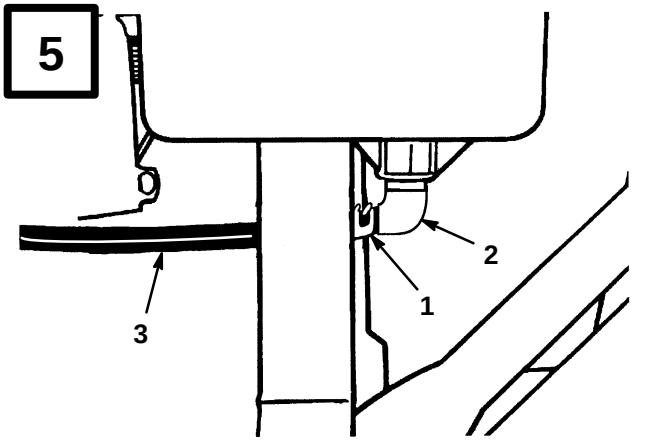

2045

English

1. Fuel line clamp
2. Elbow fitting
3. Fuel line

6

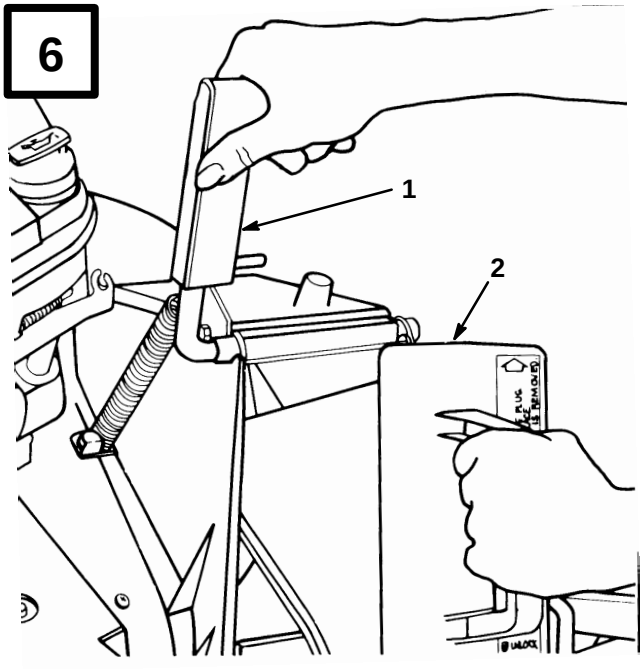

m–262

English

1. Discharge door handle
2. Plug tilted clockwise

7

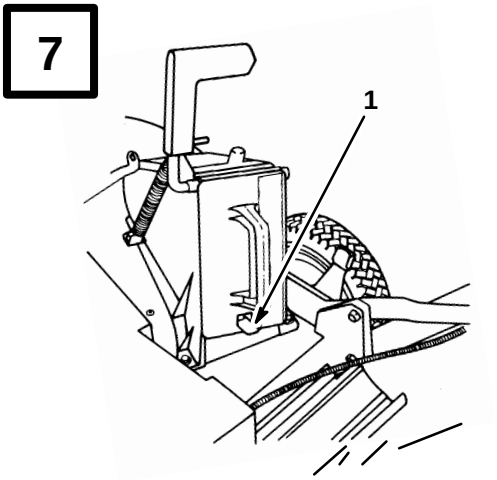

m–275

English

1. Spring clip

8

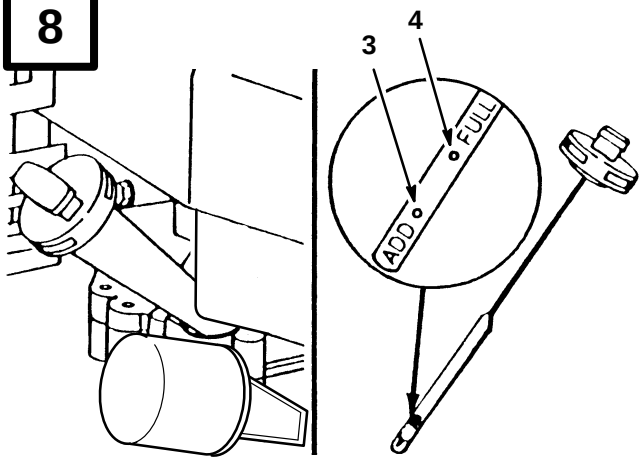

m–3845

English

1. Oil fill tube
2. Dipstick
3. ADD mark
4. FULL mark

9

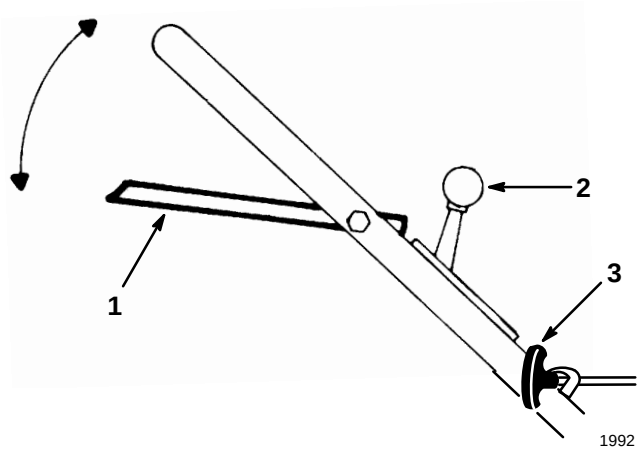

1992

English

1. Control bar
2. Throttle
3. Fingertip starter

10

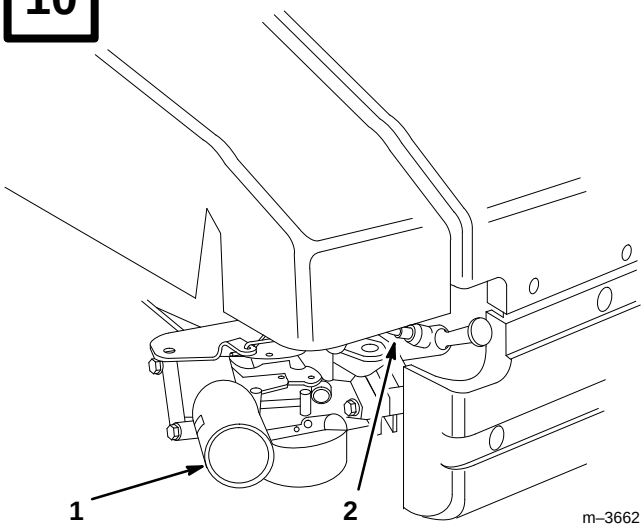

m–3662

English

1. Primer
2. Spark plug wire

11

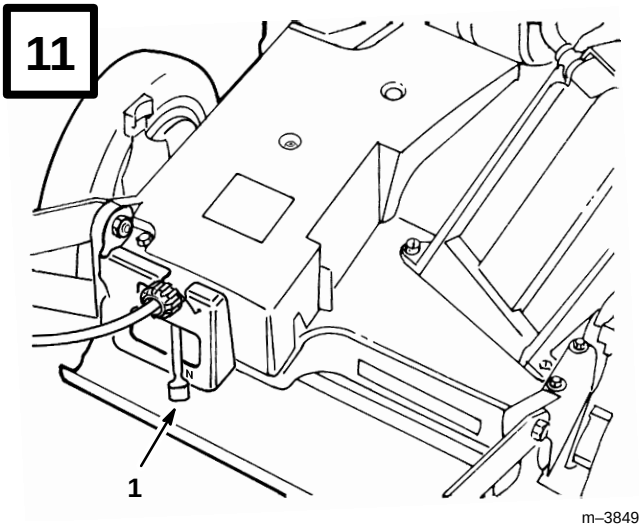

m–3849

English

1. Ground speed control

12

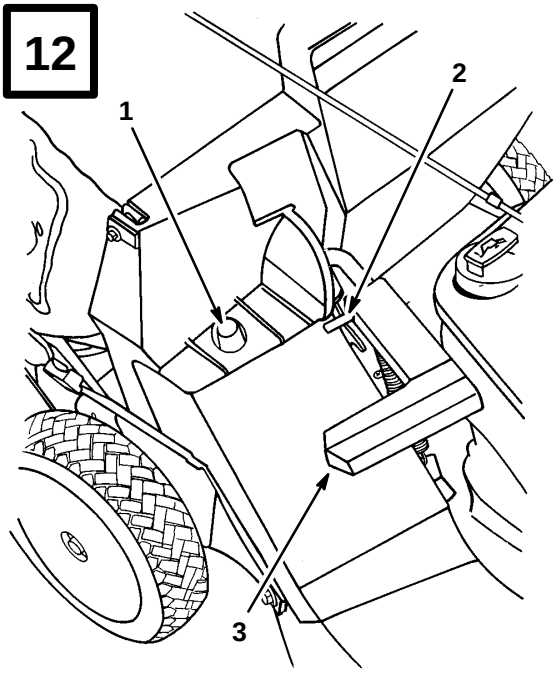

m–261

English

1. Bag frame on retaining post
2. Pin engaged in catch
3. Handle fully forward — discharge door closed

13

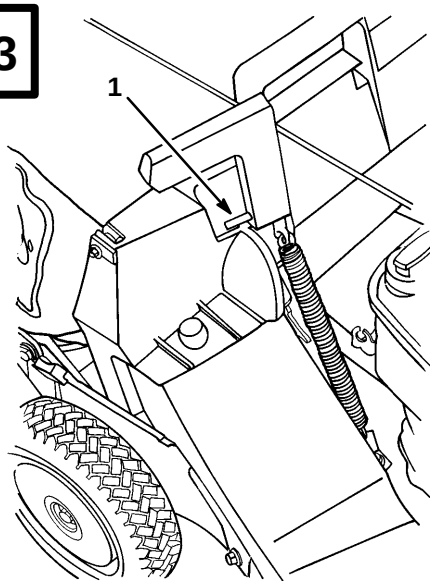

English

1. Pin locked in bag notch

14

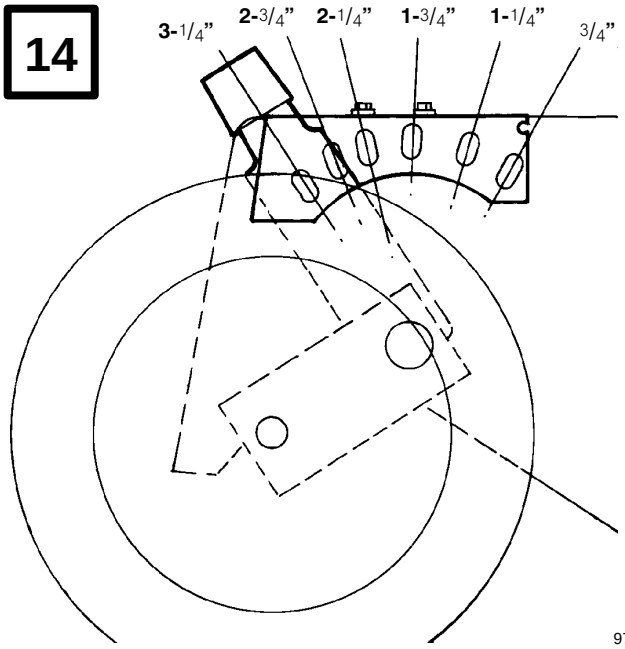

15

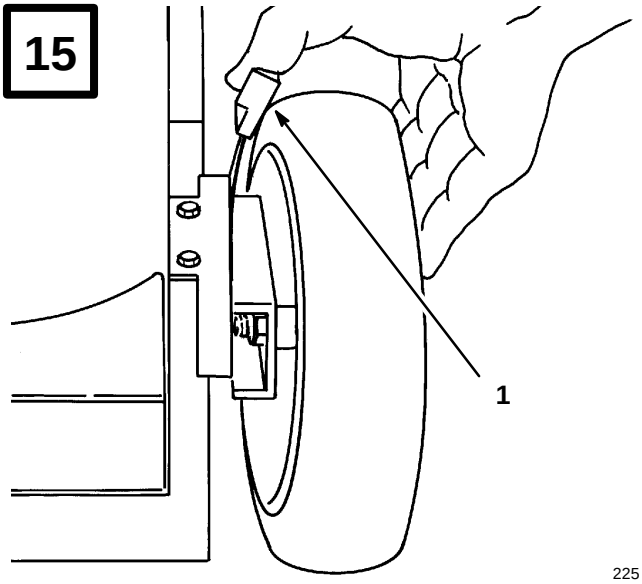

English

1. Height-of-cut adjuster

16

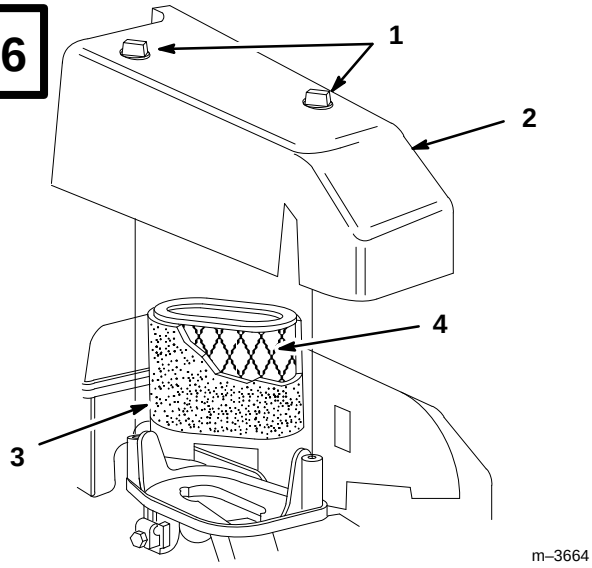

English

1. Knob
2. Cover
3. Foam pre–cleaner
4. Paper cartridge

17

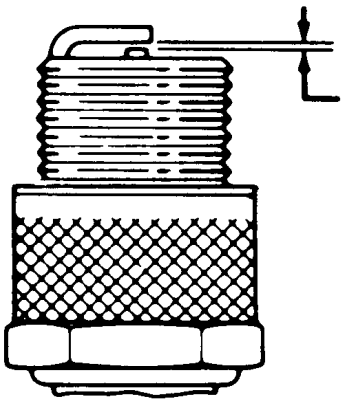

18

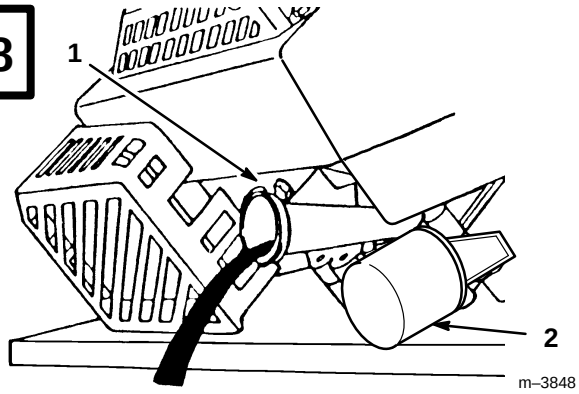

English

1. Oil fill tube
2. Oil filter

19

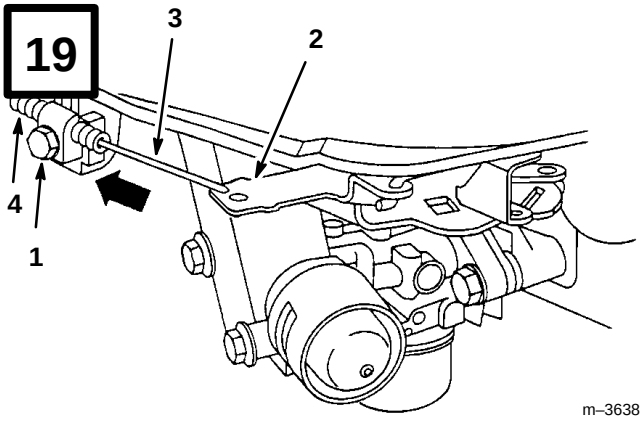

English

1. Cable clamp screw
2. Governor control lever
3. Throttle cable
4. Casing

20

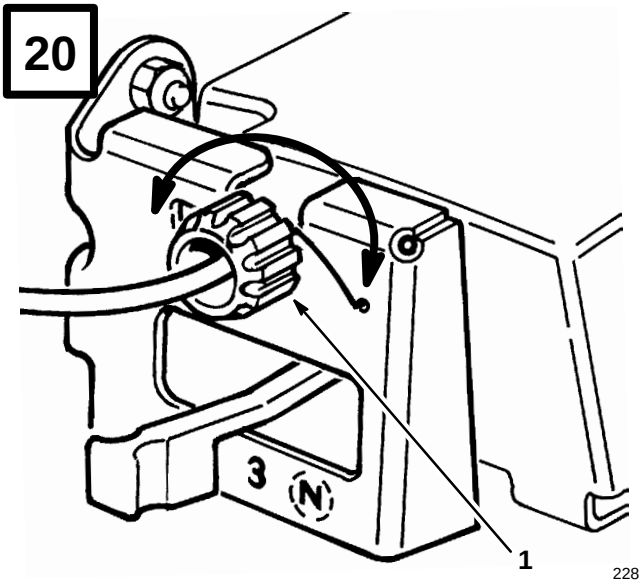

English

1. Control knob

21

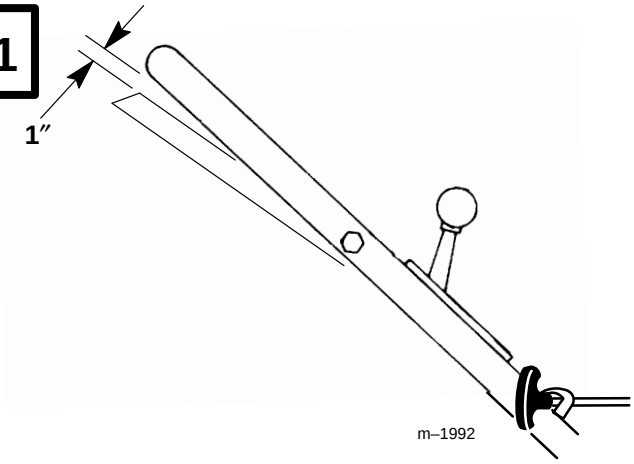

22

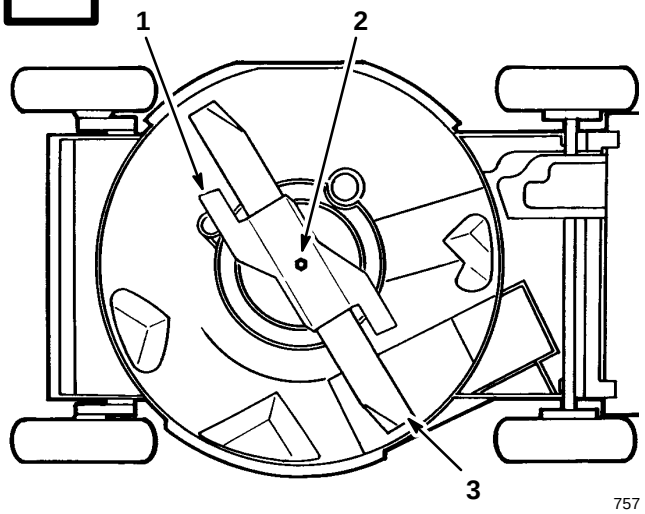

757

English

1. Blade accelerator
2. Bolt and lockwasher
3. Blade

23

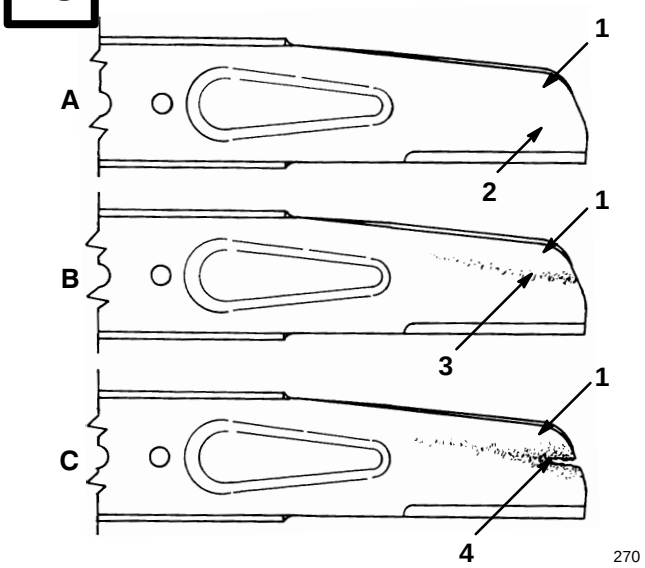

270

English

1. Sail
2. Flat part of blade
3. Wear
4. Slot formed

24

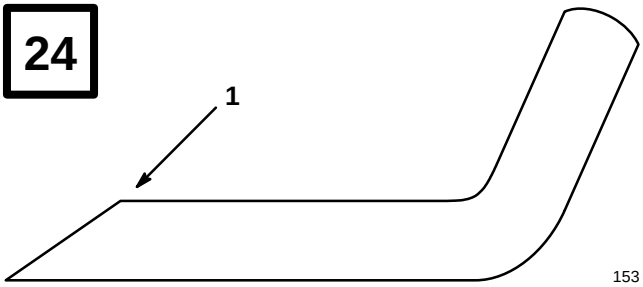

153

English

1. Sharpen at this angle only

25

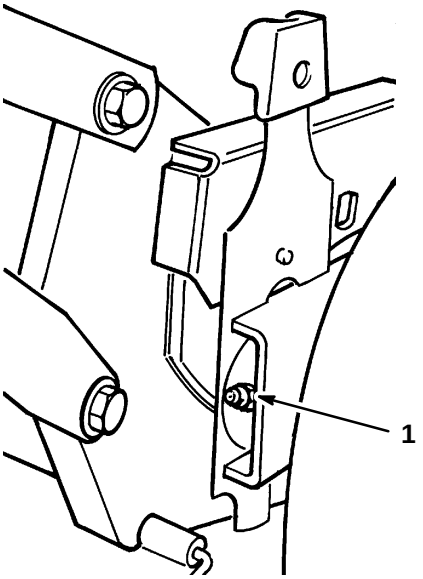

232

English

1. Grease fitting

26

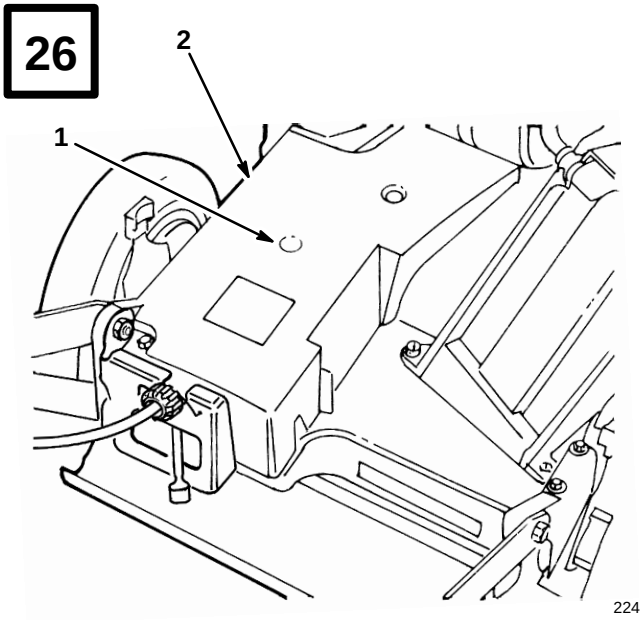

English

1. Grease fitting
2. Belt cover

27

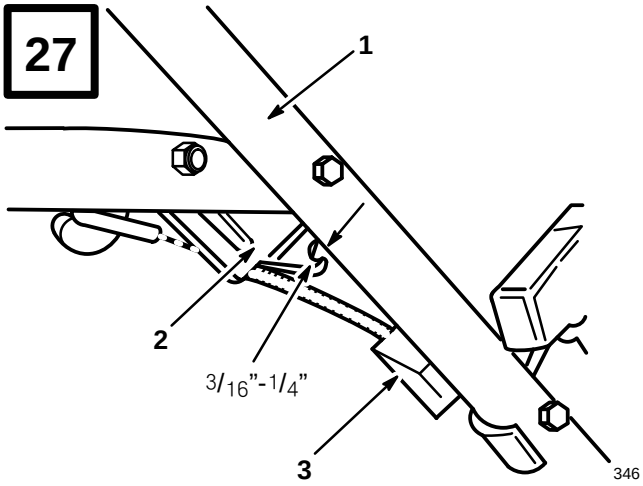

Self-propelled model

English

1. Handle
2. Brake lever
3. Cable bracket

28

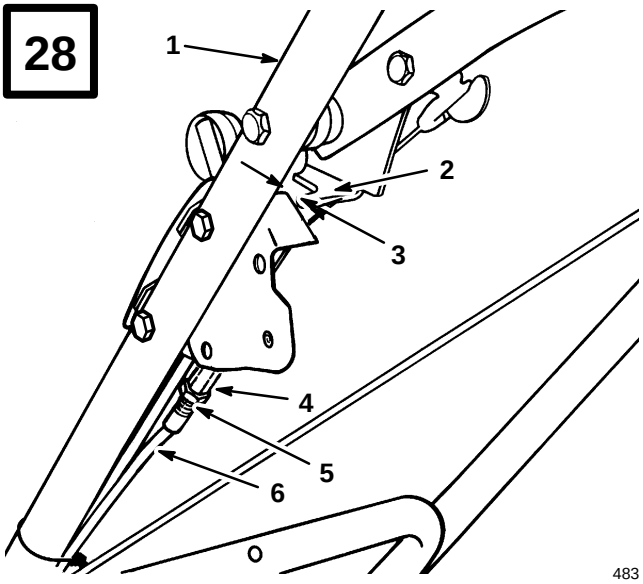

Hand Push model

English

1. Handle
2. Brake lever
3. 3/16"-1/4"
4. Cable adjuster
5. Jam nut
6. Cable conduit

29

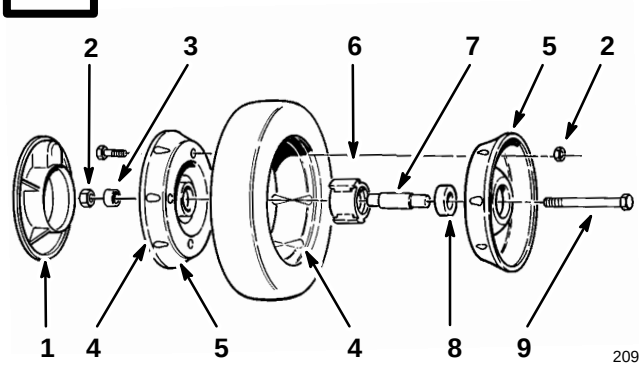

English

1. Plastic cover (rear wheels only)
2. Locknuts
3. Wheel spacer
4. Lug
5. Wheel half
6. Bearing/hub assembly
7. Bearing spacer
8. Bearing (2)
9. Capscrew

30

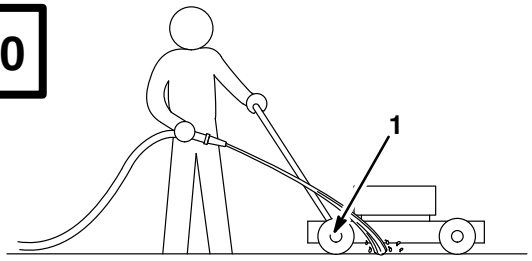

English

1. Right rear wheel

31

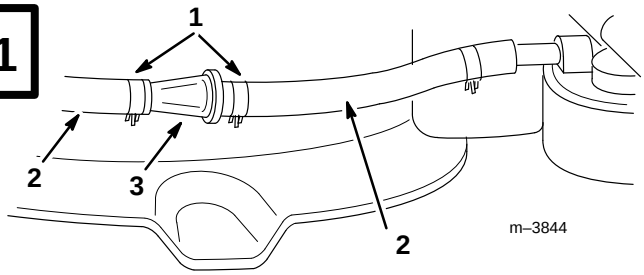

English

1. Hose clamp
2. Fuel line
3. Filter

32

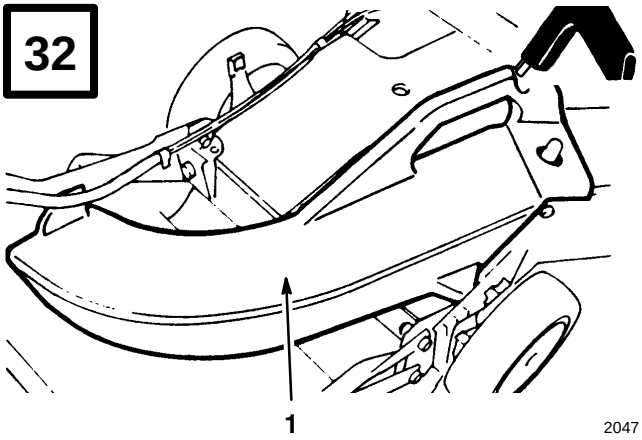

English

1. Side discharge chute

English

Contents

	Page
Introduction	1
Safety	1
Safe Operating Practices	2
General Operation	2
While Operating	3
Maintenance And Storage	4
Safety and Instruction Decals	5
Assembly	6
Install Handle	6
Install Gas Tank	6
Install Discharge Tunnel Plug	6
Before Starting	6
Oil	6
Gasoline	7
Operation	8
Operating Tips	8
Starting and Stopping	8
Using Discharge Tunnel Plug	8
Using Grass Bag	8
Adjusting Height-of-Cut	9
Recycling Tips	10
Maintenance	11
Servicing Air Cleaner	11
Replacing Spark Plug	11
Draining Gasoline	12
Changing Crankcase Oil and Filter	12
Adjusting Throttle	12
Cleaning Cooling System	12
Adjusting Wheel Drive	12
Inspecting, Removing, Sharpening Blade	13
Lubrication	14
Lubricating Gear Case	14
Adjusting Blade Brake Cable	14
Servicing Wheels	14
Cleaning Mower	15
Fuel Filter	16
Storage	16
Accessories	17
Federal and California Emission Control Warranty Statement	19
THE TORO PERFORMANCE WARRANTY	22

Introduction

Thank you for purchasing a Toro product.

All of us at Toro want you to be completely satisfied with your new product, so feel free to contact your local Authorized Service Dealer for help with service, genuine Toro parts, or other information you may require.

Whenever you contact your Authorized Service Dealer or the factory, always know the model and serial numbers of your product. These numbers will help the Service Dealer or Service Representative provide exact information about your specific product. You will find the model and serial number decal located in a unique place on the product (Fig. 1).

For your convenience, write the product model and serial numbers in the space below.

Model No: _____

Serial No. _____

Safety

Read this manual carefully to learn how to operate and maintain your product correctly. Reading this manual will help you and others avoid personal injury and damage to the product. Although Toro designs, produces and markets safe, state-of-the-art products, you are responsible for using the product properly and safely. You are also responsible for training persons who you allow to use the product about safe operation.

The Toro warning system in this manual identifies potential hazards and has special safety messages that help you and others avoid personal injury, even death.

DANGER, WARNING and CAUTION are signal words used to identify the level of hazard. However, regardless of the hazard, be extremely careful.

DANGER signals an extreme hazard that will cause serious injury or death if the recommended precautions are not followed.

WARNING signals a hazard that may cause serious injury or death if the recommended precautions are not followed.

CAUTION signals a hazard that may cause minor or moderate injury if the recommended precautions are not followed.

Two other words are also used to highlight information. “Important” calls attention to special mechanical information and “Note” emphasizes general information worthy of special attention.

The left and right side of the machine is determined by standing behind the handle in the normal operator’s position.

This machine meets or exceeds CPSC blade safety requirements for walk-behind rotary mowers and the B71.4–1990 specifications of the American National Standards Institute, in effect at time of production. However, improper use or maintenance by the operator or owner can result in injury. To reduce the potential for injury, comply with these safety instructions and always pay attention to the safety alert ⚠ symbol which means CAUTION, WARNING or DANGER—“personal safety instruction.” Failure to comply with the instruction may result in personal injury.

Safe Operating Practices

This product is capable of amputating hands and feet and throwing objects. Always follow all safety instructions to avoid serious injury or death.

This mower is designed for cutting and recycling grass or, when equipped with a grass bag, for catching cut grass. Any use for purposes other than these could prove dangerous to user or bystanders.

Note: This engine is NOT equipped with a spark arrester muffler. Use or operation of this mower in the State of California on any forest-covered, brush-covered or unimproved grass-covered land, without an approved spark arrester muffler, is a violation of the law. Other states may have similar laws.

General Operation

1. Read this manual carefully before operating the mower. Become familiar with the controls and proper use of the mower. Never allow children under 16 years of age to operate the mower. Never allow adults to operate mower without proper instructions.

2. The operator of the mower is responsible for keeping everyone, especially children and pets, away from area of operation. The operator is responsible for accidents or hazards occurring to other people or their property.

3. Thoroughly inspect area where mower will be used and remove sticks, stones, wire, and debris that could be picked up and thrown by mower. Watch for foreign objects while mowing.

4. Wear long pants and substantial shoes. Do not operate mower while wearing open-toed shoes, jewelry, loose clothing or when barefoot.

5. Check fuel level before starting engine. Because fuel is highly flammable, handle it carefully.

A. Use an approved fuel container.

B. Fill fuel tank outdoors, not indoors. NEVER ADD FUEL TO AN ENGINE THAT IS RUNNING OR HOT.

C. Install gas cap on fuel container and gas tank, and wipe up any spilled gasoline before starting engine.

D. Do not smoke while refueling.

6. Keep all guards, shields, grass catcher, discharge tunnel plug, optional discharge chute and safety devices in place. Repair or replace damaged parts, including decals. Check all safety devices before each use.

7. Engine, blade and self-propelled drive (self-propelled model) are designed to stop when control bar is released. Ensure control and brake function properly before each use of mower.

8. Disengage the self-propelled mechanism or drive clutch (self-propelled model) before starting the engine.

9. Before using, always visually inspect to see that the blades, blade fasteners and cutter assembly are not worn or damaged. Replace worn or damaged blades and fasteners in sets to preserve balance.

While Operating

1. Do not run engine indoors.

2. Start the engine carefully according to instructions and with feet well away from the blade.

3. Always maintain secure footing. Keep a firm grip on the handle and walk; never run. Never operate mower in wet grass. Mow only in daylight or in good artificial light.

4. Mow across the face of slopes; never up and down. Use extreme caution when changing direction on slopes. Do not mow excessively steep slopes. Wear skid resistant shoes on slopes.

5. Always wear safety glasses or eye shields during operation to protect eyes from foreign objects that may be thrown from the machine. Wearing of hearing protection, protective gloves and a safety helmet is advisable and may be required by local regulations.

6. Keep face, hands, and feet away from the mower housing and cutter blade when the engine is running. Blade can cause injury to hands and feet. Stay behind the handle until the engine stops.

7. When bagging grass, stop engine and ensure discharge door is closed before removing and emptying bag.

8. Stop the engine and wait for all moving parts to stop before unclogging discharge tunnel, removing grass bag or discharge tunnel plug. Use a stick, not your hand, to unclog discharge tunnel. Never attempt to unclog the tunnel with the engine running.

9. Use extreme caution when reversing or pulling the mower towards you.

10. Since the blade rotates for a few seconds after the control bar is released, stay behind the handle until all moving parts stop.

11. After striking a foreign object or if mower vibrates abnormally, stop engine and remove wire from spark plug. Check mower for damage and make all repairs before using mower again. If major repairs are ever needed or if assistance is desired, contact your local Authorized TORO Service Dealer.

12. Stop the engine and wait for all moving parts to stop before adjusting the height-of-cut.

13. Stop the blade when pushing the mower outside the lawn area.

14. Stop engine before leaving the operator's position—behind the handle. Disconnect wire from spark plug if mower will be unattended.

15. Do not touch engine while it is running or shortly after it is stopped because engine will be hot enough to cause a burn.

16. Refuel only when engine is cool.

17. If mower must be lifted to be transported, turn off engine and stay behind the handle until all moving parts stop. Disconnect spark plug wire.

Maintenance And Storage

1. Perform only those maintenance instructions described in this manual. If major repairs are ever needed or if assistance is desired, contact your local Authorized TORO Service Dealer.

2. Before mower is cleaned, inspected, serviced, or adjusted, stop engine and disconnect wire from spark plug. Keep wire away from plug to prevent accidental starting.

3. To ensure the mower is in safe operating condition, frequently check and keep all nuts, bolts, and screws tight. Ensure blade bolt is tightened to 50 ft–lb (68 N·m).

4. When servicing blade, refer to blade maintenance section for correct installation and servicing procedures.

5. To reduce fire hazard, keep engine free of excessive grease, grass, leaves, and accumulations of dirt.

6. Check grass catcher bag frequently for wear or deterioration. Replace with a new bag for your protection. Check that replacement bags comply with original TORO recommendations or specifications.

7. Allow engine to cool before storing mower in any enclosure. Do not store mower with gasoline in fuel tank near any open flame or where gasoline fumes may be ignited by a spark.

8. Do not overspeed the engine by changing governor settings.

9. At the time of manufacture, the mower conformed to the safety standards in effect for rotary mowers. To assure best performance and continued safety certification of the mower, use genuine TORO replacement parts and accessories. Replacement parts and accessories made by other manufacturers may result in non-conformance with the safety standards, and that could be dangerous.

Safety and Instruction Decals

Safety decals and instructions are easily visible to the operator and are located near any area of potential danger. Replace any decal that is damaged or lost.



ON MOWER HOUSING
(Part No. 39–5770)

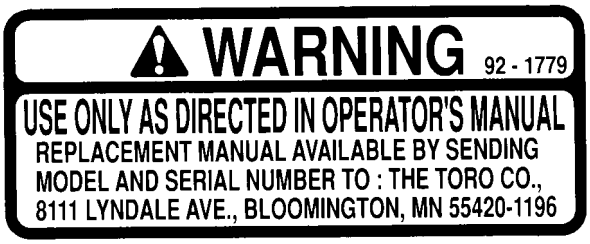

Hand-push model only

ON MOWER DECK
(Part No. 92–1779)

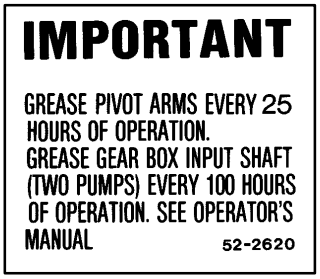

Self-propelled model only

ON BELT COVER
(Part No. 52–2620)



Self-propelled model only

ON CONTROL BAR
(Part No. 98–7116)

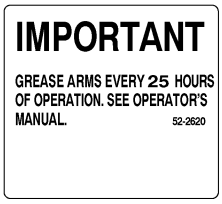

Hand-push model only

ON BELT COVER
(Part No. 52–2610)



Self-propelled model only

ON GEAR BOX
(Part No. 74–1970)



ON MOWER DECK
(Part No. 71–1280)



ON DISCHARGE TUNNEL

Assembly

Install Handle

1. Mount handle to outside of mower housing, using bottom hole, with (2) 5/16–18 x 1–1/4" lg. capscrews, washers, and thin nylon insert locknuts (Fig. 2).

2. Secure handle latches to handle with (2) 5/16–18 x 1–1/2" lg. capscrews, washers and nylon insert locknuts (Fig. 2).

   Note: Handle height is adjustable for operator comfort. Stand behind mower handle to gauge height. To adjust handle height, reposition capscrews and locknuts securing handle latches to handle into other mounting holes in latches.

3. Slide bag support rod thru **top** mounting holes in handle and secure each end with a cap locknut (Fig. 2).

4. Use a cable tie to secure the control cables to left handle below the bag support rod.

5. Pull starter rope through rope guide on handle (Fig. 3).

   Note: To make the rope easier to loop, squeeze the control bar on the handle to release the blade brake.

Install Gas Tank

1. Start self–tapping screws into bottom of gas tank and then remove screws.

2. Hook plastic clips on front of gas tank into slots on rear of engine (Fig. 4).

3. Secure gas tank to tank base with (2) self–tapping screws (Fig. 4). Do not overtighten screws.

4. Remove red cap from end of fuel line and from end of elbow fitting on gas tank. Slide end of fuel line onto elbow fitting (Fig. 5). Secure fuel line in place with fuel line clamp.

Install Discharge Tunnel Plug

1. Open the discharge door by pulling forward on the handle and moving it rearwards (Fig. 6). Hold the discharge door handle to prevent the spring–loaded door from closing while inserting the plug.

2. Since the plug is slightly wider than the discharge tunnel opening, rotate the plug clockwise slightly while inserting it (Fig. 6). Make sure the arrow on the plug decal is pointing upwards.

3. Push the plug all the way in until the spring clip on the bottom of the plug clicks into place, locking the plug securely into the discharge tunnel (Fig. 7). Release discharge door handle to lock top of plug.

Before Starting

Oil

Fill crankcase with SAE 30 oil until oil level reaches FULL mark on dipstick as shown in Figure 8. The maximum crankcase capacity is 26 ounces (0.77 liters) of oil with filter. Use any high quality detergent oil having the American Petroleum Institute (API) "service classification"—SF, SG SH, or SJ.

Before each use or every five hours, ensure oil level is between ADD and FULL marks on dipstick (Fig. 8). Add oil if level is low.

1. Position mower on level surface and clean around oil dipstick.

2. Remove dipstick by rotating cap counterclockwise 1/4 turn (Fig. 8).

3. Wipe dipstick and insert it into filler neck. Rotate cap clockwise 1/4 turn. Then remove dipstick and check level of oil (Fig. 8). If level is

low, add only enough oil to raise level to FULL mark on dipstick. **DO NOT FILL ABOVE FULL MARK BECAUSE ENGINE COULD BE DAMAGED WHEN STARTED. POUR OIL SLOWLY.**

4. Insert dipstick into filler neck and rotate cap clockwise 1/4 turn to lock (Fig. 8).

   Note: Check oil level each time mower is used or after every 5 operating hours. Initially, change oil after the first 5 hours of operation; thereafter, change oil after every 50 hours of operation. More frequent oil changes are required in dusty, dirty or hot conditions.

Gasoline

⚠ DANGER

POTENTIAL HAZARD
- **In certain conditions gasoline is extremely flammable and highly explosive.**

WHAT CAN HAPPEN
- **A fire or explosion from gasoline can burn you, others, and cause property damage.**

HOW TO AVOID THE HAZARD
- **Use a funnel and fill the fuel tank outdoors, in an open area, when the engine is cold. Wipe up any gasoline that spills.**
- **Do not fill the fuel tank completely full. Add gasoline to the fuel tank until the level is 1/4" to 1/2" (6 mm to 13 mm) below the bottom of the filler neck. This empty space in the tank allows gasoline to expand.**
- **Never smoke when handling gasoline, and stay away from an open flame or where gasoline fumes may be ignited by a spark.**
- **Store gasoline in an approved container and keep it out of the reach of children.**
- **Never buy more than a 30-day supply of gasoline.**

This engine is certified to operate on unleaded gasoline. The Toro Company strongly recommends the use of fresh, clean, **UNLEADED** regular grade gasoline with an octane rating of 85 or higher in Toro gasoline powered products. Unleaded gasoline burns cleaner, extends engine life, and promotes good starting by reducing the build-up of combustion chamber deposits. In countries other than U.S.A., leaded gasoline may be used if it is commercially available and unleaded is unavailable.

IMPORTANT: Do not mix oil with the gasoline. Do not use gasoline that has been stored in an approved container from one season to the next.

Toro also recommends that Toro Stabilizer/ Conditioner be used regularly in all Toro gasoline powered products during operation and storage seasons. Toro Stabilizer/Conditioner cleans the engine during operation and prevents gum-like varnish deposits from forming in the engine during periods of storage.

IMPORTANT: Some fuels, called oxygenated or reformulated gasolines, are gasolines blended with alcohols or ethers. Excessive amounts of these blends can damage the fuel system or cause performance problems. Never use methanol, gasoline containing methanol, gasohol containing more than 10% ethanol or white gas because engine fuel system damage could result. If any undesirable operating symptoms occur, use gasoline with a lower percentage of alcohol or ether.

Do not use fuel additives other than those manufactured for fuel stabilization during storage such as Toro's Stabilizer/conditioner or a similar product. Toro's Stabilizer/conditioner is a petroleum distillate based conditioner/stabilizer. Toro does not recommend stabilizers with an alcohol base such as ethanol, methanol or isopropyl. Additives should not be used to try to enhance the power or performance of the machine.

1. Using a clean rag, clean area around the fuel tank cap. Remove cap from fuel tank and fill tank to within 1/2 inch (13 mm) from the top with gasoline. Reinstall fuel tank cap securely.

Operation

Operating Tips

1. CUTTING—Best cutting results are achieved when engine is running at maximum speed and only about 1/3 of the grass blade is cut. If long grass must be cut, use highest height-of-cut setting for first mowing. Then recut the grass at a more normal setting. If too long of grass is cut, mower may plug and cause engine to stall.

2. SHARP BLADE—Begin each cutting season with a sharp blade. Periodically file down nicks.

Starting and Stopping

1. CONTROLS—Throttle control, control bar, and fingertip starter are on upper handle (Fig. 9).

Note: The engine requires a warm-up period of one minute to several minutes, depending on the temperature.

2. Push spark plug wire onto spark plug (Fig. 10).

3. Push primer three (3) times (Fig. 10). Wait about two (2) seconds between each push.

Note: Do not use primer to start a warm engine after a short shutdown. However, cool weather may require priming to be repeated.

4. STARTING—Move ground speed control to Ⓝ NEUTRAL (Fig. 11) and throttle to 🐇 FAST. Lift the control bar (Fig. 9) to handle and hold. Pull fingertip starter (Fig. 9) out until positive engagement results; then pull vigorously to start the engine. When engine starts, regulate throttle as desired (Fig. 9). Allow the engine to warm-up. During warm-up, the equipment can be operated.

5. STOPPING—To stop engine, release control bar and wait for all moving parts to stop. Pull wire off spark plug if mower will be unattended or not used.

Using Discharge Tunnel Plug

1. Make sure engine is off. Open the discharge door by pulling forward on the handle and moving it rearwards (Fig. 6). Hold the discharge door handle to prevent the spring–loaded door from closing while inserting the plug.

2. Since the plug is slightly wider than the discharge tunnel opening, you must rotate the plug clockwise slightly while inserting it (Fig. 6). Make sure the arrow on the plug decal is pointing upwards.

3. Push the plug all the way in until the spring clip on the bottom of the plug clicks into place, locking the plug securely into the discharge tunnel (Fig. 7). Release the discharge door handle to lock the top of the plug.

4. To remove the plug, move the discharge door handle rearwards while at the same time lift up the spring clip on the bottom of the plug. When the plug is unlocked, pull it out of the discharge tunnel.

Note: When grass is thick and lush, clippings may collect on and around the discharge tunnel plug. This may make plug removal difficult. Clean plug thoroughly after each use. Refer to CLEANING MOWER section.

Using Grass Bag

Occasionally you may wish to use the grass bag for bagging extra long grass, lush grass or leaves.

1. Stop engine and wait for all moving parts to stop.

2. Ensure chute door handle is fully forward and pin is engaged in catch (Fig. 12).

3. INSTALLING BAG—Slide hole in bag frame onto retaining post on discharge tunnel (Fig. 12). Set rear of bag frame onto support rod.

⚠ DANGER

POTENTIAL HAZARD
- **Grass clippings and other objects can be thrown from an open discharge tunnel.**

WHAT CAN HAPPEN
- **Objects thrown with enough force could cause serious personal injury or death to operator or bystander.**

HOW TO AVOID THE HAZARD
- **Never open door on discharge tunnel when engine is running unless the grass bag, optional side discharge attachment or discharge tunnel plug is securely installed.**

4. Pull discharge door handle forward until pin clears catch and move handle rearward until pin locks in bag notch (Fig. 13). Discharge door in mower housing is now open.

⚠ DANGER

POTENTIAL HAZARD
- **A worn grass bag could allow small stones and other similar debris to be thrown in operator's or bystander's direction.**

WHAT CAN HAPPEN
- **Thrown objects can cause serious personal injury or death to operator or bystanders.**

HOW TO AVOID THE HAZARD
- **Check the grass bag frequently. If it is damaged, install a new, genuine TORO replacement bag.**

⚠ DANGER

POTENTIAL HAZARD
- **Thrown objects may result if discharge door does not close completely.**

WHAT CAN HAPPEN
- **Thrown objects can cause serious personal injury or death.**

HOW TO AVOID THE HAZARD
- **If discharge door cannot be closed because grass clippings clog discharge area, stop engine and gently move discharge door handle back and forth until door can be closed completely. If door still cannot be closed, remove obstruction with a stick, not your hand.**

5. EMPTYING BAG—Stop engine and wait for all moving parts to stop. Raise discharge door handle and move it forward to engage the locking pin with the catch (Fig. 12). Grasp handles at front and rear of bag and lift bag off mower. Gradually tip bag forward to empty clippings.

6. To reinstall bag, repeat steps 3–4.

Adjusting Height-of-Cut

The height-of-cut is adjustable from approximately 3/4 to 3-1/4 inches (19 mm to 83 mm), in 1/2 inch (12.7 mm) increments (Fig. 14). Moving height-of-cut adjuster forward raises height-of-cut.

1. Stop the engine and wait for all moving parts to stop.

2. For easier adjustment, lift housing up so wheel is off ground. **Do not place hands under deck to lift housing.** Squeeze adjusting lever toward wheel (Fig. 15) and move it to the desired

setting. Assure pin on adjusting lever engages notch in mower housing wear plate. Adjust all wheels to the same setting.

⚠ DANGER

POTENTIAL HAZARD
- **Adjusting height-of-cut levers could bring hands into contact with moving blade.**

WHAT CAN HAPPEN
- **Contact with blade could cause serious personal injury.**

HOW TO AVOID THE HAZARD
- **Stop engine and wait for all moving parts to stop before changing height-of-cut.**
- **Do not put fingers under housing to lift mower when adjusting height-of-cut levers.**

Recycling Tips

General Tips

Follow these instructions whether cutting grass or leaves for the best cutting results and lawn appearance:

- Maintain a **sharp blade** throughout the cutting season. Periodically file down nicks on blade.
- **Only mow dry grass or leaves.** Wet grass and leaves tend to clump on yard and may cause mower to plug or engine to stall. They also may be slippery to walk on and could cause you to slip and fall.

⚠ WARNING

POTENTIAL HAZARD
- **Wet grass or leaves can cause you to slip and contact blade.**

WHAT CAN HAPPEN
- **Blade contact can seriously injure you.**

HOW TO AVOID THE HAZARD
- **Mow only in dry conditions.**

- Set engine speed to fastest position. Maximum horsepower provides best cutting results.
- Clean clippings or leaves from underside of mower deck after each mowing.
- Keep engine in good running condition. Cutting and recutting requires more horsepower.
- Clean air filter more frequently. Cutting and recutting stirs up more clippings and dust which clogs the air filter and reduces engine performance.

Cutting Grass

- Grass grows at different rates at different times of the year. In the heat of the summer, it is generally best to cut grass at the 1-3/4", 2-1/4" or 2-3/4" height-of-cut settings (Fig. 14). Only about 1/3 of the grass blade should be cut off. Cutting below the 1-3/4" setting is not recommended unless grass is sparse or it is late fall when grass growth begins to slow down.
- When cutting grass over six inches tall, you may want to first mow using the highest height-of-cut setting and a slower walking speed; then mow again at a lower setting for best lawn appearance. If grass is too long and leaves clumps on top of lawn, mower may plug and cause engine to stall.
- Alternate mowing direction. This helps disperse clippings over lawn for even fertilization.

If the finished cut lawn appearance is unsatisfactory, try one or more of the following:

- Sharpen the blade.
- Walk at a slower pace while mowing.
- Raise the height-of-cut setting on your mower.
- Cut grass more frequently.
- Overlap cutting swaths instead of cutting a full swath with each pass.
- Mow across the marginal areas a second time.
- Set height-of-cut on front wheels one notch lower than rear wheels. (example: set front wheels at 1-3/4" setting and rear wheels at 2-1/4" setting)

Cutting Leaves

- When cutting is complete, always be sure that 50% of the lawn shows through the cut leaf cover. This may require one or more passes over the leaves.
- For light leaf coverage, position all wheels at the same height-of-cut setting.
- If there are more than five inches of leaves on lawn, set the front wheels one or two notches higher than the rear wheels. This makes it easier to feed leaves under mower deck.
- Walk at a slower mowing speed if leaves are not being cut up finely enough to be hidden down in the grass.
- If you cut up a lot of oak leaves, you might want to add lime to your grass in the spring. Lime reduces the acidity of oak leaves.

Maintenance

⚠ CAUTION

POTENTIAL HAZARD
- **If you leave the wire on the spark plug, someone could start the engine.**

WHAT CAN HAPPEN
- **Accidental starting of engine could seriously injure you or other bystanders.**

HOW TO AVOID THE HAZARD
- **Pull wire off spark plug before you do any maintenance. Also push wire aside so it does not accidentally contact spark plug.**

Servicing Air Cleaner

Normally, clean air cleaner pre–cleaner after every 25 operating hours or every season. Clean the paper cartridge after every 100 hours or every season. More frequent cleaning is required when mower is operated in dusty or dirty conditions. Replace air cleaner parts, if very dirty.

IMPORTANT: Do not operate engine without air filter elements; extreme engine wear or damage will occur.

Note: Tipping mower on wrong side to service underside of mower may cause damage to air filters.

1. Stop engine and pull wire off spark plug (Fig. 10).
2. Remove two (2) knobs securing air cleaner cover to engine (Fig. 16).
3. Lift cover off. Clean cover thoroughly.
4. Carefully remove pre–cleaner. If pre–cleaner is dirty, carefully wash it in a solution of liquid soap and warm water. Rinse in clear water. Allow to dry thoroughly before using.
5. If paper cartridge is dirty, clean the paper filter by tapping it **gently** on a flat surface. If very dirty, replace cartridge.

   IMPORTANT: Do not oil pre–cleaner or paper cartridge. Do not use pressurized air to clean paper cartridge.
6. Reinstall pre–cleaner over paper cartridge. Reinstall air cleaner cover and tighten securely in place with two (2) knobs.

Replacing Spark Plug

Remove plug after every 25 operating hours and check its condition. Replace spark plug every 100 operating hours or every season. Use a Champion RC12YC spark plug or equivalent.

1. Stop engine and wait for all moving parts to stop. Pull wire off spark plug (Fig. 10).
2. Clean around spark plug and remove plug from cylinder head.

IMPORTANT: Replace a cracked, fouled, or dirty spark plug. Do not sand blast, scrape, or clean electrodes because engine damage could result from grit entering cylinder.

3. Set air gap at 0.020” (0.50 mm) (Fig. 17). Install correctly gapped spark plug and gasket seal. Tighten plug firmly to 14 ft–lb (19 N·m).

Draining Gasoline

1. Stop engine and wait for engine to cool. Pull wire off spark plug.

   Note: Drain gasoline from a cold engine only.

2. Remove cap from fuel tank. Use a pump-type syphon to drain fuel into clean gas can.

   Note: This is the only procedure recommended for draining fuel.

Changing Crankcase Oil and Filter

Change oil after the first 5 operating hours and then after every 50 hours or every season. Change oil while engine is warm. Replace the oil filter (Fig. 18) after every 100 operating hours or yearly, whichever occurs first.

Note: Change oil every 25 hours when operating under heavy load or in high temperatures.

1. Stop engine and wait for all moving parts to stop. Pull wire off spark plug.

2. Remove grass bag. Drain gasoline from fuel tank: refer to DRAINING GASOLINE section.

3. Remove dipstick from oil fill tube and place a drain pan next to left side of mower.

4. Tip mower on its left side, allowing oil to drain into drain pan (Fig. 18).

5. When oil is drained, return mower to upright position and add fresh oil to engine. Refer to OIL section in BEFORE STARTING chapter.

Adjusting Throttle

Throttle control adjustment may be required if engine does not start. Whenever a new throttle control cable is installed, throttle must be adjusted.

1. Stop engine and wait for all moving parts to stop. Pull wire off spark plug.

2. Loosen cable clamp screw until throttle cable slides (Fig. 19).

3. Move governor control lever, throttle cable and casing in the direction of the arrow as far as possible (Fig. 19). Move throttle control to (FAST position). Tighten cable clamp screw to lock adjustment in place.

Cleaning Cooling System

After every 100 operating hours or every season, clean dirt and chaff from cylinder, cylinder head fins and from around carburetor and linkage. Also remove debris from air intake slots on recoil housing. This will ensure proper cooling and best engine performance.

Adjusting Wheel Drive

(self-propelled model only)

If mower does not self-propel or self-propels when control bar is **more** than 1-1/2 inches from the handle, adjust wheel drive control knob on rear of gear box.

1. Close door in mower housing and remove grass bag.

2. ADJUSTMENT (Fig. 20)—Rotate control knob clockwise 1/2 turn if mower does not self-propel. If mower creeps forward, rotate knob 1/2 turn counterclockwise to loosen belt.

3. CHECK ADJUSTMENT—Slowly pull mower backward while control bar is gradually moved toward handle. Adjustment is correct when rear wheels stop turning and control bar is about one inch from handle (Fig. 21).

Inspecting, Removing, Sharpening Blade

Always mow with a sharp blade. A sharp blade cuts cleanly and without tearing or shredding the grass blades like a dull blade.

1. Stop engine and wait for all moving parts to stop. Pull wire off spark plug.

2. Drain gasoline from fuel tank; refer to DRAINING GASOLINE section.

3. Tip mower on its right side (Fig. 22). Avoid rotating blade as starting problems may result.

⚠ CAUTION

POTENTIAL HAZARD
- **Engine could be started accidentally.**

WHAT CAN HAPPEN
- **Accidental starting of engine could cause serious injury to operator or bystanders.**

HOW TO AVOID THE HAZARD
- **Do not attempt to inspect, remove or replace blade without first removing the spark plug wire from spark plug and fastening it away from accidental contact with spark plug.**

4. INSPECTING BLADE—Carefully examine blade for sharpness and wear, especially where flat and curved parts meet (Fig. 23A). Since sand and abrasive material can wear away the metal that connects the flat and curved parts of the blade, check blade before using the mower. If a slot or wear is noticed, (Fig. 23B & C), replace blade. Refer to step 5.

Note: For best performance, install new blade before cutting season begins. During the year, file down small nicks to maintain the cutting edge.

⚠ DANGER

POTENTIAL HAZARD
- **A worn or damaged blade could break and a piece of blade could be thrown into operator's or bystander's area.**

WHAT CAN HAPPEN
- **A thrown piece of blade could cause serious personal injury or death to operator or bystanders.**

HOW TO AVOID THE HAZARD
- **Inspect blade periodically for wear or damage.**
- **Replace a worn or damaged blade.**

5. REMOVING BLADE—Grasp end of blade using a rag or thickly padded glove. Remove blade bolt, lock washer, blade accelerator, and blade (Fig. 22).

6. SHARPENING BLADE—Using a file, sharpen top side of blade and maintain original cutting angle (Fig. 24). The blade will remain balanced if same amount of material is removed from both cutting edges.

   IMPORTANT: Check balance of blade by putting it on a blade balancer. An inexpensive balancer can be purchased at a hardware store. A balanced blade stays in a horizontal position and an unbalanced blade settles to the heavy side. If blade is not balanced, file more metal off cutting edge on heavy end of blade.

7. Reinstall sharp, balanced blade, blade accelerator, lock washer, and blade bolt. Sail part of blade must point toward top of mower housing to assure correct installation. Tighten blade bolt to 50 ft–lbs (68 N·m).

⚠ WARNING

POTENTIAL HAZARD
- **Operating mower without accelerator in place could cause blade to flex, bend or break.**

WHAT CAN HAPPEN
- **A broken blade could cause serious injury or death to operator or bystanders.**

HOW TO AVOID THE HAZARD
- **Do not operate mower without accelerator.**

Lubrication

After every 25 operating hours or when season ends, pivot arms must be lubricated.

1. Move rear wheel height–of–cut levers to center setting. Wipe grease fittings with clean rag (Fig. 25). Install grease gun onto fitting and gently apply 2 or 3 pumps of #2 Multi–Purpose Lithium Base Grease. Excessive grease pressure may damage seals.

Lubricating Gear Case

(self-propelled model only)

After every 100 operating hours, grease the gear case with #2 Multi-Purpose Lithium Base Grease.

1. Remove bag.
2. Install grease gun onto fitting through belt cover opening (Fig. 26). Gently apply 1–2 pumps of grease.
3. Reinstall bag.

Adjusting Blade Brake Cable

Whenever a new blade brake cable assembly is installed, an adjustment is required.

1. Stop engine and wait for all moving parts to stop. Pull wire off spark plug.
2. CHECK ADJUSTMENT (Fig. 27 & 28)—Move control bar toward handle until slack in wire is removed. Gap between brake lever and handle must be $3/16$"-$1/4$". See Step 3 for adjustment.
3. ADJUST CABLE CONDUIT—

   Self-propelled Model (Fig. 27)

   Loosen nut on cable bracket. Insert $3/16$"-$1/4$" object between brake lever and handle. Pull down on cable conduit until all slack is removed from wire. Then tighten nut.

   Hand Push Model (Fig. 28)

   Loosen jam nut on brake cable. Insert $3/16$"-$1/4$" object between brake lever and handle. Turn cable adjuster on brake cable until slack is removed. Then tighten nut.

Servicing Wheels

Removal (Fig. 29)

1. Stop engine and wait for all moving parts to stop. Pull wire off spark plug.
2. Remove capscrew, wheel spacer, and locknut mounting wheel to pivot arm.
3. Separate wheel halves from tire by removing four capscrews and locknuts.

   Note: If bearings are to be removed from bearing/hub assembly, remove by pressing on bearing spacer.

Assembly (Fig. 29)

1. Position tire onto one wheel half by aligning lugs on each.
2. Place bearing/hub assembly into center hole of wheel half. Make sure legs of hub are positioned over flange of hole.

3. Place other wheel half onto bearing/hub assembly, aligning wheel and tire lugs and mounting holes.

4. Using two 1/4-20 x 1.50″ lg. fully threaded screws or bolts and non-locking nuts, loosely secure wheel halves together. Mount screws or bolts in opposing holes.

5. Check alignment of all parts and tighten screws, alternating from side to side for a uniform fit, until wheel halves are drawn together.

6. Install two capscrews and locknuts, previously removed, in remaining holes in wheel halves and tighten. Remove two long screws or bolts and replace with two capscrews and locknuts.

7. Reinstall wheel to pivot arm with capscrews, spacer, and locknut. Make sure spacer is positioned between wheel hub and pivot arm.

Cleaning Mower

Plug

To ensure best performance, the discharge tunnel plug must be cleaned after each use. When grass is thick and lush, clippings may collect on and around the plug; this may make plug removal difficult. After each use, remove plug from discharge tunnel and clean off all debris.

Discharge Tunnel

Always be sure that discharge tunnel door closes securely when handle is released. If debris prevents discharge door from closing securely, clean inside of discharge tunnel and door thoroughly.

⚠ WARNING

POTENTIAL HAZARD

- **Grass clippings and other objects can be thrown from an open discharge tunnel.**

WHAT CAN HAPPEN

- **Thrown objects can cause serious injury or kill operator or bystanders.**

HOW TO AVOID THE HAZARD

- **Never start or operate the mower unless <u>one</u> of the following is true:**
  1. **The discharge tunnel plug is locked securely in discharge tunnel.**
  2. **The grass bag is locked in place.**
  3. **The optional side discharge chute is locked in place.**
  4. **The discharge tunnel door is closed.**

Underside of Mower Housing

Keep underside of mower housing clean. Be especially careful to keep kickers free of debris (Fig. NO TAG).

Washing Method

Whenever the underside of the mower requires cleaning, follow this procedure for washing debris out from under deck.

1. Position mower on a flat surface near a garden hose.

2. Start the engine.

3. Hold the running garden hose at handle level and direct water to flow on ground just in front of right rear tire (Fig. 30). The rotating blade will draw water under the deck and wash out clippings. Let the water run for a few minutes or until you no longer see clippings being washed out from under deck.

4. Stop the engine.

5. Turn off the garden hose.

6. Restart mower and let it run for a few minutes to dry out moisture on the mower and its components.

Scraping Method

If washing does not remove all debris from under deck, tip mower and scrape it clean.

1. Pull wire off spark plug.

2. Drain gasoline from fuel tank: refer to DRAINING GASOLINE section.

3. Tip mower on its right side.

4. Remove dirt and grass clippings with a hardwood scraper. Avoid burrs and sharp edges.

5. Turn mower upright.

6. Refill gas tank.

7. Reconnect spark plug wire.

Belt Cover (self-propelled model only)

Keep area under belt cover free of debris.

1. Remove bolts securing belt cover (Fig. 26) to mower housing. Lift off cover and brush out all debris from belt area. Reinstall belt cover.

Fuel Filter

Replacing the Fuel Filter

Replace the fuel filter after every 100 operating hours or yearly, whichever occurs first. The best time to replace the fuel filter (Fig. 31) is when the fuel tank is empty. Never install a dirty filter if it is removed from the fuel line.

1. Squeeze the ends of the hose clamps together and slide them away from the filter (Fig. 31).

2. Remove the filter from the fuel lines.

3. Install a new filter and move the hose clamps close to the filter.

Storage

1. For long term storage, either drain gasoline from fuel tank or add a fuel stabilizer to the gasoline. To drain gasoline, refer to DRAINING GASOLINE section. After fuel is drained, start engine and let it idle until all fuel is consumed and engine stops. Repeat the starting procedure two more times to ensure all gas is removed from the engine. If gasoline is not drained, gum-like varnish deposits will form and cause poor engine operation, even starting problems.

   Note: If engine is operating on oxygenated or reformulated gasoline (gasoline blended with an alcohol or an ether), remove all fuel from tank and run engine until it stops from lack of fuel before storing.

   Fuel can be left in gas tank only if a fuel additive, such as Toro's Stabilizer/Conditioner, is added to gasoline and run through engine before storing. Toro's Stabilizer/Conditioner is a petroleum distillate based conditioner/stabilizer. Toro does not recommend stabilizers with an alcohol base, such as ethanol, methanol or isopropyl. Use fuel additive in recommended quantities as specified on container.

   Under normal conditions, fuel additives remain effective in fuel for 6–8 months.

2. Drain oil: refer to CHANGING CRANKCASE OIL section. After oil is drained, do not fill crankcase with oil until the following steps (3–10) are completed.

3. Remove spark plug and pour 2 tablespoons of SAE 30 oil into hole in cylinder. Pull starter rope slowly to coat inside of cylinder. Install spark plug and tighten to 14 ft–lb (19 N·m). **DO NOT REINSTALL WIRE ON SPARK PLUG.**

4. Clean mower housing: refer to CLEANING MOWER section.

5. Clean dirt and chaff from cylinder, cylinder head fins, and blower housing. Also remove grass clippings, dirt, and grime from external parts of the engine, shrouding, and top of mower housing.

6. Check condition of blade: refer to INSPECTING, REMOVING, SHARPENING BLADE section.

7. Tighten all nuts, bolts, and screws.

8. Clean air cleaner: refer to SERVICING AIR CLEANER section.

9. Lubricate the pivot arms: refer to LUBRICATION section.

10. Touch up all rusted or chipped paint surfaces. Toro Re–Kote paint is available from an Authorized TORO Service Dealer.

11. Fill crankcase with oil: refer to FILL CRANKCASE WITH OIL section.

12. Store mower in a clean, dry place, out of the reach of children. Cover mower to keep it clean and protected.

Accessories

For special conditions, the following accessories may be purchased at your local Authorized Toro Service Dealer.

1. **Side Discharge Kit, Model No. 59199**—Install in seconds. Rear mounted in place of the grass bag. Disperses clippings while trimming on both sides (Fig. 32).

2. **Spark Arrestor and Screw (Part No. 94–1681)**—If a spark arrestor is required because of local, state, or federal regulations, it may be purchased at your local Authorized TORO Service Dealer. Clean screen after every 75 hours of operation. If mower is operated on any California forest, brush, or grass covered land without a properly operating spark arrestor, the operator is violating state law, Section 4442 Public Resources Code.

Federal and California Emission Control Warranty Statement

A Two Year Limited Warranty

Your Warranty Rights and Obligations

The U.S. Environmental Protection Agency (EPA), the California Air Resources Board (CARB) and Toro are pleased to explain the emission control system warranty on your 1995 and later utility/lawn/garden equipment engine. In California, new utility/lawn/garden equipment engines must be designed, built and equipped to meet the State's stringent anti–smog standards. In other states, new 1997 and later model year utility/lawn/garden equipment engines must be designed, built and equipped, at the time of sale, to meet the U.S. EPA regulations for small nonroad engines. The equipment engine must be free from defects in materials and workmanship which cause it to fail to conform with U.S. EPA standards for the first two years of engine use from the date of sale to the ultimate purchaser. Toro must warrant the emission control system on your utility/lawn/garden equipment engine for the period of time listed above provided there has been no abuse, neglect or improper maintenance of your utility/lawn/garden equipment engine.

Your emission control system may include parts such as the carburetor or fuel injection system, the ignition system, and catalytic converter. Also included may be hoses, belts, and connectors and other emission related assemblies.

Where a warrantable condition exists, Toro will repair your engine at no cost to you including diagnosis, parts and labor.

Manufacturer's Warranty Coverage:

Utility/Lawn/Garden equipment engines are warranted for two years from the date of delivery. If any emission–related part on your engine is defective in materials or workmanship, the part will be repaired or replaced by Toro free of charge.

Owner's Warranty Responsibilities:

- As the engine owner, you are responsible for the performance of the required maintenance listed in your owner's manual. Toro recommends that you retain all receipts covering maintenance on your equipment, but Toro cannot deny warranty solely for the lack of receipts or for your failure to ensure the performance of all scheduled maintenance.
- Any replacement part or service that is equivalent in performance and durability may be used in non–warranty maintenance or repairs, and shall not reduce the warranty obligations of the engine manufacturer.
- As the engine owner, you should, however, be aware that Toro may deny you warranty coverage if your engine or a part has failed due to abuse, neglect, improper maintenance or unapproved modifications or parts.
- You are responsible for presenting your equipment engine to a TORO Service Dealer as soon as a problem exists. The warranty repairs should be completed in a reasonable amount of time, not to exceed 30 days.
- If you have any questions regarding your warranty rights and responsibilities or if you need a referral to a TORO Service Dealer, please feel free to contact us at the following address:

  Toro Customer Service Department
  8111 Lyndale Avenue South
  Bloomington, MN 55420–1196
  612–888–8801
  800–348–2424

Warranted Parts:

The warranty period begins on the date the engine or equipment is delivered to a retail purchaser. The manufacturer warrants to the initial owner and each subsequent purchaser that the engine is free from defects in materials and workmanship which cause the engine to fail to conform with applicable regulations for a period of two years.

Failures caused by abuse, neglect, or improper maintenance are not covered. The use of add–on or modified parts can be grounds for disallowing a warranty claim. The manufacturer is not liable to cover failures of warranted parts caused by the use of add–on or modified parts. Toro is liable for damages to other engine components caused by the failure of a warranted part still under warranty. The owner is responsible for the performance of the required maintenance, as defined by the manufacturer in the written instructions.
Any warranted part which is not scheduled for replacement as required maintenance, or which is scheduled only for regular inspection to the effect of ”repair or replace as necessary” shall be warranted for the warranty period. Any warranted part which is scheduled for replacement as required maintenance shall be warranted for the period of time up to the first scheduled replacement point for that part. Coverage under this warranty extends only to the parts listed below (the emissions system parts) to the extent that these parts were present on the engine when purchased.

– Fuel Metering System
  - Cold start enrichment system including the choke mechanism or priming system
  - Fuel pump
  - Air fuel ratio feed back system
  - Carburetor and internal parts
  - Fuel injection system

– Air Induction System
  - Air cleaner
  - Reed intake system
  - Intake manifold
  - Controlled hot air intake system

– Ignition System
  - Spark plug(s)
  - Ignition coils and electronics
  - Advance/retard mechanisms

– Catalytic Converter/Thermal Reactor System
  - Catalytic converter
  - Thermal reactor
  - Exhaust manifold

– Air Injection System
  - Air injection system or pulse valve
  - Valves affecting distribution of air

– Exhaust Gas Recirculation (EGR) System
  - EGR valve body and piping system connecting to the intake side of the engine
  - EGR control system

– Particulate Controls
  - Traps filters, precipators and any other device used to capture particulate emissions

– Miscellaneous Items Used in the Above Systems
  - Vacuum, temperature, and time sensitive valves and switches
  - Electronic controls
  - Hoses, connectors, and assemblies of same

How to Get Warranty Service:

Should you feel your TORO Product requires warranty service, contact the dealer who sold you the product or any Authorized TORO Service Dealer or TORO Master Service Dealer. The Yellow Pages of your telephone directory is a good reference source. The dealer will either arrange service at his/her dealership or recommend another Authorized Service Dealer who may be more convenient. You may need proof of purchase (copy of registration card, sales receipt, etc.) for

warranty validation. The owner shall not be charged for diagnostic labor which leads to the determination that a warranted part is defective, if the diagnostic work is performed at a warranty station.

The Toro Company is not liable for indirect, incidental or consequential damages in connection with the use of the TORO Products covered by this warranty, except for damages to other engine components caused by the failure of a warranted part still under warranty. Some states do not allow exclusions of incidental or consequential damages, so the above exclusion may not apply to you.

This warranty gives you specific legal rights, and you may also have other rights which vary from state to state.

Walk Mowers

THE TORO PERFORMANCE WARRANTY

A Full Warranty
(Limited Warranty for Commercial Use)

What Is Covered By This Express Warranty?

The Toro Company promises to repair any TORO Product used for normal residential purposes* if defective in materials or workmanship or if it stops functioning due to the failure of a component. The following time periods apply from the date of purchase:

- Super Recycler® Walk Mowers . 5 year full warranty
- VacuPower™ Walk Mowers . . . . 5 year full warranty
- All Others . . . . . 2 year full warranty

The cost of parts and labor is included, but the customer pays the transportation costs.

What Products Are Covered By This Warranty?

This warranty applies to all gasoline powered consumer walk power mowers. Riding products and wide area walk behind mowers are covered by separate warranty statements.

How About Commercial Use?

TORO Consumer Products used for commercial, institutional or rental use are warranted against defects in material or workmanship. Components failing due to normal wear are not covered by this warranty. The following time periods apply from the date of purchase:

Products	Warranty Period	
	Engine	Entire Unit
• 21" Commercial Duty Walk Mowers		
With GTS 200 Engine	2 year limited	1 year limited
Without GTS 200 Engine .	1 year limited	1 year limited
• All Others	45 day limited	45 day limited

How Do You Get Warranty Service?

Should you feel your TORO Product requires warranty service, contact the dealer who sold you the product or any Authorized TORO Service Dealer or TORO Master Service Dealer. The Yellow Pages of your telephone directory is a good reference source. The dealer will either arrange service at his/her dealership or recommend another Authorized Service Dealer who may be more convenient. You may need proof of purchase (copy of registration card, sales receipt, etc.) for warranty validation.

If for any reason you are dissatisfied with the Service Dealer's analysis of the defect in materials or workmanship or if you need a referral to a TORO Service Dealer, please feel free to contact us at the following address:

Toro Customer Service Department
8111 Lyndale Avenue South
Bloomington, MN 55420−1196
612−888−8801
800−348−2424

What Must You Do To Keep The Warranty In Effect?

You must maintain your TORO Product by following the maintenance procedures described in the operator's manual. Such routine maintenance, whether performed by a dealer or by you, is at your expense.

What Does This Warranty Not Cover? and How Does Your State Law Relate To This Warranty?

There is no other express warranty except for special emission system coverage on some products and the TORO Starting Guarantee on GTS Engines. This express warranty does not cover:

- Cost of regular maintenance service or parts, such as filters, fuel, lubricants, oil changes, spark plugs, blade sharpening, blade worn out, cable/linkage adjustments or brake and clutch adjustments.

- Any product or part which has been altered or misused or required replacement or repair due to accidents or lack of proper maintenance.

- Repairs necessary due to improper fuel, contaminants in the fuel system, or failure to properly prepare the fuel system prior to any period of non−use over three months.

- Pickup and delivery charges.

All repairs covered by this warranty must be performed by an Authorized TORO Service Dealer using Toro approved replacement parts.

Repair by an Authorized TORO Service Dealer is your sole remedy under this warranty.

The Toro Company is not liable for indirect, incidental or consequential damages in connection with the use of the TORO Products covered by this warranty, including any cost or expense of providing substitute equipment or service during reasonable periods of malfunction or non−use pending completion of repairs under this warranty. Some states do not allow exclusions of incidental or consequential damages, so the above exclusion may not apply to you.

This warranty gives you specific legal rights, and you may also have other rights which vary from state to state.

* Normal residential purposes means mowing the lawn on the same lot as your home. Use at more than one location is considered commercial use and the commercial use warranty would apply.

COUNTRIES OTHER THAN THE UNITED STATES OR CANADA

Customers who have purchased TORO products exported from the United States or Canada should contact their TORO Distributor (Dealer) to obtain guarantee policies for your country, province, or state. If for any reason you are dissatisfied with your Distributor's service or have difficulty obtaining guarantee information, contact the TORO importer. If all other remedies fail, you may contact us at The Toro Company.

Rev. 11/21/97