Form No. 3400-893 Rev A

55cm Recycler® Lawn Mower

Model No. 20960—Serial No. 316000001 and Up

Operator's Manual

Introduction

This rotary-blade, walk-behind lawn mower is intended to be used by residential homeowners. It is designed primarily for cutting grass on well-maintained lawns on residential properties. It is not designed for cutting brush or for agricultural uses.

Read this information carefully to learn how to operate and maintain your product properly and to avoid injury and product damage. You are responsible for operating the product properly and safely.

You may contact Toro directly at www.Toro.com for product and accessory information, help finding a dealer, or to register your product.

Whenever you need service, genuine Toro parts, or additional information, contact an Authorized Service Dealer or Toro Customer Service and have the model and serial numbers of your product ready. Figure 1 identifies the location of the model and serial numbers on the product.

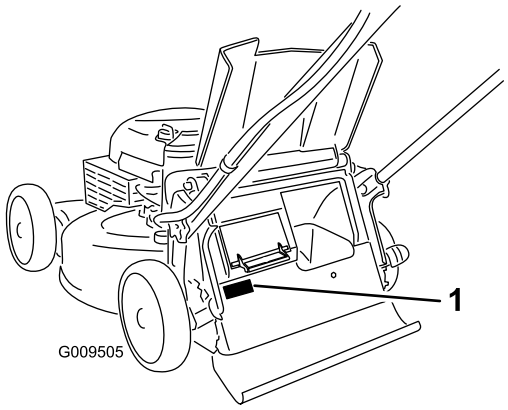

Figure 1

1. Model and serial number plate

Write the product model and serial numbers in the space below:

Model No. _____

Serial No. _____

This manual identifies potential hazards and has safety messages identified by the safety alert symbol (Figure 2), which signals a hazard that may cause serious injury or death if you do not follow the recommended precautions.



Figure 2

1. Safety alert symbol

This manual uses 2 words to highlight information. **Important** calls attention to special mechanical information and **Note** emphasizes general information worthy of special attention.

This product complies with all relevant European directives. For details, see the separate product-specific Declaration of Conformity (DOC) sheet.

For models with stated engine horsepower, the gross horsepower of the engine was laboratory rated by the engine manufacturer in accordance with SAE J1940. As configured to meet safety, emission, and operating requirements, the actual engine horsepower on this class of lawn mower will be significantly lower.

Do not tamper with the engine controls or alter the governor speed; doing so may create an unsafe condition resulting in personal injury.

Contents

Introduction 1
Safety 2
General Safety 2
Sound Pressure 2
Sound Power 2
Hand/Arm Vibration 2
Safety and Instructional Decals 3
Setup 4
1 Assembling and Unfolding the Handle 4
2 Installing the Recoil-Starter Rope in the Rope Guide 4
3 Filling the Engine with Oil 5
4 Assembling the Grass Bag 6
Product Overview 7
Specifications 7
Operation 7
Before Operation 7
Before Operation Safety 7
Filling the Fuel Tank 8
Checking the Engine-Oil Level 8
Adjusting the Handle Height 9
Adjusting the Cutting Height 9

© 2015—The Toro® Company
8111 Lyndale Avenue South
Bloomington, MN 55420

Register at www.Toro.com.

CE

Original Instructions (EN)
Printed in the USA
All Rights Reserved
3400-893 A

During Operation 9
During Operating Safety..... 9
Starting the Engine 10
Using the Self-Propel Drive 10
Using the Traction-Assist Handle 11
Stopping the Engine 11
Recycling the Clippings 11
Bagging the Clippings 11
Side-Discharging the Clippings.....12
Operating Tips 13
After Operation 14
After Operating Safety 14
Cleaning under the Machine.....14
Folding the Handle 14
Maintenance 16
Recommended Maintenance Schedule(s) 16
Preparing for Maintenance.....16
Replacing the Air Filter.....17
Changing the Engine Oil 17
Replacing the Blade 18
Adjusting the Self-Propel Drive 19
Storage 19
Preparing the Machine for Storage 19
Removing the Machine from Storage.....20

Safety

This machine has been designed in accordance with EN ISO 5395:2013.

General Safety

This product is capable of amputating hands and feet and of throwing objects. Always follow all safety instructions to avoid serious personal injury.

Using this product for purposes other than its intended use could prove dangerous to you and bystanders.

- Read and understand the contents of this *Operator's Manual* before you start the engine. Ensure that everyone using this product knows how to use it and understands the warnings.
- Do not put your hands or feet near moving components of the machine.
- Do not operate the machine without all guards and other safety protective devices in place and working on the machine.
- Keep clear of any discharge opening. Keep bystanders a safe distance from the machine.
- Keep children out of the operating area. Never allow children to operate the machine.
- Stop the machine and shut off the engine before servicing, fueling, or unclogging the machine.

Improperly using or maintaining this machine can result in injury. To reduce the potential for injury, comply with these safety instructions and always pay attention to the safety-alert symbol, which means Caution, Warning, or Danger—personal safety instruction. Failure to comply with these instructions may result in personal injury or death.

You can find additional items of safety information in their respective sections throughout this manual.

Sound Pressure

This unit has a sound pressure level at the operator's ear of 88 dBA, which includes an Uncertainty Value (K) of 1 dBA.

The sound pressure level was determined according to the procedures outlined in EN ISO 5395:2013.

Sound Power

This unit has a guaranteed sound power level of 98 dBA, which includes an Uncertainty Value (K) of 1 dBA.

The sound power level was determined according to the procedures outlined in ISO 11094.

⚠ CAUTION

Long-term exposure to noise while operating the machine may cause some hearing loss.

Wear adequate hearing protection whenever you operate the machine for an extended period of time.

Hand/Arm Vibration

Measured vibration level for right hand = 2.7 m/s^2

Measured vibration level for left hand = 3.1 m/s^2

Uncertainty Value (K) = 1.5 m/s^2

Measured values were determined according to the procedures outlined in EN ISO 5395:2013.

⚠ CAUTION

Long-term exposure to vibration while operating the machine may cause some numbness in the hands and wrists.

Wear gloves that dampen the vibration whenever you operate the machine for an extended period of time.

Safety and Instructional Decals

Important: **Safety and instruction decals are located near areas of potential danger. Replace damaged decals.**

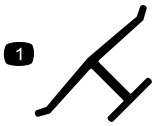

Manufacturer's Mark

1. Indicates the blade is identified as a part from the original machine manufacturer.

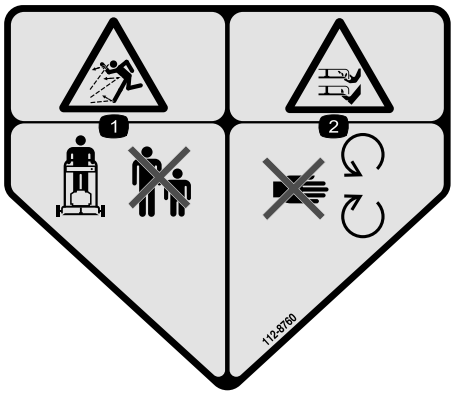

112-8760

1. Thrown object hazard—keep bystanders a safe distance from the machine.
2. Cutting/dismemberment of hand or foot—stay away from moving parts.



112-8867

1. Lock
2. Unlock

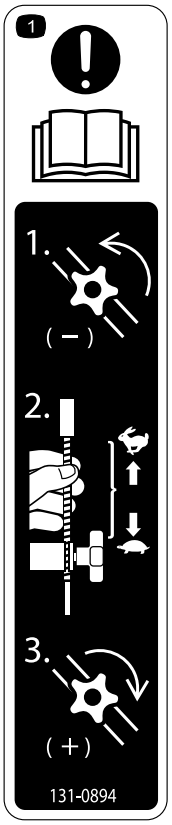

131-0894

Traction Adjustment

1. Attention; read the *Operator's Manual*—1) Loosen the knob by turning it counter clockwise; 2) Pull the cable(s) away from the engine to decrease the traction, or push the cable(s) toward the engine to increase the traction; 3) Tighten the knob by turning it clockwise.

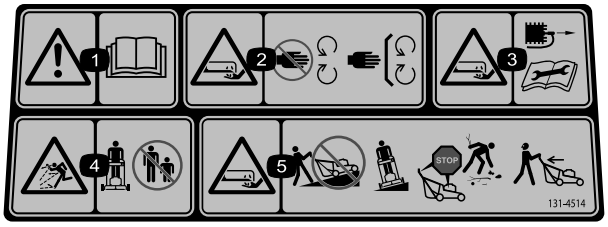

131–4514

1. Warning—read the *Operator's Manual*.
2. Cutting/dismemberment hazard of hand or foot, mower blade—stay away from moving parts; keep all guards and shields in place.
3. Cutting/dismemberment hazard of hand or foot, mower blade—disconnect the spark-plug wire and read the instructions before servicing or performing maintenance.
4. Thrown object hazard—keep bystanders a safe distance from the machine.
5. Cutting/dismemberment hazard of hand or foot, mower blade—do not operate up and down slopes; operate side to side on slopes; stop the engine before leaving the operating position; and look behind you when backing up.

Setup

Important: Remove and discard the protective plastic sheet that covers the engine.

1

Assembling and Unfolding the Handle

No Parts Required

Procedure

1. Remove and save the 2 handle knobs and 2 carriage bolts from the handle brackets (Figure 3).

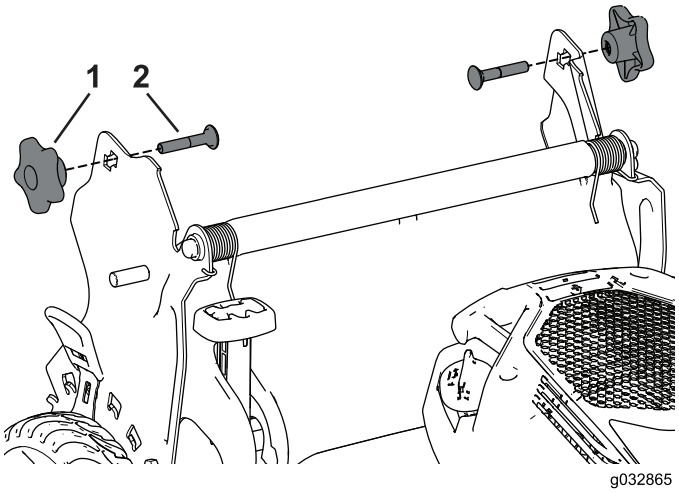

Figure 3

1. Handle knob
2. Carriage bolt

2. Install the handle ends onto the mower housing so that the pin attached to each handle bracket is in the lower hole of its related handle end (Figure 4).

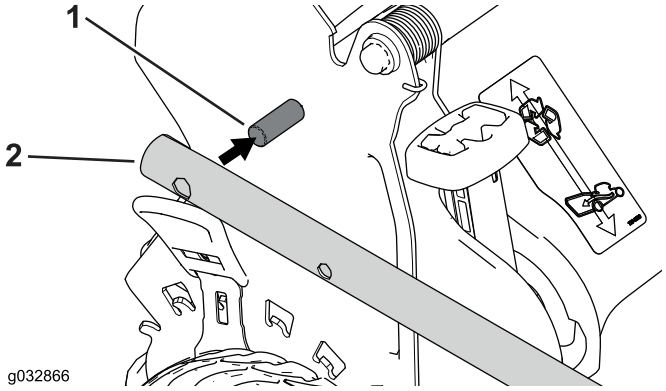

Figure 4

1. Pin
2. Handle end

Note: The pins will not show through the holes in the handle ends when the handle is in the folded position.

3. Unfold the handle to the operating position by rotating it rearward (Figure 5).

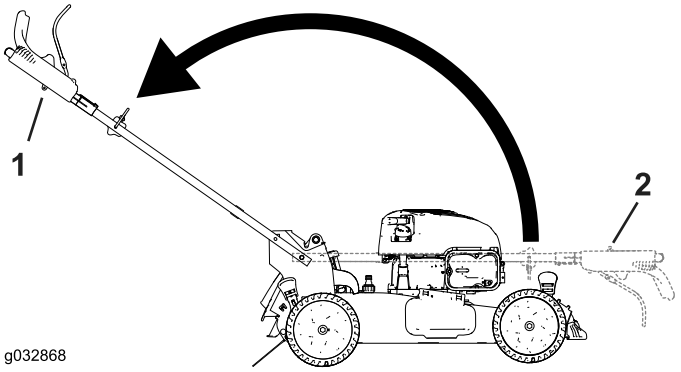

Figure 5

1. Folded position
2. Operating position

4. Insert the carriage bolt (with the bolt head toward the inside) through the upper or lower square hole in handle bracket and the upper hole in the handle end (Figure 6).

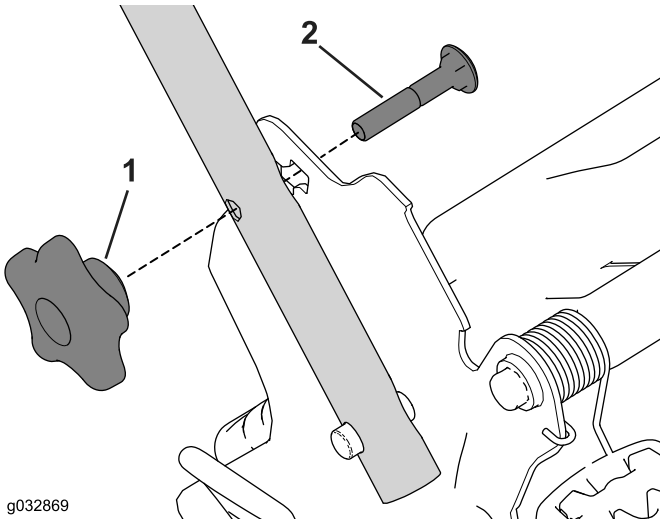

Figure 6

1. Handle knob
2. Carriage bolt

5. Loosely install the handle knobs onto the carriage bolts.
6. Refer to steps 3 through 5 of Adjusting the Handle Height (page 9).

2

Installing the Recoil-Starter Rope in the Rope Guide

No Parts Required

Procedure

Important: You must install the recoil-starter rope in the rope guide.

Hold the blade-control bar to the upper handle and pull the recoil-starter rope through the rope guide on the handle (Figure 7).

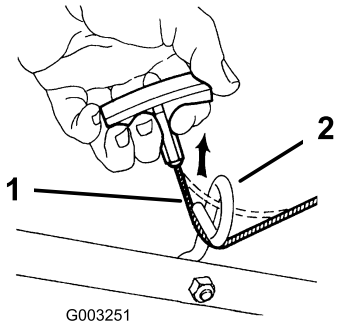

Figure 7

1. Recoil-starter rope
2. Rope guide

3

Filling the Engine with Oil

No Parts Required

Procedure

Important: Your machine does not come with oil in the engine. Before starting the engine, fill the engine crankcase with oil.

1. Move the machine to a level surface.
2. Remove the dipstick (Figure 8) and pour about 3/4 of the crankcase capacity of oil into the oil-fill tube.

   Note: Max. fill: 0.53 L (18 oz), type: SAE 30 detergent oil with an API service classification of SF, SG, SH, SJ, SL, or higher.

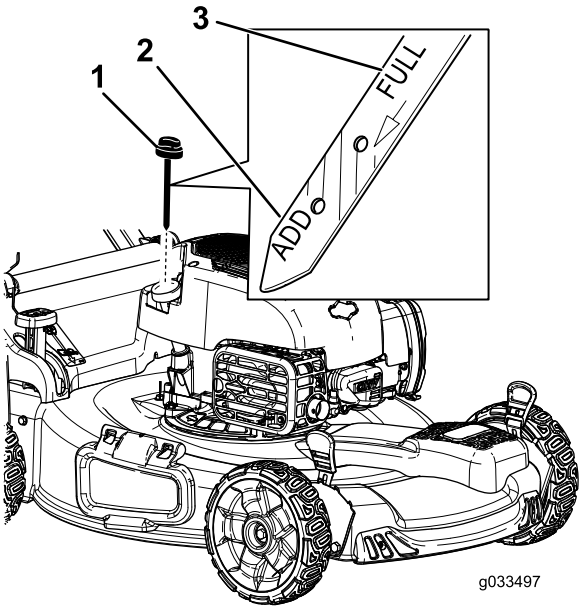

Figure 8

1. Dipstick
2. Add marker
3. Full marker

3. Wipe the dipstick clean with a clean cloth.
4. Insert the dipstick fully into the oil-fill tube.
5. Remove the dipstick and read the oil level on the dipstick; refer to Figure 8.
   - If the oil is below the **Add** mark on the dipstick, slowly pour a small amount of oil into the oil-fill tube, wait 3 minutes, and then repeat steps 3 through 5 until the oil level is at the **Full** mark on the dipstick.
   - If the oil is above the **Full** mark on the dipstick, drain the excess oil until the oil level is at the **Full** mark on the dipstick. To drain the excess oil, refer to Changing the Engine Oil (page 17).

   Important: If the oil level in the crankcase is too low or too high and you run the engine, you may damage the engine.
6. Install the dipstick into the oil-fill tube securely.

   Important: *Change the engine oil after the first 5 operating hours*; change it yearly thereafter. Refer to Changing the Engine Oil (page 17).

4

Assembling the Grass Bag

No Parts Required

Procedure

1. Slip the grass bag over the frame as shown in Figure 9.

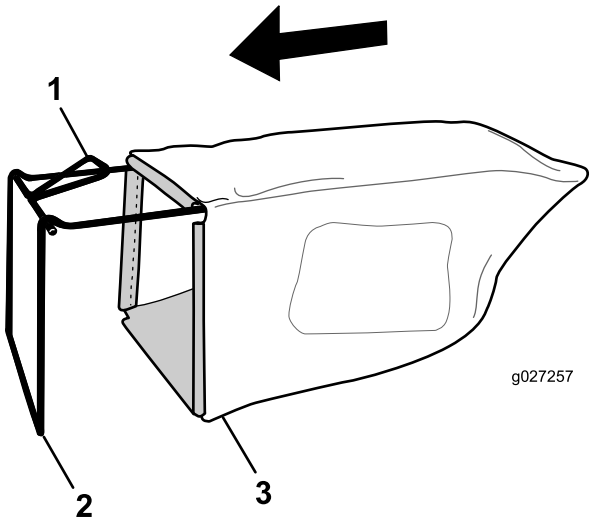

Figure 9

1. Handle
2. Frame
3. Grass bag

Note: Do not slip the bag over the handle (Figure 9).

2. Hook the bottom channel of the bag onto the bottom of the frame (Figure 10).

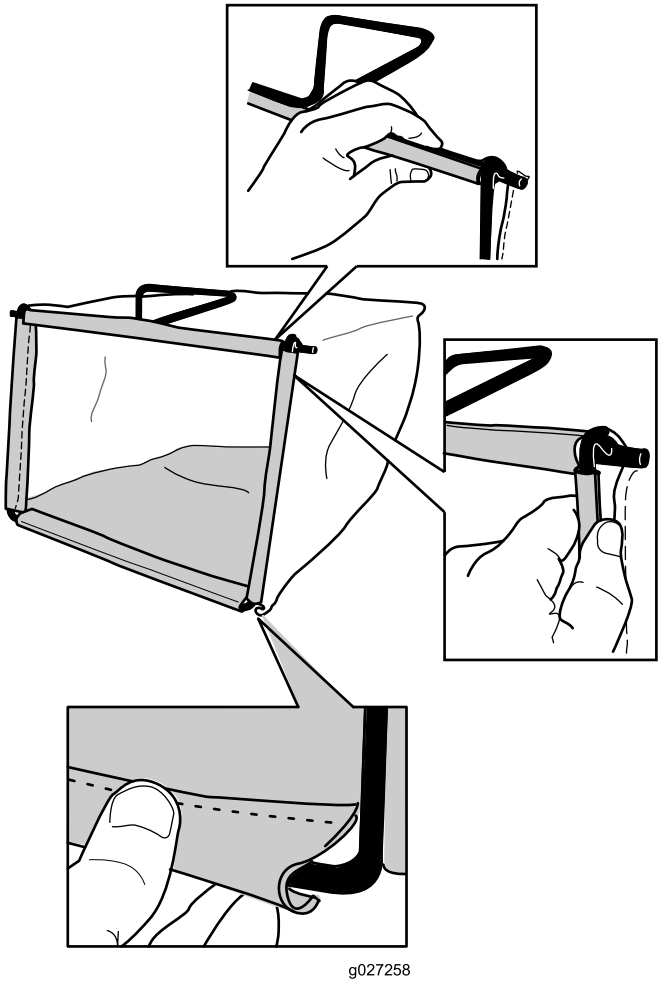

Figure 10

3. Hook the top and side channels of the bag onto the top and sides of the frame, respectively (Figure 10).

Product Overview

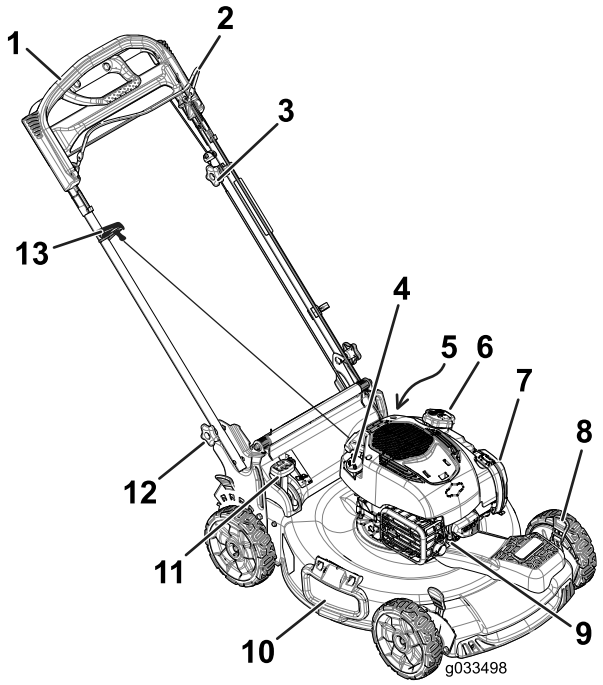

Figure 11

1. Handle
2. Blade-control bar
3. Adjustment knob for the self-propel drive
4. Oil fill/dipstick
5. Washout port (not shown)
6. Fuel-tank cap
7. Air filter
8. Cutting-height lever (4)
9. Spark plug
10. Side-discharge deflector
11. Bag-on-demand lever
12. Handle knob (2)
13. Recoil-start handle

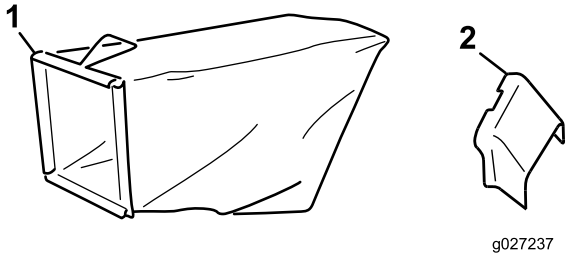

Figure 12

1. Grass bag
2. Side-discharge chute

Specifications

Model	Weight	Length	Width	Height
20960	37 kg (81 lb)	150 cm (59 in)	58 cm (23 in)	107 cm (42 in)

Operation

Before Operation

Before Operation Safety

General Safety

- Become familiar with the safe operation of the equipment, operator controls, and safety signs.
- Check that all guards and safety devices, such as deflectors and/or grass catcher, are in place and working properly.
- Always inspect the machine to ensure that the blades, blade bolts, and cutting assembly are not worn or damaged.
- Inspect the area where you will use the machine and remove all objects that the machine could throw.
- Adjusting the cutting height may bring you into contact with the moving blade, causing serious injury.
  - Shut off the engine and wait for all moving parts to stop.
  - Do not put your fingers under the housing when adjusting the cutting height.

Fuel Safety

⚠ DANGER

Fuel is extremely flammable and highly explosive. A fire or explosion from fuel can burn you and others and can damage property.

- **To prevent a static charge from igniting the fuel, place the container and/or machine directly on the ground before filling, not in a vehicle or on an object.**
- **Fill the fuel tank outdoors, in an open area, when the engine is cold. Wipe up any fuel that spills.**
- **Do not handle fuel when smoking or around an open flame or sparks.**
- **Store fuel in an approved container and keep it out of the reach of children.**

⚠ WARNING

Fuel is harmful or fatal if swallowed. Long-term exposure to vapors can cause serious injury and illness.

- **Avoid prolonged breathing of vapors.**
- **Keep your hands and face away from the nozzle and the fuel-tank opening.**
- **Keep fuel away from your eyes and skin.**

Filling the Fuel Tank

- For best results, use only clean, fresh (less than 30 days old), unleaded gasoline with an octane rating of 87 or higher ((R+M)/2 rating method).
- Oxygenated fuel with up to 10% ethanol or 15% MTBE by volume is acceptable.
- **Ethanol:** Gasoline with up to 10% ethanol (gasohol) or 15% MTBE (methyl tertiary butyl ether) by volume is acceptable. Ethanol and MTBE are not the same. Gasoline with 15% ethanol (E15) by volume is not approved for use. Never use gasoline that contains more than 10% ethanol by volume, such as E15 (contains 15% ethanol), E20 (contains 20% ethanol), or E85 (contains up to 85% ethanol). Using unapproved gasoline may cause performance problems and/or engine damage which may not be covered under warranty.
- **Do not** use gasoline containing methanol.
- **Do not** store fuel either in the fuel tank or in fuel containers over the winter unless a fuel stabilizer is used.
- **Do not** add oil to gasoline.

Fill the fuel tank with fresh unleaded regular gasoline from a major name-brand service station (Figure 13).

Important: To reduce starting problems, add fuel stabilizer to the fuel all season, mixing it with gasoline less than 30 days old.

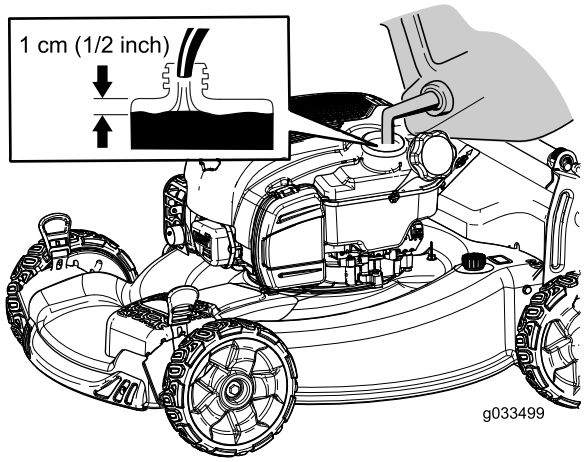

Figure 13

Checking the Engine-Oil Level

Service Interval: Before each use or daily

Note: Max. fill: 0.53 L (18 oz), type: SAE 30 detergent oil with an API service classification of SF, SG, SH, SJ, SL, or higher.

1. Move the machine to a level surface.
2. Remove the dipstick (Figure 14).

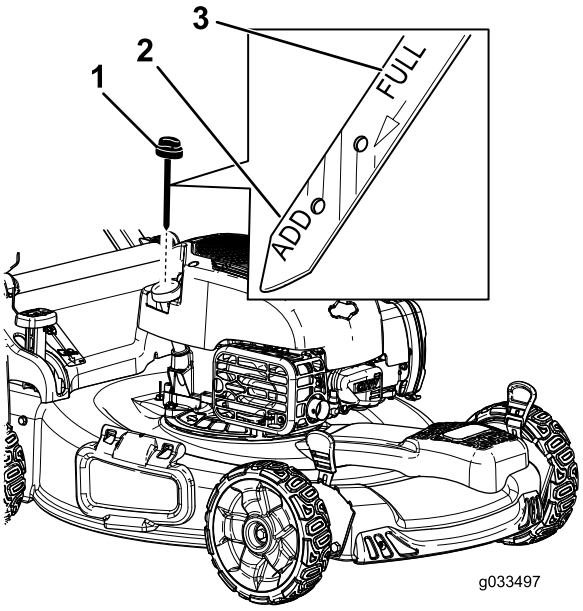

Figure 14

1. Dipstick
2. Add marker
3. Full marker

3. Wipe the dipstick clean with a clean cloth.
4. Insert the dipstick fully into the oil-fill tube.
5. Remove the dipstick and read the oil level on the dipstick; refer to Figure 14.
   - If the oil is below the **Add** mark on the dipstick, slowly pour a small amount of oil into the oil-fill tube, wait 3 minutes, and then repeat steps 3 through 5 until the oil level is at the **Full** mark on the dipstick.
   - If the oil is above the **Full** mark on the dipstick, drain the excess oil until the oil level is at the **Full** mark on the dipstick. To drain the excess oil, refer to Changing the Engine Oil (page 17).

   Important: If the oil level in the crankcase is too low or too high and you run the engine, you may damage the engine.
6. Install the dipstick into the oil-fill tube securely.

Adjusting the Handle Height

You can raise or lower the handle in 1 of 2 positions that is more comfortable for you (Figure 15).

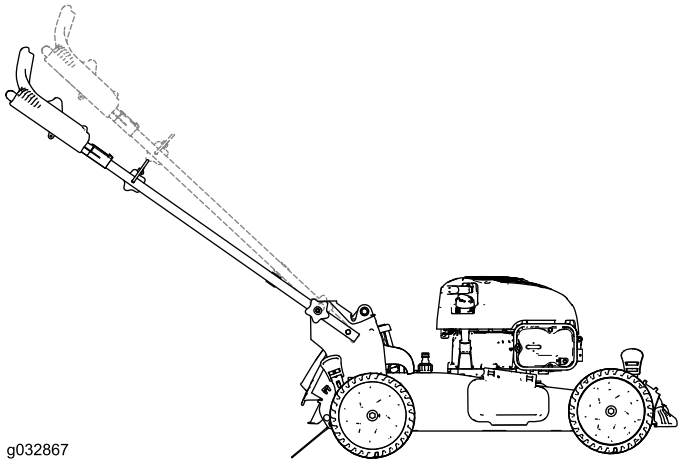

Figure 15

1. Loosen both handle knobs until you can push the square edges of the carriage bolts out of the square holes in the handle brackets.
2. Push the knobs until they are loose.
3. Move the handle to the upper or lower height position.
4. Pull the knobs until the square edges of each carriage bolt fits into its related square hole.
5. Tighten the handle knobs as tight as you can.

Adjusting the Cutting Height

Adjust the cutting height as desired. Set the front wheels to the same height as the rear wheels (Figure 16).

Note: To raise the machine, move the front cutting-height levers rearward and the rear cutting-height levers forward. To lower the machine, move the front cutting-height levers forward and the rear cutting-height levers rearward.

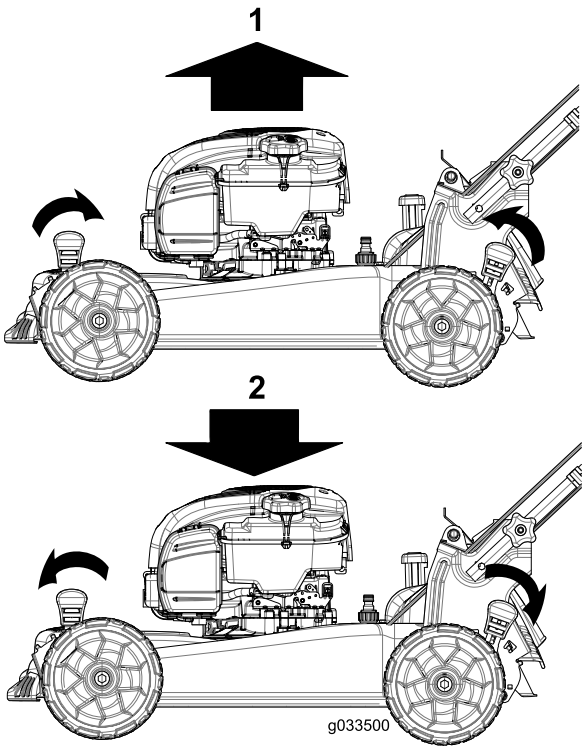

Figure 16

1. Raise the machine
2. Lower the machine

Note: The cutting height settings are 25 mm (1 inch); 35 mm (1-3/8 inches); 44 mm (1-3/4 inches); 54 mm (2-1/8 inches); 64 mm (2-1/2 inches); 73 mm (2-7/8 inches); 83 mm (3-1/4 inches); 92 mm (3-5/8 inches); and 102 mm (4 inches).

During Operation

During Operating Safety

General Safety

- Wear appropriate clothing, including eye protection; slip-resistant, substantial footwear; and hearing protection. Tie back long hair, secure loose clothing, and do not wear jewelry.
- Do not operate the machine while ill, tired, or under the influence of alcohol or drugs.
- The blade is sharp; contacting the blade can result in serious personal injury. Shut off the engine and wait for all moving parts to stop before leaving the operating position.
- When you release the blade-control bar, the engine should shut off and the blade should stop within 3 seconds. If not, stop using your machine immediately and contact an Authorized Service Dealer.
- Operate the machine only in good visibility and appropriate weather conditions. Do not operate the machine when there is the risk of lighting.

- Wet grass or leaves can cause serious injury if you slip and contact the blade. Mow only in dry conditions.
- Use extreme care when approaching blind corners, shrubs, trees, or other objects that may block your view.
- Watch for holes, ruts, bumps, rocks, or other hidden objects. Uneven terrain could cause a slip-and-fall accident.
- Stop the machine and inspect the blades after striking an object or if there is an abnormal vibration in the machine. Make all necessary repairs before resuming operation.
- Before leaving the operating position, shut off the engine, remove the key, and wait for all moving parts to stop.
- If the engine has been running the muffler will be hot and can severely burn you. Keep away from the hot muffler.
- Check the grass catcher components and the discharge guard frequently and replace them with the manufacturer's recommended parts when necessary.
- Use accessories and attachments approved by the The Toro® Company only.

Slope Safety

- Mow across the face of slopes; never up and down. Use extreme caution when changing direction on slopes.
- Do not mow on excessively steep slopes. Poor footing could cause a slip-and-fall accident.
- Do not mow near drop-offs, ditches, or embankments. You could lose your footing or balance.

Starting the Engine

1. Hold the blade-control bar against the handle (Figure 17).

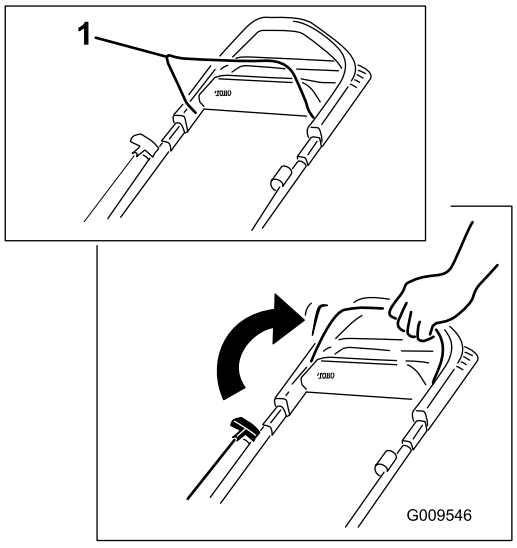

Figure 17

1. Blade-control bar

2. Pull the recoil-start handle (Figure 18).

   Note: When you pull the recoil-start handle, pull it lightly until you feel resistance, then pull it sharply (Figure 18). Allow the rope to return to the handle slowly.

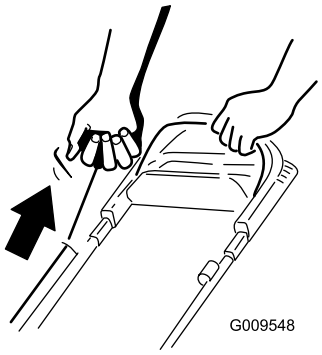

Figure 18

Note: If the machine does not start after several attempts, contact an Authorized Service Dealer.

Using the Self-Propel Drive

To operate the self-propel drive, simply walk with your hands on the upper handle and your elbows at your sides, and the machine will automatically keep pace with you (Figure 19).

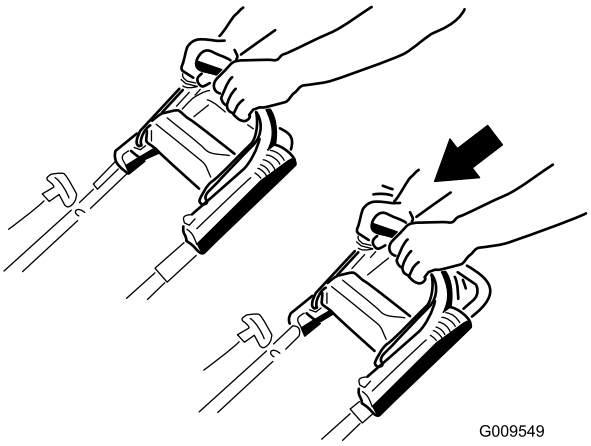

Figure 19

Note: If the machine does not freely roll backward after self-propelling, stop walking, hold your hands in place, and allow the machine to roll a couple of centimeters (inches) forward to disengage the wheel drive. You can also try reaching just under the upper handle to the metal handle and push the machine forward a couple of centimeters (inches). If the machine still does not roll backward easily, contact an Authorized Service Dealer.

Using the Traction-Assist Handle

The traction-assist handle (Figure 20) allows you to use your hands to control the speed of the machine instead of your walking speed. This is helpful for turning tight corners and going up hills, where you want the machine to move but cannot move yourself. It is also useful for mowing at maximum speed.

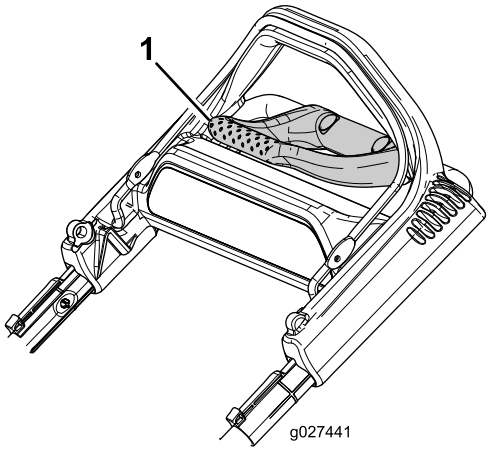

Figure 20

1. Traction-assist handle

1. Reach forward with your fingertips and grasp the corners of the traction-assist handle (Figure 21).

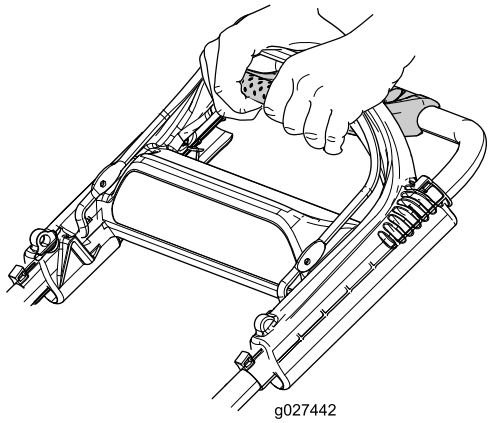

Figure 21

2. Squeeze the 2 handles together until the machine achieves your desired ground speed.
3. Release the traction-assist handle when you no longer need it.

   Important: The machine will continue to self-propel until you release the traction-assist handle and stop walking.

Stopping the Engine

To stop the engine, release the blade-control bar.

Important: When you release the blade-control bar, both the engine and blade should stop within 3 seconds. If they do not stop properly, stop using your machine immediately and contact an Authorized Service Dealer.

Recycling the Clippings

Your machine comes from the factory ready to recycle the grass and leaf clippings back into the lawn.

If the grass bag is on the machine and the bag-on-demand lever is in the bagging position, move the lever to the recycling position; refer to Operating the Bag-on-Demand Lever (page 12) before recycling the clippings. If the side-discharge chute is on the machine, remove it; refer to Removing the Side-Discharge Chute (page 13) before recycling the clippings.

Bagging the Clippings

Use the grass bag when you want to collect grass and leaf clippings from the lawn.

If the side-discharge chute is on the machine, remove it; refer to Removing the Side-Discharge Chute (page 13) before bagging the clippings. If the bag-on-demand lever is in the recycling position, move it to the bagging position; refer to Operating the Bag-on-Demand Lever (page 12).

⚠ WARNING

The blade is sharp; contacting the blade can result in serious personal injury.

Stop the engine and wait for all moving parts to stop before leaving the operating position.

Installing the Grass Bag

1. Raise and hold up the rear deflector (Figure 22).

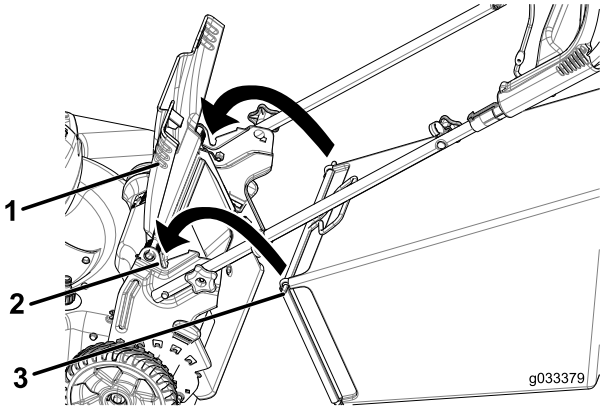

Figure 22

1. Rear deflector
2. Notches (2)
3. Grass bag pin (2)

2. Install the grass bag, ensuring that the pins on the bag rest in the notches on the handle (Figure 22).
3. Lower the rear deflector.

Removing the Grass Bag

To remove the bag, reverse the steps above.

Operating the Bag-on-Demand Lever

The bag-on-demand feature allows you to either collect or recycle grass and leaf clippings while the grass bag is attached to the machine.

- For bagging the grass and leaf clippings, press the button on the bag-on-demand lever, and move the lever forward until the button on the lever pops up (Figure 23).

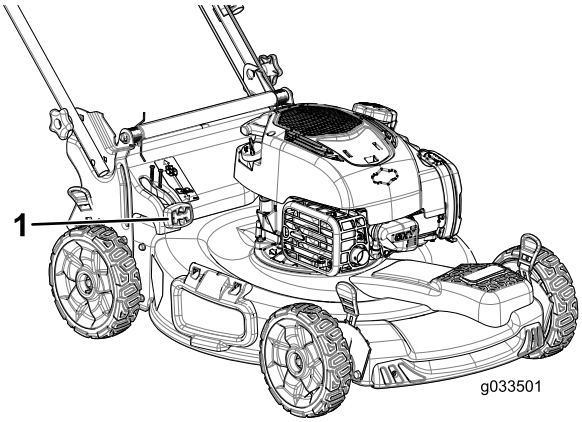

Figure 23

1. Bag-on-demand lever (in bagging position)

- For recycling the grass and leaf clippings, press the button on the lever and move the lever rearward until the button on the lever pops up.

Important: For proper operation, remove any grass clippings and debris from the bag-on-demand door and the surrounding opening (Figure 24) before you move the bag-on-demand lever from one position to another.

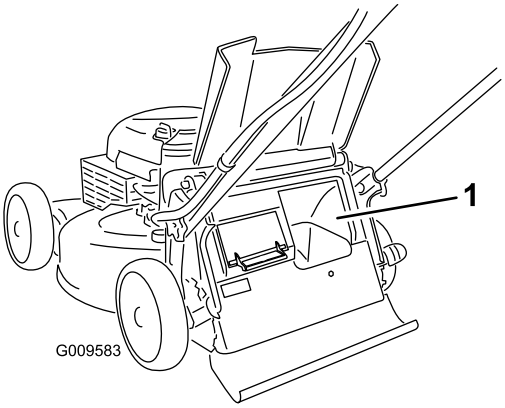

Figure 24

1. Clean here

Side-Discharging the Clippings

Use the side discharge for cutting very tall grass.

If the grass bag is on the machine and the bag-on-demand lever is in the bagging position, move the lever to the recycling position; refer to Operating the Bag-on-Demand Lever (page 12).

Installing the Side-Discharge Chute

Lift up the side deflector and install the side-discharge chute (Figure 25).

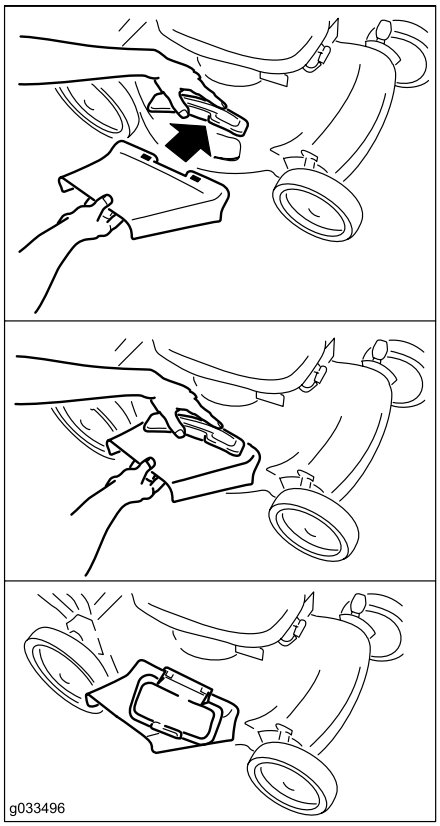

Figure 25

Removing the Side-Discharge Chute

To remove the side-discharge chute, lift up the side deflector, remove the side-discharge chute, and lower the side-discharge deflector.

Operating Tips

General Mowing Tips

- Clear the area of sticks, stones, wire, branches, and other debris that the blade could hit.
- Avoid striking solid objects with the blade. Never deliberately mow over any object.
- If the machine strikes an object or starts to vibrate, immediately stop the engine, disconnect the wire from the spark plug, and examine the machine for damage.
- For best performance, install a new blade before the cutting season begins.
- Replace the blade when necessary with a Toro replacement blade.

Cutting Grass

- Cut only about a third of the grass blade at a time. Do not cut below the 54 mm (2-1/8 inch) setting unless the grass is sparse or it is late fall when grass growth begins to slow down. Refer to Adjusting the Cutting Height (page 9).
- When cutting grass over 15 cm (6 inches) tall, mow at the highest cutting height setting and walk slower; then mow again at a lower setting for the best lawn appearance. If the grass is too long, the machine may plug and cause the engine to stall.
- Mow only dry grass or leaves. Wet grass and leaves tend to clump on the yard and can cause the machine to plug or the engine to stall.
- Be aware of a potential fire hazard in very dry conditions, follow all local fire warnings, and keep the machine free of dry grass and leaf debris.
- Alternate the mowing direction. This helps disperse the clippings over the lawn for even fertilization.
- If the finished lawn appearance is unsatisfactory, try 1 or more of the following:
  - Replace the blade or have it sharpened.
  - Walk at a slower pace while mowing.
  - Raise the cutting height on your machine.
  - Cut the grass more frequently.
  - Overlap cutting swaths instead of cutting a full swath with each pass.
  - Set the cutting height on the front wheels a notch lower than the rear wheels. For example, set the front wheels at 54 mm (2-1/8 inches) and the rear wheels at 64 mm (2-1/2 inches).

Cutting Leaves

- After cutting the lawn, ensure that half of the lawn shows through the cut leaf cover. You may need to make more than a single pass over the leaves.
- If there are more than 13 cm (5 inches) of leaves on the lawn, set the front cutting height 1 or 2 notches higher than the rear cutting height.
- Slow down your mowing speed if the machine does not cut the leaves finely enough.

After Operation

After Operating Safety

General Safety

- Clean grass and debris from the machine to help prevent fires. Clean up oil or fuel spills.
- Allow the engine to cool before storing the machine in any enclosure.
- Never store the machine or fuel container where there is an open flame, spark, or pilot light, such as on a water heater or on other appliances.

Hauling Safety

- Use care when loading or unloading the machine into a trailer or truck.
- Use full-width ramps for loading the machine into a trailer or truck. Do not exceed a 15° angle between the ramp and the trailer or truck.
- Tie the machine down securely using straps, chains, cable, or ropes. Both front and rear straps should be directed down and outward from the machine.

Cleaning under the Machine

Service Interval: Before each use or daily

⚠ WARNING

The machine may dislodge material from under the machine.

- **Wear eye protection.**
- **Stay in the operating position (behind the handle) when the engine is running.**
- **Do not allow bystanders in the area.**

For best results, clean under the machine housing soon after you have completed mowing.

1. Lower the machine to its lowest cutting-height setting; refer to Adjusting the Cutting Height (page 9).
2. Move the machine onto a flat paved surface.
3. Wash out the area under the rear deflector where the clippings go from the underside of the machine to the grass bag.

   Note: Wash out the area with the bag-on-demand in both the fully forward and fully rearward positions.
4. Attach a garden hose that is connected to a water supply to the washout port on the machine (Figure 26).

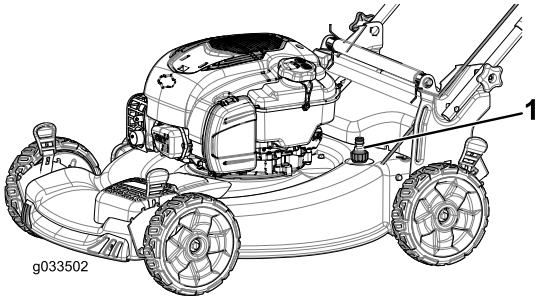

Figure 26

1. Washout port

5. Turn the water on.
6. Start the engine and run it until no more clippings come out from under the machine.
7. Stop the engine.
8. Shut off the water and disconnect the garden hose from the machine.
9. Start the engine and run it for a few minutes to dry the underside of the machine to prevent it from rusting.
10. Allow the engine to cool before storing the machine in an enclosed area.

Folding the Handle

⚠ WARNING

Folding or unfolding the handle improperly can damage the cables, causing an unsafe operating condition.

- **Do not damage the cables when folding or unfolding the handle.**
- **If a cable is damaged, contact an Authorized Service Dealer.**

1. Remove and save the 2 handle knobs and 2 carriage bolts from the handle brackets (Figure 27).

   Important: Route the cables to the outside of the handle knobs as you fold the handle.

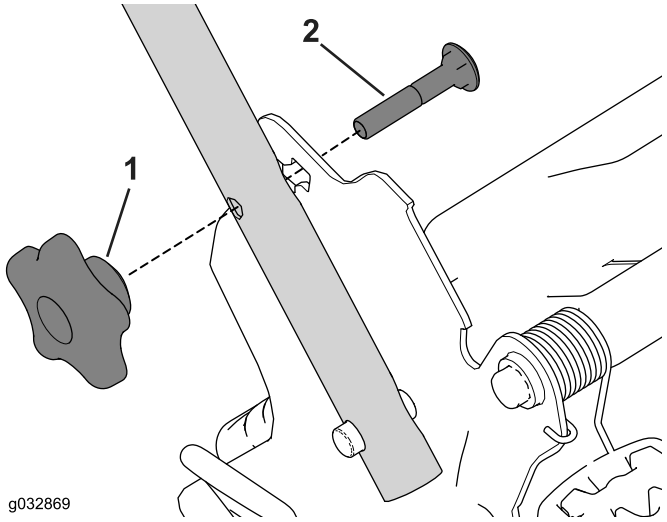

Figure 27

1. Handle knob
2. Carriage bolt

2. Fold the handle by rotating it forward (Figure 28).

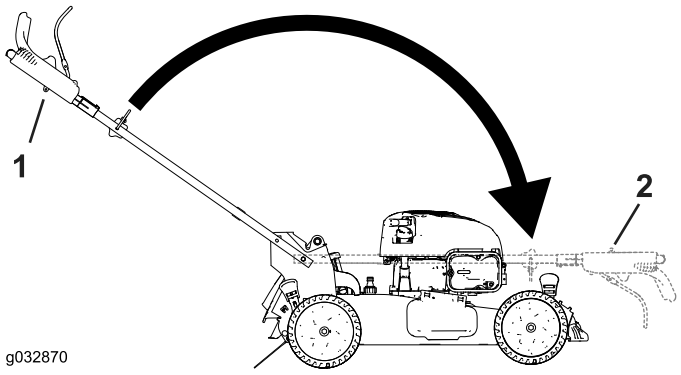

Figure 28

1. Operating position
2. Folded position

3. Insert the carriage bolt (with the bolt head toward the inside) through the handle bracket and the upper hole in the handle end. Ensure that the square edges of each carriage bolt fits into the upper or lower square hole in its related handle bracket (Figure 29).

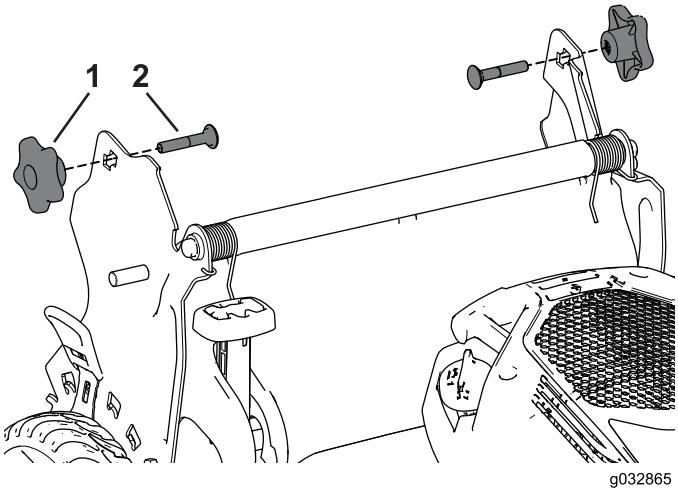

Figure 29

1. Handle knob
2. Carriage bolt

4. Loosely install the handle knobs and carriage bolts on the handle brackets.
5. To unfold the handle, refer to 1 Assembling and Unfolding the Handle (page 4).

Maintenance

Note: Determine the left and right sides of the machine from the normal operating position.

Recommended Maintenance Schedule(s)

Maintenance Service Interval	Maintenance Procedure
After the first 5 hours	• Change the engine oil.
Before each use or daily	• Check the engine oil level. • Ensure that the engine stops within 3 seconds after releasing the blade-control bar. • Clean grass clippings and dirt from under the machine.
Every 25 hours	• Replace the air filter; replace it more frequently in dusty operating conditions.
Before storage	• Empty the fuel tank before repairs as directed and before annual storage.
Yearly	• Clean the air-cooling system; clean it more frequently in dusty operating conditions. Refer to your engine owner's manual. • Change the engine oil. • Replace the blade or have it sharpened (more frequently if the edge dulls quickly). • Refer to your engine owner's manual for any additional yearly maintenance procedures.

Important: **Refer to your engine owner's manual for additional maintenance procedures.**

Note: Replacement parts are available from an Authorized Service Dealer (go to www.toro.com to find the nearest dealer) or at www.shoptoro.com.

Preparing for Maintenance

1. Stop the engine and wait for all moving parts to stop.
2. Disconnect the spark-plug wire from the spark plug (Figure 30) before performing any maintenance procedure.

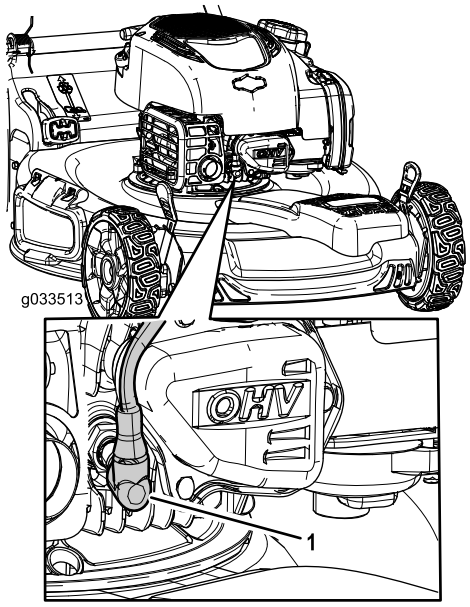

Figure 30

3. After performing the maintenance procedure(s), connect the spark-plug wire to the spark plug.

Important: **Before tipping the machine to change the oil or replace the blade, allow the fuel tank to run dry through normal usage. If you must tip the machine prior to running out of fuel, use a hand fuel pump to remove the fuel. Always tip the machine onto its side, with the air filter up.**

Replacing the Air Filter

Service Interval: Every 25 hours

1. Upclip the top of the air-filter cover (Figure 31).

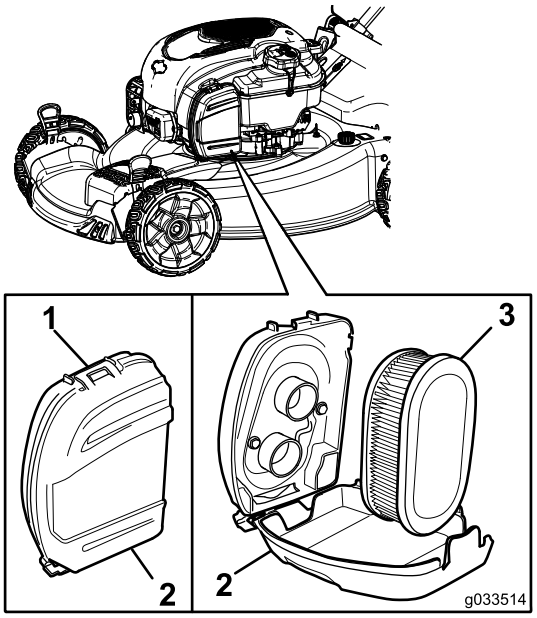

Figure 31

1. Clip
2. Air-filter cover
3. Air filter

2. Remove the air filter (Figure 31).
3. Inspect the air filter.

   Note: If the air filter is excessively dirty, replace it with a new filter. Otherwise, gently tap the air filter on a hard surface to loosen debris.
4. Install the air filter.
5. Use the clip to install the air-filter cover.

Changing the Engine Oil

Service Interval: After the first 5 hours

Yearly

Note: Max. fill: 0.53 L (18 oz), type: SAE 30 detergent oil with an API service classification of SF, SG, SH, SJ, SL, or higher.

1. Move the machine to a level surface.
2. Ensure that the fuel tank contains little or no fuel so that fuel does not leak out when you tip the machine onto its side.
3. Run the engine a few minutes before changing the oil to warm it.

   Note: Warm oil flows better and carries more contaminants.
4. Disconnect the wire from the spark plug; refer to Preparing for Maintenance (page 16).
5. Place an oil drain pan beside the machine on the side nearest to the oil-fill tube.
6. Remove the dipstick from the oil-fill tube (Figure 32).

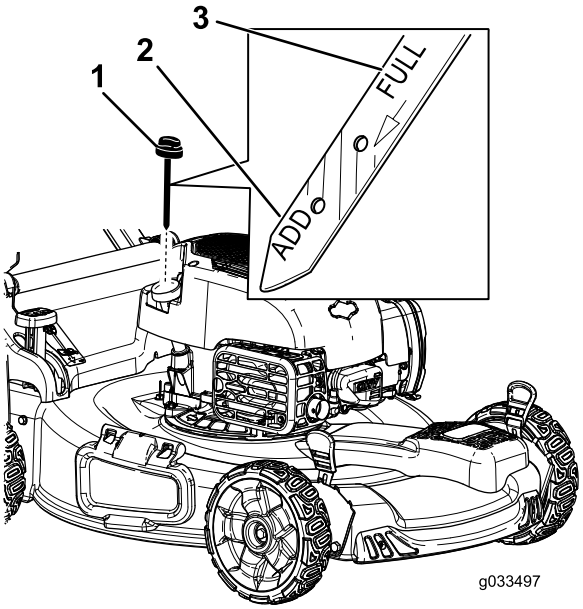

Figure 32

1. Dipstick

7. Tip the machine onto its side, with the oil-fill tube down, to drain the used oil through the oil-fill tube into the oil-drain pan (Figure 33).

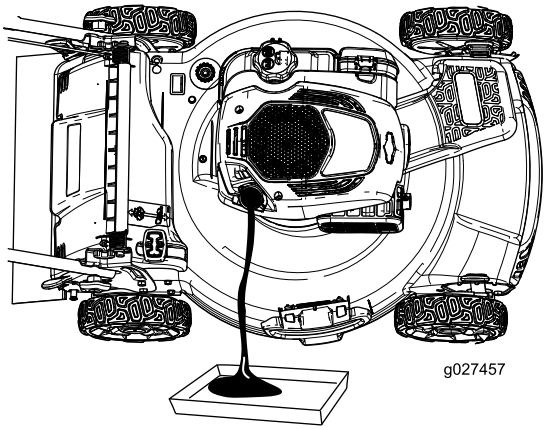

Figure 33

8. After draining the used oil, return the machine to the operating position.
9. Pour about 3/4 of the crankcase capacity of oil in the crankcase.

   Note: Max. fill: 0.59 L (20 oz), type: SAE 30 detergent oil with an API service classification of SF, SG, SH, SJ, SL, or higher.
10. Wait 3 minutes for the oil to settle.
11. Wipe the dipstick clean with a clean cloth.
12. Insert the dipstick fully into the oil-fill tube.

13. Remove the dipstick and read the oil level on the dipstick.
    - If the oil is below the **Add** mark on the dipstick, slowly pour a small amount of oil into the oil-fill tube, wait 3 minutes, and then repeat steps 11 through 13 until the oil level is at the **Full** mark on the dipstick.
    - If the oil is above the **Full** mark on the dipstick, drain the excess oil until the oil level is at the **Full** mark on the dipstick.

    Important: If the oil level in the crankcase is too low or too high and you run the engine, you may damage the engine.
14. Install the dipstick into the oil-fill tube securely.
15. Dispose of the used oil properly at a local recycling center.

Replacing the Blade

Service Interval: Yearly

Important: *You will need a torque wrench to install the blade properly.* If you do not have a torque wrench or are uncomfortable performing this procedure, contact an Authorized Service Dealer.

Examine the blade whenever you run out of gasoline. If the blade is damaged or cracked, replace it immediately. If the blade edge is dull or nicked, have it sharpened and balanced, or replace it.

1. Refer to Preparing for Maintenance (page 16).
2. Tip the machine onto its side with the air filter up.
3. Use a block of wood to hold the blade steady (Figure 34).

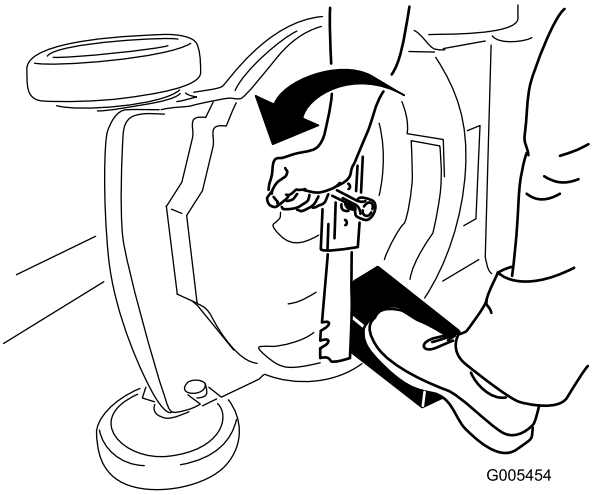

Figure 34

4. Remove the blade, saving all mounting hardware (Figure 34).
5. Install the new blade and all mounting hardware (Figure 35).

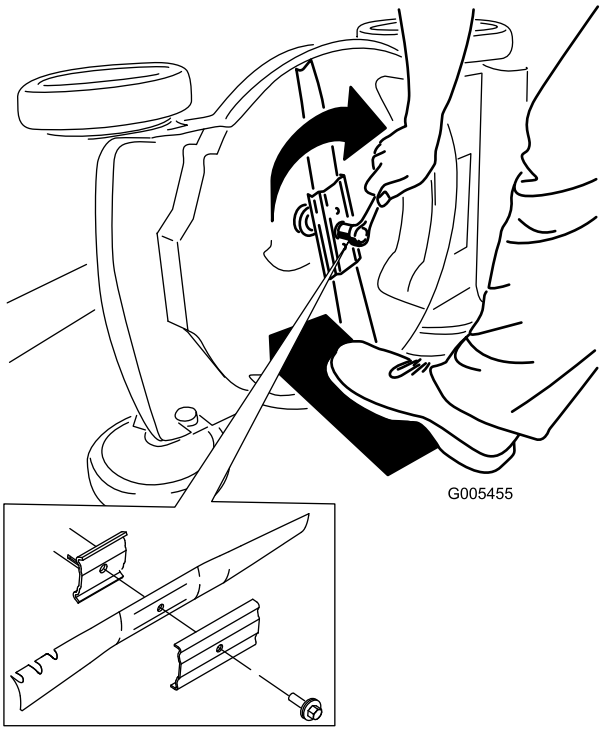

Figure 35

Important: Position the curved ends of the blade to point toward the machine housing.

6. Use a torque wrench to tighten the blade bolt to 82 N-m (60 ft-lb).

Important: A bolt torqued to 82 N-m (60 ft-lb) is very tight. While holding the blade with a block of wood, put your weight behind the ratchet or wrench and tighten the bolt securely. This bolt is very difficult to overtighten.

Adjusting the Self-Propel Drive

Whenever you install new self-propel cables or if the self-propel drive is out of adjustment, adjust the self-propel drive.

1. Turn the adjustment knob counterclockwise to loosen the cable adjustment (Figure 36).

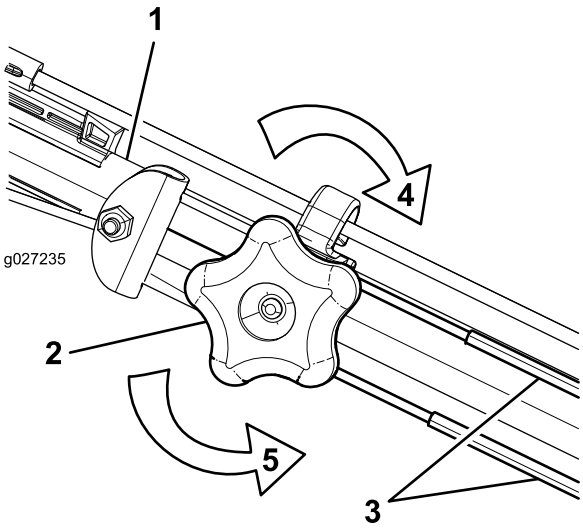

Figure 36

1. Handle (left side)
2. Adjustment knob
3. Self-propel-drive cables
4. Turn the knob clockwise to tighten the adjustment.
5. Turn the knob counterclockwise to loosen the adjustment.

2. Adjust the tension on the cables (Figure 36) by pulling them back or pushing them forward and then holding them in that position.

   Note: Push the cables toward the engine to increase the traction; pull the cables away from the engine to decrease the traction.

   Note: For best performance, adjust the cables to the same length.

3. Turn the adjustment knob clockwise to tighten the adjustment of the cables.

Storage

Store the machine in a cool, clean, dry place.

Preparing the Machine for Storage

⚠ WARNING

Gasoline vapors can explode.

- **Do not store gasoline more than 30 days.**
- **Do not store the machine in an enclosure near an open flame.**
- **Allow the engine to cool before storing it.**

1. On the last refueling of the year, add fuel stabilizer to the fuel as directed by the engine manufacturer.
2. Dispose of any unused fuel properly. Recycle it according to local codes, or use it in your automobile.

   Note: Old fuel in the fuel tank is the leading cause of hard starting. Do not store fuel without stabilizer more than 30 days, and do not store stabilized fuel more than 90 days.
3. Run the machine until the engine stops from running out of fuel.
4. Start the engine again.
5. Allow the engine to run until it stops. When you can no longer start the engine, it is sufficiently dry.
6. Disconnect the wire from the spark plug.
7. Remove the spark plug, add 30 ml (1 oz) of oil through the spark plug hole, and pull the starter rope slowly several times to distribute oil throughout the cylinder to prevent cylinder corrosion during the off-season.
8. Loosely install the spark plug.
9. Tighten all nuts, bolts, and screws.

Removing the Machine from Storage

1. Check and tighten all fasteners.
2. Remove the spark plug and spin the engine rapidly using the starter to blow excess oil from the cylinder.
3. Install the spark plug and tighten it with a torque wrench to 15 ft-lb (20 N-m).
4. Perform any needed maintenance procedures; refer to Maintenance (page 16).
5. Check the engine oil level; refer to Checking the Engine-Oil Level (page 8).
6. Fuel the fuel tank with fresh gasoline; refer to Filling the Fuel Tank (page 8).
7. Connect the wire to the spark plug.

Notes:

Notes:

International Distributor List

Distributor:	Country:	Phone Number:	Distributor:	Country:	Phone Number:
Agrolanc Kft	Hungary	36 27 539 640	Maquiver S.A.	Colombia	57 1 236 4079
Asian American Industrial (AAI)	Hong Kong	852 2497 7804	Maruyama Mfg. Co. Inc.	Japan	81 3 3252 2285
B-Ray Corporation	Korea	82 32 551 2076	Mountfield a.s.	Czech Republic	420 255 704 220
Brisa Goods LLC	Mexico	1 210 495 2417	Mountfield a.s.	Slovakia	420 255 704 220
Casco Sales Company	Puerto Rico	787 788 8383	Munditol S.A.	Argentina	54 11 4 821 9999
Ceres S.A.	Costa Rica	506 239 1138	Norma Garden	Russia	7 495 411 61 20
CSSC Turf Equipment (pvt) Ltd.	Sri Lanka	94 11 2746100	Oslinger Turf Equipment SA	Ecuador	593 4 239 6970
Cyril Johnston & Co.	Northern Ireland	44 2890 813 121	Oy Hako Ground and Garden Ab	Finland	358 987 00733
Cyril Johnston & Co.	Republic of Ireland	44 2890 813 121	Parkland Products Ltd.	New Zealand	64 3 34 93760
Fat Dragon	China	886 10 80841322	Perfetto	Poland	48 61 8 208 416
Femco S.A.	Guatemala	502 442 3277	Pratoverde SRL.	Italy	39 049 9128 128
FIVEMANS New-Tech Co., Ltd	China	86-10-6381 6136	Prochaska & Cie	Austria	43 1 278 5100
ForGarder OU	Estonia	372 384 6060	RT Cohen 2004 Ltd.	Israel	972 986 17979
G.Y.K. Company Ltd.	Japan	81 726 325 861	Riversa	Spain	34 9 52 83 7500
Geomechaniki of Athens	Greece	30 10 935 0054	Lely Turfcare	Denmark	45 66 109 200
Golf international Turizm	Turkey	90 216 336 5993	Lely (U.K.) Limited	United Kingdom	44 1480 226 800
Hako Ground and Garden	Sweden	46 35 10 0000	Solvert S.A.S.	France	33 1 30 81 77 00
Hako Ground and Garden	Norway	47 22 90 7760	Spypros Stavrinides Limited	Cyprus	357 22 434131
Hayter Limited (U.K.)	United Kingdom	44 1279 723 444	Surge Systems India Limited	India	91 1 292299901
Hydroturf Int. Co Dubai	United Arab Emirates	97 14 347 9479	T-Markt Logistics Ltd.	Hungary	36 26 525 500
Hydroturf Egypt LLC	Egypt	202 519 4308	Toro Australia	Australia	61 3 9580 7355
Irrimac	Portugal	351 21 238 8260	Toro Europe NV	Belgium	32 14 562 960
Irrigation Products Int'l Pvt Ltd.	India	0091 44 2449 4387	Valtech	Morocco	212 5 3766 3636
Jean Heybroek b.v.	Netherlands	31 30 639 4611	Victus Emak	Poland	48 61 823 8369

European Privacy Notice

The Information Toro Collects
Toro Warranty Company (Toro) respects your privacy. In order to process your warranty claim and contact you in the event of a product recall, we ask you to share certain personal information with us, either directly or through your local Toro company or dealer.

The Toro warranty system is hosted on servers located within the United States where privacy law may not provide the same protection as applies in your country.

BY SHARING YOUR PERSONAL INFORMATION WITH US, YOU ARE CONSENTING TO THE PROCESSING OF YOUR PERSONAL INFORMATION AS DESCRIBED IN THIS PRIVACY NOTICE.

The Way Toro Uses Information
Toro may use your personal information to process warranty claims, to contact you in the event of a product recall and for any other purpose which we tell you about. Toro may share your information with Toro's affiliates, dealers or other business partners in connection with any of these activities. We will not sell your personal information to any other company. We reserve the right to disclose personal information in order to comply with applicable laws and with requests by the appropriate authorities, to operate our systems properly or for our own protection or that of other users.

Retention of your Personal Information
We will keep your personal information as long as we need it for the purposes for which it was originally collected or for other legitimate purposes (such as regulatory compliance), or as required by applicable law.

Toro's Commitment to Security of Your Personal Information
We take reasonable precautions in order to protect the security of your personal information. We also take steps to maintain the accuracy and current status of personal information.

Access and Correction of your Personal Information
If you would like to review or correct your personal information, please contact us by email at legal@toro.com.

Australian Consumer Law

Australian customers will find details relating to the Australian Consumer Law either inside the box or at your local Toro Dealer.

The Toro Warranty and The Toro GTS Starting Guarantee

Conditions and Products Covered

The Toro Company and its affiliate, Toro Warranty Company, pursuant to an agreement between them, jointly promise to repair for the original purchaser[1] the Toro Product listed below if defective in materials or workmanship or if the Toro GTS (Guaranteed to Start) engine will not start on the first or second pull, provided the routine maintenance required in the *Operator's Manual* have been performed.

The following time periods apply from the date of purchase:

Products	Warranty Period
Walk Power Mowers	
• Cast Deck	5 years Residential Use[2] 90 Days Commercial Use
• Engine	5 years GTS Guarantee, Residential Use[3]
• Battery	2 years
• Steel Deck	2 years Residential Use[2] 30 Days Commercial Use
• Engine	2 years GTS Guarantee, Residential Use[3]
TimeMaster Mowers	3 years Residential Use[2] 90 Days Commercial Use
• Engine	3 years GTS Guarantee, Residential Use[3]
• Battery	2 years
Electric Hand Held Products and Walk Power Mowers	2 years Residential Use[2] No Warranty for Commercial Use
Snowthrowers	
• Single Stage	2 years Residential Use[2] 45 Days Commercial Use
• Engine	2 years GTS Guarantee, Residential Use[3]
• Two Stage	3 years Residential Use[2] 45 Days Commercial Use
• Chute, chute deflector and impeller housing cover	Lifetime (original owner only)[5]
Electric Snowthrowers	2 years Residential Use[2] No Warranty for Commercial Use
All Ride-On Units Below	
• Engine	See engine manufacturer's warranty[4]
• Battery	2 years Residential Use[2]
• Attachments	2 years Residential Use[2]
DH Lawn & Garden Tractors	2 years Residential Use[2] 30 Days Commercial Use
XLS Lawn & Garden Tractors	3 years Residential Use[2] 30 Days Commercial Use
TimeCutter	3 years Residential Use[2] 30 Days Commercial Use
TITAN Mowers	3 years or 240 hours[5]
• Frame	Lifetime (original owner only)[6]

[1]Original Purchaser means the person who originally purchased the Toro Product.

[2]Residential use means use of the product on the same lot as your home. Use at more than one location is considered commercial use and the commercial use warranty would apply.

[3]The Toro GTS Starting Guarantee does not apply when the product is used commercially.

[4]Some engines used on Toro Products are warranted by the engine manufacturer.

[5]Whichever occurs first.

[6]Lifetime Frame Warranty - If the main frame, consisting of the parts welded together to form the tractor structure that other components such as the engine are secured to, cracks or breaks in normal use, it will be repaired or replaced, at Toro's option, under warranty at no cost for parts and labor. Frame failure due to misuse or abuse and failure or repair required due to rust or corrosion are not covered.

Warranty may be denied if the hour meter is disconnected, altered, or shows signs of being tampered with.

Owner Responsibilities

You must maintain your Toro Product by following the maintenance procedures described in the *Operator's Manual*. Such routine maintenance, whether performed by a dealer or by you, is at your expense.

Instructions for Obtaining Warranty Service

If you think that your Toro Product contains a defect in materials or workmanship, follow this procedure:

1. Contact your seller to arrange service of the product. If for any reason it is impossible for you to contact your seller, you may contact any Toro Authorized Distributor to arrange service. See attached Distributor List.
2. Bring the product and your proof of purchase (sales receipt) to the servicing outlet. If for any reason you are dissatisfied with the servicing outlet's analysis or with the assistance provided, contact us at:

   Toro Customer Care Department, RLC Division
   Toro Warranty Company
   8111 Lyndale Avenue South
   Bloomington, MN 55420-1196
   001–952–948–4707

Items and Conditions Not Covered

There is no other express warranty except for special emission system coverage and engine warranty coverage on some products. This express warranty does not cover the following:

- Cost of regular maintenance service or parts, such as filters, fuel, lubricants, oil changes, spark plugs, air filters blade sharpening or worn blades, cable/linkage adjustments, or brake and clutch adjustments
- Components failing due to normal wear
- Any product or part which has been altered or misused or neglected and requires replacement or repair due to accidents or lack of proper maintenance
- Pickup and delivery charges
- Repairs or attempted repairs by anyone other than an Authorized Toro Service Dealer
- Repairs necessary due to failure to follow recommended fuel procedure (consult *Operator's Manual* for more details)
  - Removing contaminants from the fuel system is not covered
  - Use of old fuel (more than one month old) or fuel which contains more than 10% ethanol or more that 15% MTBE
  - Failure to drain the fuel system prior to any period of non-use over one month
- Repairs or adjustments to correct starting difficulties due to the following:
  - Failure to follow proper maintenance procedures or recommended fuel procedure
  - Rotary mower blade striking an object
- Special operational conditions where starting may require more than two pulls:
  - First time starts after extended period of non-use over three months or seasonal storage
  - Cool temperature starts such as those found in early spring and late autumn
  - Improper starting procedures - if you are having difficulty starting your unit, please check the *Operator's Manual* to ensure that you are using the correct starting procedures. This can save an unnecessary visit to an Authorized Toro Service Dealer.

General Conditions

The purchaser is covered by the national laws of each country. The rights to which the purchaser is entitled with the support of these laws are not restricted by this warranty.